This service manuals covers most of the 2009/2010 Ski-Doo snowmobile line.

Per BRP the 2009 and 2010 models in this manual are the same, so they did not release a separate 2010 manual.

This manual is fully searchable, just hold down the control key and the F key to search on any word.

If you bought this manual from any other seller, they are reselling my work.

Please leave them negative feedback & email me at sales@midwestmanuals.com .

Our goal is to be one of the BEST sellers on eBay and the internet by providing you with the BEST customer service and the BEST manuals on the market.

Thank you for choosing us.



sales@midwestmanuals.com

www.midwestmanuals.com

www.midwestmanuals.com

TABLE OF CONTENTS

SAFETY NOTICE X

INTRODUCTION XI
- GENERAL XI
- HOW TO IDENTIFY YOUR VEHICLE XII
- SNOWMOBILE LIFTING XII
- ENGINE EMISSIONS INFORMATION XIII
- TIGHTENING TORQUE XIV
- SELF-LOCKING FASTENERS PROCEDURE XV
- LOCTITE APPLICATION PROCEDURE XV
- MANUAL INFORMATION XVIII

01 MAINTENANCE
- **01 – MAINTENANCE CHART** 1
- **02 – STORAGE PROCEDURE** 3
  - GENERAL 3
  - PROCEDURES 3
    - ENGINE MANAGEMENT SYSTEM 3
    - FUEL SYSTEM 3
    - ENGINE 3
    - ELECTRICAL SYSTEM 5
    - DRIVE/BRAKE SYSTEM 5
    - CHASSIS 5
    - VEHICLE 6
- **03 – PRESEASON PREPARATION** 7
  - GENERAL 7
  - PROCEDURES 7
    - ENGINE 7
    - FUEL SYSTEM 7
    - ELECTRICAL SYSTEM 8
    - DRIVE/BRAKE SYSTEM 8

02 ENGINE
- **01 – ENGINE REMOVAL AND INSTALLATION** 9
  - GENERAL 12
  - PROCEDURES 12
    - ENGINE 12
    - ENGINE STOPPER 23
    - ENGINE SUPPORT 24
    - ENGINE RUBBER MOUNT 25
- **02 – ENGINE LEAK TEST** 27
  - TROUBLESHOOTING 28
  - PROCEDURES 29
    - ENGINE 29
    - PUMP SHAFT OIL GEAR RESERVOIR 30
- **03 – ENGINE MEASUREMENT** 33
  - PROCEDURES 33
    - CYLINDER HEAD WARPAGE 33
    - CYLINDER TAPER 33
    - CYLINDER OUT OF ROUND 33
    - CYLINDER/PISTON CLEARANCE 34
    - RING/PISTON GROOVE CLEARANCE 35
    - RING END GAP 36
    - CRANKSHAFT DEFLECTION 36
    - CONNECTING ROD BIG END AXIAL PLAY 37

www.midwestmanuals.com

TABLE OF CONTENTS

02 ENGINE (cont'd)

03 – ENGINE MEASUREMENT (cont'd)

PROCEDURES (cont'd)

CRANKSHAFT ALIGNMENT 37

COMBUSTION CHAMBER VOLUME MEASUREMENT 38

04 – AIR INTAKE SYSTEM 41

GENERAL 43

PROCEDURES 43

AIR FILTER 43

PRIMARY AIR INTAKE SILENCER 44

SECONDARY AIR INTAKE SILENCER 44

05 – EXHAUST SYSTEM 49

GENERAL 51

PROCEDURES 51

MUFFLER 51

EXHAUST GAS TEMPERATURE SENSOR (EGTS) 51

TUNED PIPE 51

MANIFOLD 52

06 – REWIND STARTER 53

INSPECTION 55

PROCEDURES 55

REWIND STARTER HANDLE 55

REWIND STARTER 55

07 – LUBRICATION SYSTEM 61

GENERAL 65

SYSTEM DESCRIPTION 65

RECOMMENDED OIL 66

INSPECTION 66

OIL SYSTEM LEAK TEST 66

TROUBLESHOOTING 68

PROCEDURES 68

OIL INJECTION PUMP (500SS/600/800R) 68

OIL PUMP (600 HO E-TEC) 71

OIL TANK 75

OIL LEVEL SENSOR 77

OIL FILTER (500SS/600/800R) 78

INJECTION NOZZLE 78

08 – COOLING SYSTEM 81

GENERAL 83

MAINTENANCE 83

COOLANT REPLACEMENT 83

INSPECTION 85

COOLING SYSTEM LEAK TEST 85

ENGINE COOLING SYSTEM LEAK TEST (800R) 85

PROCEDURES 86

THERMOSTAT 86

RADIATOR CAP 87

FRONT RADIATOR 87

REAR RADIATOR 88

COOLANT RESERVOIR 89

WATER PUMP 89

COOLANT TEMPERATURE SENSOR (CTS) 89

09 – MAGNETO SYSTEM 93

GENERAL 96

www.midwestmanuals.com

02 ENGINE (cont'd)
09 – MAGNETO SYSTEM (cont'd)
PROCEDURES 96
MAGNETO FLYWHEEL 96
STATOR (500SS/600/800R) 98
STATOR (600 HO E-TEC) 100
CRANKSHAFT POSITION SENSOR (600 HO E-TEC) 103
TRIGGER COILS (500SS/600) 103
TRIGGER COILS (800R) 103
MAGNETO HOUSING (800R) 104
10 – RAVE (593) 107
GENERAL 109
SYSTEM DESCRIPTION 109
PROCEDURES 109
RAVE VALVES 109
11 – RAVE (593 E-TEC) 113
GENERAL 115
SYSTEM DESCRIPTION 115
INSPECTION 116
3D RAVE VALVES POSITION VALIDATION 116
TROUBLESHOOTING 116
DIAGNOSTIC TIPS 116
PROCEDURES 117
3D RAVE VALVES 117
ACTUATOR CHECK VALVES 123
LUBRICATION CHECK VALVES 123
SOLENOID 124
3D RAVE VALVES POSITION SENSOR 126
12 – RAVE (797) 129
GENERAL 131
SYSTEM DESCRIPTION 131
TROUBLESHOOTING 136
DIAGNOSTIC FLOW CHART 136
TROUBLESHOOTING TIPS 137
PROCEDURES 137
3D RAVE VALVE 137
CHECK VALVES 142
SOLENOIDS 143
13 – TOP END (593) 147
GENERAL 150
PROCEDURES 150
REED VALVES 150
CYLINDER HEAD COVER (500SS/600) 151
CYLINDER HEAD (500SS/600) 151
CYLINDER HEAD (600 HO E-TEC) 152
CYLINDERS 152
PISTONS 154
14 – TOP END (797) 157
GENERAL 159
PROCEDURES 159
REED VALVES 159
CYLINDER HEAD 159
PISTONS 160
CYLINDER BLOCK 162

www.midwestmanuals.com

TABLE OF CONTENTS

02 ENGINE (cont'd)

15 – BOTTOM END (593) 165
GENERAL 168
PROCEDURES 168
WATER PUMP 168
WATER PUMP SHAFT 169
CRANKCASE 172
CRANKSHAFT 174

16 – BOTTOM END (797) 181
GENERAL 183
PROCEDURES 183
WATER PUMP 183
WATER/OIL PUMP SHAFT 184
CRANKCASE 187
CRANKSHAFT 190

03 ENGINE MANAGEMENT SYSTEM

01 – OVERVIEW (500SS/600) 197
GENERAL 197
SYSTEM DESCRIPTION 197

02 – OVERVIEW (600 HO E-TEC) 199
GENERAL 199
SYSTEM DESCRIPTION 199
POWER DISTRIBUTION 201

03 – OVERVIEW (800R) 203
GENERAL 204
SYSTEM DESCRIPTION 204

04 – COMMUNICATION TOOLS AND B.U.D.S. SOFTWARE 207
GENERAL 207
TROUBLESHOOTING 207
COMMUNICATION PROBLEMS 207
PROCEDURES 208
MULTI-PURPOSE INTERFACE-2 (MPI-2) 208
B.U.D.S. SOFTWARE 211

05 – MONITORING SYSTEM AND FAULT CODES 213
GENERAL 213
MONITORING SYSTEM 213
FAULT CODES 216
SPECIFIC FAULT CODES 217
FAULT CODE TABLES 218

04 FUEL SYSTEM

01 – FUEL TANK AND FUEL PUMP 225
GENERAL 228
SYSTEM DESCRIPTION (500SS/600/800R) 228
SYSTEM DESCRIPTION (600 HO E-TEC) 229
INSPECTION 231
FUEL SYSTEM PRESSURIZATION 231
FUEL PUMP PRESSURE TEST (600 HO E-TEC) 232
PROCEDURES 234
FUEL TANK 234
DIAPHRAGM FUEL PUMP (500SS/600/800R) 239
ELECTRIC FUEL PUMP (600 HO E-TEC) 240
FUEL PRESSURE REGULATOR (600 HO E-TEC) 242
IN-LINE FUEL FILTER (600 HO E-TEC) 243

www.midwestmanuals.com

04 FUEL SYSTEM (cont'd)

01 – FUEL TANK AND FUEL PUMP (cont'd)

PROCEDURES (cont'd)

FUEL LEVEL SENSOR 244
OETIKER CLAMPS 247

02 – TM CARBURETORS 249

PROCEDURES 251
CARBURETORS 251
THROTTLE POSITION SENSOR (TPS) 257
THROTTLE CABLE 261
CHOKE CABLE 264

03 – DPM SYSTEM (800R) 265

GENERAL 267
SYSTEM DESCRIPTION 267

PROCEDURES 267
AIR TEMPERATURE SENSOR (ATS) 267
AIR PRESSURE SENSOR (APS) 269
DPM SOLENOID 270
DPM MANIFOLD 271

04 – E-TEC DIRECT FUEL INJECTION 273

GENERAL 273
SYSTEM DESCRIPTION 274

ADJUSTMENT 276
IDLE SPEED 276
CLOSED THROTTLE RESET (TPS) 276

TROUBLESHOOTING 277
DIAGNOSTIC TIPS 277

PROCEDURES 278
FUEL HOSES AND OETIKER CLAMPS 278
THROTTLE CABLE 279
FUEL INJECTOR 281
ENGINE CONTROL MODULE (ECM) 294
THROTTLE BODY 304
THROTTLE POSITION SENSOR (TPS) 305
CRANKSHAFT POSITION SENSOR (CPS) 309
AIR TEMPERATURE SENSOR (ATS) 310
COOLANT TEMPERATURE SENSOR (CTS) 312
AIR PRESSURE SENSOR (APS) 314
EXHAUST GAS TEMPERATURE SENSOR (EGTS) 315
KNOCK SENSOR (KS) 316

05 ELECTRICAL SYSTEM

01 – IGNITION SYSTEM 319

GENERAL 319
SYSTEM DESCRIPTION (500SS/600/800R) 319
SYSTEM DESCRIPTION (600 HO E-TEC) 319

ADJUSTMENT 321
IGNITION TIMING 321

TROUBLESHOOTING 327
IGNITION SYSTEM TESTING SEQUENCE 327

PROCEDURES 328
SPARK PLUGS 328
SPARK PLUG CABLES (500SS/600/800R) 330
SPARK PLUG CABLES (600 HO E-TEC) 331
ENGINE STOP SWITCH 331

www.midwestmanuals.com

TABLE OF CONTENTS

05 ELECTRICAL SYSTEM (cont'd)

01 – IGNITION SYSTEM (cont'd)

PROCEDURES (cont'd)

IGNITION COIL (500SS/600/800R) 335
IGNITION COILS (600 HO E-TEC) 337
TRIGGER COILS (500SS/600/800R) 341
KNOCK SENSOR (800R) 342
ENGINE CONTROL MODULE (500SS/600/800R) 343

02 – CHARGING SYSTEM 349

GENERAL 349
SYSTEM DESCRIPTION 349
TROUBLESHOOTING 349
TROUBLESHOOTING GUIDELINES (500SS/600/800R) 350
TROUBLESHOOTING GUIDELINES (600 HO E-TEC) 350
PROCEDURES 350
CHARGING FUSE 350
CHARGING RELAY (R2) 351
VOLTAGE REGULATOR/RECTIFIER (500SS/600/800R) 351
VOLTAGE REGULATOR/RECTIFIER (600 HO E-TEC) 354
DC-DC CONVERTER (600 HO E-TEC) 356
CAPACITOR (600 HO E-TEC) 358
BATTERY (YTX20L-BS) 362

03 – STARTING SYSTEM 367

GENERAL 369
BASIC STARTING SYSTEM OPERATION 369
TROUBLESHOOTING 369
TROUBLESHOOTING TIPS 369
STARTING SYSTEM TESTING SEQUENCE 369
PROCEDURES 369
START/RER FUSE 369
ELECTRIC STARTER 370
STARTER SOLENOID 375
START/RER SWITCH (500SS/600/800R) 377
START/RER SWITCH 600 HO E-TEC 380

04 – DIGITALLY ENCODED SECURITY SYSTEM (D.E.S.S.) 385

GENERAL 385
SYSTEM DESCRIPTION 385
PROCEDURES 385
D.E.S.S. KEY 385
D.E.S.S. POST 386
BEEPER 389

05 – ROTAX ELECTRONIC REVERSE 391

GENERAL 391
TROUBLESHOOTING 391
DIAGNOSTIC TIPS 391
PROCEDURES 392
RER FUSE (600 HO E-TEC) 392
RER SWITCH (500SS/600/800R) 392
RER SWITCH (600 HO E-TEC) 394
BEEPER (REVERSE ALARM) 397

06 – LIGHTS, GAUGE AND ACCESSORIES 399

GENERAL 399
TROUBLESHOOTING 399
LIGHTING AND ACCESSORIES SYSTEM TESTING 399
ACCESSORY CIRCUIT TEST WITH B.U.D.S. 400

www.midwestmanuals.com

05 ELECTRICAL SYSTEM (cont'd)
06 – LIGHTS, GAUGE AND ACCESSORIES (cont'd)
PROCEDURES 400
FUSES 400
RELAY R1 (LIGHTS AND ACCESSORIES) 402
HEADLIGHTS 403
TAILLIGHT 406
GAUGE 406
REMOTE MODE AND SET BUTTON 412
SPEED SENSOR 413
FUEL LEVEL SENSOR 414
HEATED THROTTLE LEVER 415
HEATED HANDLEBAR GRIPS 416
12-VOLT POWER OUTLET 424
VISOR OUTLET 424

06 DRIVE SYSTEM AND BRAKE
01 – DRIVE BELT 425
GENERAL 425
APPLICATION CHART 425
PROCEDURES 425
DRIVE BELT GUARD 425
DRIVE BELT GUARD SUPPORT 426
DRIVE BELT 426
02 – DRIVE PULLEY 433
GENERAL 436
PROCEDURES 436
DRIVE PULLEY 436
03 – DRIVEN PULLEY AND COUNTERSHAFT 449
GENERAL 452
PROCEDURES 452
DRIVEN PULLEY 452
COUNTERSHAFT 458
COUNTERSHAFT BEARING 458
COUNTERSHAFT BEARING SUPPORT 459
04 – BRAKE 461
GENERAL 463
MAINTENANCE 463
BRAKE FLUID 463
PROCEDURES 464
BRAKE PADS 464
CALIPER 466
BRAKE DISC 469
MASTER CYLINDER 469
BRAKE LIGHT SWITCH 470
05 – CHAINCASE 473
GENERAL 475
ADJUSTMENT 475
DRIVE CHAIN 475
MAINTENANCE 475
CHAINCASE OIL 475
PROCEDURES 476
CHAINCASE COVER 476
CHAINCASE 477
CHAINCASE BEARING 480

www.midwestmanuals.com

TABLE OF CONTENTS

06 DRIVE SYSTEM AND BRAKE (cont'd)

05 – CHAINCASE (cont'd)

PROCEDURES (cont'd)

CHAIN TENSIONER 482

06 – DRIVE AXLE 483

GENERAL 485

PROCEDURES 485

DRIVE AXLE 485

MAGNETIC CAPS 486

07 – TRACK 489

PROCEDURES 489

TRACK 489

TRACTION ENHANCING PRODUCTS (STUDS) 491

07 CHASSIS

01 – FRONT SUSPENSION 495

GENERAL 497

ADJUSTMENT 497

SUSPENSION SPRING 497

SHOCK ABSORBER 498

PROCEDURES 498

SHOCK ABSORBER 498

UPPER SUSPENSION ARM 500

UPPER BALL JOINT 501

LOWER SUSPENSION ARM 502

LOWER BALL JOINT 503

SKI LEG 504

STABILIZER BAR 504

02 – REAR SUSPENSION 507

GENERAL 517

PROCEDURES 517

SUSPENSION ASSEMBLY 517

REAR AXLE 518

SHOCK ABSORBERS 520

REAR SPRINGS 535

SLIDER SHOES 538

FRONT ARM 539

REAR ARM 541

PIVOT ARM 543

COUPLING BLOCKS 543

IDLER WHEELS 544

IDLER WHEEL SUPPORT 544

STOPPER STRAP 544

03 – STEERING SYSTEM 547

GENERAL 551

ADJUSTMENT 551

STEERING ALIGNMENT 551

PROCEDURES 552

SKI RUNNER 552

SKI 552

SKI HANDLE 553

SKI LEG 554

HANDLEBAR GRIP 554

HANDLEBAR 556

HANDLEBAR EXTENSION 557

www.midwestmanuals.com

07 CHASSIS (cont'd)

03 – STEERING SYSTEM (cont'd)

PROCEDURES (cont'd)

TIE-ROD 558

STEERING COLUMN 559

04 – BODY 561

GENERAL 561

CLEANING 561

BODY PARTS REPAIR 561

PROCEDURES 562

DECAL 562

SIDE PANEL 562

REWIND STARTER HANDLE HOUSING 562

HOOD 563

BOTTOM PAN COVER 564

FRONT BUMPER 565

FRONT BOTTOM PAN 566

WINDSHIELD 568

GAUGE SUPPORT 568

CONSOLE 570

REAR RACK (GTX SPORT/LE) 572

05 – FRAME 575

GENERAL 577

RIVET DRILLING PROCEDURE 577

PROCEDURES 578

FRAME 578

REAR BUMPER 578

REAR FRAME MEMBER 578

FRONT FRAME MEMBER 579

FRONT CROSS MEMBER 580

ENGINE MEMBER 582

08 TECHNICAL SPECIFICATIONS

01 – 500SS MODELS 585

02 – 600 MODELS 591

03 – 600 HO E-TEC MODELS 595

04 – 800R MODELS 615

09 WIRING DIAGRAM

01 – WIRING DIAGRAM INFORMATION 625

GENERAL 625

WIRING DIAGRAM LOCATION 625

WIRING DIAGRAM CODES 625

SUMITOMO CONNECTOR INFORMATION 626

DEUTSCH CONNECTOR INFORMATION 627

PACKARD CONNECTOR INFORMATION 627

AMP MULTILOCK CONNECTOR INFORMATION 629

AMP CONNECTOR (8-CIRCUIT) INFORMATION 631

AMP CONNECTOR INFORMATION (ECM OF 600 HO E-TEC) 631

BATTERY CABLE TERMINAL INFORMATION 633

www.midwestmanuals.com

INTRODUCTION

GENERAL

This shop manual covers the following BRP made 2009 REV-XP and REV-XR (2-stroke) models:

MODEL	ENGINE TYPE	CHASSIS	MODEL NUMBER
GTX LE 600 HO E-TEC	593	REV-XR (2-stroke)	ES9A
GSX Limited 600 HO E-TEC	593	REV-XP	DD9A
GSX Sport 500SS	593	REV-XP	DC9A
GTX Sport 500SS	593	REV-XP	ED9A
MXZ 50TH 600 HO E-TEC	593	REV-XP	MP9A, MP9B
MXZ Adrenaline 600 HO E-TEC	593	REV-XP	BL9A, BL9B, BL9C, BL9D
MXZ Adrenaline 800R Power TEK	797	REV-XP	BD9A, BD9B, BD9C, BD9D
MXZ Renegade 600 HO E-TEC	593	REV-XP	BX9A, BX9B, BX9C, BX9D, BX9E
MXZ Renegade 800R Power TEK	797	REV-XP	BU9A, BU9B, BU9C, BU9D
MXZ Renegade X 600 HO E-TEC	593	REV-XP	BW9A, BW9B, BW9C, BW9D, BW9E
MXZ Renegade X 800R Power TEK	797	REV-XP	BS9A, BS9B, BS9C, BS9D, BS9E
MXZ Trail 500SS	593	REV-XP	BH9A, BH9B
MXZ TNT 500SS	593	REV-XP	MF9A, MF9B, MF9C
MXZ TNT 600 HO E-TEC	593	REV-XP	MJ9A, MJ9B, MJ9C
MXZ X 600 HO E-TEC	593	REV-XP	BK9A, BK9B, BK9C, BK9D, BK9E
MXZ X 800R Power TEK	797	REV-XP	BB9A, BB9B, BB9C, BB9D, BB9E
Summit 50TH 800R Power TEK	797	REV-XP	CZ9A
Summit Everest 600	593	REV-XP	CY9A, CY9B
Summit Everest 600 HO E-TEC	593	REV-XP	CX9A, CX9B, CX9C
Summit Everest (146) 800R Power TEK	797	REV-XP	CU9A, CU9B
Summit Everest (154) 800R Power TEK	797	REV-XP	CT9A, CT9B
Summit Everest (163) 800R Power TEK	797	REV-XP	CW9A, CW9B
Summit Hill Climb (154) 800R Power TEK	797	REV-XP	CF9A
Summit X 600 HO E-TEC	593	REV-XP	CV9A, CV9B

www.midwestmanuals.com

MODEL	ENGINE TYPE	CHASSIS	MODEL NUMBER
Summit X (146) 800R Power TEK	797	REV-XP	CH9A, CH9B, CH9C, CH9D
Summit X (154) 800R Power TEK	797	REV-XP	CG9A, CG9B, CG9C, CG9D, CG9E
Summit X (163) 800R Power TEK	797	REV-XP	CP9A, CP9B, CP9C, CP9D

The information and component/system descriptions contained in this manual are correct at time of publication. BRP however, maintains a policy of continuous improvement of its products without imposing upon itself any obligation to install them on products previously manufactured.

Due to late changes, it may have some differences between the manufactured product and the description or specifications in this document.

BRP reserves the right at any time to discontinue or change specifications, designs, features, models or equipment without incurring obligation.

This manual uses technical terms which may be slightly different from the ones used in the *PARTS CATALOG*.

When ordering parts always refer to the specific model *PARTS CATALOG*.

HOW TO IDENTIFY YOUR VEHICLE

VEHICLE IDENTIFICATION NUMBER LOCATION

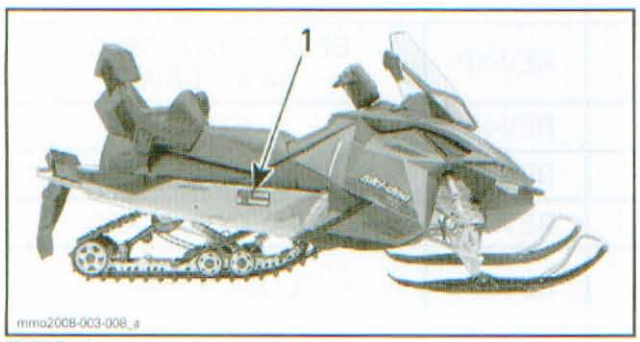

TYPICAL
1. Vehicle identification number

IDENTIFICATION NUMBER MEANING

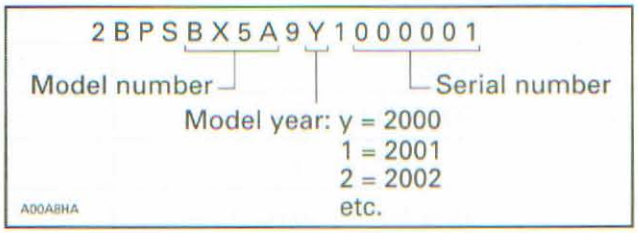

ENGINE SERIAL NUMBER LOCATION

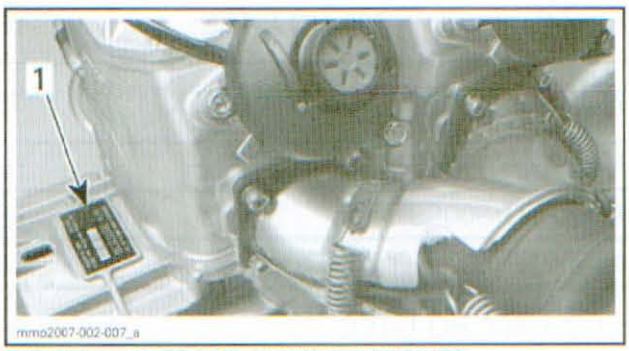

TYPICAL — 500SS AND 600 HO SDI ENGINES
1. Engine serial number

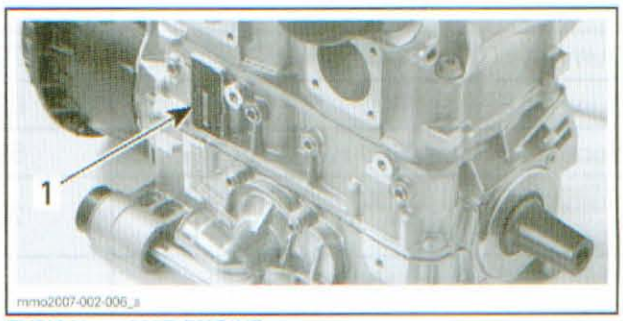

TYPICAL — 800R ENGINE
1. Engine serial number

SNOWMOBILE LIFTING

To lift a REV-XP or a REV-XR (2-stroke) securely, it is important to use the reinforced footrest holes.

www.midwestmanuals.com

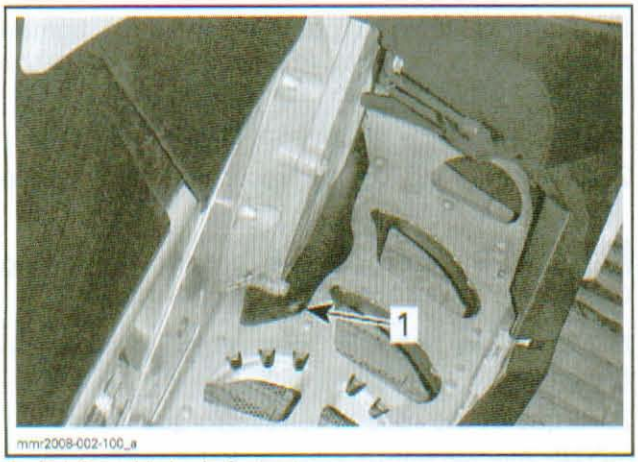

1. Reinforced holes in footrest

Install lifting tool hooks in holes as shown.

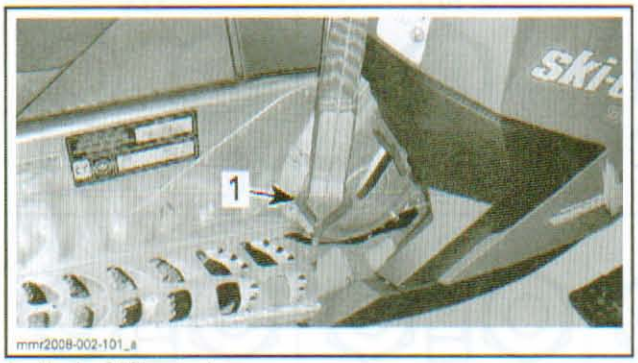

1. Hook of lifting tool

NOTICE Do not use footrest opening or steering column to lift the snowmobile. Frame or steering system could be seriously damaged.

ENGINE EMISSIONS INFORMATION

MANUFACTURER'S RESPONSIBILITY

Manufacturers of engines must determine the exhaust emission levels for each engine horsepower family and certify these engines with the United States of America *ENVIRONMENTAL PROTECTION AGENCY (EPA).* An emissions control information label, showing emission levels and engine specifications, must be placed on each vehicle at the time of manufacture.

DEALER RESPONSIBILITY

When performing service on snowmobiles that carry an emissions control information label, adjustments must be kept within published factory specifications.

Replacement or repair of any emission related component must be executed in a manner that maintains emission levels within the prescribed certification standards.

Dealers are not to modify the engine in any manner that would alter the horsepower or allow emission levels to exceed their predetermined factory specifications.

Exceptions include manufacturer's prescribed changes, such as altitude adjustments for example.

OWNER RESPONSIBILITY

The owner/operator is required to have engine maintenance performed to maintain emission levels within prescribed certification standards.

The owner/operator is not to, and should not allow anyone to modify the engine in any manner that would alter the horsepower or allow emissions levels to exceed their predetermined factory specifications.

EPA EMISSION REGULATIONS

Some Ski-Doo snowmobiles manufactured by BRP are certified to the EPA as conforming to the requirements of the regulations for the control of air pollution from new snowmobiles engines. This certification is contingent on certain adjustments being set to factory standards. For this reason, the factory procedure for servicing the product must be strictly followed and, whenever practicable, returned to the original intent of the design.

The responsibilities listed above are general and in no way a complete listing of the rules and regulations pertaining to the EPA requirements on exhaust emissions for snowmobiles products. For more detailed information on this subject, you may contact the following locations:

FOR ALL COURIER SERVICES:
U.S. Environmental Protection Agency
Office of Transportation and Air Quality
1310 L Street NW
Washington D.C. 20005

REGULAR US POSTAL MAIL:
1200 Pennsylvania Ave. NW
Mail Code 6403J
Washington D.C. 20460

INTERNET: http://www.epa.gov/otaq/

E-MAIL: otaqpublicweb@epa.gov

www.midwestmanuals.com

TIGHTENING TORQUE

Tighten fasteners to torque mentioned in exploded views and/or text, When they are not specified, refer to following table.

⚠ WARNING

Torque wrench tightening specifications must strictly be adhered to.
Locking devices (e.g.: locking tabs, elastic stop nuts, self-locking fasteners, etc.) must be installed or replaced with new ones, where specified. If the efficiency of a locking device is impaired, it must be renewed.

In order to avoid a poor assembling, tighten screws, bolts or nuts in accordance with the following procedure:

1. Manually screw all screws, bolts and/or nuts.
2. Apply the half of the recommended torque value.

NOTICE **Be sure to use proper tightening torque for the proper strength grade.**

NOTE: When possible, always apply torque on the nut.

3. Torque at the recommended torque value.

NOTE: Always torque screws, bolts and/or nuts in a criss-cross sequence.

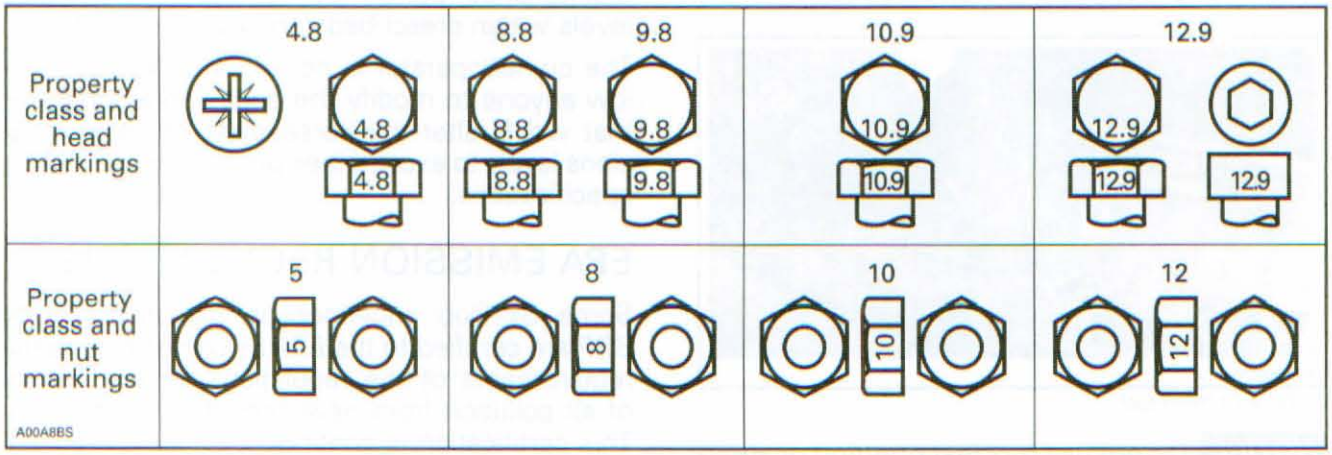

FASTENER SIZE	FASTENER GRADE/TORQUE			
	5.8 Grade	**8.8** Grade	**10.9** Grade	**12.9** Grade
M4	1.5 – 2 N•m (13 – 18 lbf•**in**)	2.5 – 3 N•m (22 – 27 lbf•**in**)	3.5 – 4 N•m (31 – 35 lbf•**in**)	4 – 5 N•m (35 – 44 lbf•**in**)
M5	3 – 3.5 N•m (27 – 31 lbf•**in**)	4.5 – 5.5 N•m (40 – 47 lbf•**in**)	7 – 8.5 N•m (62 – 75 lbf•**in**)	8 – 10 N•m (71 – 89 lbf•**in**)
M6	6.5 – 8.5 N•m (58 – 75 lbf•**in**)	8 – 12 N•m (71 – 106 lbf•**in**)	10.5 – 15 N•m (93 – 133 lbf•**in**)	16 N•m (142 lbf•**in**)
M8	15 N•m (133 lbf•**in**)	24.5 N•m (18 lbf•ft)	31.5 N•m (23 lbf•ft)	40 N•m (30 lbf•ft)
M10	29 N•m (21 lbf•ft)	48 N•m (35 lbf•ft)	61 N•m (45 lbf•ft)	72.5 N•m (53 lbf•ft)
M12	52 N•m (38 lbf•ft)	85 N•m (63 lbf•ft)	105 N•m (77 lbf•ft)	127.5 N•m (94 lbf•ft)
M14	85 N•m (63 lbf•ft)	135 N•m (100 lbf•ft)	170 N•m (125 lbf•ft)	200 N•m (148 lbf•ft)

www.midwestmanuals.com

SELF-LOCKING FASTENERS PROCEDURE

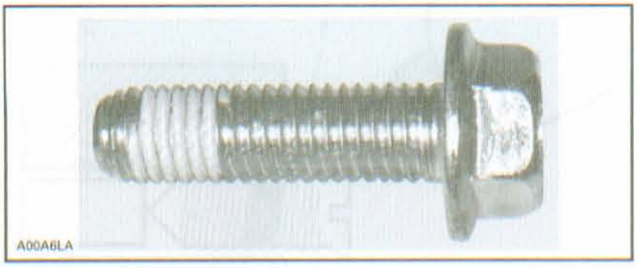

TYPICAL — SELF-LOCKING FASTENER

The following describes the most common application procedures when working with self-locking fasteners.

Use a metal brush or a tap to clean the hole properly then use a solvent, let act during 30 minutes and wipe off. The solvent utilization is to ensure the adhesive works properly.

LOCTITE APPLICATION PROCEDURE

The following describes the most common application procedures when working with Loctite products.

NOTE: Always use proper strength Loctite product as recommended in this shop manual.

THREADLOCKER

Uncovered Holes (bolts and nuts)

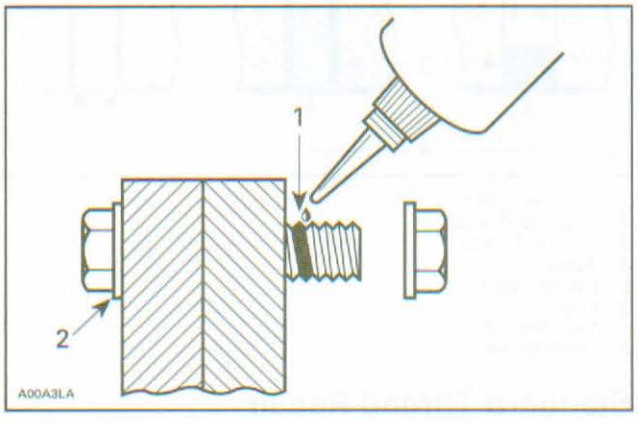

1. *Apply here*
2. *Do not apply*

1. Clean threads (bolt and nut) with solvent.
2. Apply LOCTITE PRIMER N (P/N 293 800 041) on threads and allow to dry.
3. Choose proper strength Loctite threadlocker.
4. Fit bolt in the hole.
5. Apply a few drops of threadlocker at proposed tightened nut engagement area.
6. Position nut and tighten as required.

Blind Holes

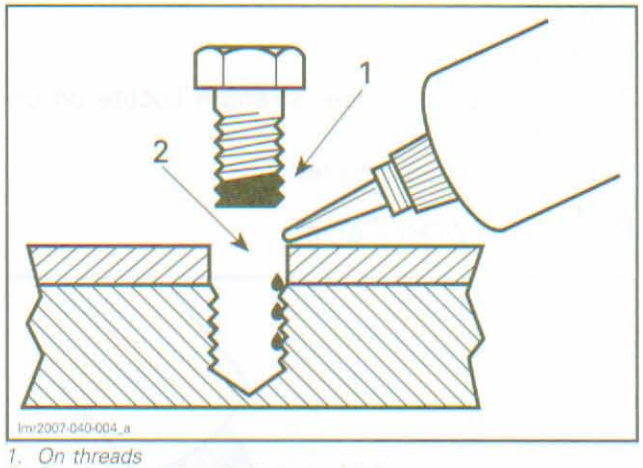

1. *On threads*
2. *On threads and at the bottom of hole*

1. Clean threads (bolt and hole) with solvent.
2. Apply LOCTITE PRIMER N (P/N 293 800 041) on threads (bolt and nut) and allow to dry for 30 seconds.
3. Choose proper strength Loctite threadlocker.
4. Apply several drops along the threaded hole and at the bottom of the hole.
5. Apply several drops on bolt threads.
6. Tighten as required.

Stud in Blind Holes

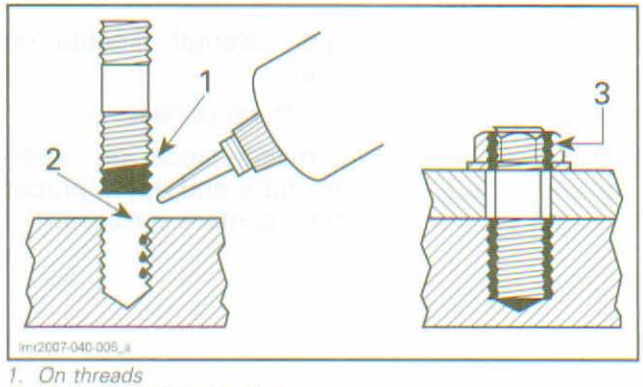

1. *On threads*
2. *On threads and in the hole*
3. *Onto nut threads*

1. Clean threads (stud and hole) with solvent.
2. Apply LOCTITE PRIMER N (P/N 293 800 041) on threads and allow to dry.

www.midwestmanuals.com

3. Put 2 or 3 drops of proper strength Loctite threadlocker on female threads and in hole.

NOTE: To avoid a hydro lock situation, do not apply too much Loctite.

4. Apply several drops of proper strength Loctite on stud threads.
5. Install stud.
6. Install cover, etc.
7. Apply drops of proper strength Loctite on uncovered threads.
8. Tighten nuts as required.

Pre-assembled Parts

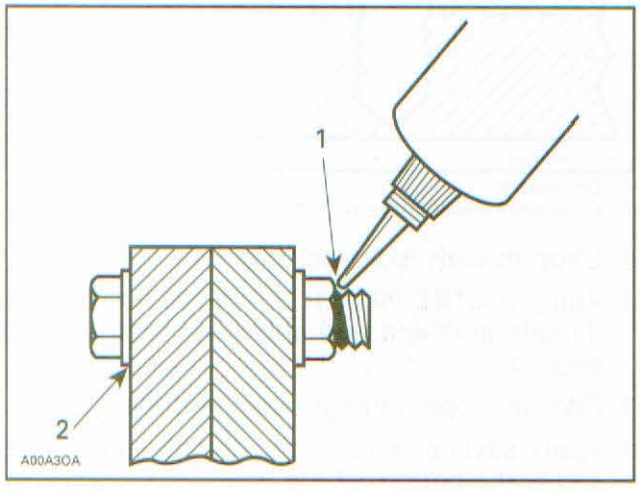

1. Apply here
2. Do not apply

1. Clean bolts and nuts with solvent.
2. Assemble components.
3. Tighten nuts.
4. Apply drops of proper strength Loctite on bolt/nut contact surfaces.
5. Avoid touching metal with tip of flask.

NOTE: For preventive maintenance on existing equipment, retighten nuts and apply proper strength Loctite on bolt/nut contact surfaces.

Adjusting Screw

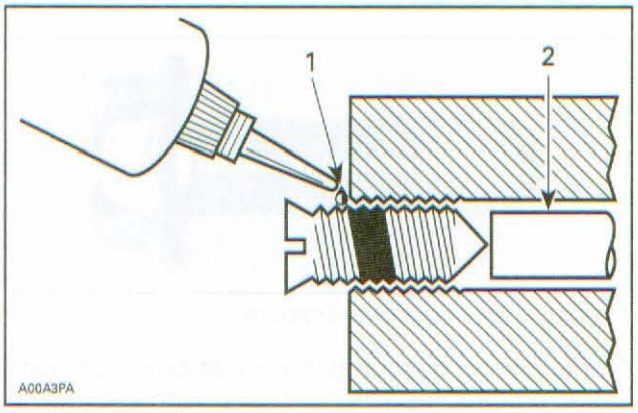

1. Apply here
2. Plunger

1. Adjust screw to proper setting.
2. Apply drops of proper strength Loctite threadlocker on screw/body contact surfaces.
3. Avoid touching metal with tip of flask.

NOTE: If it is difficult to readjust, heat screw with a soldering iron (232°C (450°F)).

STRIPPED THREAD REPAIR

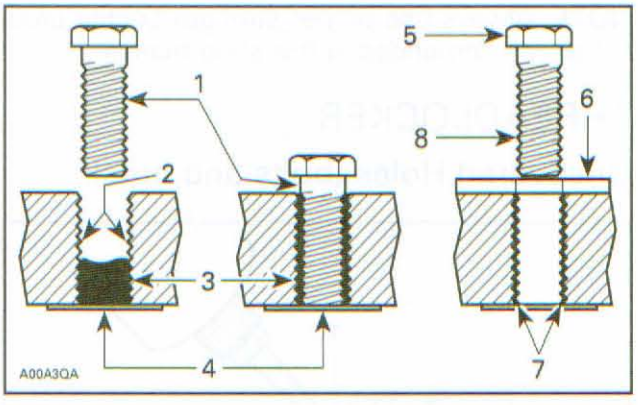

1. Release agent
2. Stripped threads
3. Form-A-Thread
4. Tapes
5. Cleaned bolt
6. Plate
7. New threads
8. Threadlocker

Standard Thread Repair

Follow instructions on Loctite FORM-A-THREAD 81668 package.

If a plate is used to align bolt:

1. Apply release agent on mating surfaces.
2. Put waxed paper or similar film on the surfaces.

www.midwestmanuals.com

3. Twist bolt when inserting it to improve thread conformation.

NOTE: NOT intended for engine stud repairs.

Repair of Small Holes/Fine Threads

Option 1: Enlarge damaged hole, then follow *STANDARD THREAD REPAIR* procedure.

Option 2: Apply FORM-A-THREAD on the screw and insert in damaged hole.

Permanent Stud Installation (light duty)

1. Use a stud or thread on desired length.
2. DO NOT apply release agent on stud.
3. Do a STANDARD THREAD REPAIR.
4. Allow to cure for 30 minutes.
5. Assemble.

GASKET COMPOUND

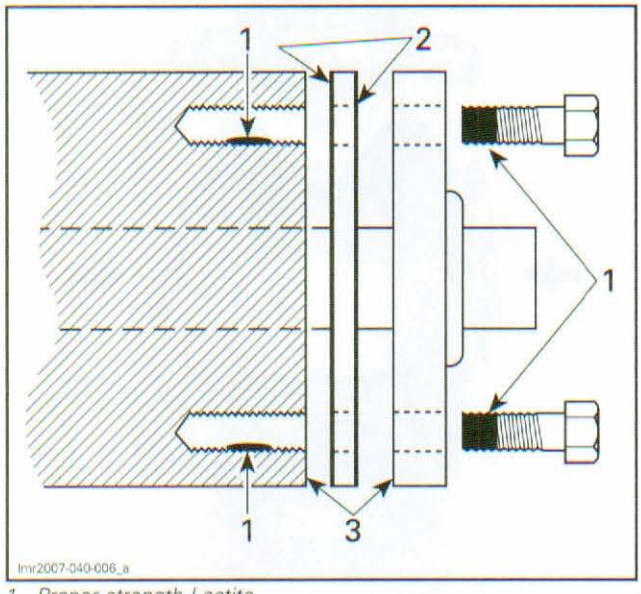

1. *Proper strength Loctite*
2. *Loctite Primer N (P/N 293 800 041) and Gasket Eliminator 518 (P/N 293 800 038) on both sides of gasket*
3. *Loctite Primer N only*

1. Remove old gasket and other contaminants with LOCTITE CHISEL REMOVER (P/N 413 708 500). Use a mechanical mean if necessary.

NOTE: Avoid grinding.

2. Clean both mating surfaces with solvent.
3. Spray Loctite Primer N on both mating surfaces and on both sides of gasket. Allow to dry 1 or 2 minutes.
4. Apply GASKET ELIMINATOR 518 (P/N 293 800 038) on both sides of gasket, using a clean applicator.
5. Place gasket on mating surfaces and assemble immediately.

NOTE: If the cover is bolted to blind holes (above), apply proper strength Loctite in the hole and on threads. Tighten.

If holes are sunken, apply proper strength Loctite on bolt threads.

6. Tighten as usual.

MOUNTING ON SHAFT

Mounting with a Press

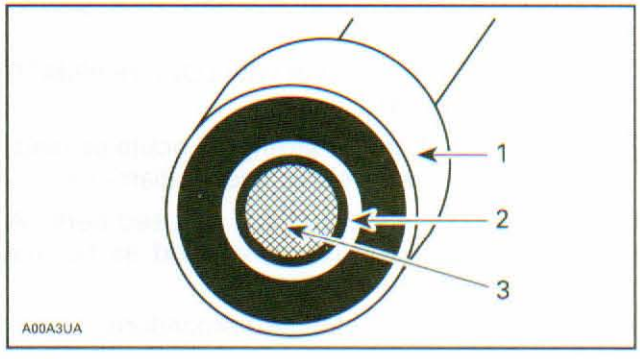

1. *Bearing*
2. *Proper strength Loctite*
3. *Shaft*

1. Clean shaft external part and element internal part.
2. Apply a strip of proper strength Loctite on shaft circumference at insert or engagement point.

NOTE: Retaining compound is always forced out when applied on shaft.

3. DO NOT use antiseize Loctite or any similar product.
4. No curing period is required.

Mounting in Tandem

1. Apply retaining compound on internal element bore.
2. Continue to assemble as shown above.

www.midwestmanuals.com

CASE-IN COMPONENTS

Metallic Gaskets

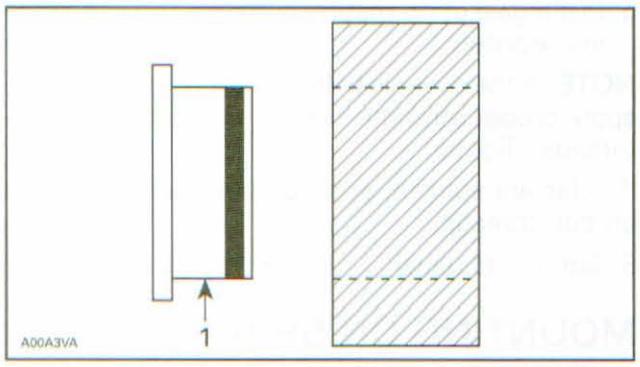

1. Proper strength Loctite

1. Clean inner housing diameter and outer gasket diameter.
2. Spray housing and gasket with LOCTITE PRIMER N (P/N 293 800 041).
3. Apply a strip of proper strength Loctite on leading edge of outer metallic gasket diameter.

NOTE: Any Loctite product can be used here. A low strength liquid is recommended as normal strength and gap are required.

4. Install according to standard procedure.
5. Wipe off surplus.
6. Allow it to cure for 30 minutes.

NOTE: Normally used on worn-out housings to prevent leaking or sliding.

It is generally not necessary to remove gasket compound applied on outer gasket diameter.

MANUAL INFORMATION

The manual is divided into many major sections as you can see in the main table of contents at the beginning of the manual.

Each section is divided in various subsections, and again, each subsection has one or more division.

Illustrations and photos show the typical construction of the different assemblies and, in all cases, may not reproduce the full detail or exact shape of the parts shown. However, they represent parts which have the same or a similar function.

NOTICE Most components of those vehicles are built with parts dimensioned in the metric system. Most fasteners are metric and must not be replaced by customary fasteners or vice-versa. Mismatched or incorrect fasteners could cause damage to the vehicle or possible personal injury.

As many of the procedures in this manual are interrelated, we suggest, that before undertaking any task, you read and thoroughly understand the entire section or subsection in which the procedure is contained.

A number of procedures throughout the book require the use of special tools. Before commencing any procedure, be sure that you have on hand all the tools required, or approved equivalents.

The use of RIGHT and LEFT indications in the text, always refers to driving position (when sitting on vehicle).

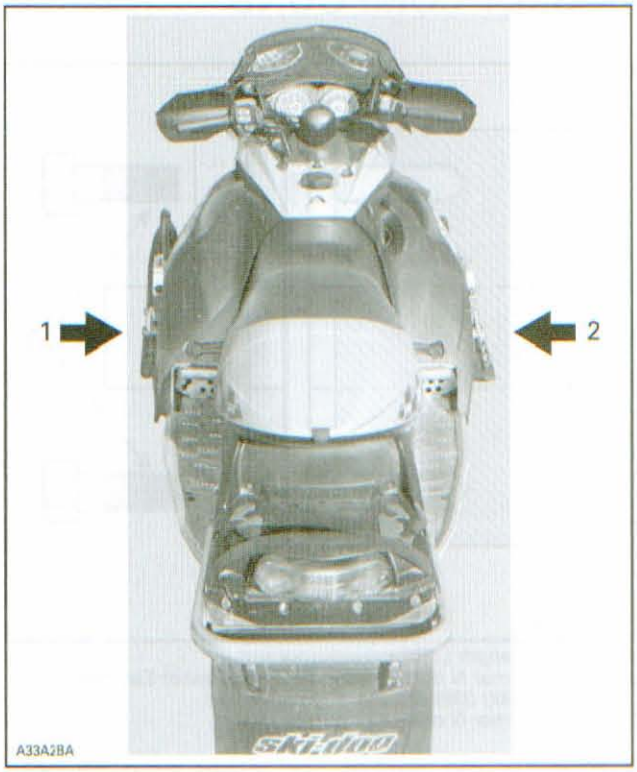

TYPICAL
1. Left
2. Right

www.midwestmanuals.com

TYPICAL PAGE

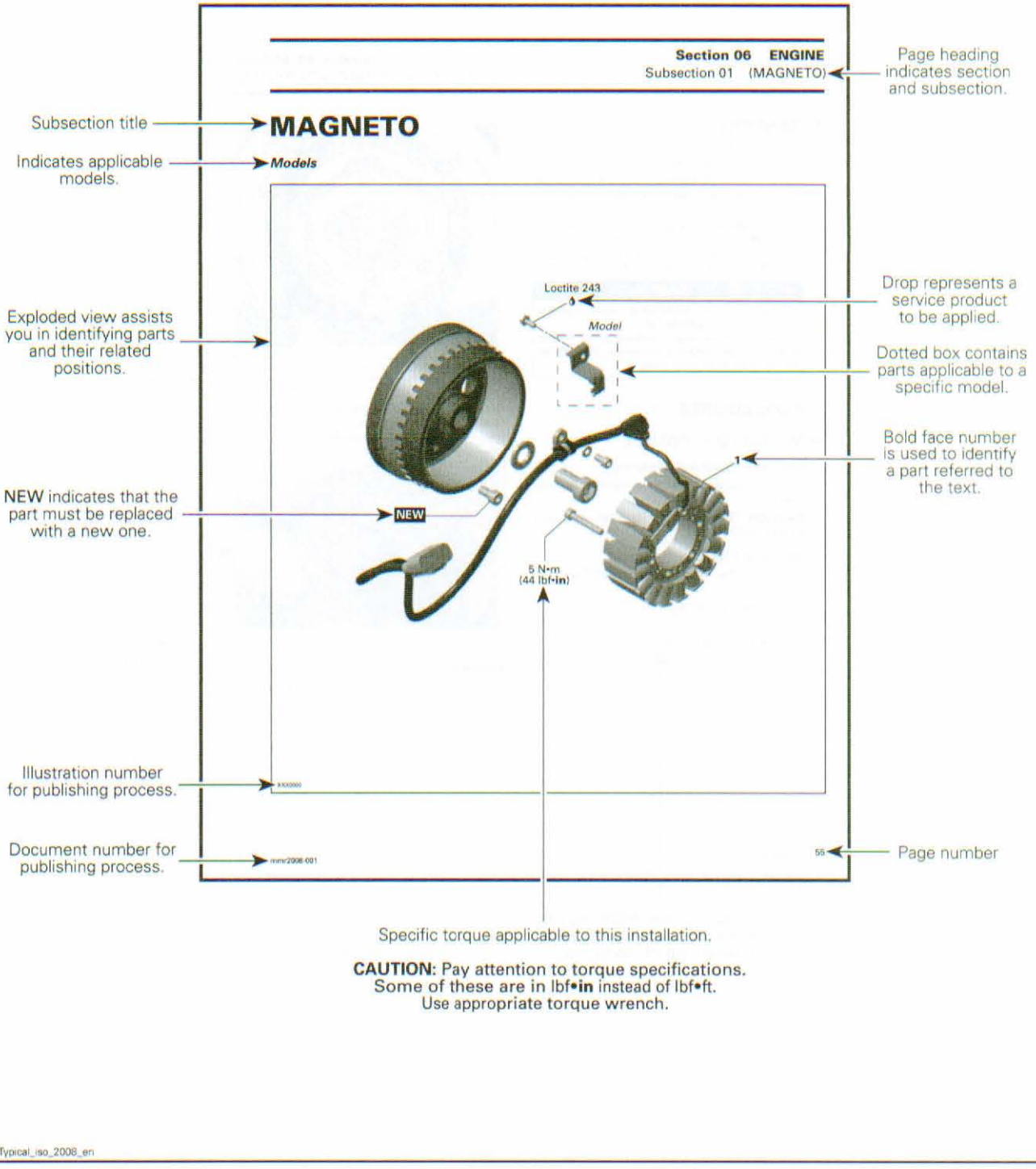

www.midwestmanuals.com

TYPICAL PAGE

Section 03 ENGINE
Subsection 09 (MAGNETO SYSTEM)

Tittle in bold indicates category of information to be carried out.

GENERAL

NOTE: The following procedures can be done without removing the engine.

During assembly/installation, use the torque values and service products as in the exploded views.

Reference to a specific section or subsection.

Clean threads before applying a threadlocker. Refer to *SELF-LOCKING FASTENERS* and *LOCTITE APPLICATION* sections at the beginning of this manual for complete procedure.

⚠ WARNING

Torque wrench tightening specifications must be strictly adhered to.
Locking devices (e.g.: locking tabs, elastic stop nuts, self-locking fasteners, etc.) must be replaced with new ones.

PROCEDURES

Indicates component procedures apply to.

MAGNETO FLYWHEEL

Magneto Flywheel Cleaning

Clean all metal components in a non-ferrous metal cleaner.

CAUTION: Clean magneto flywheel using only a clean cloth.

Indicates specific procedure to be carried out.

Magneto Flywheel Removal

Remove muffler, refer to the *EXHAUST SYSTEM* section.

Remove acoustic panel.

Remove rewind starter.

Remove starting pulley no. 2.

Bold face number following part name refers to exploded view at beginning of subsection.

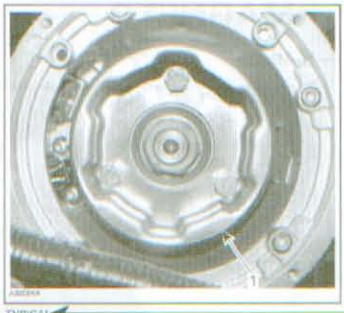

TYPICAL

"TYPICAL" indicates a general view which may not represent exact details.

Call-outs pertaining to above illustration.

NOTE: To remove starting pulley bolts, hold magneto flywheel with a socket as shown.

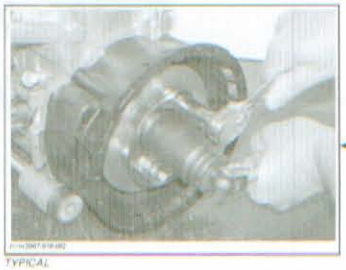

TYPICAL

Illustration always follows text to which it applies.

Models

Remove the connecting flange retaining the rewind starter to the engine housing.

Italic bold face typesetting indicates a procedure applicable to a specific model(s).

typical_txt_2008_en

www.midwestmanuals.com

MAINTENANCE CHART

A: ADJUST
C: CLEAN
I: INSPECT
L: LUBRICATE
R: REPLACE

*: TO BE PERFORMED BY AN AUTHORIZED SKI-DOO DEALER

PART/TASK	*10-HOUR OR 500 km (300 mi)	Weekly or every 240 km (150 mi)	Monthly or every 800 km (500 mi)	Every year or 3200 km (2000 mi)	Every 2 years or 6000 km (3700 mi)	*Storage	*Preseason	LEGEND
ENGINE								
Rewind starter						L,C	I	
Engine motor mounts	I			I		I		
Exhaust system	I			I		I		
Exhaust manifold screws (1)	I						I	
Engine lubrication						L		
Cooling system	I			I			I	
Coolant	I				R			(1) Retighten to specified torque.
Crankshaft PTO seal							I	
RAVE valves				C				
RAVE valves solenoid (E-TEC and 800R)				I				
Injection oil filter					R			
Oil injection pump (500SS and 800R)	A			A			A	
Engine stopper				A				
ENGINE MANAGEMENT SYSTEM								
EMS fault codes	I					I		
FUEL SYSTEM								
Fuel stabilizer						(2)		
Fuel filter					R			
Fuel lines, fuel rail and connections	I						I	
Carburetor Venturi							C	(2) Add to fuel prior to engine lubrication.
Throttle body (E-TEC)							C	
Throttle cable	I			I			I	
Air silencer filter			I				I	
Fuel injection system (visual inspection)				I			I	

www.midwestmanuals.com

A: ADJUST
C: CLEAN
I: INSPECT
L: LUBRICATE
R: REPLACE

*: TO BE PERFORMED BY AN AUTHORIZED SKI-DOO DEALER

PART/TASK	*10-HOUR OR 500 km (300 mi)	Weekly or every 240 km (150 mi)	Monthly or every 800 km (500 mi)	Every year or 3200 km (2000 mi)	Every 2 years or 6000 km (3700 mi)	*Storage	*Preseason	LEGEND
DRIVE SYSTEM								
Drive belt (3)	I	I					I	(3) Adjust drive belt height and check the tension at every belt removal.
Drive pulley (4)	I		I	C		I	C	
Driven pulley	I		I	C		I	C	(4) Tightening torque of drive pulley must be checked at the 10-hour inspection and every year or 3200 km (2000 mi) thereafter.
Brake fluid	I	I			R		I	
Brake hose, pads and disk	I	I					I	
Drive chain	A		A			A		(5) Check track condition before each ride.
Chaincase oil						R		
Track (5)	A	(6)						(6) Adjust track tension and alignment as required.
STEERING								
Steering mechanism	I		I			I		
FRONT SUSPENSION								
Front suspension mechanism (7)	I,L		I,L			I,L		(7) Lubricate whenever the vehicle is used in wet conditions (wet snow, rain, puddles).
Skis and runners	I	I				I		
REAR SUSPENSION								
Rear suspension (7)	I		I,L			I,L		(7) Lubricate whenever the vehicle is used in wet conditions (wet snow, rain, puddles).
Suspension stopper strap				I		I		
ELECTRICAL SYSTEM								
Spark plugs (500SS and 800R)	I		I				R	
Spark plugs (E-TEC)	(8)							
Battery (if so equipped)	I		I			I	I	(8) Spark plugs must be inspected or replaced every 3 years or 10 000 km (6200 mi).
Wiring harnesses, cables and lines	I		I			I		
Lighting system (HI/LO beam, brake light, etc.). Engine stop switch and tether cord cap (DESS)	I	I				I		
CHASSIS/BODY								
Headlights beam aiming				A			A	—
Engine compartment	C		C			C		
Vehicle cleaning and protection	C		C			C		

www.midwestmanuals.com

STORAGE PROCEDURE

SERVICE PRODUCTS

Description	Part Number	Page
BRP PLASTIC & VINYL CLEANER	413 711 200	6
FUEL STABILIZER	413 408 600	3
SCRATCH REMOVER KIT	861 774 800	6
STORAGE OIL (CANADA)	413 711 600	4
STORAGE OIL (USA)	413 711 900	4
SUSPENSION GREASE	293 550 033	5
XP-S LUBE	293 600 016	5

GENERAL

Proper snowmobile storage is a necessity during the summer months or when a vehicle is not being used for certain period of time.

If vehicle is not intended to be used within one month, add fuel stabilizer in fuel tank to prevent fuel deterioration. Refer to *FUEL SYSTEM* further in this section.

If vehicle is not intended to be used within three months, refer to storage column from *MAINTENANCE CHART* jointly with the present storage procedures in order to cover each and every aspect of the snowmobile storage procedure. Any worn, broken or damaged parts must be replaced.

⚠ WARNING

Unless otherwise specified, engine should be turned off for storage procedure.

To facilitate the inspection and ensure adequate lubrication of components, it is recommended to clean the entire vehicle.

PROCEDURES

ENGINE MANAGEMENT SYSTEM

Fault Codes

1. Using B.U.D.S., verify fault codes state. Refer to *ENGINE MANAGEMENT SYSTEM* section.

FUEL SYSTEM

Fuel System Protection

With the new fuel additives, it is critical to use the FUEL STABILIZER (P/N 413 408 600) or an equivalent to prevent fuel deterioration, gum formation and fuel system gumming. Follow manufacturer's instructions for proper use.

NOTICE Fuel stabilizer should be added prior to engine lubrication to ensure fuel system components protection against varnish deposits.

1. Pour fuel stabilizer in fuel tank.
2. Fill up fuel tank completely.
3. Ensure there is no water inside fuel tank.

NOTICE Should any water be trapped inside fuel tank, severe internal damage will occur to the fuel injection system (600 HO E-TEC).

Do not drain fuel system.

ENGINE

Rewind Starter

For inspection, cleaning and lubrication, refer to *REWIND STARTER* section.

Engine Motor Mounts

1. Check if engine supports are cracked or damaged. Replace if necessary.
2. Check rubber mount on engine supports. Replace them if brittle, cracked or damaged.

Exhaust System

Check and replace if necessary:

- Tuned pipe shields and deflectors for damages
- Tuned pipe ends for cracks or damages
- Manifold for cracks or damages.

www.midwestmanuals.com

Engine Lubrication (500SS/600/800R)

NOTICE **Fuel stabilizer should be added prior to engine lubrication to ensure carburetor protection against varnish deposit.**

Engine internal parts must be lubricated to protect them from possible rust formation during the storage period.

Proceed as follows:

1. Place the vehicle in a well ventilated area and start the engine.
2. Start the engine and let it run at idle speed until it reached its operating temperature.
3. Stop the engine.
4. Remove the primary air intake silencer. Refer to *AIR INTAKE SYSTEM* for the removal procedure.
5. Restart engine and run at idle speed.
6. Inject storage oil into each carburetor/throttle body until the engine stalls or until a sufficient quantity of oil has entered the engine (approximately half a can).
7. With the engine stopped, remove the spark plugs and spray STORAGE OIL (CANADA) (P/N 413 711 600) or STORAGE OIL (USA) (P/N 413 711 900) into each cylinder.
8. Crank slowly 2 or 3 revolutions to lubricate cylinders.
9. Reinstall the spark plugs and primary air intake silencer.

Engine Lubrication (600 HO E-TEC)

Engine Lubrication Using B.U.D.S. Software

1. Place the vehicle in a well ventilated area.
2. Connect B.U.D.S. Refer to *COMMUNICATION TOOLS/B.U.D.S. SOFTWARE* section.
3. Start the engine and let engine run at idle speed until it reached its operating temperature.
4. In B.U.D.S., select **Read Data**.
5. Select **Activation** folder.
6. Go to the **ECM** page.
7. Press on **Storage** button and follow instructions.

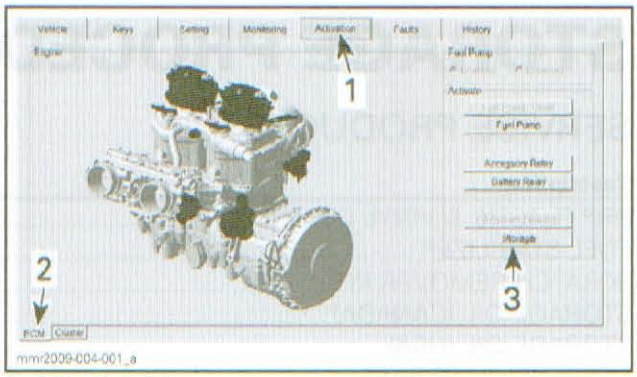

1. **Activation** *folder*
2. **ECM** *page*
3. **Storage** *button*

The engine lubrication procedure takes approximately 1 minute. During this time the engine RPM will increase slightly.

At the end of engine lubrication procedure, the ECM will turn the engine off.

8. Remove tether cord to avoid starting the vehicle during storage period.

Engine Lubrication Using Multifunction Gauge

1. Place the vehicle in a well ventilated area.
2. Start the engine and let it run at idle speed until it reached its operating temperature.
3. Push the SET (S) button to select odometer (Km/Mi) mode.

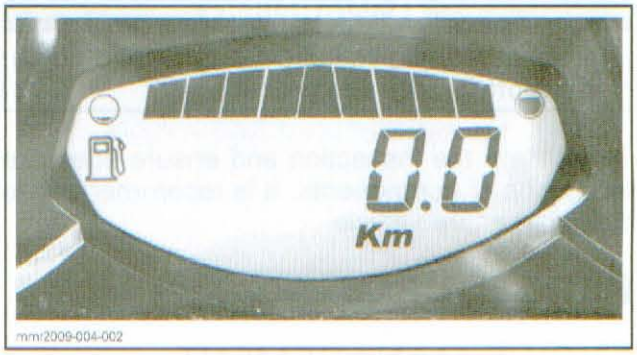

NOTE: The storage mode does not function in other modes (trip A, trip B and hr trip).

4. Quickly depress the HI/LOW beam switch rapidly and simultaneously press and hold the SET (S) button.
5. Release switch and button when PUSH "S" appears in the display.

www.midwestmanuals.com

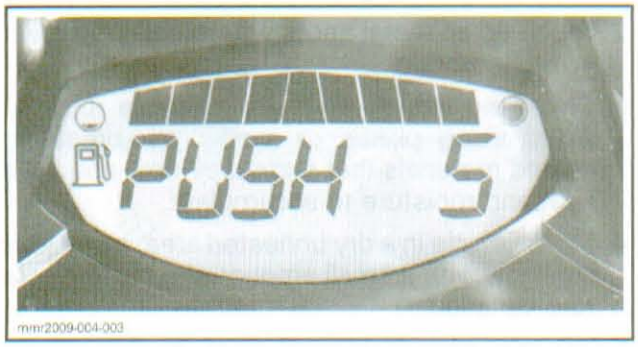

mm2009-004-003

6. Press and hold the SET (S) button 2 - 3 seconds.
7. When OIL appears in display, release the button and wait the end of the procedure.

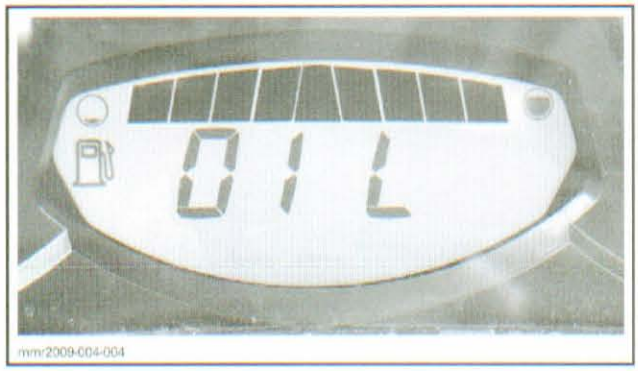

mm2009-004-004

The engine lubrication procedure takes approximately 1 minute. During this time the engine RPM will increase slightly.

At the end of engine lubrication procedure, the ECM will turn the engine off.

8. Remove tether cord to avoid starting the vehicle during storage period.

ELECTRICAL SYSTEM

Battery (if so equipped)

1. Remove battery, clean its tray and surrounding area with water and baking soda.
2. Inspect, clean and charge battery as explained in *CHARGING SYSTEM* section.

Wiring Harnesses, Cables and Connectors

1. Inspect for wear, deterioration or damage, replace defective parts if necessary.

DRIVE/BRAKE SYSTEM

Drive and Driven Pulleys

1. Remove drive belt.
2. Inspect and clean pulleys.
3. Spray XP-S LUBE (P/N 293 600 016) on sheaves to protect them from rust.
4. Do not reinstall drive belt.

Drive Axle End Bearing (Brake Side)

1. Remove the disc brake protector cover and make a visual inspection of the bearing seal to ensure it is not damaged. Replace bearing if damaged. Refer to *DRIVE AXLE* section.

Track

NOTE: Do not release track tension.

1. Visually inspect track for:
   - Cuts and abnormal wear
   - Broken rods
   - Broken or missing track cleats.

If track is damaged or rods are broken, replace track, refer to *TRACK* section.

For damaged or missing cleats, refer to *TRACK* section for procedure.

Chaincase

Chaincase Oil

1. Replace chaincase oil, refer to *CHAINCASE* section.

Drive Chain

1. Check drive chain tension and adjust if necessary, refer to *CHAINCASE* section.

CHASSIS

Front Suspension

1. Inspect the front suspension arms for wear or damages, replace if necessary. Refer to *FRONT SUSPENSION* section.

Rear Suspension

1. Inspect rear suspension components for wear, deterioration or damage, replace defective parts if necessary.
2. Inspect strap(s) for wear or cracks.
3. Check bolt and nut securing strap(s) for tightness. If loose, inspect strap holes for deformation. Replace strap if necessary.
4. Lubricate rear arm at grease fittings using SUSPENSION GREASE (P/N 293 550 033).

Steering Mechanism

1. Lubricate the steering mechanism if needed. Inspect all components for tightness.

www.midwestmanuals.com

Skis and Runners

1. Inspect skis and runners for wear, deterioration or damage, replace if necessary.

VEHICLE

Vehicle Cleaning

Keep engine compartment clean of grass, twigs, cloth, etc. These are combustible under certain conditions.

To clean the vehicle, do not use high pressure washers (like the ones found in car washes) as it may damage certain parts of the vehicle.

To clean the vehicle, proceed as follows:

1. Rinse the vehicle thoroughly with water to remove loose dirt.
2. Using a soft clean cloth, wash the vehicle with water mixed with a mild detergent, such as soap specially formulated for motorcycles or automobiles.
3. While washing the vehicle, check for grease or oil. If necessary, use BRP PLASTIC & VINYL CLEANER (P/N 413 711 200) or a mild automotive degreaser. Follow thoroughly the manufacturer's instructions.

NOTICE **Do not use heavy duty cleaner on decals or vinyl.**

4. Dry the vehicle with a chamois or a soft towel.

⚠ WARNING

Do not apply a vinyl or plastic protector on the seat as the surface will become slippery and the operator or the passenger may slip off the vehicle.

Windshield Polishing

Windshield can be polished using SCRATCH REMOVER KIT (P/N 861 774 800) or a plastic cleaner specially formulated for these special surfaces.

NOTICE **Do not clean the windshield with alkaline or acid cleaner, gasoline or solvent to avoid windshield damage.**

Vehicle Waxing

Apply only nonabrasive wax safe for clearcoats paints on glossy finishes.

Avoid applying wax on mat surfaces.

Vehicle Protection

1. Block air intake and muffler with clean rags.
2. Touch up all metal spots where paint has been scratched off.
3. Cover the vehicle with a permeable material. Avoid using plastic or similar non-breathing, coated materials that restrict air flow and allow heat and moisture to accumulate.
4. Store vehicle in a dry unheated area, away from sunlight, with a small amount of daily temperature variation.
5. Lift rear of vehicle until track is clear of the ground. Install on a snowmobile mechanical stand.

www.midwestmanuals.com

PRESEASON PREPARATION

SERVICE PRODUCTS

Description	Part Number	Page
PULLEY FLANGE CLEANER	413 711 809	8

GENERAL

Proper vehicle preparation is necessary after the summer months or when a vehicle has not been used for more than three months.

Refer to preseason preparation column from *MAINTENANCE CHART* jointly with the present preseason preparation procedures in order to cover each and every aspect of the snowmobile preseason preparation procedure.

Any worn, broken or damaged parts found during the storage procedure should have been replaced. If not, proceed with the replacement.

⚠ WARNING

Unless otherwise specified, engine should be turned off for preparation procedure.

PROCEDURES

ENGINE

Exhaust Manifold

Check exhaust manifold screws for looseness. Retorque if necessary.

Muffler

Remove rags that were installed during storage preparation.

Cooling System

Inspect cooling system for leaks, to perform a cooling system leak test, refer to *COOLING SYSTEM* section.

Check coolant level in coolant reservoir. Add coolant if necessary.

If engine is cold, refill up to 15 mm (5/8 in) over COLD level line.

If engine is hot, refill up to 25 mm (1 in) over COLD level line. Use caution when opening pressurized coolant reservoir cap. Place a rag over cap and turn it slowly to release pressure.

Crankshaft PTO Seal

Make sure there is no grease coming out from crankshaft PTO seal, if so replace seal. Refer to *BOTTOM END* section.

Air Intake Silencer Prefilter

Ensure that air intake silencer prefilter is properly installed and in good condition.

Rinse prefilter with fresh water to clean or replace if damaged.

Oil Injection Pump

500SS/600/800R

Make sure oil injection pump is properly adjusted, refer to *LUBRICATION SYSTEM* section.

RAVE Valves (600 HO E-TEC)

NOTE: This action must be performed only when the vehicle preparation is completed.

1. Remove LH side panel.
2. Remove tool kit support located on drive belt guard.
3. Remove 3D RAVE valves cover.
4. Start engine and let it run 1 minute at idle.
5. Disconnect 3D RAVE vacuum/pressure hose on PTO side.
6. Press on the link bar and check the 3D RAVE valves operation.

If the RAVE valves move freely, reinstall removed parts.

If not, clean the RAVE valves. Refer to *RAVE VALVE (E-TEC/800R)*.

FUEL SYSTEM

Inspect fuel system for leaks. Perform a fuel system leak test, refer to *FUEL TANK AND FUEL PUMP* section.

www.midwestmanuals.com

Carburetors

500SS/600/800R

Disassemble carburetors in order to clean all internal parts. Do not hesitate to replace any jets having gum or varnish on their surfaces.

NOTE: Cleaning is not required if vehicle was prepared as per storage procedures.

Make sure carburetors are properly adjusted, refer to *FUEL SYSTEM*.

Throttle Body

600 HO E-TEC

Using the PULLEY FLANGE CLEANER (P/N 413 711 809), clean the throttle plates and throttle body bores.

NOTE: To ease cleaning, throttle body should be partially pulled from engine, without disconnecting throttle cable or coolant hose.

NOTICE **Ensure the cleaner does not enter engine intake.**

Throttle Lever

Make sure that throttle lever operates freely, adjust and lubricate throttle cable as required, refer to *FUEL SYSTEM*.

Choke

500SS/600/800R

Make sure choke lever operates freely, adjust and lubricate choke cable as required. Refer to *FUEL SYSTEM*.

ELECTRICAL SYSTEM

Spark Plugs

500SS/600/800R

Once preseason preparation is done, start engine with the old spark plugs to burn excess storage oil. Then, install new spark plugs.

NOTE: Ensure to replace with recommended spark plugs.

Battery (if so equipped)

Verify that battery is fully charged, if not, refer to the appropriate charging procedure in *CHARGING SYSTEM*.

Lighting System

Check if the lighting system works well.

Engine Cut-Out Switch

Check engine cut-out switch operation.

Accessories

Check the operation of all accessories.

DRIVE/BRAKE SYSTEM

Drive and Driven Pulley

Clean drive and driven pulleys sheaves with PULLEY FLANGE CLEANER (P/N 413 711 809).

Drive Belt

Inspect belt for cracks, fraying or abnormal wear. Replace if necessary.

Make sure to install the proper belt with arrow printed on belt pointing front of vehicle.

Brake

Brake Fluid

Check brake fluid in reservoir for proper level. Add fluid (DOT 4) as required.

NOTICE **Use only DOT 4 brake fluid from a sealed container. An opened container may be contaminated or may have absorbed moisture from the air.**

Brake Hose, Pads and Disk

Inspect brake hose for wear, deterioration or damage, replace if necessary.

Inspect brake pads for proper thickness. Refer to *BRAKE* section.

Remove any rust built-up on braking surfaces. Clean brake disk braking surfaces with PULLEY FLANGE CLEANER (P/N 413 711 809).

Track

Verify track tension and alignment, refer to *TRACK* section.

NOTE: Track tension and alignment are interrelated. Do not adjust one without checking the other. Track tension procedure must be carried out prior to track alignment.

www.midwestmanuals.com

ENGINE REMOVAL AND INSTALLATION

SERVICE TOOLS

Description	Part Number	Page
ENGINE REMOVAL HOOK	529 035 829	15, 20, 24–26
LIFTING TOOL	529 036 131	20, 24, 26
SMALL HOSE PINCHER	295 000 076	14, 16, 21
SPARK PLUG LIFT RING	529 035 830	15, 24, 26

Midwest Manuals
sales@midwestmanuals.com
www.midwestmanuals.com

www.midwestmanuals.com

500SS/600/800R

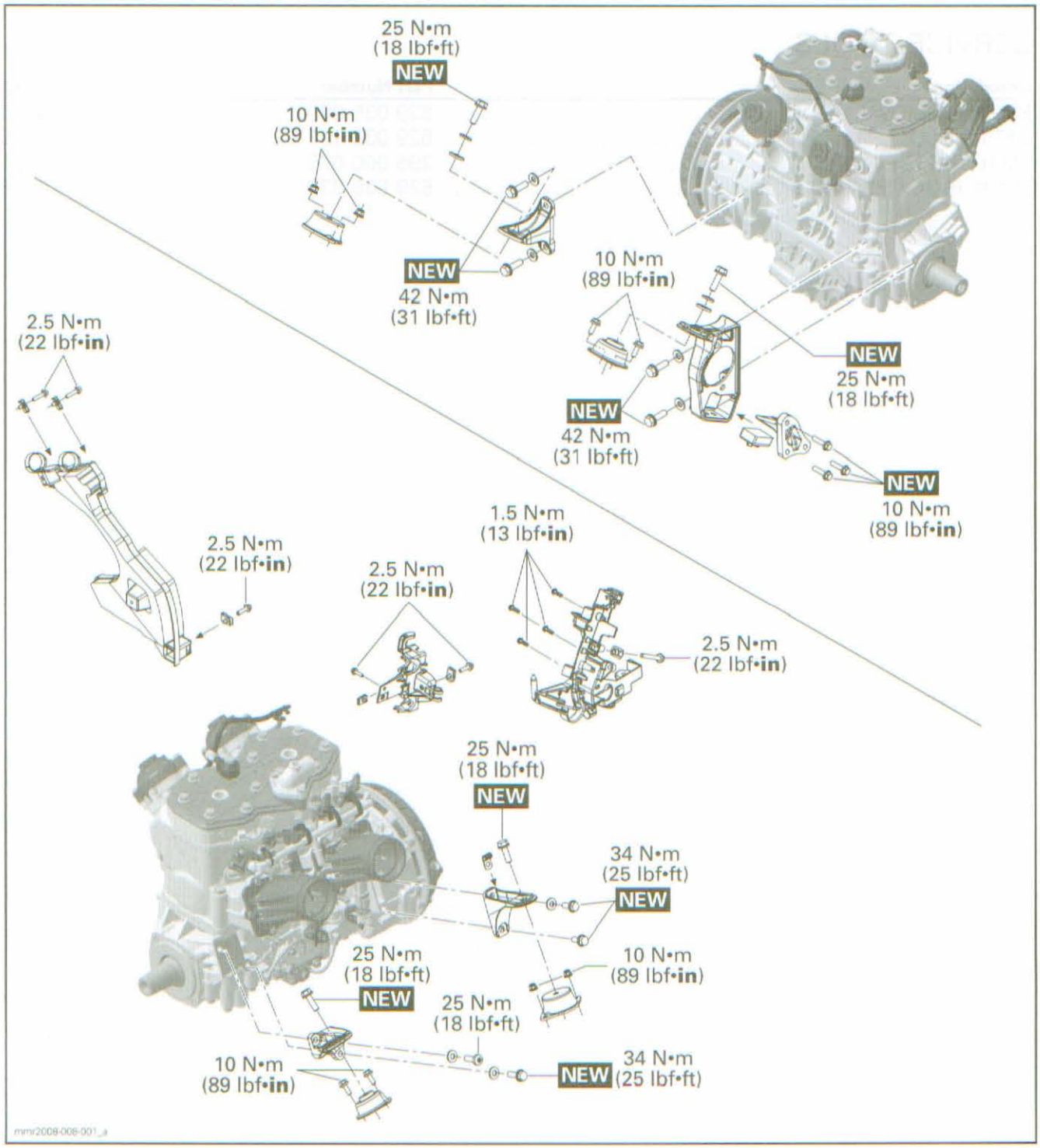

www.midwestmanuals.com

600 HO E-TEC

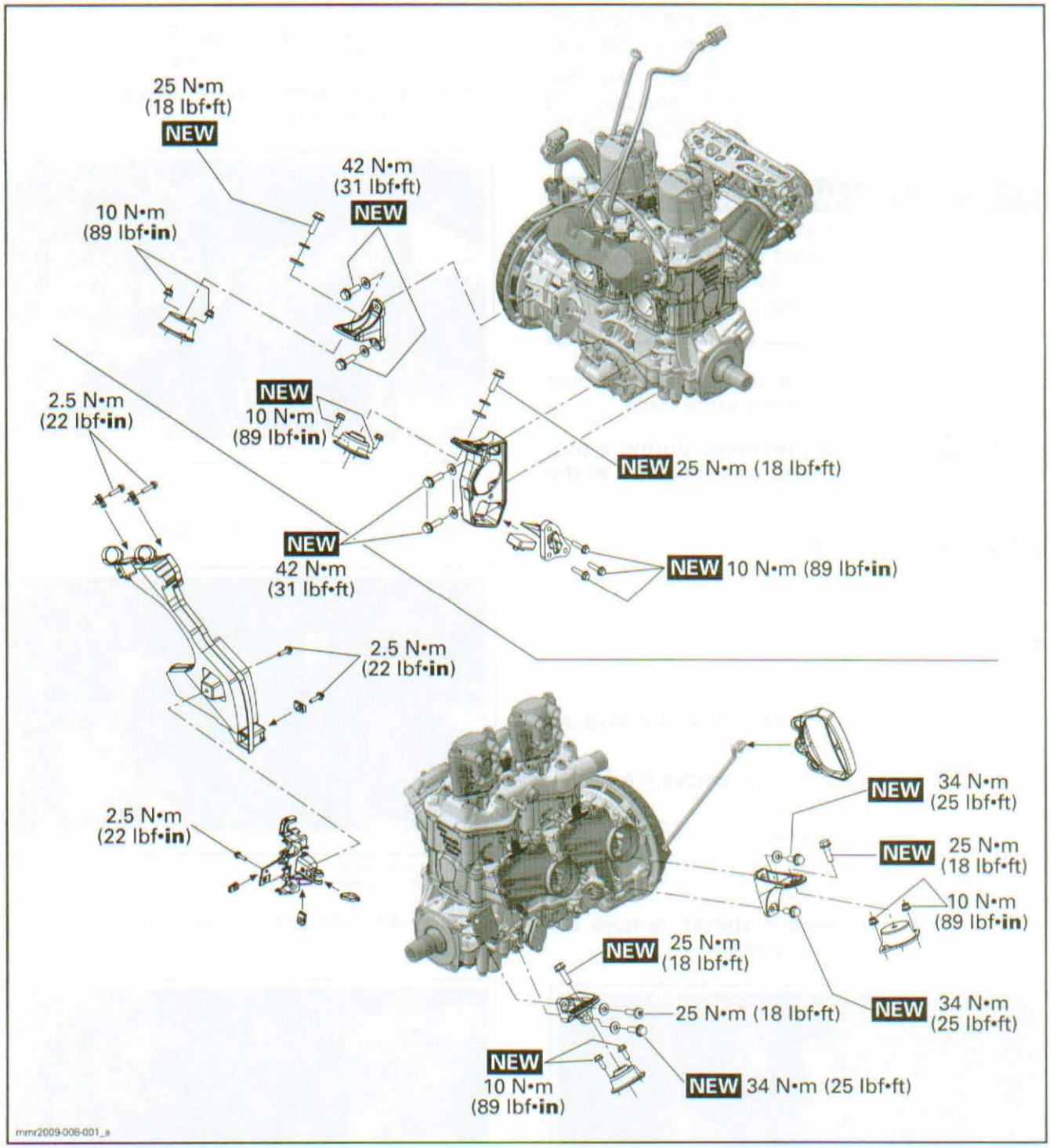

www.midwestmanuals.com

GENERAL

During assembly/installation, use the torque values and service products as in the exploded view.

Clean threads before applying a threadlocker. Refer to *SELF-LOCKING FASTENERS* and *LOCTITE APPLICATION* at the beginning of this manual for complete procedure.

⚠ WARNING

Torque wrench tightening specifications must be strictly adhered to.
Locking devices (e.g.: locking tabs, elastic stop nuts, cotter pin, etc.) must be replaced with new ones.

Hoses or cables removed or disconnected must be installed and routed at the same place.

NOTICE **Locking ties removed during a procedure must be replaced and installed at the same location.**

PROCEDURES

ENGINE

Engine Removal

500SS/600/800R

1. Place vehicle at workstation that will have access to an engine-lifting hoist.
2. Refer to *BODY* section and remove the following:
   - LH and RH side panels
   - Hood
   - Front bottom pan cover.
3. On **vehicle with electric starter**, remove the negative cable (–) from battery.



1. Negative cable

4. Remove muffler and tuned pipe. Refer to *EXHAUST SYSTEM* section.
5. Remove the driven pulley. Refer to *DRIVEN PULLEY AND COUNTERSHAFT* section.
6. On **vehicle with electric starter**, remove starter cable from starter.

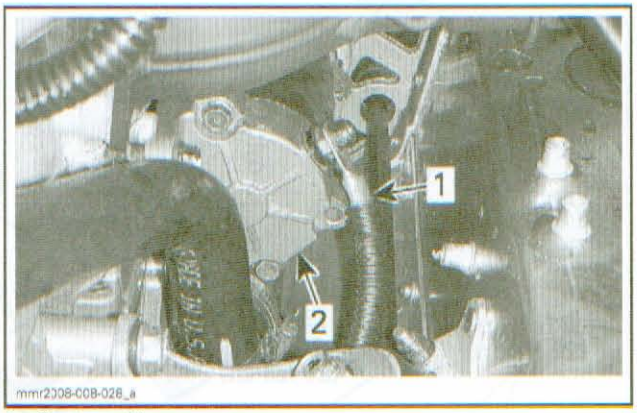

1. Starter cable
2. Starter

7. Disconnect water pump hose to drain engine.

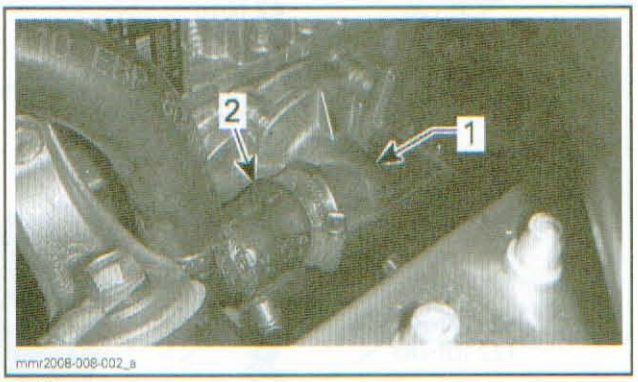

1. Water pump cover
2. Remove this hose

8. Remove the acoustic panel on the RH side of vehicle.

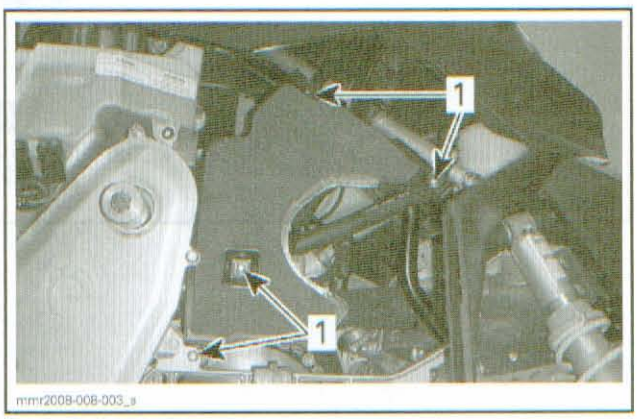

1. Acoustic panel screws

www.midwestmanuals.com

9. Remove rewind starter cover screws and place rewind starter housing aside.

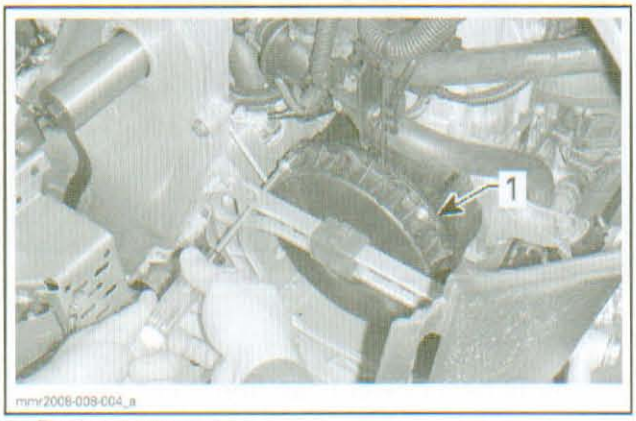

1. Rewind starter cover

10. Cut locking ties securing coolant hose and wiring harness to RAVE solenoid support.

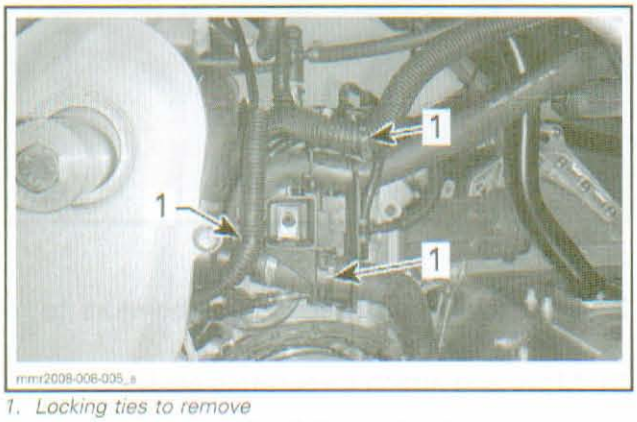

1. Locking ties to remove

11. Detach hoses from support.
12. On **800R models**, unplug RAVE solenoid connector.
13. Unplug trigger coil and magneto connectors.

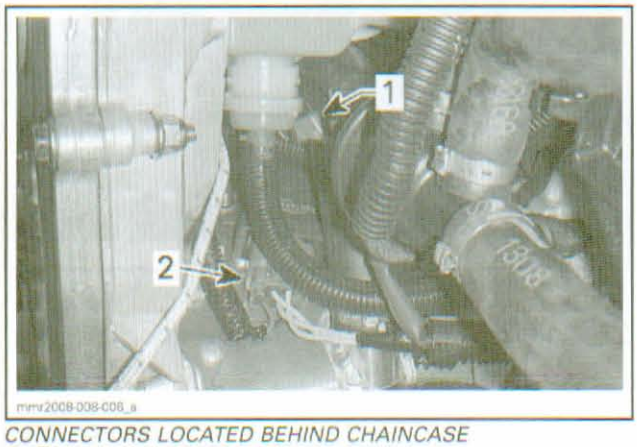

CONNECTORS LOCATED BEHIND CHAINCASE
1. Trigger coil connector
2. Magneto connector

14. Remove YELLOW wires from the magneto connector.
15. Remove and discard screws securing MAG engine supports to front and rear rubber mounts.



FRONT MAG SUPPORT
1. Front engine support screw

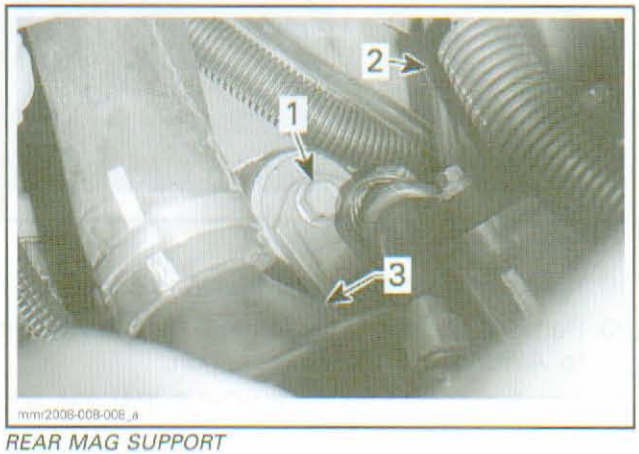

REAR MAG SUPPORT
1. Rear engine support screw
2. Intake adapter
3. Thermostat housing

16. Remove nuts securing the bottom of countershaft bearing support.

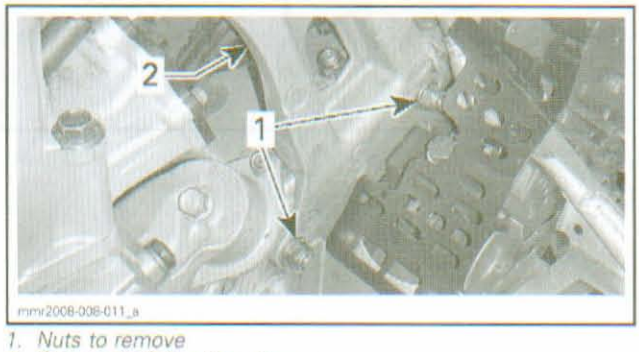

1. Nuts to remove
2. Countershaft bearing support

17. Remove bolt retaining the top of countershaft bearing support.

www.midwestmanuals.com

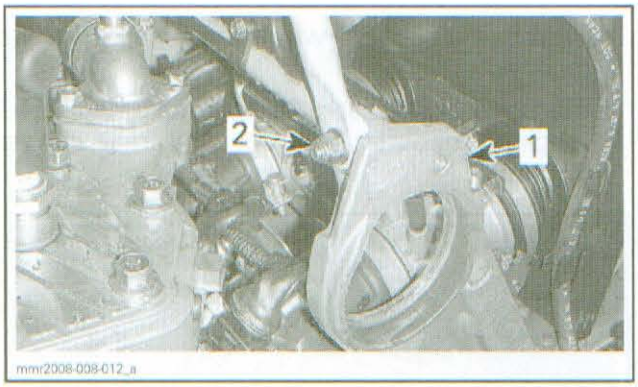

1. *Countershaft bearing support*
2. *Upper bolt*

18. Loosen lower nut located behind support.

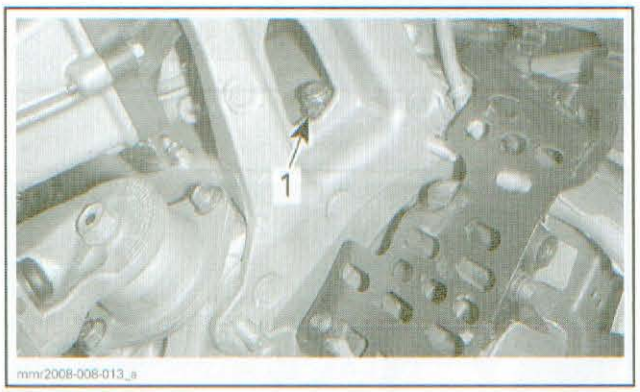

1. *Loosen this nut*

19. Remove the countershaft bearing support.
20. Remove the primary air intake silencer. Refer to *AIR INTAKE SYSTEM* section.
21. Install a SMALL HOSE PINCHER (P/N 295 000 076) on heater hose.

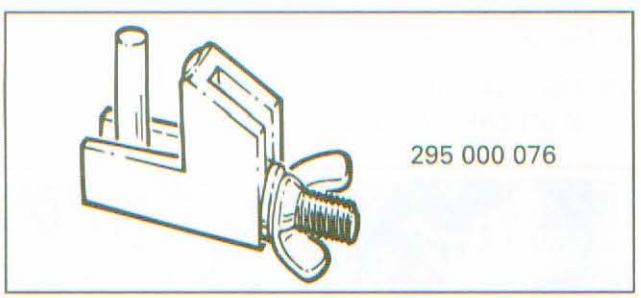

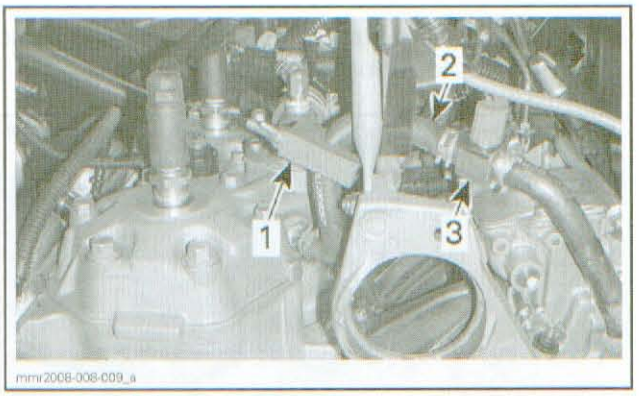

1. *Hose pincher*
2. *Heater hose*
3. *Heater valve*

22. Disconnect heater hose from heater valve.

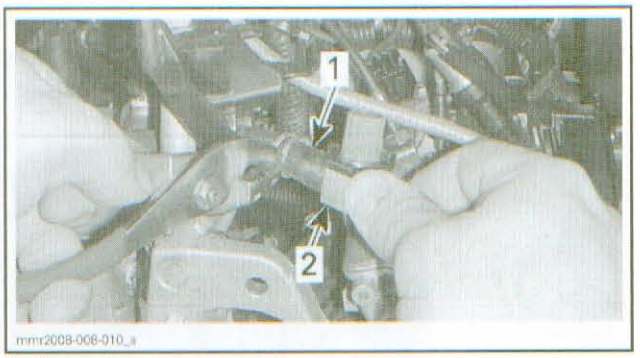

1. *Heater hose*
2. *Heater valve*

23. Unscrew clamps securing carburetors to intake adapters.
24. Move and attach carburetors aside.
25. Unplug the coolant temperature sensor (CTS) connector.

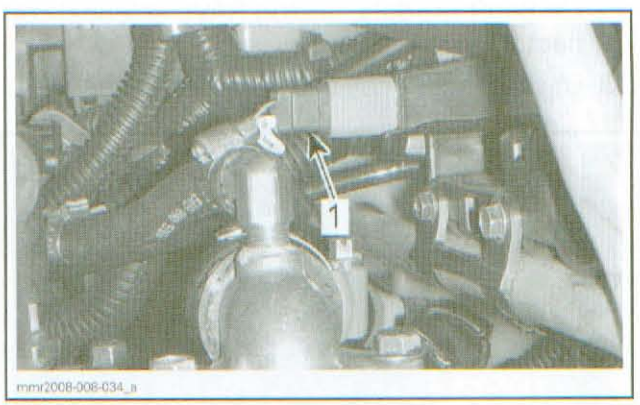

1. *CTS connector*

26. On **800R models**, remove the knock sensor.

www.midwestmanuals.com



1. Knock sensor screw

27. Remove both spark plugs.



1. Spark plugs

28. Remove the elbow on cylinder head cover.
29. Install the SPARK PLUG LIFT RING (P/N 529 035 830) in spark plug hole (PTO side).



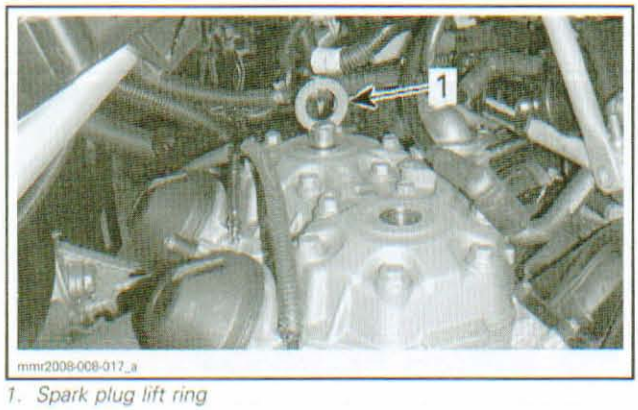

1. Spark plug lift ring

30. On **models equipped with a high windshield**, remove it to avoid scratches during engine removal.
31. Install the ENGINE REMOVAL HOOK (P/N 529 035 829).



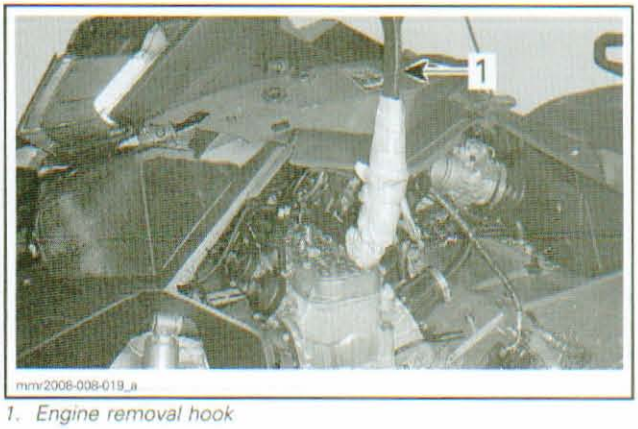

1. Engine removal hook

32. Remove and discard screws securing PTO engine supports to front and rear rubber mounts.

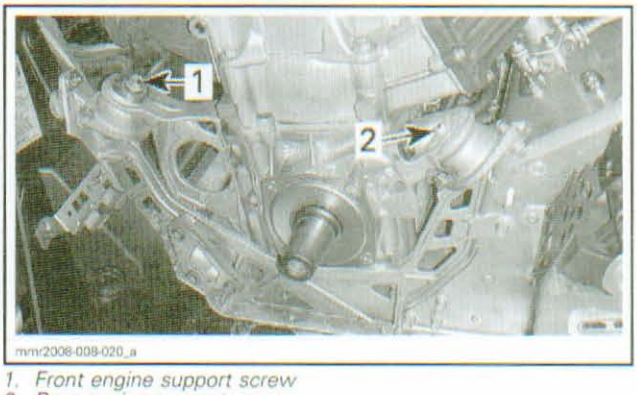

1. Front engine support screw
2. Rear engine support screw

33. Remove the engine stopper. Discard screws.

www.midwestmanuals.com

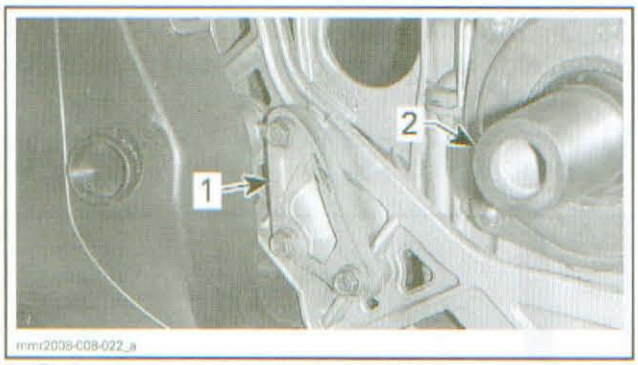

1. *Engine stopper*
2. *Crankshaft*

34. Lift the engine a little.
35. Remove pulse line from fuel pump.

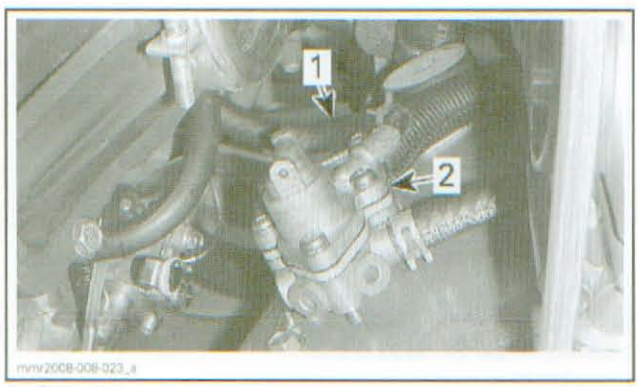

1. *Pulse line*
2. *Fuel pump*

36. Detach oil pump cable from oil pump.

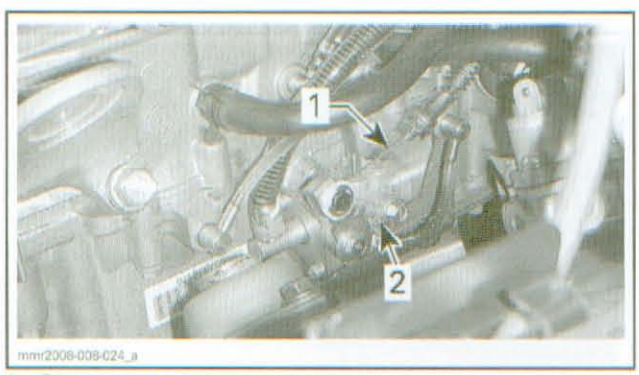

1. *Oil pump cable*
2. *Oil pump*

37. Unplug oil injection inlet hose (hose with a spring) and plug it with an extension (1/4" drive).

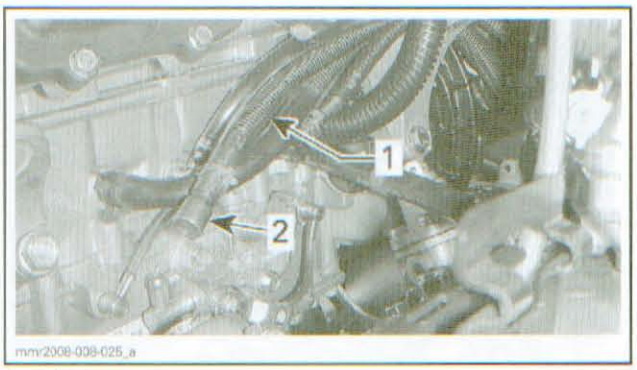

1. *Inlet hose*
2. *Extension*

38. Install a SMALL HOSE PINCHER (P/N 295 000 076) on oil injection outlet hose.

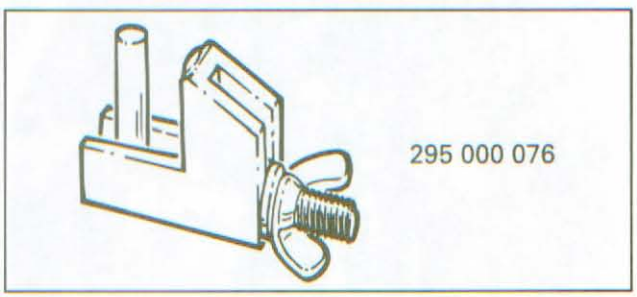

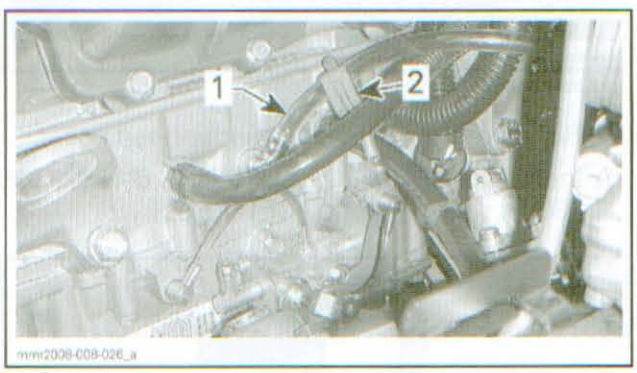

1. *Outlet hose*
2. *Hose pincher*

39. Disconnect the outlet hose.
40. Remove PTO rubber mounts.

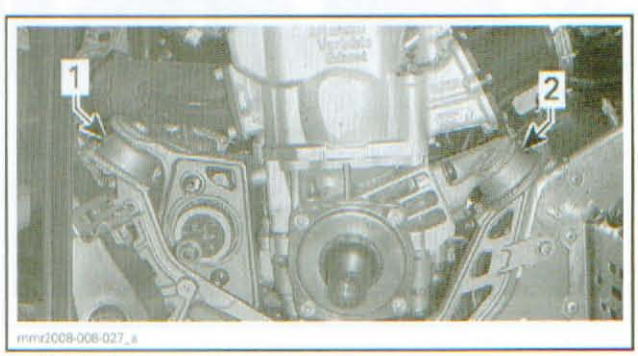

1. *Front rubber mount*
2. *Rear rubber mount*

41. Lift and slide out engine.

www.midwestmanuals.com

Engine Removal

600 HO E-TEC

1. Place vehicle at workstation that will have access to an engine-lifting hoist.
2. Refer to *BODY* section and remove the following:
   - LH and RH side panels
   - Hood
   - Front bottom pan cover.
3. Remove the secondary air intake silencer. Refer to *AIR INTAKE SYSTEM* section.
4. Remove fuel pressure using B.U.D.S. software. Refer to *FUEL TANK AND FUEL PUMP* section.
5. Remove muffler and tuned pipe. Refer to *EXHAUST SYSTEM* section.
6. Remove the drive belt guard support. Refer to *DRIVE BELT* section.
7. Remove the drive pulley. Refer to *DRIVE PULLEY* section.
8. Remove the driven pulley. Refer to *DRIVEN PULLEY AND COUNTERSHAFT* section.
9. Place a drain pan under engine compartment.
10. Disconnect water pump hose to drain engine coolant.

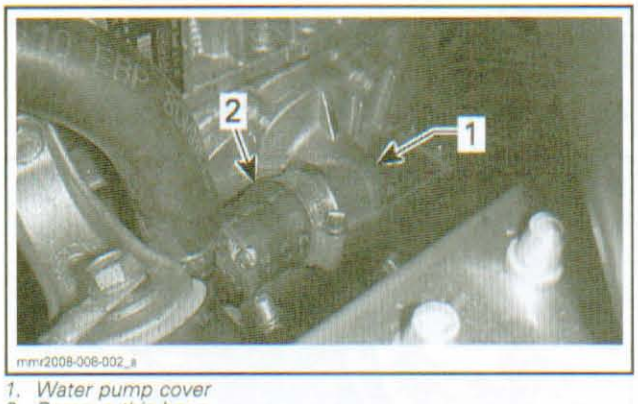

1. *Water pump cover*
2. *Remove this hose*

11. Remove the acoustic panel on the RH side of vehicle.

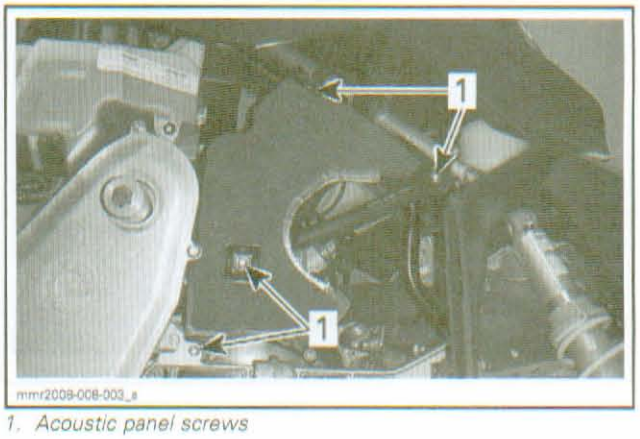

1. *Acoustic panel screws*

12. Remove rewind starter cover screws and place rewind starter housing aside.



1. *Rewind starter cover*

13. Cut locking ties securing coolant hoses and wiring harness to 3D RAVE solenoid support.

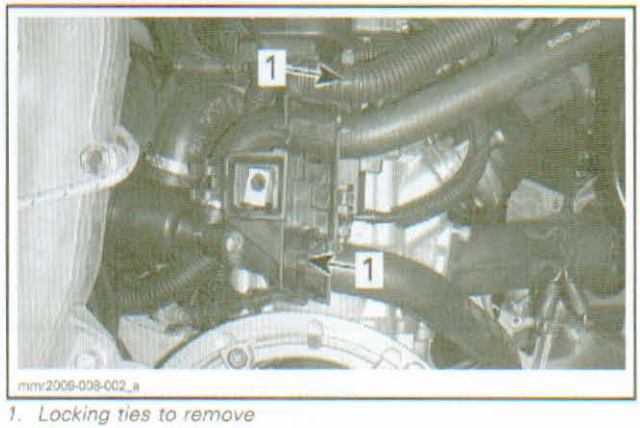

1. *Locking ties to remove*

14. Detach hoses from support.
15. Unplug 3D RAVE solenoid connector.

www.midwestmanuals.com

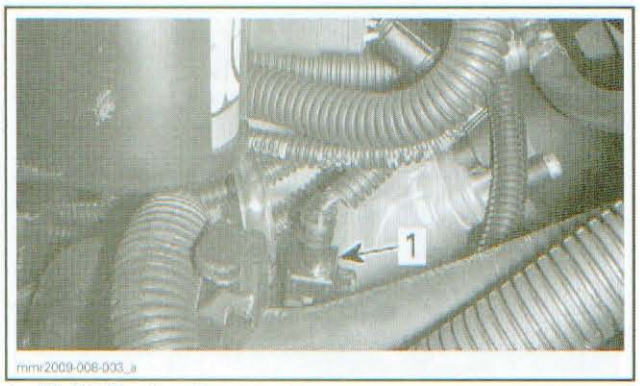

1. *3D RAVE solenoid connector*

16. Unplug trigger coil and magneto connectors.

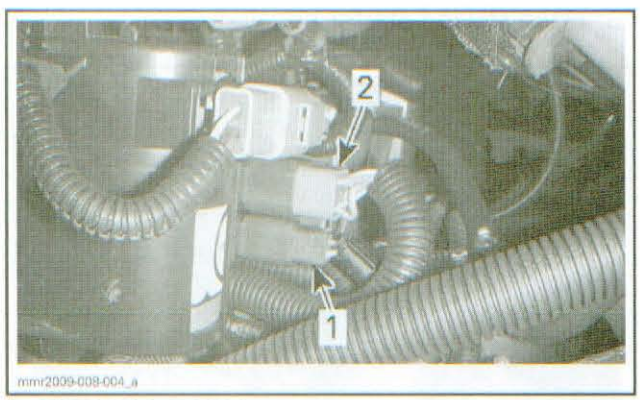

1. *Trigger coil connector*
2. *Magneto connector*

17. Remove and discard screw securing front MAG engine support to front rubber mount.

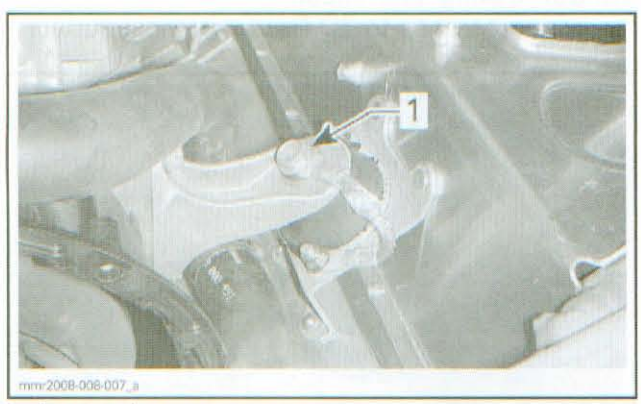

1. *Front engine support screw*

18. Remove the primary air intake silencer. Refer to *AIR INTAKE SYSTEM* section.
19. Remove nuts securing the bottom of countershaft bearing support.

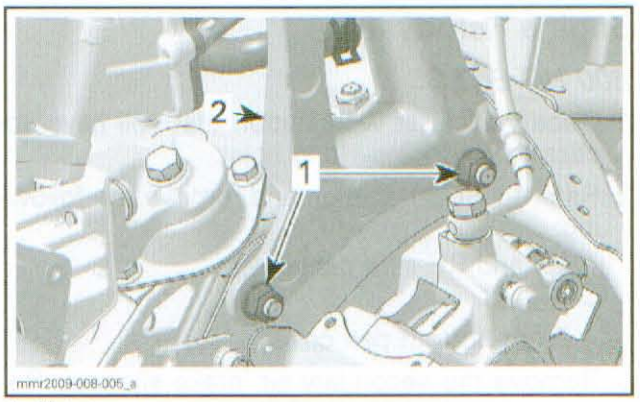

1. *Nuts to remove*
2. *Countershaft bearing support*

20. Remove bolt retaining the top of countershaft bearing support.

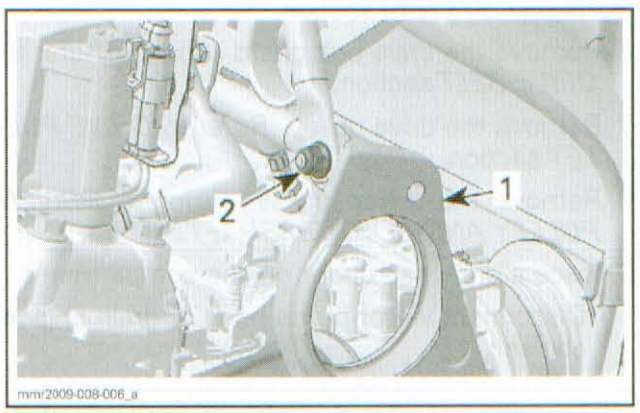

1. *Countershaft bearing support*
2. *Upper bolt*

21. Loosen lower nut located behind support.

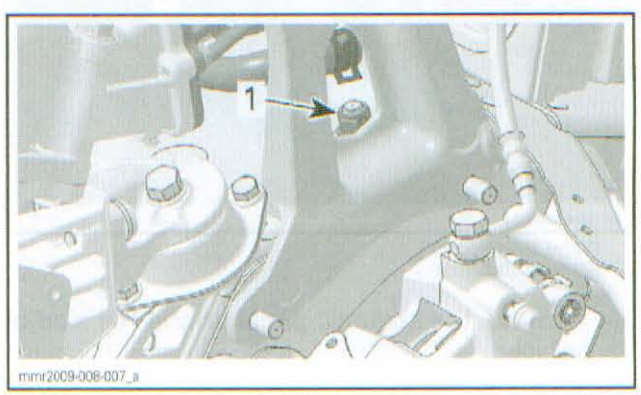

1. *Loosen this nut*

22. Remove the countershaft bearing support.
23. Remove the throttle body heater hose from the cylinder head.

www.midwestmanuals.com



1. Heater hose

24. Unscrew clamps securing throttle body to intake adapters.

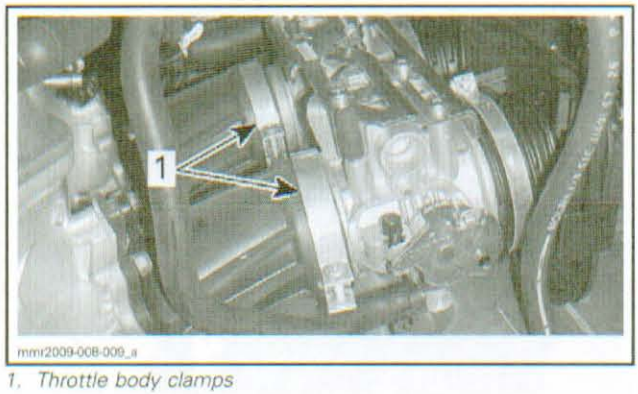

1. Throttle body clamps

25. Move and attach throttle body aside.
26. Unplug spark plug cables.

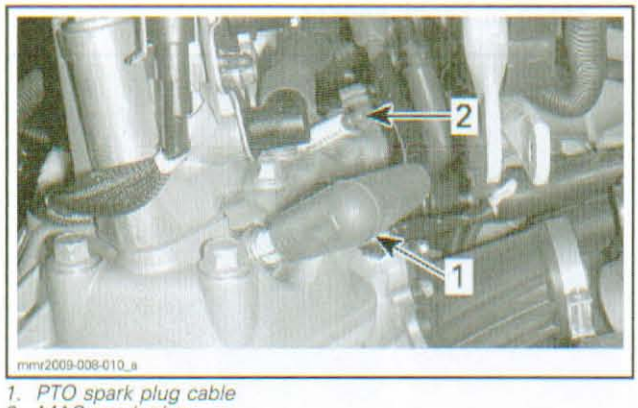

1. PTO spark plug cable
2. MAG spark plug

27. Unplug the coolant temperature sensor (CTS) connector.

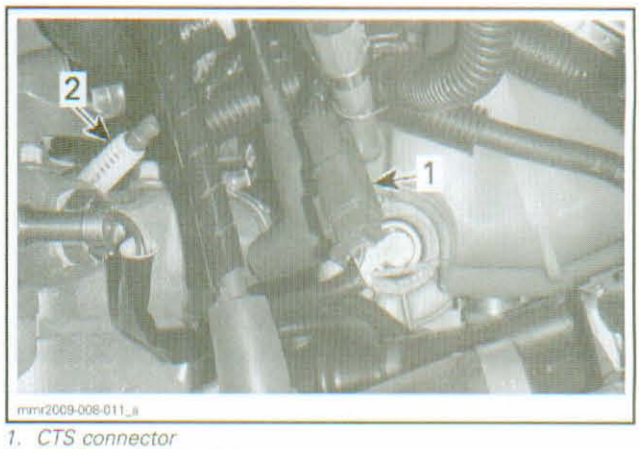

1. CTS connector
2. MAG spark plug

28. Remove and discard screw securing rear MAG engine support to rear rubber mount.
29. Disconnect coolant hose from cylinder head.

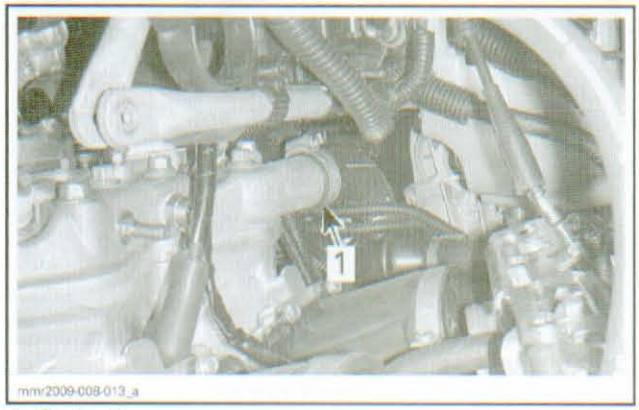

1. Coolant hose

30. Unplug fuel injector connectors.

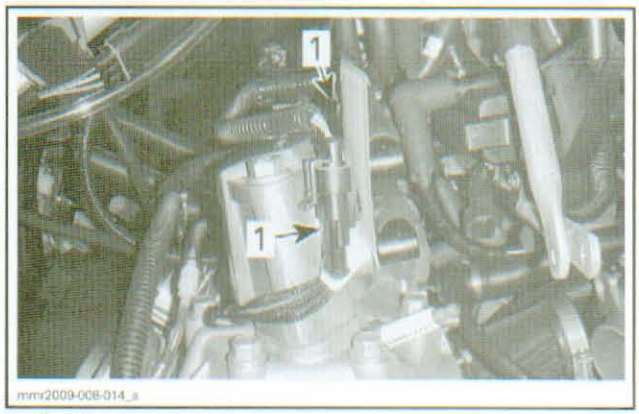

1. Fuel injector connectors

31. Remove screws that attach fuel injector hose retainers to fuel injectors.

www.midwestmanuals.com

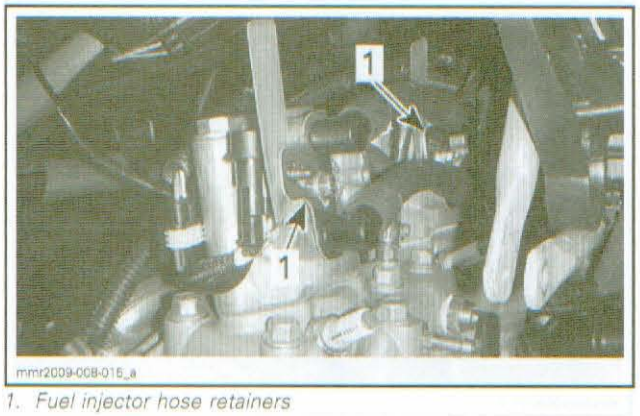

1. Fuel injector hose retainers

32. Place a rag at the bottom of fuel injectors and unplug fuel hoses from fuel injectors.
33. Disconnect the coolant hose on the top of cylinder head.



1. Small coolant hose from coolant reservoir

34. Remove knock sensor from cylinder head.



1. Knock sensor

35. Cut locking tie securing 3D RAVE connector to LH front frame member.

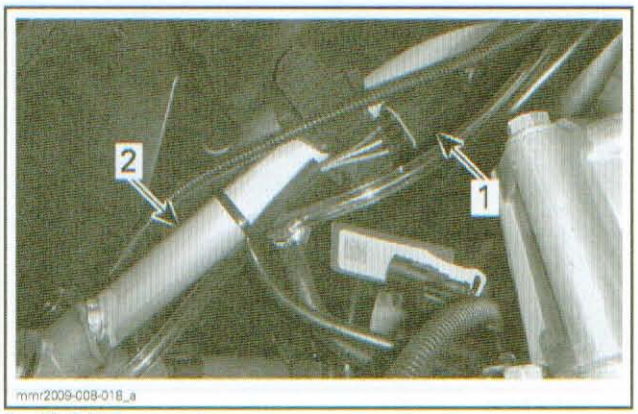

1. 3D RAVE connector
2. LH front frame member

36. Disconnect oil hoses from 3D RAVE valves.

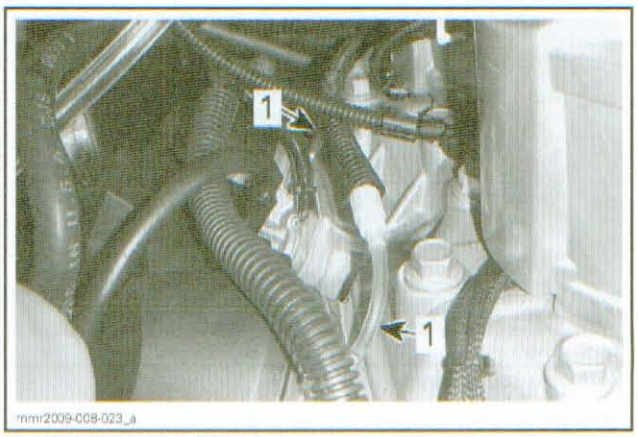

1. 3D RAVE valve oil hoses

37. Install the LIFTING TOOL (P/N 529 036 131) instead of knock sensor.



NOTE: Use knock sensor screw to secure lifting tool on cylinder head.

38. Place the ENGINE REMOVAL HOOK (P/N 529 035 829) into lifting tool rings.

www.midwestmanuals.com





1. *Lifting tool*
2. *Engine removal hook*

39. Remove the engine stopper. Discard screws.

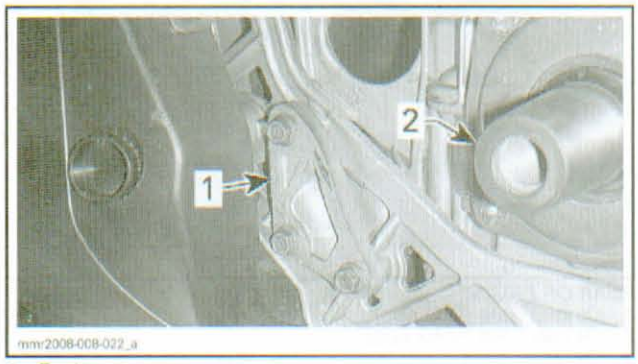

1. *Engine stopper*
2. *Crankshaft*

40. Remove and discard screws securing PTO engine supports to front and rear rubber mounts.

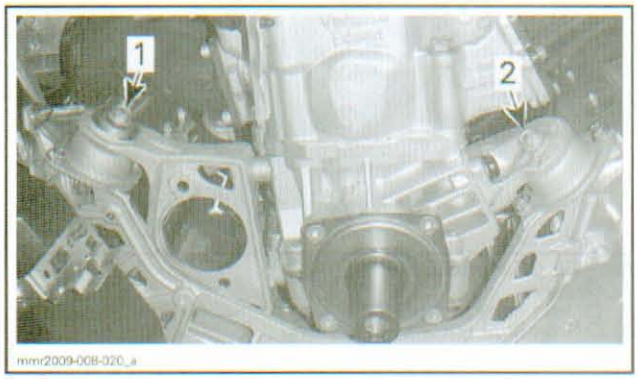

1. *Front engine support screw*
2. *Rear engine support screw*

41. Lift the engine a little.

42. Remove the PTO rear rubber mount.

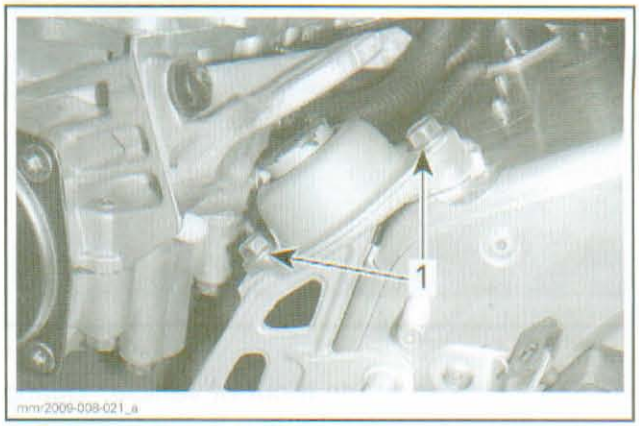

1. *Rubber mount screws*

43. Install a SMALL HOSE PINCHER (P/N 295 000 076) on the oil return hose.

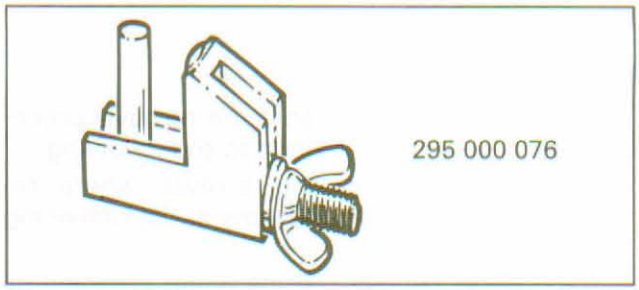

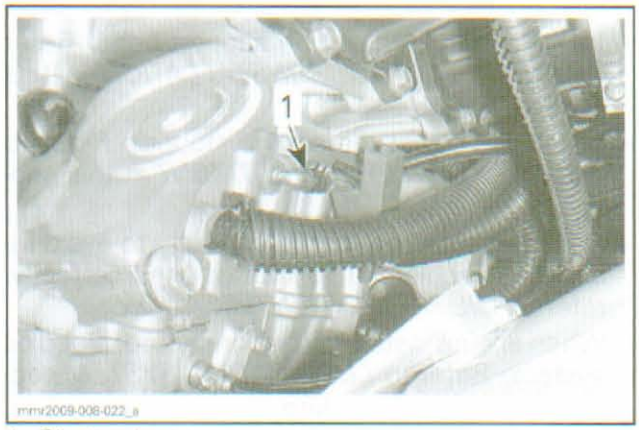

1. *Oil return hose*

44. Disconnect oil inlet hoses from crankcase. Discard the Oetiker clamps.

www.midwestmanuals.com

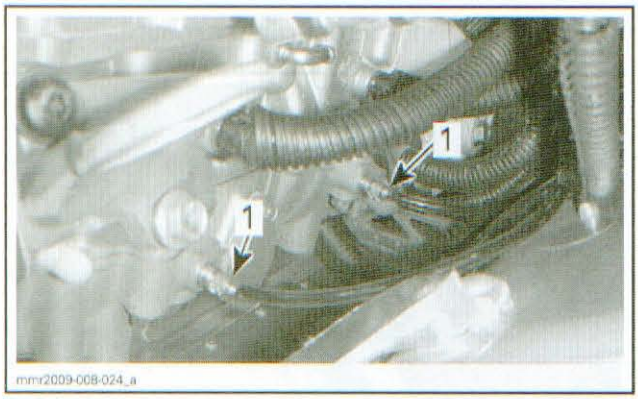

1. Inlet hoses

45. Lift engine and slide it out of vehicle. During this operation pay attention to the following:
46. Do not crush fuel hoses or break fuel hoses adaptors.
47. Do not hit spark plugs against the side frame member.

Engine Installation

To install the engine, reverse the removal procedure. However, pay attention to the following.

- Install **NEW** self-locking screws where required, refer to exploded view at the beginning of this section.
- Install **NEW** Oetiker clamps when installing oil inlet hoses.
- Install and tighten engine support bolts. Refer to *ENGINE SUPPORT INSTALLATION* in this section.
- Install and adjust the engine stopper. Refer to *ENGINE STOPPER ADJUSTMENT* in this section.
- Oil hoses must be routed correctly to avoid lubrication problems. To route hoses correctly, refer to *OIL HOSES IDENTIFICATION*.
- When engine installation is completed, bleed oil system. Refer to *LUBRICATION SYSTEM* section for proper procedure.
- If a new engine is installed or the engine was repaired, premix the fuel with oil (500SS/600/800R) or restart the break-in procedure in B.U.D.S. for the 600 HO E-TEC.

Oil Hoses Identification

500SS/600

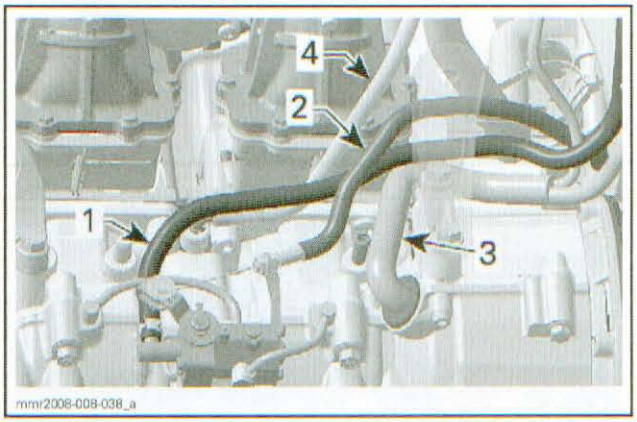

1. Oil injection inlet hose
2. Oil injection pump cable
3. Magneto harness
4. Crankcase vent hose

600 HO E-TEC

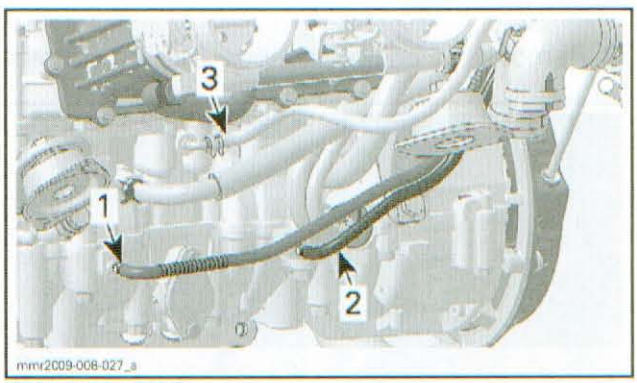

REAR OF ENGINE
1. Oil inlet hose (PTO side)
2. Oil inlet hose (MAG side)
3. Oil return hose

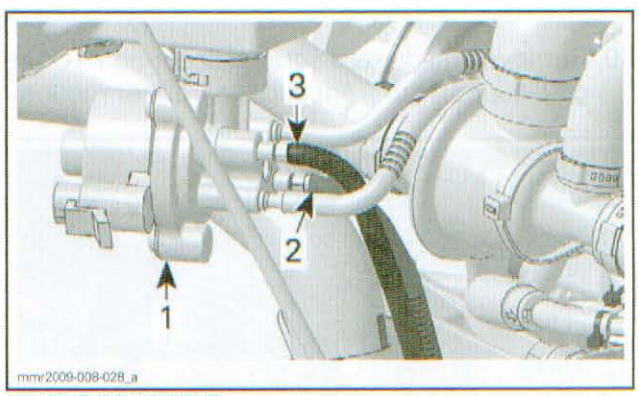

RH SIDE OF VEHICLE
1. Oil pump
2. Oil inlet hose towards PTO fitting
3. Oil inlet hose towards MAG fitting

www.midwestmanuals.com

800R

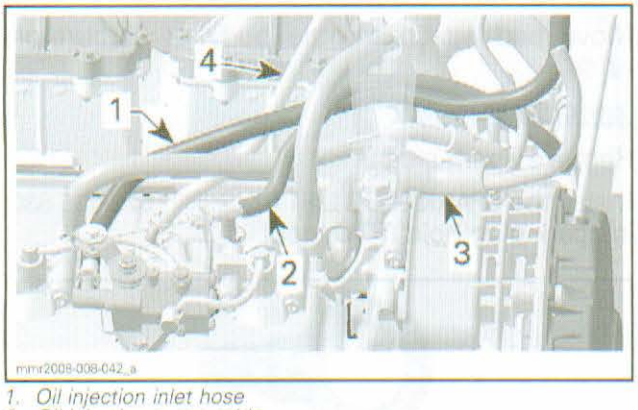

1. *Oil injection inlet hose*
2. *Oil injection pump cable*
3. *Magneto harness*
4. *Crankcase vent hose*

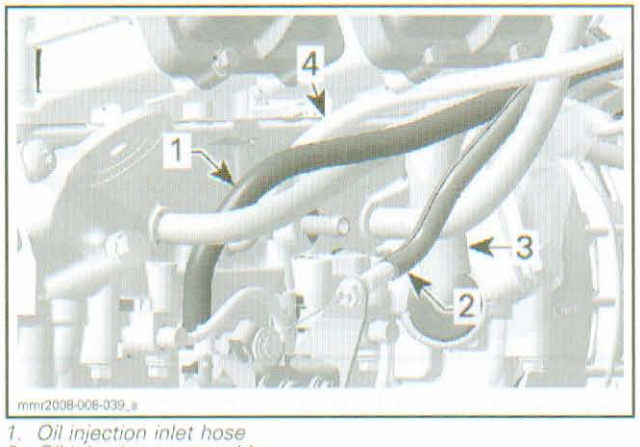

1. *Oil injection inlet hose*
2. *Oil injection pump cable*
3. *Magneto harness*
4. *Crankcase vent hose*

Oil Hoses Identification (3D RAVE Valves)

600 HO E-TEC

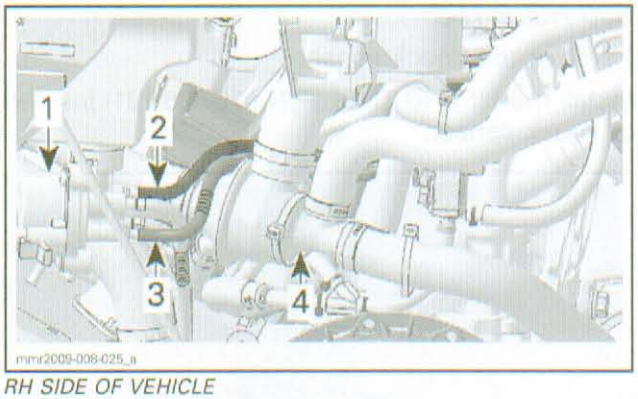

RH SIDE OF VEHICLE
1. *Oil pump*
2. *Towards PTO 3D RAVE valve*
3. *Towards MAG 3D RAVE valve*
4. *Thermostat housing*

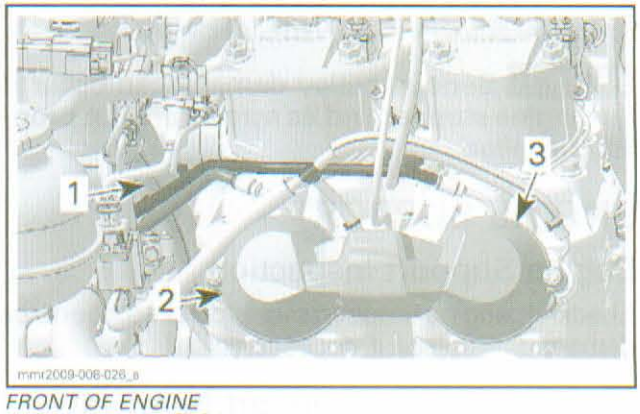

FRONT OF ENGINE
1. *Magneto and CPS harnesses*
2. *MAG 3D RAVE valve*
3. *PTO 3D RAVE valve*

ENGINE STOPPER

Engine Stopper Adjustment

The engine stopper is located on the LH front engine support, in front of the drive pulley.

1. Remove DESS key from post.
2. Remove the LH side panel, refer to *BODY* section.
3. Remove drive belt guard, refer to *DRIVE BELT GUARD REMOVAL* in this section.
4. Loosen the three bolts retaining the engine stopper to the engine support without removing them.

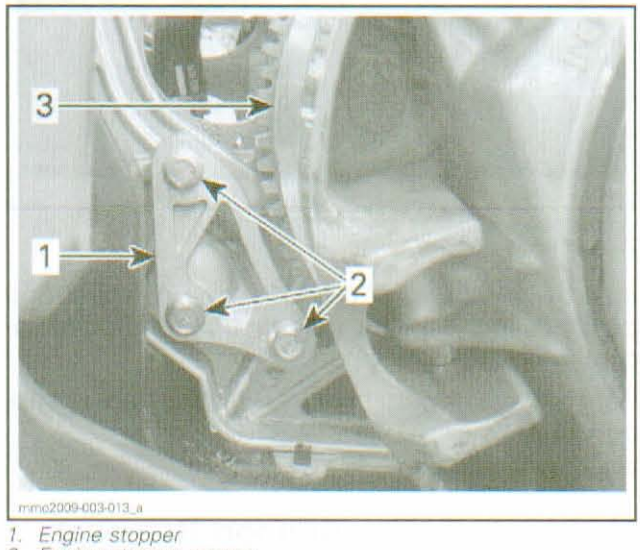

1. *Engine stopper*
2. *Engine stopper screws*
3. *Drive pulley*

5. Apply a downward pressure on the engine stopper with your fingers while tightening the screws just enough to obtain contact between the screw heads and the surface of the stopper.

www.midwestmanuals.com

6. Torque screws to 10 N•m (89 lbf•**in**).

NOTICE Serious pulley damage can occur if the engine stopper and its screws are not properly installed.

ENGINE SUPPORT

Engine Support Inspection

Check if engine supports are cracked, bent or damaged. Replace if necessary.

PTO Side Engine Support Removal (Engine not Removed)

NOTE: On **vehicle with electric starter**, remove the electric starter. Refer to *STARTING SYSTEM* section.

Remove drive and driven pulleys. Refer to *DRIVE PULLEY* and *DRIVEN PULLEY AND COUNTERSHAFT* sections.

Remove the tuned pipe. Refer to *EXHAUST SYSTEM* section.

Remove and discard screws securing PTO engine supports to front and rear rubber mount adapters.

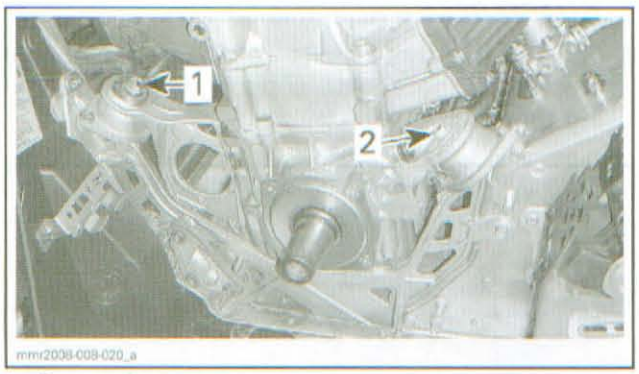

mmr2009-008-020_a

1. *Front engine support screw*
2. *Rear engine support screw*

Insert a pry bar over the LH frame member and gently raise the engine just enough to remove engine weight from support.

Remove and discard screws retaining engine support to engine.

Remove engine support.

MAG Side Engine Support Removal (Engine not Removed)

Remove muffler and tuned pipe. Refer to *EXHAUST SYSTEM* section.

Remove driven pulley. Refer to *DRIVEN PULLEY AND COUNTERSHAFT* section.

Remove the primary air intake silencer. Refer to *AIR INTAKE SYSTEM* section.

Unscrew clamps retaining throttle body or carburetors to intake adapters.

Move and attach throttle body or carburetors aside.

500SS/600/800R

Remove spark plugs.

Install the SPARK PLUG LIFT RING (P/N 529 035 830) in spark plug hole (PTO side).


529035830

Install the ENGINE REMOVAL HOOK (P/N 529 035 829).



Remove and discard screws securing engine supports to rubber mount adapters.

Lift engine.

Remove and discard screws retaining engine support to engine.

Remove engine support.

600 HO E-TEC

Remove the knock sensor.

Install the LIFTING TOOL (P/N 529 036 131) instead of knock sensor.


529036131

www.midwestmanuals.com

NOTE: Use knock sensor screw to secure lifting tool on cylinder head.

Place the ENGINE REMOVAL HOOK (P/N 529 035 829) into lifting tool rings.



Remove and discard screws securing engine supports to rubber mount adapters.

Lift engine.

Remove and discard screws retaining engine support to engine.

Remove engine support.

Engine Support Installation

The installation is the reverse of the removal procedure, however pay attention to the following.

NOTE: Do not forget the adjustment of the engine stopper.

1. Front engine supports (PTO and MAG sides) are secured using a conical washer and a flat washer.

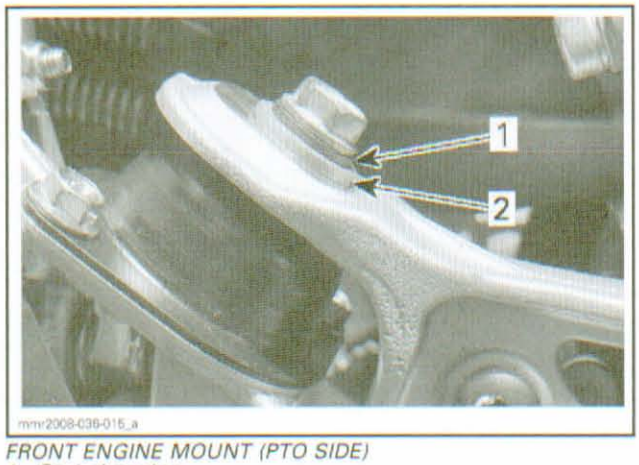

FRONT ENGINE MOUNT (PTO SIDE)
1. Conical washer
2. Flat washer

2. Torque engine supports hexagonal bolts to 25 N•m (18 lbf•ft) using the following sequence.
   - 2.1 Rear engine support (PTO side)
   - 2.2 Rear engine support (MAG side
   - 2.3 Front engine support (PTO side)
   - 2.4 Front engine support (MAG side).

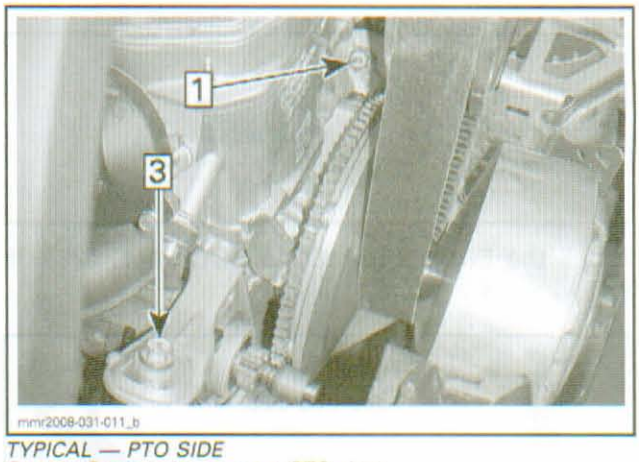

TYPICAL — PTO SIDE
Step 1: Rear engine support (PTO side)
Step 3: Front engine support (PTO side)

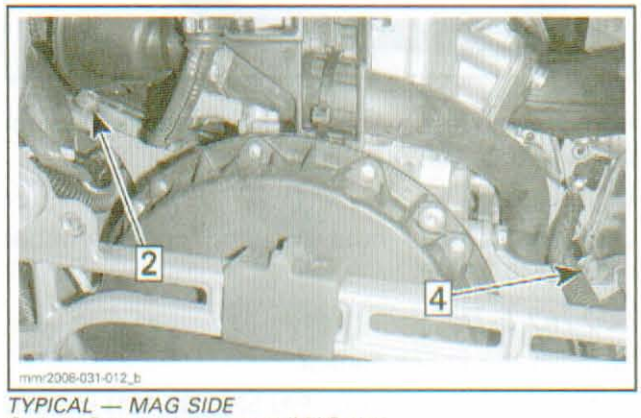

TYPICAL — MAG SIDE
Step 2: Rear engine support (MAG side
Step 4: Front engine support (MAG side)

ENGINE RUBBER MOUNT

Engine Rubber Mount Inspection

Check rubber mounts. Replace them if brittle, cracked or damaged.

Engine Rubber Mount Removal

Remove muffler and tuned pipe. Refer to *EXHAUST SYSTEM* section.

Remove driven pulley. Refer to *DRIVEN PULLEY AND COUNTERSHAFT* section.

Remove the primary air intake silencer. Refer to *AIR INTAKE SYSTEM* section.

Unscrew clamps retaining throttle body or carburetors to intake adapters.

Move and attach throttle body or carburetors aside.

500SS/600/800R

Remove spark plugs.

www.midwestmanuals.com

Install the SPARK PLUG LIFT RING (P/N 529 035 830) in spark plug hole (PTO side).



Install the ENGINE REMOVAL HOOK (P/N 529 035 829).



Remove and discard screws securing engine supports to rubber mount adapters.

Lift engine.

Unscrew bolts or nuts securing engine rubber mounts to frame.

600 HO E-TEC

Remove the knock sensor.

Install the LIFTING TOOL (P/N 529 036 131) instead of knock sensor.



NOTE: Use knock sensor screw to secure lifting tool on cylinder head.

Place the ENGINE REMOVAL HOOK (P/N 529 035 829) into lifting tool rings.



Remove and discard screws securing engine supports to rubber mount adapters.

Lift engine.

Unscrew bolts or nuts securing engine rubber mounts to frame.

Engine Rubber Mount Installation

The installation is the reverse of the removal procedure.

www.midwestmanuals.com

ENGINE LEAK TEST

SERVICE TOOLS

Description	Part Number	Page
INTAKE PLUG	529 036 128	29
MANIFOLD PLUG	529 035 961	29
SMALL HOSE PINCHER	295 000 076	29
VACUUM/PRESSURE PUMP	529 021 800	29

www.midwestmanuals.com

TROUBLESHOOTING

NOTE: This flow chart must be used as a visual reference during the engine leak test procedure.

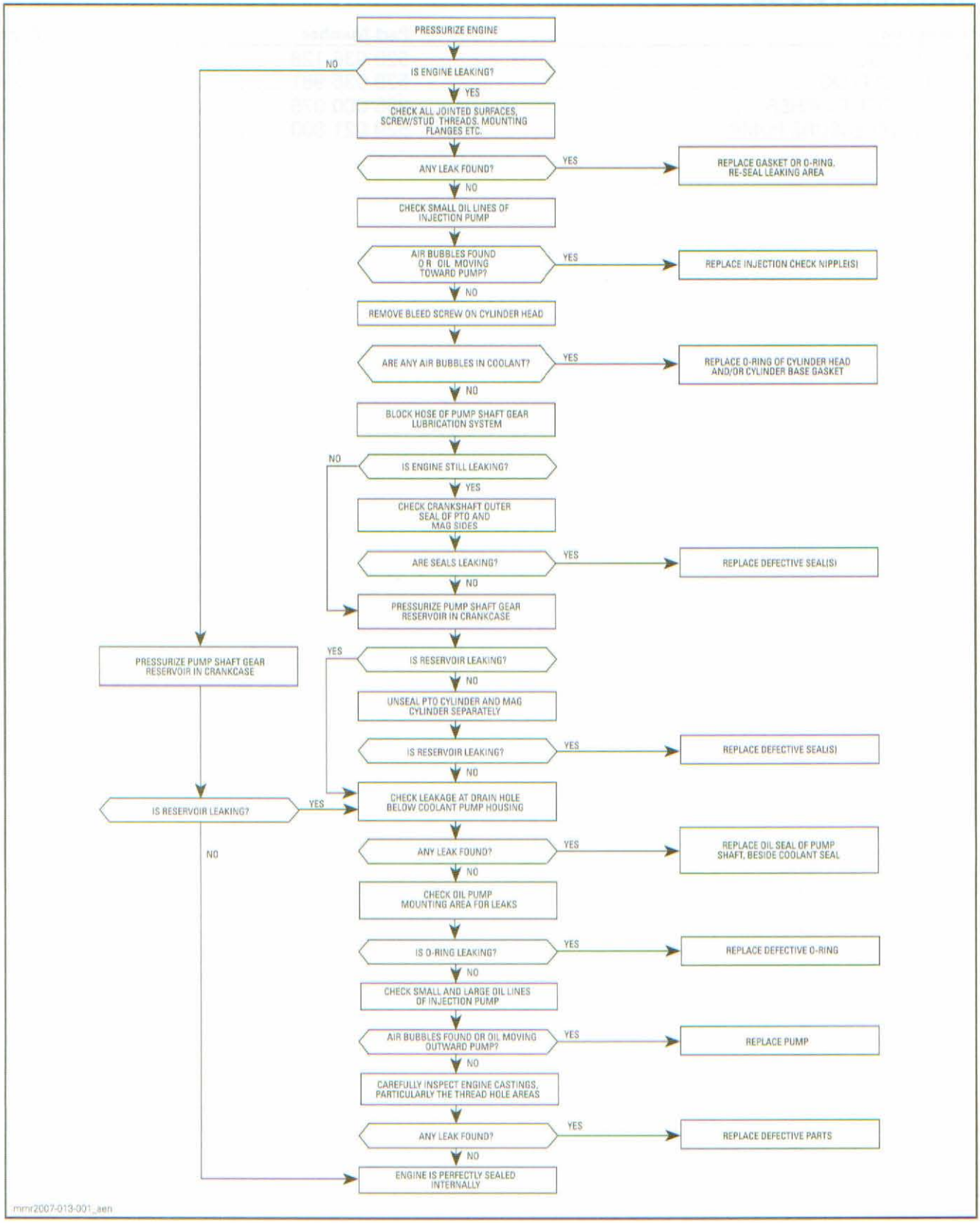

www.midwestmanuals.com

PROCEDURES

ENGINE

Prior to take apart an engine, it is important to proceed with a leak test to diagnose engine problems. Whenever the engine is disassembled, a leak test should be performed after reassembly.

1. Remove engine. Do not remove the exhaust manifold. Refer to *ENGINE REMOVAL AND INSTALLATION* section.
2. Install MANIFOLD PLUG (P/N 529 035 961) over exhaust manifold and secure with a clamp.

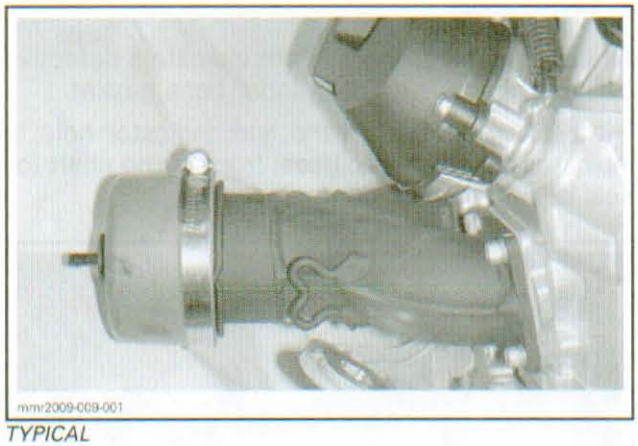

TYPICAL

3. Insert an INTAKE PLUG (P/N 529 036 128) in each intake adaptors. Tighten with existing clamps.

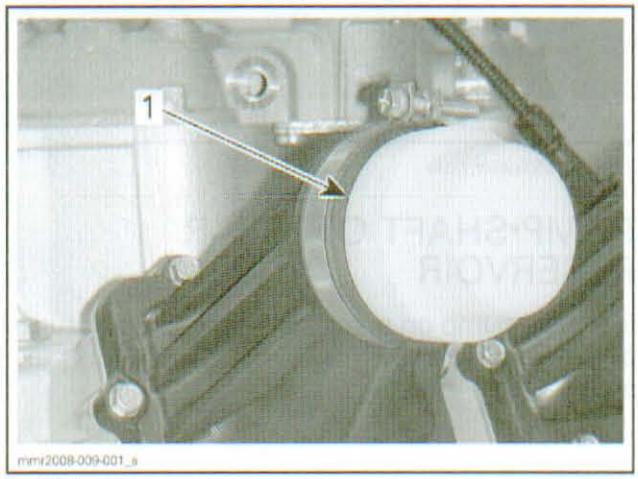

1. Intake plug

4. Using a SMALL HOSE PINCHER (P/N 295 000 076), block each impulse hose as applicable.

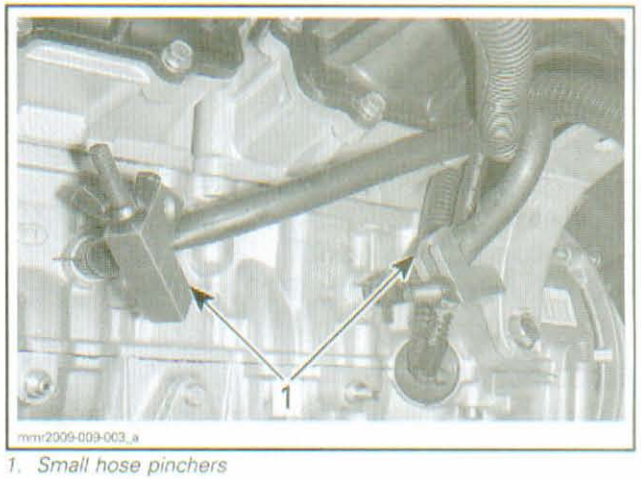

1. Small hose pinchers

NOTICE Pay attention not to squeeze hose nipples.

5. Install VACUUM/PRESSURE PUMP (P/N 529 021 800) on manifold plug.

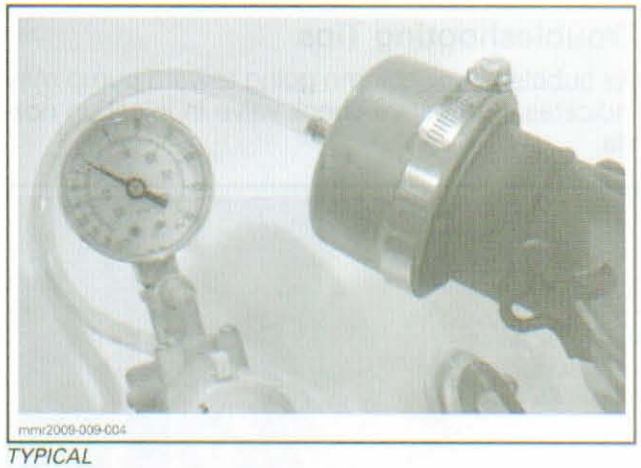

TYPICAL

6. Activate pump and pressurize engine to 34 kPa (5 PSI). Do not exceed this pressure.
7. Engine must stand this pressure during 3 minutes. If pressure drops before 3 minutes, spray a soapy solution on tester kit (manifold and intake plugs, vacuum/pressure pump and its hose).
   - 7.1 If tester kit (manifold and intake plugs, hoses and pump) is leaking, bubbles will indicate where leak comes from.
   - 7.2 If tester kit is not leaking, check engine, see *ENGINE COMPONENTS TO BE VERIFIED*.

Engine Components to be Verified

Leak indicator hole below coolant pump housing.

www.midwestmanuals.com

All jointed surfaces and screw or stud threads of engine:
- Spark plug base, insulator
- Cylinder head
- RAVE valve bellows, piston and housing
- Cylinder
- Crankcase halves (joint)
- Crankshaft outer seals (PTO and MAG)
- Coolant pump housing.

500SS/600/800R
- O-ring of oil injection pump mounting flange
- Coolant bleed screws/plugs.

Verify also the small injection oil lines coming from oil pump.

600 HO E-TEC
- Coolant bleed nipples on cylinder head
- Fuel injector gaskets.

Troubleshooting Tips

Air bubbles or oil column going toward pump may indicates a defective check valve in injection nozzle.

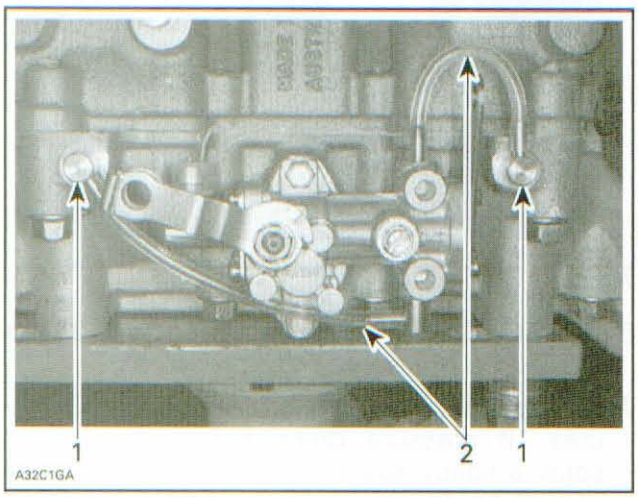

800R ENGINE SHOWN
1. *Injection nipples*
2. *Small injection oil lines*

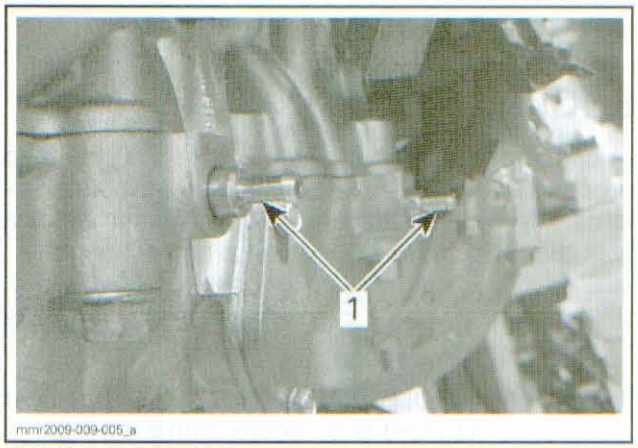

600 HO E-TEC ENGINE
1. *Injection nipples*

Air bubbles in cooling system indicate a defective cylinder head O-ring or cylinder base gasket.

If there is a leak from the leak indicator hole, it indicates a defective oil seal from pump shaft (oil seal behind coolant ceramic seal).

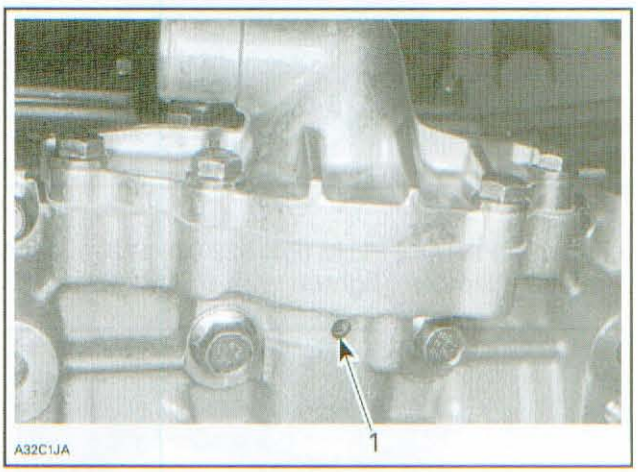

1. *Leak indicator hole*

PUMP SHAFT OIL GEAR RESERVOIR

Install air pump on reservoir fitting and pressurize engine to 34 kPa (5 PSI). Do not exceed this pressure.

www.midwestmanuals.com

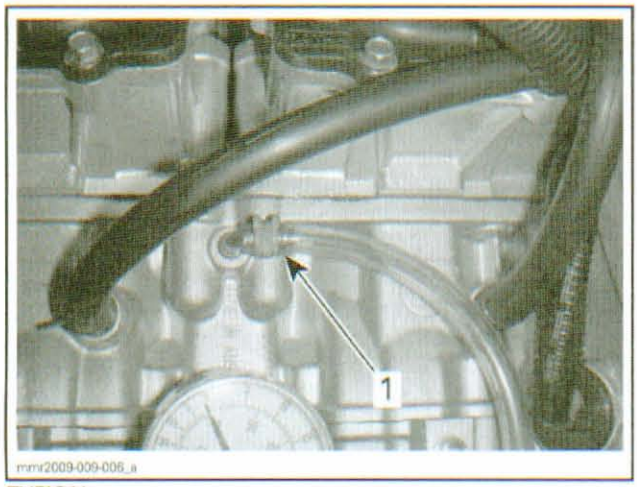

TYPICAL
1. Air pump hose on fitting

If pressure drops, it indicates a defective crankshaft inner seal or a defective oil seal either on water pump side or oil pump side.

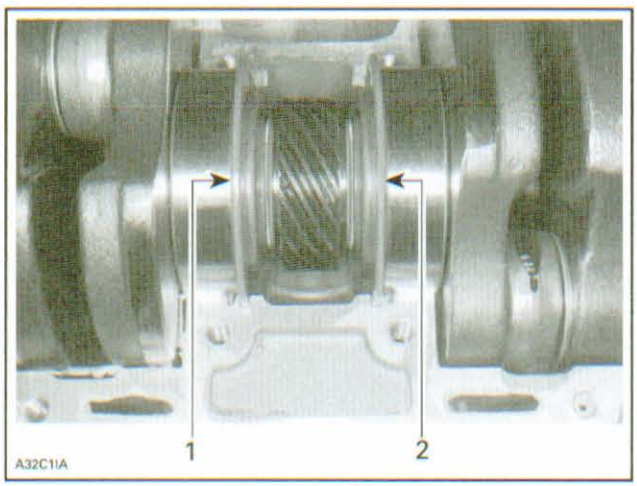

TYPICAL — CRANKCASE INSIDE VIEW
1. Leakage through inner seal on PTO side
2. Leakage through inner seal on MAG side

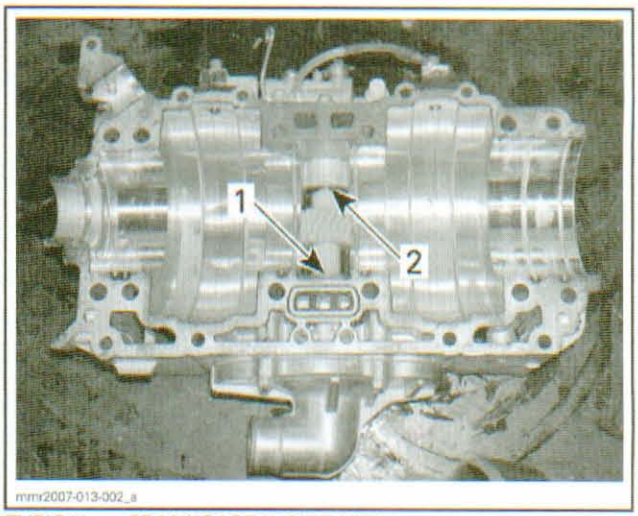

TYPICAL — CRANKCASE INSIDE VIEW
1. Leakage through water pump seal (reservoir side)
2. Leakage on oil pump side (seal or O-ring)

www.midwestmanuals.com

www.midwestmanuals.com

ENGINE MEASUREMENT

SERVICE TOOLS

Description	Part Number	Page
DEGREE WHEEL	529 035 607	37–38
DIAL INDICATOR	414 104 700	37–38
DIAL INDICATOR ADAPTER KIT	529 036 132	39

PROCEDURES

NOTE: This subsection explains the procedures to correctly measure engine components. For the engine technical specifications, refer to *INSPECTION* in the appropriate *ENGINE* subsection.

CYLINDER HEAD WARPAGE

1. Check gasket mating surface of the cylinder head with a straight edge and a feeler gauge. Make sure part is within the given specification.
2. If cylinder head is out of specification, replace it.
3. Verify combustion chamber volume to use the correct cylinder base gasket with the new part.

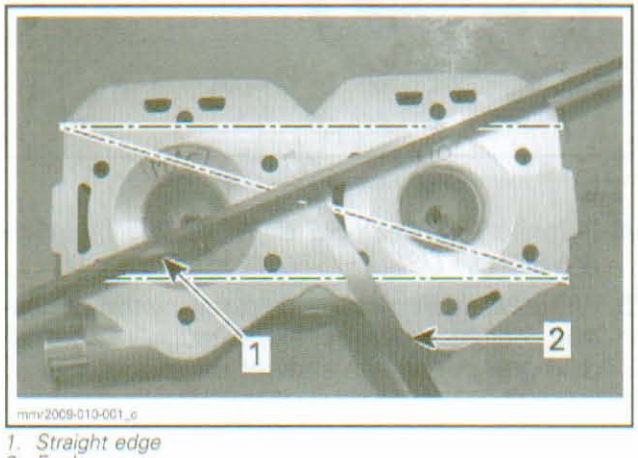

1. *Straight edge*
2. *Feeler gauge*

CYLINDER TAPER

1. Measure cylinder diameter in the following locations:
   - Above exhaust port
   - Below intake port.
2. Compare cylinder diameters.
3. If the difference exceeds the specified dimension, the cylinder should be rebored and honed or should be replaced. Nikasil cylinder can be honed using diamond hone but can not be rebored.

NOTE: Be sure to restore the chamfer around all cylinder sleeve port openings.

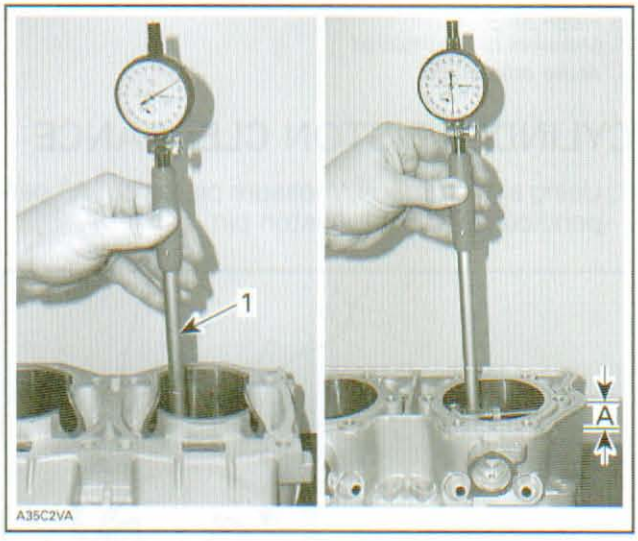

1. *Below the intake port*
A. *Above exhaust port*

CYLINDER OUT OF ROUND

1. Measuring above exhaust port with a cylinder gauge, check if the cylinder out of round is more than the specified dimension.
2. If larger, cylinder should be rebored and honed or should be replaced. Nikasil cylinder can be honed using diamond hone but cannot be rebored.

NOTE: Be sure to restore the chamfer around all cylinder sleeve port openings.

www.midwestmanuals.com

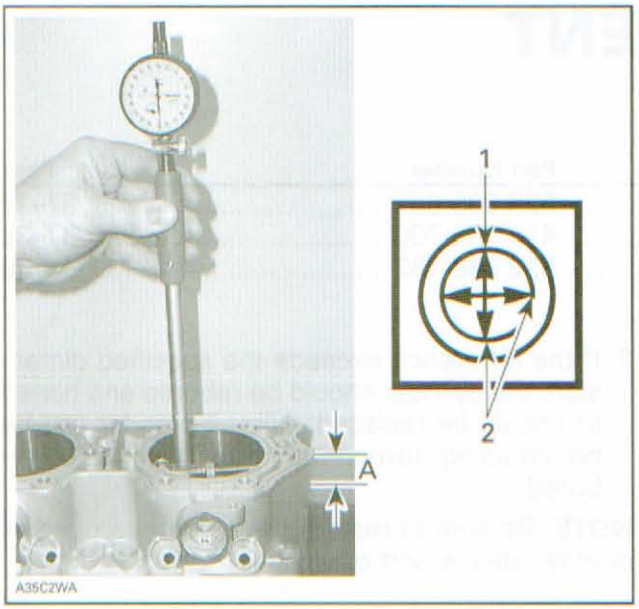

1. Piston pin position
2. Measures to be compared
A. Above exhaust port

CYLINDER/PISTON CLEARANCE

1. Using a micrometer, measure piston at "A" perpendicularly (90°) to piston pin.

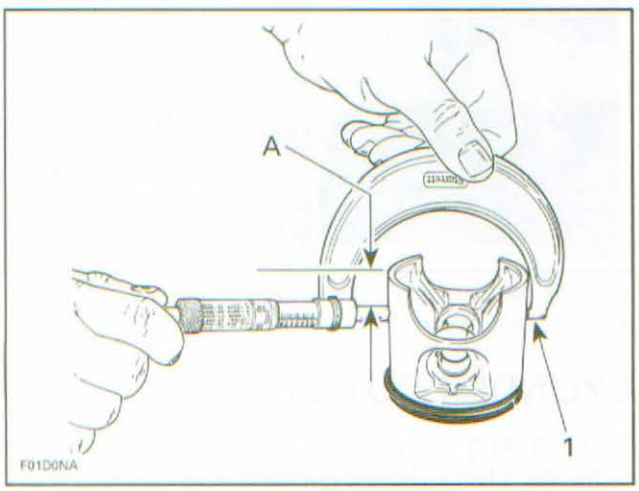

TYPICAL
1. Measuring perpendicularly (90°) to piston pin axis
A. 15 mm (.591 in)

2. The measured dimension must not be less than 0.15 mm (.006 in) of the one scribed on piston dome. Otherwise, install a new piston.

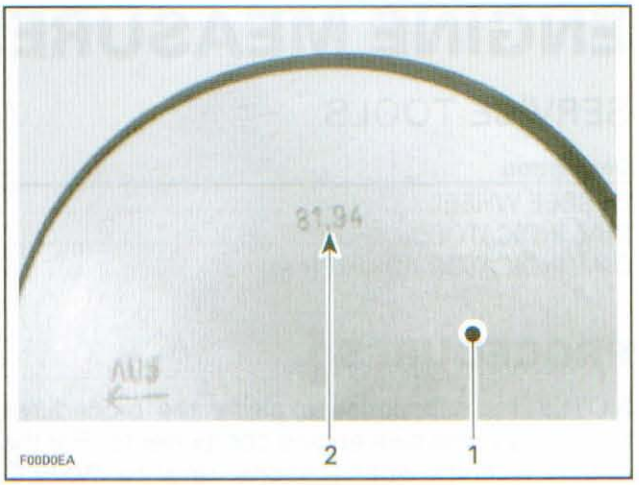

TYPICAL
1. Piston dome
2. Piston measurement

3. If piston is within tolerance, adjust and lock a micrometer to the piston dimension.

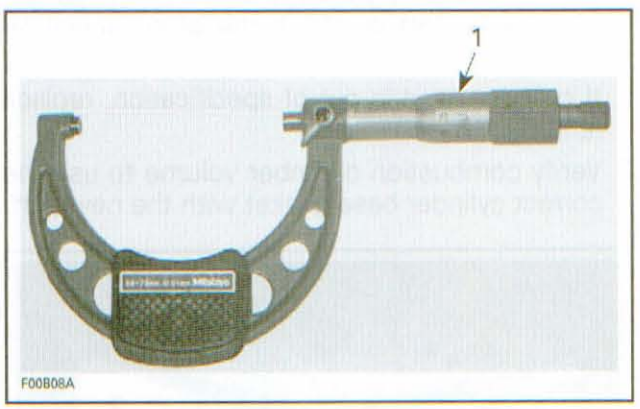

1. Micrometer set to the piston dimension

4. Refer to *PROCEDURE CONTINUATION WITH A NEW OR USED PISTON* further.
5. With the micrometer set to the piston dimension, adjust a cylinder bore gauge to the micrometer dimension and set the indicator to 0.

www.midwestmanuals.com

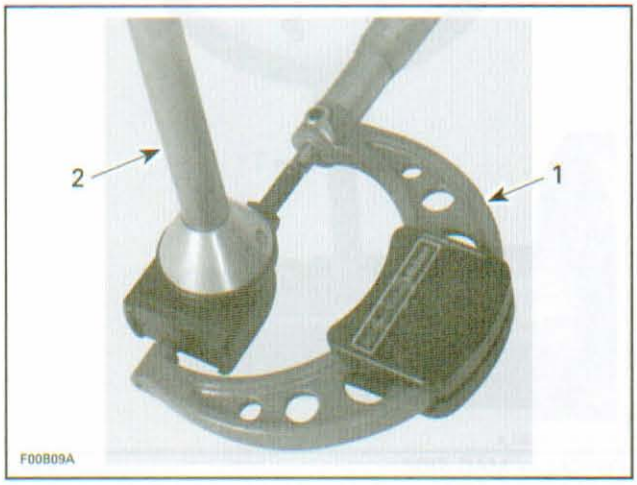

1. Use the micrometer to set the cylinder bore gauge
2. Dial bore gauge



1. Indicator set to 0 (zero)

NOTE: Make sure the cylinder bore gauge indicator is set exactly at the same position as with the micrometer, otherwise the reading will be false.

6. Position the dial bore gauge above the exhaust port.
7. IMPORTANT: Always remove cylinder-block from crankcase before measuring.

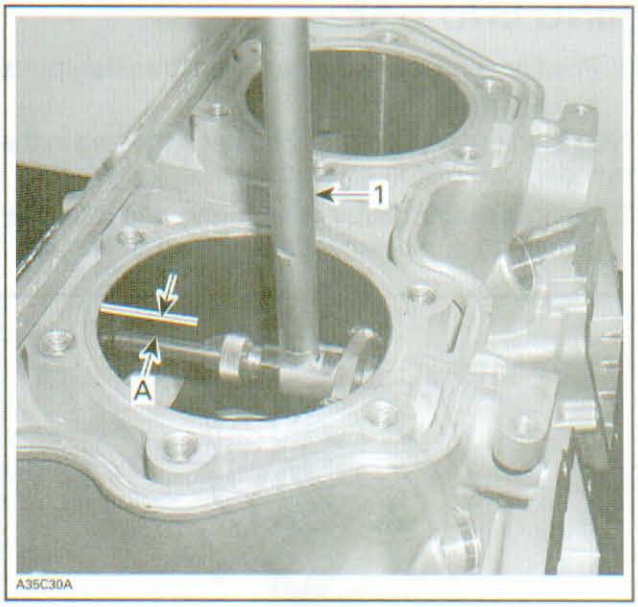

1. Measuring perpendicularly (90°) to piston pin axis
A. Above exhaust port

8. Read the measurement on the cylinder bore gauge. The result is the exact piston/cylinder wall clearance. If clearance exceeds specified tolerance, replace cylinder and piston.

NOTE: Oversize pistons are available for the 593 engine only.

RING/PISTON GROOVE CLEARANCE

1. Using a feeler gauge check clearance between rectangular ring and groove.
2. Replace piston if clearance exceeds specified tolerance.



www.midwestmanuals.com

RING END GAP

1. Position ring halfway between transfer ports and intake port.

NOTE: In order to correctly position the ring in the cylinder, use piston as a pusher.

2. Using a feeler gauge, check ring end gap. Replace ring if gap exceeds specified tolerance.

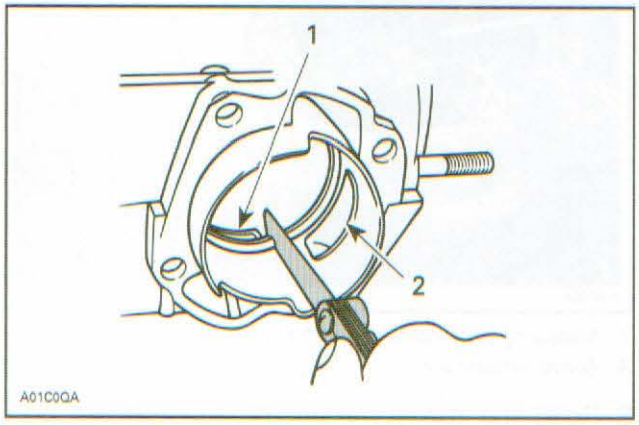

TYPICAL
1. *Transfer port*
2. *Intake port*

CRANKSHAFT DEFLECTION

Measuring in Crankcase

1. Using a dial indicator, check deflection with crankshaft in crankcase.

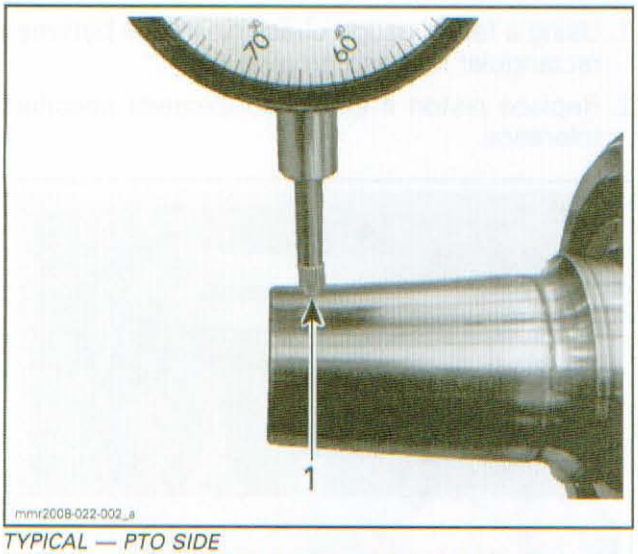

TYPICAL — PTO SIDE
1. *Measure deflection 3 mm (1/8 in) from crankshaft end*

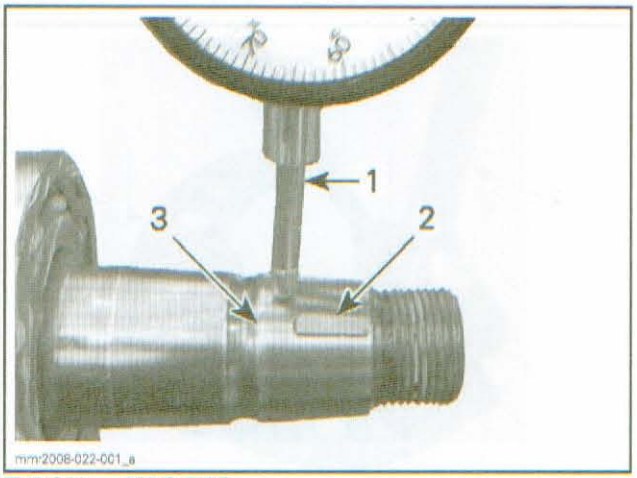

TYPICAL — MAG SIDE
1. *Measure deflection at mid point between key and groove*
2. *Key*
3. *Groove*

2. If deflection exceeds the specified tolerance, recheck deflection using V-shaped blocks to determine the defective part(s). See *MEASURING ON BENCH*.

Measuring on Bench

1. Once engine is disassembled, check crankshaft deflection on V-shaped blocks.

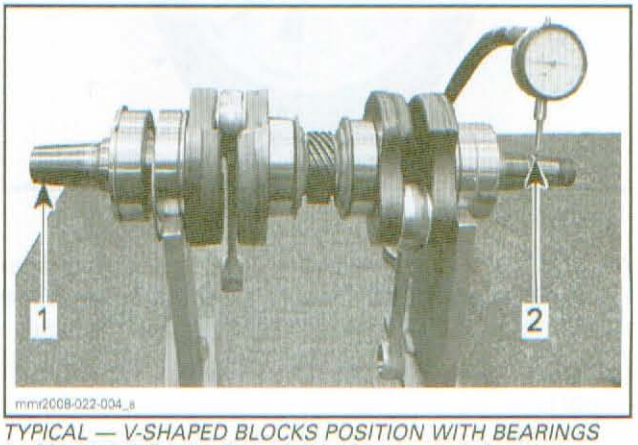

TYPICAL — V-SHAPED BLOCKS POSITION WITH BEARINGS
1. *Measure deflection 3 mm (1/8 in) from crankshaft end*
2. *Measure deflection at mid point between key and groove*

www.midwestmanuals.com

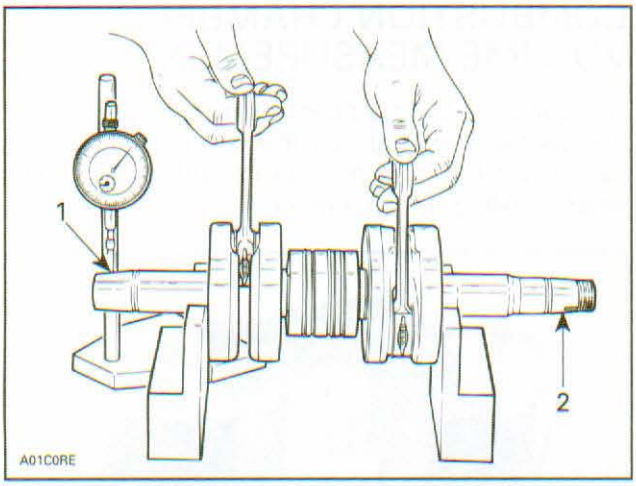

TYPICAL — V-SHAPED BLOCKS POSITION WITHOUT BEARINGS
1. *Measure deflection 3 mm (1/8 in) from crankshaft end*
2. *Measure deflection at mid point between key and groove*

NOTE: Crankshaft deflection cannot be correctly measured between centers of a lathe.

2. If deflection exceeds the specified tolerance, it can be worn bearings or a bent crankshaft.
3. Remove crankshaft bearings and check deflection again on V-shaped blocks to determine the defective part(s).
4. If the deflection exceeds the specified tolerance, crankshaft should be repaired or replaced.

CONNECTING ROD BIG END AXIAL PLAY

1. Using a feeler gauge, measure distance between thrust washer and crankshaft counterweight.
2. If the distance exceeds specified tolerance, repair or replace the crankshaft.

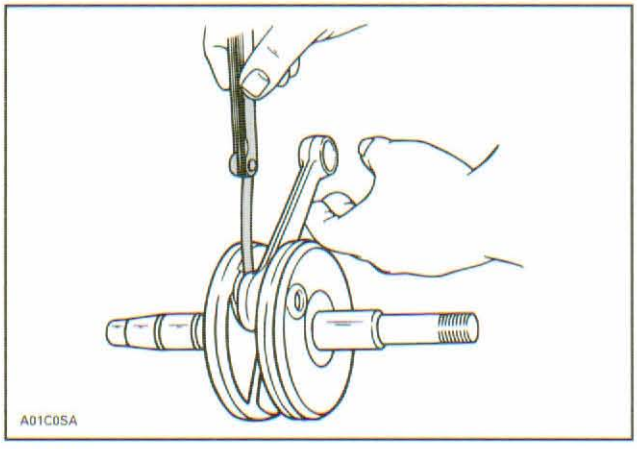

TYPICAL

CRANKSHAFT ALIGNMENT

All Engines except 593 HO E-TEC

1. Remove both spark plugs.
2. Install the DIAL INDICATOR (P/N 414 104 700) in spark plug hole on MAG side.

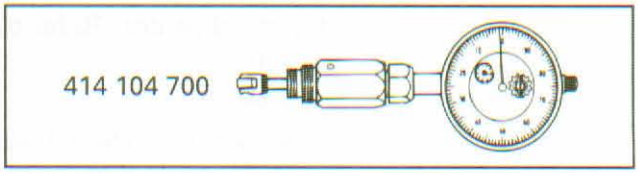

3. Bring MAG piston at top dead center.
4. Scribe a mark on crankcase.
5. Install DEGREE WHEEL (P/N 529 035 607) on crankshaft end so that 360° mark aligns with the mark on crankcase. Do not rotate crankshaft.

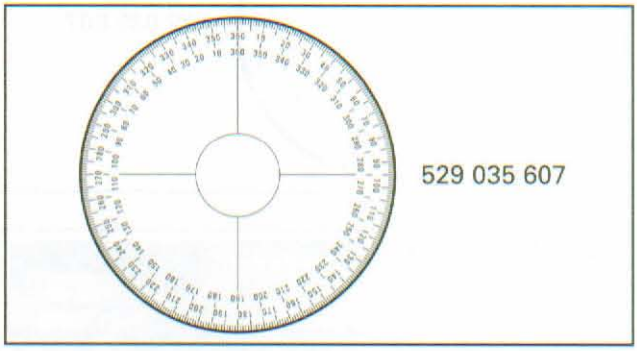

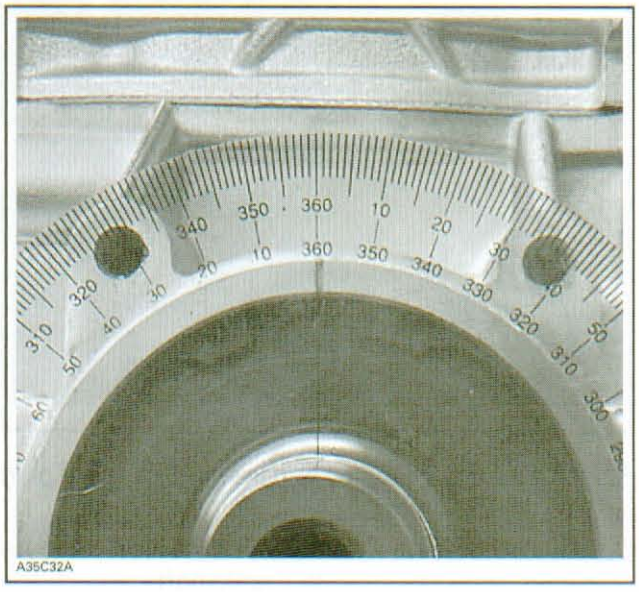

6. Remove dial indicator and install it in spark plug hole on PTO side.
7. Bring PTO piston to top dead center. Degree wheel must rotate with crankshaft.

www.midwestmanuals.com

8. Interval between cylinders must be 180° ± 0.5.
9. Any other reading indicates a misaligned (twisted) crankshaft.

593 HO E-TEC Engines

1. Remove injectors. Refer to *E-TEC DIRECT FUEL INJECTION* section.
2. Bring MAG piston at top dead center. Refer to *IGNITION SYSTEM* section.
3. Scribe a mark on crankcase.
4. Install the DEGREE WHEEL (P/N 529 035 607) on crankshaft end so that 360° mark aligns with the mark on crankcase. Do not rotate crankshaft.

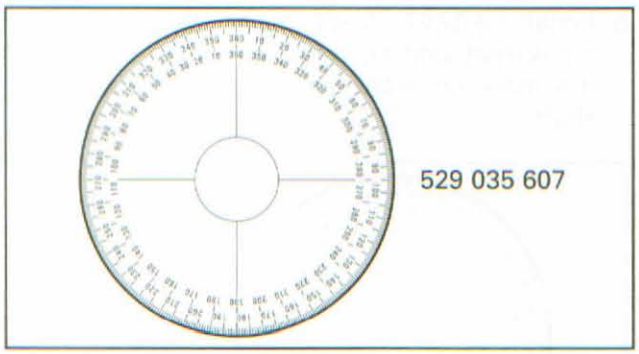

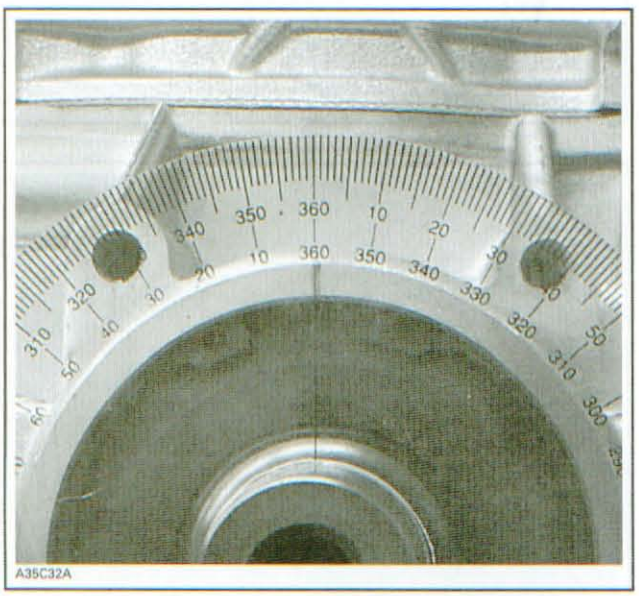

5. Remove dial indicator and install it in spark plug hole on PTO side.
6. Bring PTO piston to top dead center. Degree wheel must rotate with crankshaft.
7. Interval between cylinders must be 180° ± 0.5.
8. Any other reading indicates a misaligned (twisted) crankshaft.

COMBUSTION CHAMBER VOLUME MEASUREMENT

The combustion chamber volume is the region in the cylinder head above the piston at Top Dead Center (TDC). It is measured with the cylinder head installed on the engine.

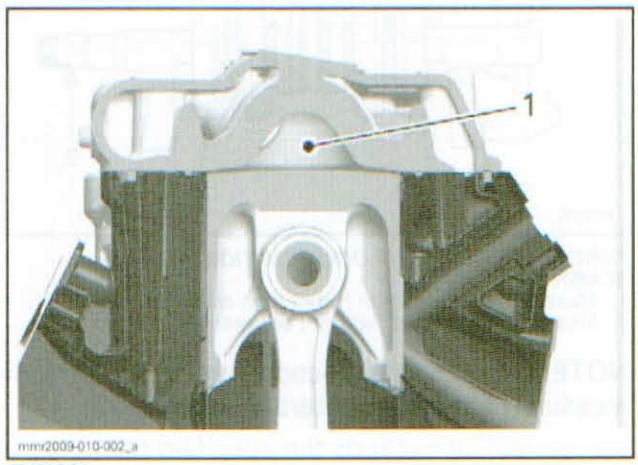

TYPICAL
1. Combustion chamber

NOTE: When checking the combustion chamber volume, engine must be cold, piston must be free of carbon deposits and cylinder head must be leveled.

Engine Preparation

593 and 797 Engines

1. Remove both spark plugs and bring one piston to Top Dead Center using the DIAL INDICATOR (P/N 414 104 700).

www.midwestmanuals.com

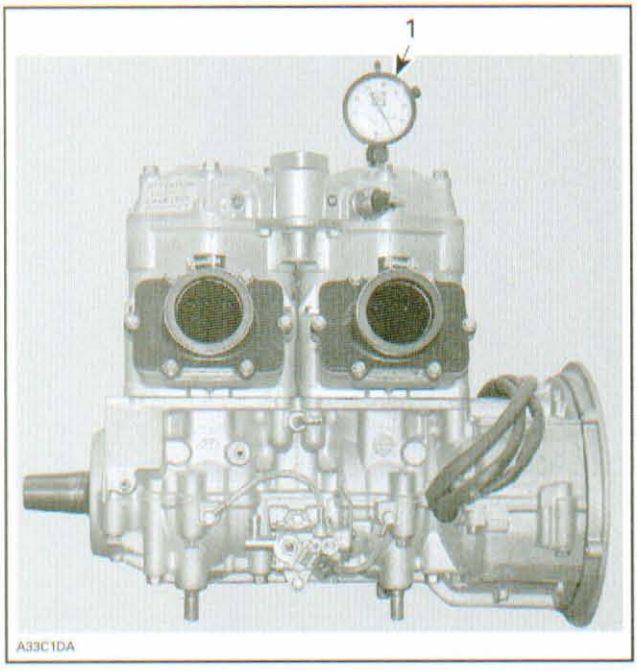

1. *Bring piston to TDC*

2. Remove cylinder head cover. Refer to *TOP END* section.
3. Apply on piston ring end gap a dab of grease to seal it (piston to TDC). Wipe all excess with your finger.
4. Reinstall cylinder head cover.

593 HO E-TEC Engines

1. Remove fuel injectors. Refer to *E-TEC DIRECT FUEL INJECTION* section.
2. Install the DIAL INDICATOR ADAPTER KIT (P/N 529 036 132) on cylinder head and bring the piston to TDC. Refer to *IGNITION SYSTEM* section for complete procedure.
3. Remove cylinder head. Refer to *TOP END* section.
4. Apply on piston ring end gap a dab of grease to seal it. Wipe all excess with your finger.
5. Reinstall cylinder head.
6. Make sure spark plugs are installed and tightened.

Measurement

NOTE: When measuring, remember that 1 ml = 1 cc.

1. Obtain a graduated burette (capacity 0 - 50 ml) and fill with mineral injection oil.

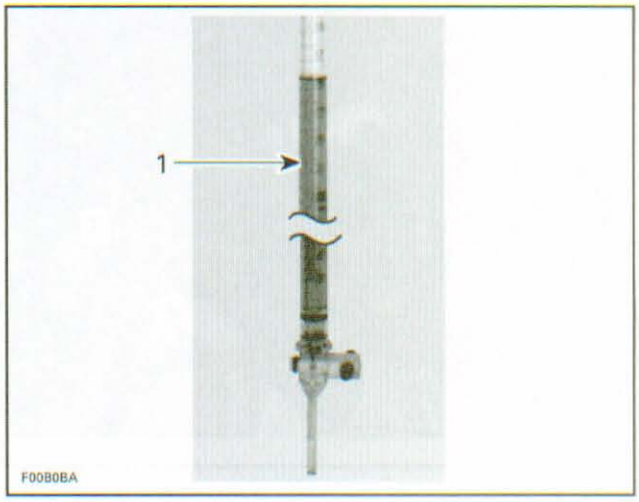

1. *Graduated burette (0 - 50 ml)*

2. Open burette valve to fill its tip then close valve.
3. Let oil settle in burette then add oil until level reaches 0 ml.
4. Inject the burette content in combustion chamber then close burette valve.
   4.1 On **593 and 797 engines**, add burette content until oil touches the top spark plug hole then close burette valve.

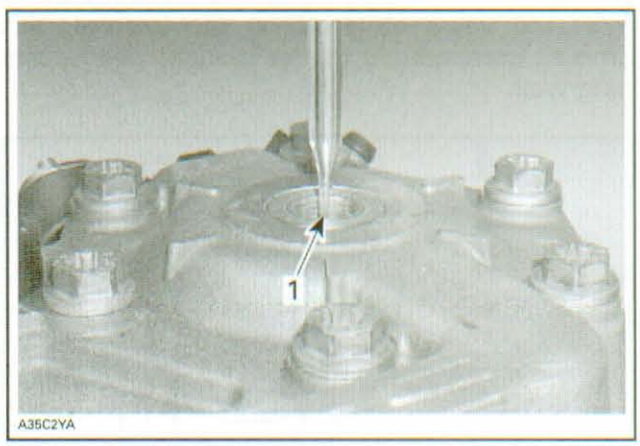

1. *Top of spark plug hole*

   4.2 On **593 HO E-TEC engines**, add burette content until oil touches the bottom of the injector hole (smaller diameter).

www.midwestmanuals.com

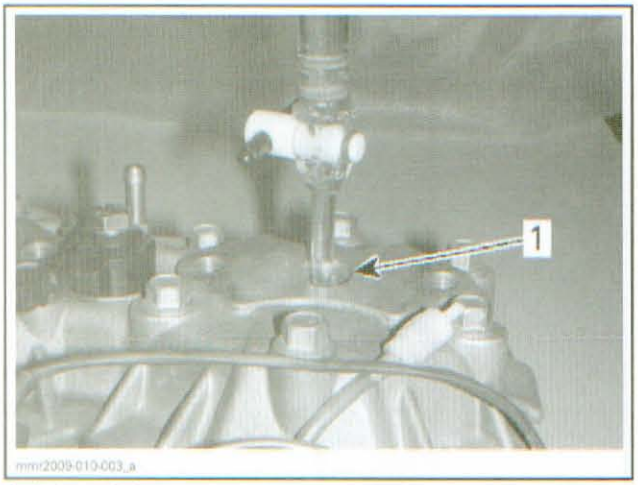

1. Injector hole

NOTE: The oil level in cylinder must not drop for a few seconds after filling. If so, there is a leak between piston and cylinder. The recorded volume would be false. Repair engine then repeat procedure.

5. Let burette stand upward for about 10 minutes, until oil level is stabilized.
6. Read the burette scale to obtain the quantity of oil injected in the combustion chamber.

NOTE: On **593 and 797 engines**, deduct 2.25 ml from the value obtained on the burette, this amount corresponds to the cylinder head spark plug well.

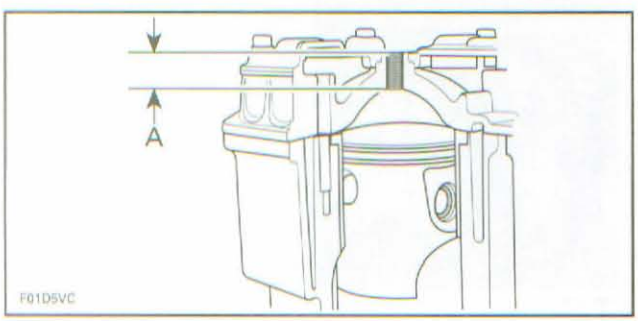

TYPICAL
A. Spark plug well

7. Repeat the complete procedure for the other cylinder.
8. When completed, compare cylinders measurement with specified tolerances.
9. If necessary, install a thicker or thinner gasket between cylinder and crankcase in order to obtain the specified combustion chamber volume.
10. Repeat procedure until specified tolerances are obtained.

www.midwestmanuals.com

AIR INTAKE SYSTEM

500SS, 600 and 800R

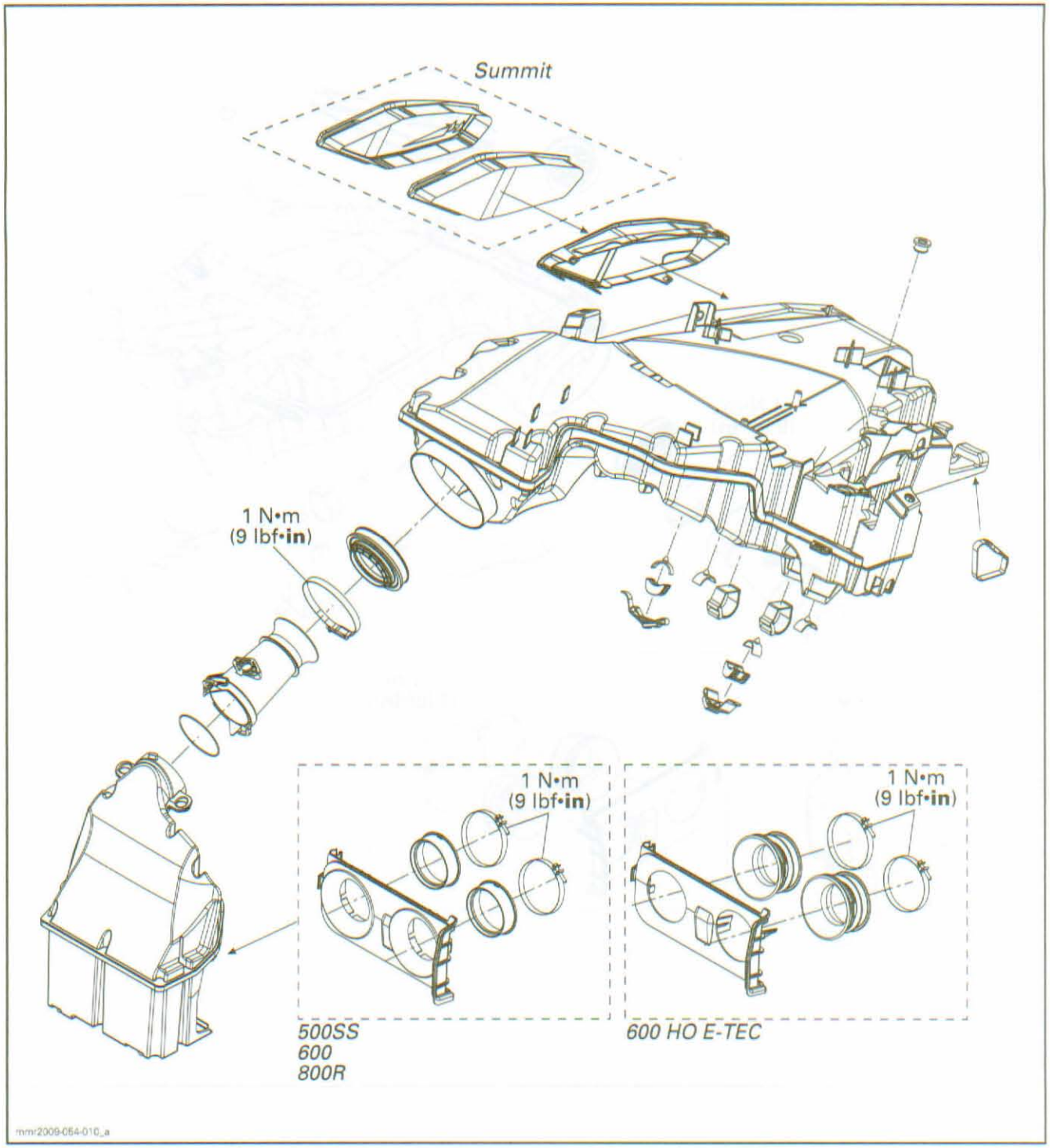

www.midwestmanuals.com

600 HO E-TEC

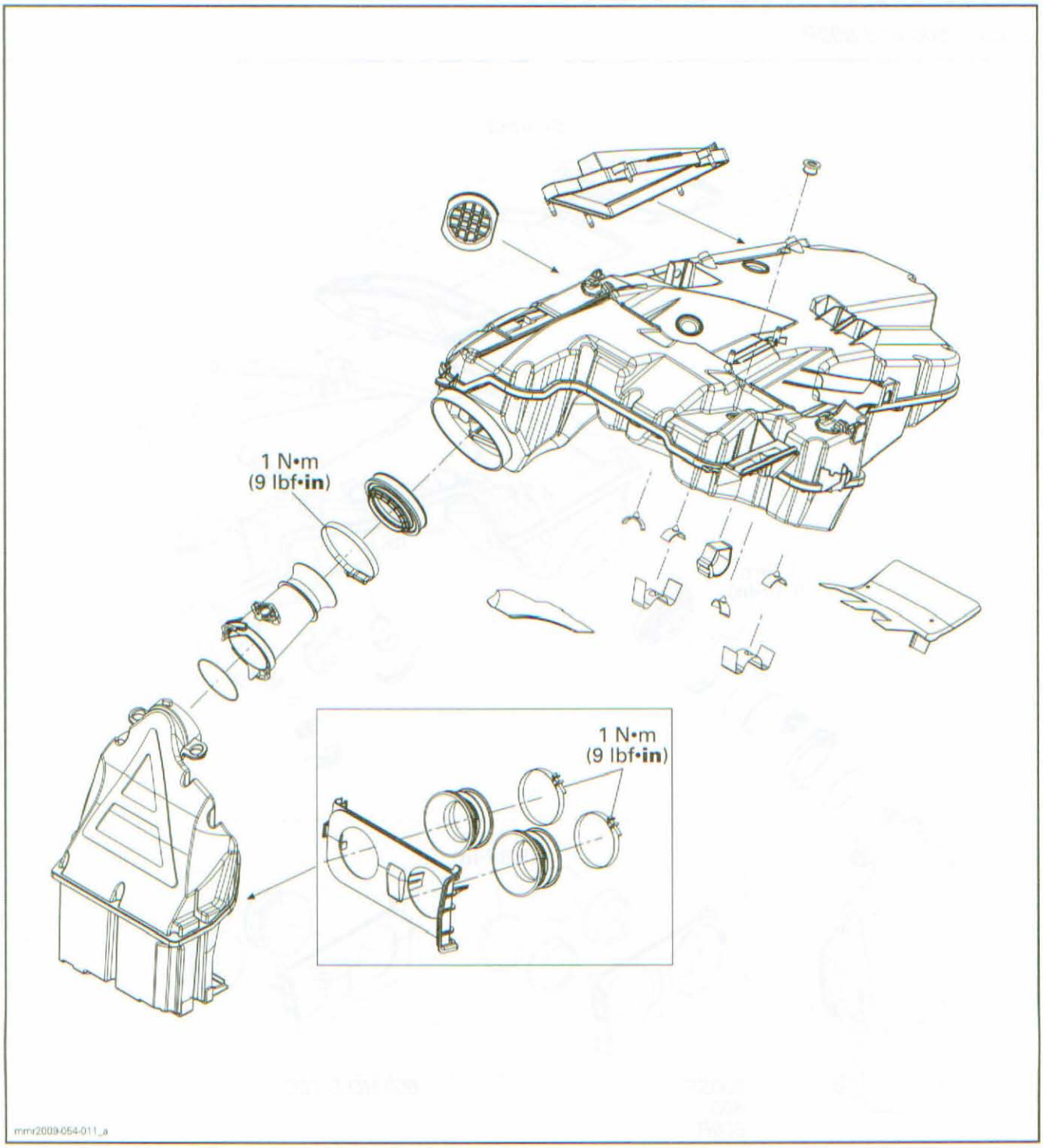

www.midwestmanuals.com

GENERAL

During assembly/installation, use the torque values and service products as in the exploded views.

Clean threads before applying a threadlocker. Refer to *SELF-LOCKING FASTENERS* and *LOCTITE APPLICATION* at the beginning of this manual for complete procedure.

⚠ WARNING

Torque wrench tightening specifications must be strictly adhered to.
Locking devices (e.g.: locking tabs, elastic stop nuts, cotter pins, etc.) must be replaced with a new ones.

Hoses or cables removed or disconnected must be installed and routed at the same place.

NOTICE **Locking ties removed during a procedure must be replaced and installed at the same location.**

PROCEDURES

AIR FILTER

Air Filter Removal

All Models except GTX LE and SUMMIT

1. The air filter is located on left hand side of secondary air intake silencer.
2. Refer to *BODY* and remove:
   - Hood
   - Bottom pan cover
   - LH side panel.
3. Remove left upper console screw.
4. Pull off both front secondary air intake silencer Velcro straps.

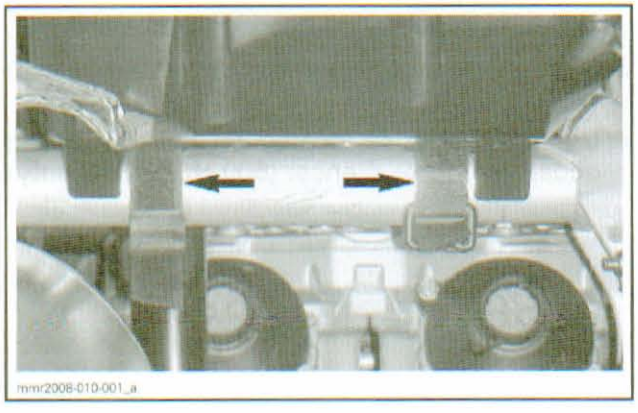

5. Gently pull upper section of bottom pan and lift front of secondary air intake silencer.
6. Unlatch all 5 air filter retaining tabs.

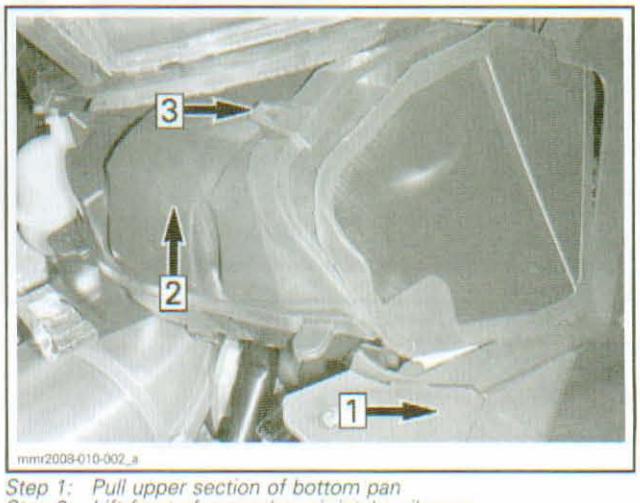

Step 1: Pull upper section of bottom pan
Step 2: Lift front of secondary air intake silencer
Step 3: Unlatch retaining tabs

7. Pull air filter out of secondary air intake silencer.

GTX LE

1. The air filter is located on left hand side of secondary air intake silencer.
2. Refer to *BODY* and remove:
   - Hood
   - Bottom pan cover
   - LH side panel.
3. Pull off secondary air intake silencer Velcro strap.
4. Gently pull upper section of bottom pan and lift front of secondary air intake silencer.
5. Pull the air filter to release retaining pins.

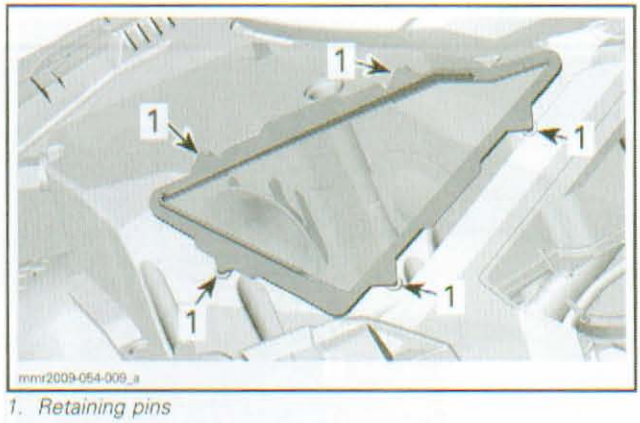

1. Retaining pins

SUMMIT

1. Remove hood. Refer to *BODY* section.
2. Pull the filter out of its housing.

www.midwestmanuals.com



1. Air filter with its jacket
2. Secondary air intake silencer

Air Filter Cleaning

Clean with fresh water and mild soap.

Replace air filter as required.

NOTE: If the filter is very dirty, clean the interior of secondary air intake silencer at the same time.

Air Filter Installation

The installation is the reverse of the removal procedure.

PRIMARY AIR INTAKE SILENCER

Primary Air Intake Silencer Removal

1. Remove LH side panel.
2. Remove drive belt guard, refer to *DRIVE BELT* section.
3. Unlock connector tube as follows:
   - 3.1 Lift tab on rear section of connector tube.
   - 3.2 Twist tube counter clockwise and pull slightly forward.

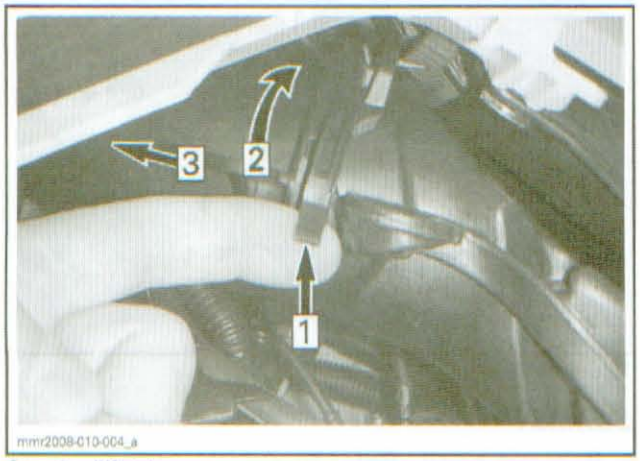

Step 1: Lift tab
Step 2: Twist tube
Step 3: Pull forward

4. Push securing tab of primary air intake silencer and pull silencer out of adapter plate.

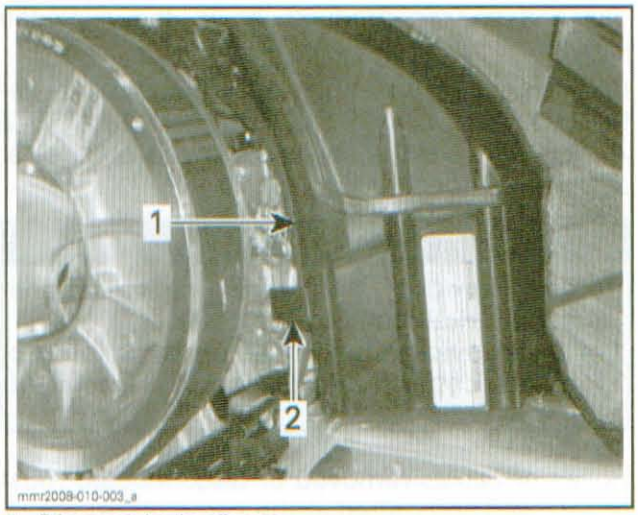

1. Primary air intake silencer
2. Securing tab

Primary Air Intake Silencer Installation

The installation is the reverse of the removal procedure. However, pay attention to guide the primary air intake silencer into the adapter plate's groove. Also make sure that the primary air silencer is pushed to the end of adapter plate and that the securing tab is fully engaged.

SECONDARY AIR INTAKE SILENCER

Secondary Air Intake Silencer Removal

All Models except GTX LE

1. Remove multifunction gauge, refer to *LIGHTS, GAUGE AND ACCESSORIES* section.
2. Refer to *BODY* section and remove:
   - Hood
   - LH and RH side panels
   - Bottom pan cover
   - Gauge support and headlights as a unit.
3. Slightly move console aside without disconnecting cables.
4. Unplug APS hose located on RH top of secondary air intake silencer (**600 HO E-TEC only**).

www.midwestmanuals.com

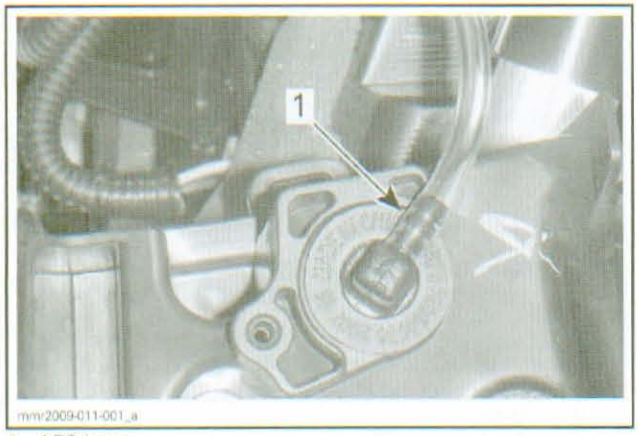

1. *APS hose*

5. Unplug vent hose (**500SS, 600 and 800R**).

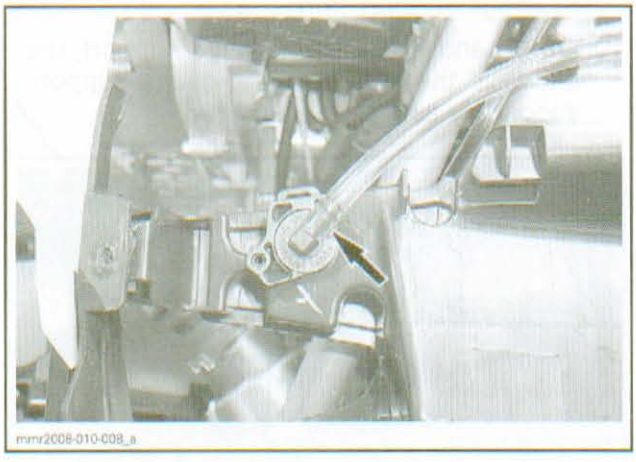

6. Disconnect air temperature sensor (ATS) located on top of connector tube (**600 HO E-TEC and 800R**).
7. Unlock connector tube as described in *PRIMARY AIR INTAKE SILENCER REMOVAL*.
8. Pull off all 4 Velcro straps located on the lower portion of the secondary air intake silencer.



TYPICAL — REAR VELCRO STRAP

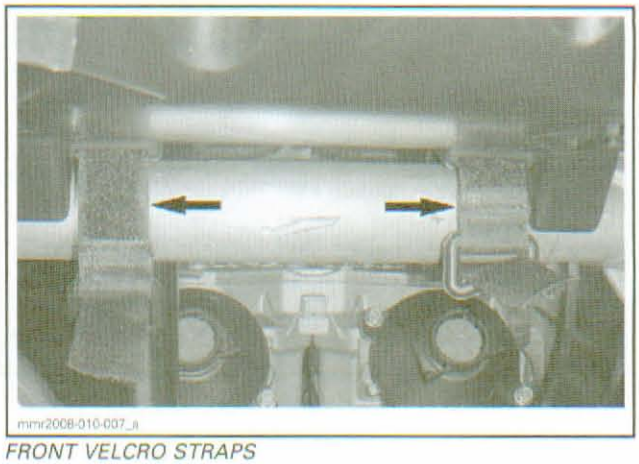

FRONT VELCRO STRAPS

9. Remove secondary air intake silencer.

GTX LE

1. Refer to *BODY* section and remove the following parts:
   - Hood
   - Bottom pan cover
   - Windshield
   - Console.
2. Remove the multifunction gauge. Refer to *LIGHTS, GAUGE AND ACCESSORIES* section.
3. Unplug headlight connectors.

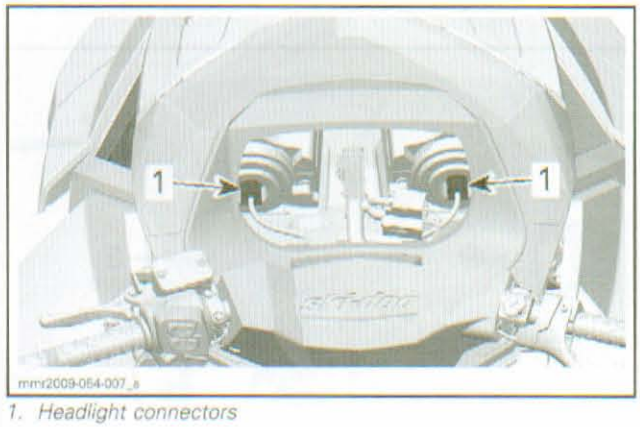

1. *Headlight connectors*

4. Remove screws securing the gauge support.

www.midwestmanuals.com

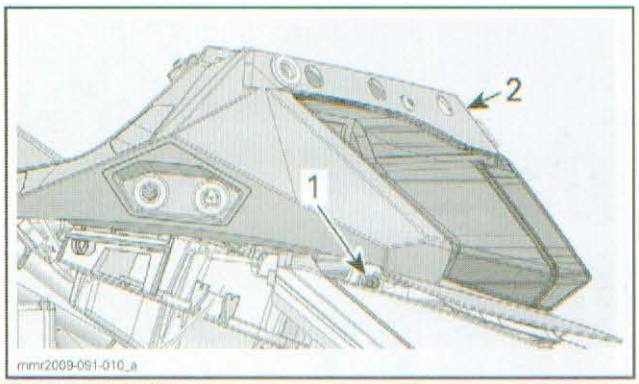

RH SIDE SHOWN
1. *Retaining screw*
2. *Gauge support*

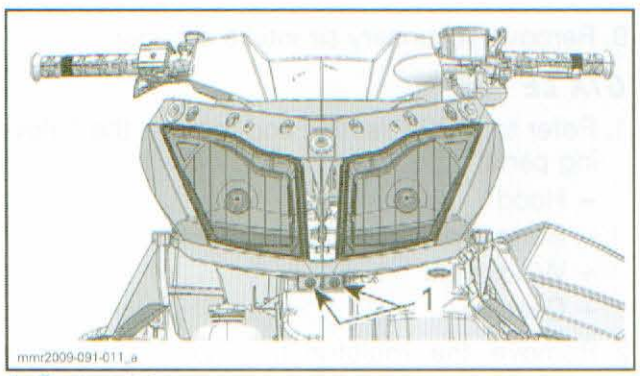

1. *Front retaining screws*

5. Unplug the DESS post, the visor outlet and the 12-volt power outlet.

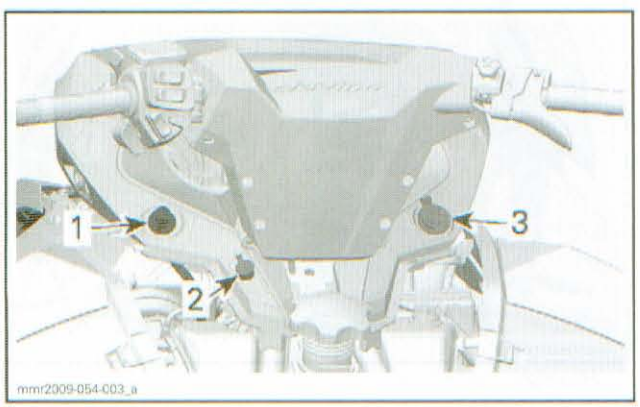

1. *DESS post*
2. *Visor outlet*
3. *12-volt power outlet*

6. Unlock connector tube as described in *PRIMARY AIR INTAKE SILENCER REMOVAL*.
7. Disconnect air temperature sensor (ATS) located on top of connector tube.
8. Pull off the Velcro strap located on the front lower portion of the secondary air intake silencer.

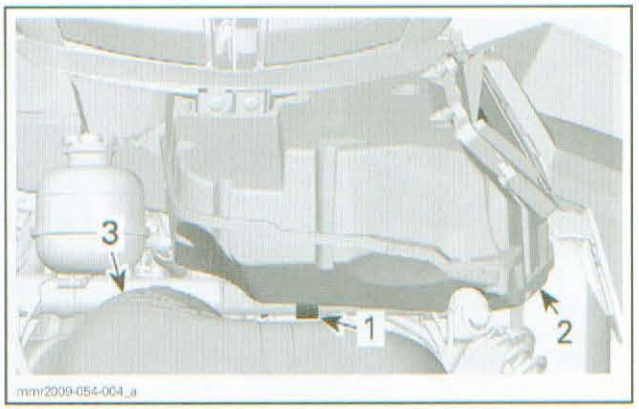

1. *Velcro Strap*
2. *Secondary air intake silencer*
3. *Tuned pipe*

9. Remove the secondary air intake silencer and the gauge support from the vehicle.
10. On LH and RH sides of gauge support, press and hold the tabs securing gauge support to secondary air intake silencer.

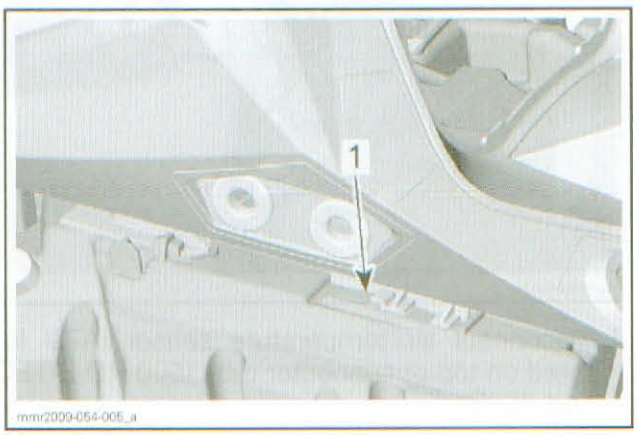

LH SIDE SHOWN
1. *Press this tab*

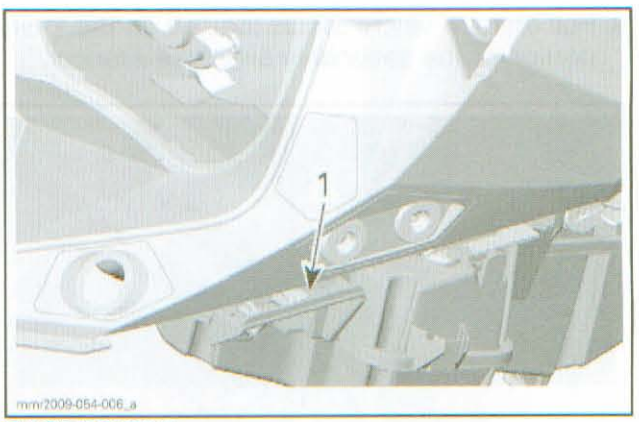

RH SIDE SHOWN
1. *Press this tab*

11. Slide the gauge support then lift its rear portion to separate the gauge support and the secondary air intake silencer.

www.midwestmanuals.com

Secondary Air Intake Silencer Installation

The installation is the reverse of the removal procedure. However, pay attention to the following.

Make sure to route Velcro straps correctly.

All Models except GTX LE

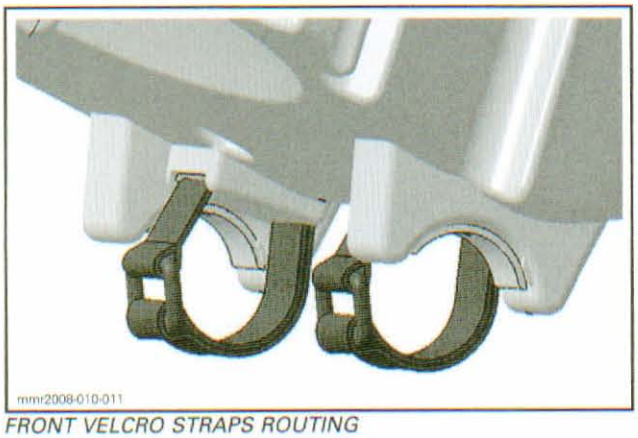

FRONT VELCRO STRAPS ROUTING

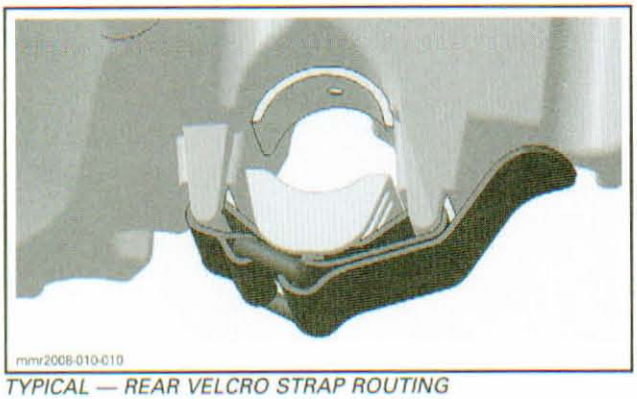

TYPICAL — REAR VELCRO STRAP ROUTING

GTX LE

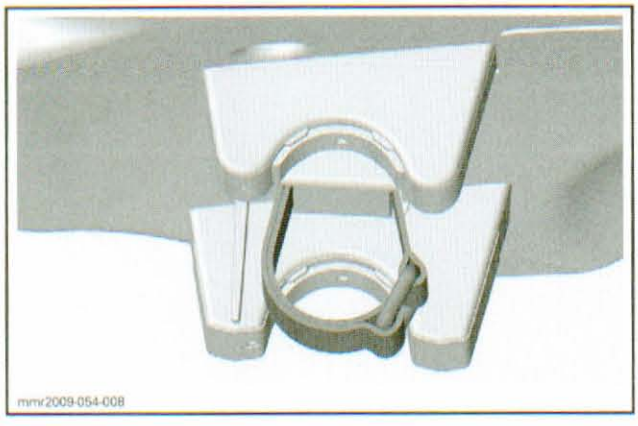

All Models

Make sure to reconnect the APS, the ATS and the vent hose where applicable.

www.midwestmanuals.com

www.midwestmanuals.com

EXHAUST SYSTEM

SERVICE TOOLS

Description	Part Number	Page
SPRING REMOVAL TOOL	529 035 983	51–52

SERVICE TOOLS – OTHER SUPPLIER

Description	Part Number	Page
SNAP-ON 5 MM ALLEN SPHERICAL SOCKET	FABLM5E	52

www.midwestmanuals.com

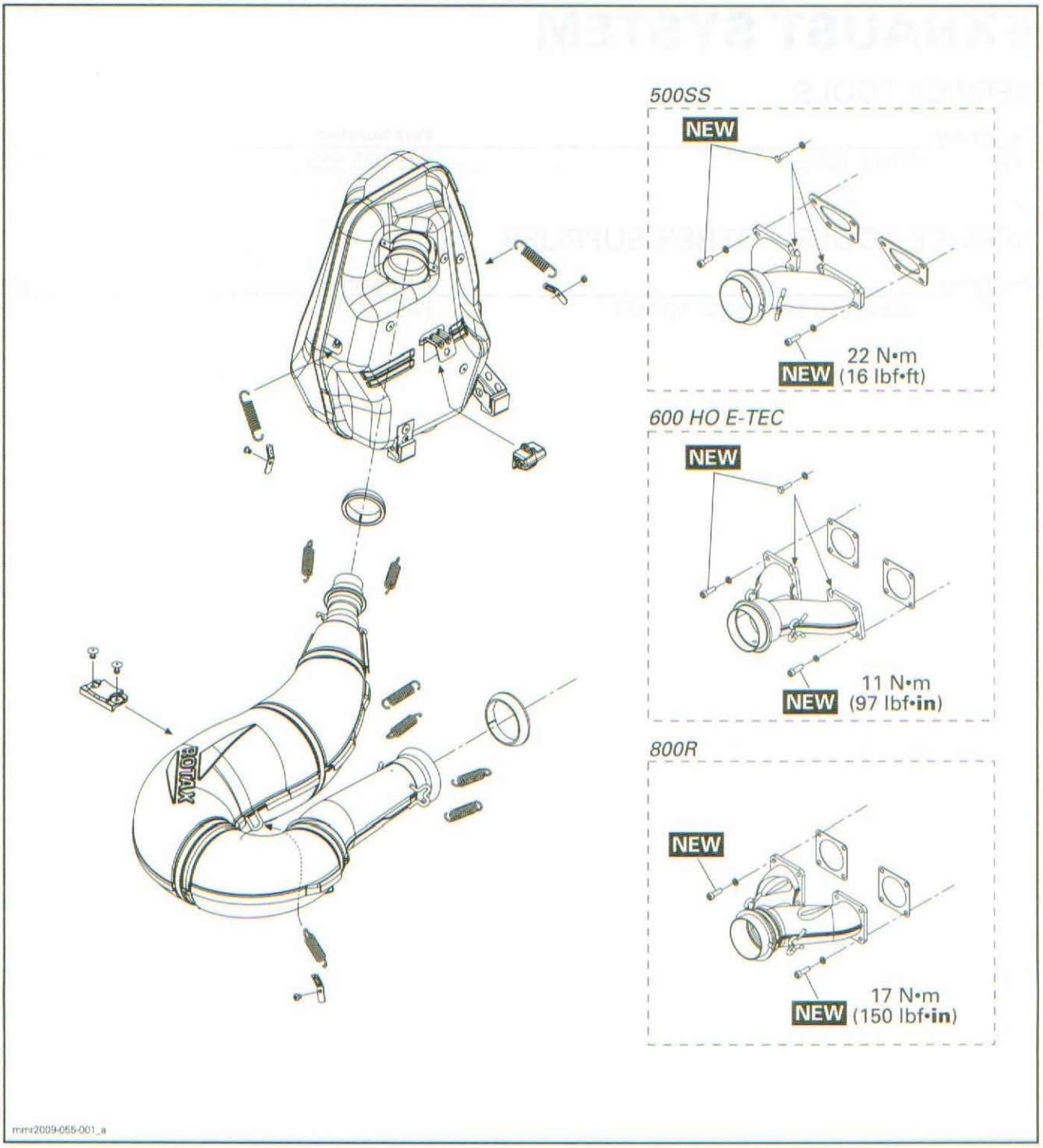

www.midwestmanuals.com

GENERAL

⚠ WARNING

To avoid potential burns, never touch exhaust system components immediately after the engine has been running because these components are very hot. Let engine and exhaust system cool down before performing any servicing.

During assembly/installation, use the torque value and service products as in the exploded view.

⚠ WARNING

Torque wrench tightening specifications must be strictly adhered to.
Locking devices (e.g.: locking tabs, elastic stop nuts, self-locking fasteners, cotter pins, etc.) must be replaced with new ones.

NOTE: On applicable models, it is good practice to check for fault codes using B.U.D.S. software as a first troubleshooting step. Refer to *EMS DIAGNOSTIC AND COMMUNICATION TOOLS*.

PROCEDURES

MUFFLER

Muffler Removal

1. Remove right hand side panel.
2. Disconnect the EGTS (Exhaust Gas Temperature Sensor) on **600 HO E-TEC models**.
3. Remove springs retaining the muffler. Use SPRING REMOVAL TOOL (P/N 529 035 983).

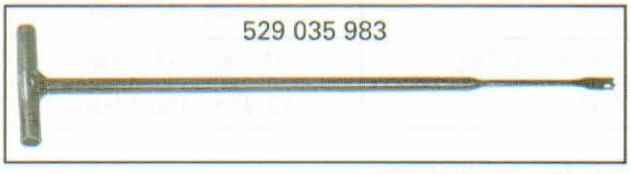

4. Remove the muffler.

Muffler Inspection

Check the muffler for cracks or other damages.

Muffler Installation

For installation, reverse the removal procedure.

EXHAUST GAS TEMPERATURE SENSOR (EGTS)

Refer to *ELECTRONIC FUEL INJECTION (EFI)* section to verify or change the EGTS.

TUNED PIPE

Tuned Pipe Removal

1. Refer to *BODY* and remove:
   - Right hand side panel
   - Hood
   - Bottom pan cover.
2. Remove exhaust springs. Use SPRING REMOVAL TOOL (P/N 529 035 983).

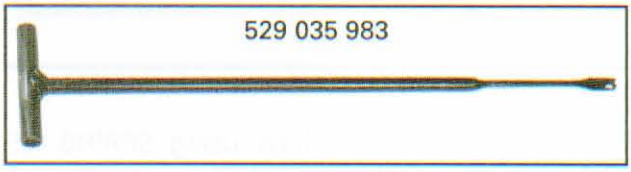

3. Remove muffler (**except 800R models**). See procedure in this section.
4. Remove tuned pipe.
5. Remove doughnut shaped exhaust gaskets.

Tuned Pipe Inspection

1. Check tuned pipe and shields for:
   - Damages
   - Cracks.
2. Also inspect gaskets condition. Replace as required.

Tuned Pipe Installation

1. Install doughnut shaped exhaust gasket with both of its notches aligned with Y-manifold protrusions.

www.midwestmanuals.com

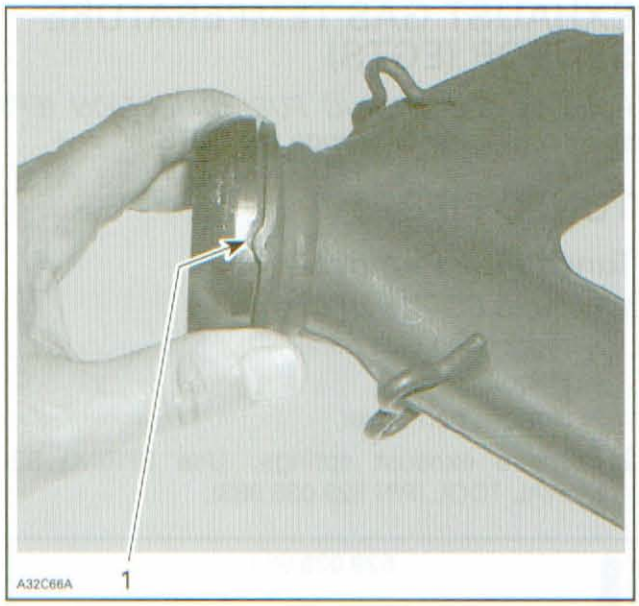

1. Align notches

2. Install all exhaust springs using SPRING REMOVAL TOOL (P/N 529 035 983).

MANIFOLD

Manifold Removal

1. Remove tuned pipe. See procedure in this section.
2. Remove and discard manifold screws using a SNAP-ON 5 MM ALLEN SPHERICAL SOCKET (P/N FABLM5E).

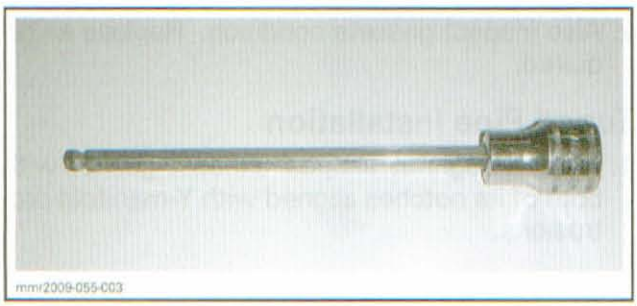

NOTE: Take note of the respective position of the socket screws and the hexagonal screws for proper installation.

NOTICE **Heat screws for 30 seconds before loosening to prevent screw breakage.**

3. Remove manifold.
4. Remove gaskets.

Manifold Inspection

Check if the manifold is cracked or damaged. Replace if necessary.

Manifold Installation

1. Install the manifold with new gaskets.
2. Install **NEW** manifold screws. On **500SS and 600 HO E-TEC**, install hexagonal screws at these locations.

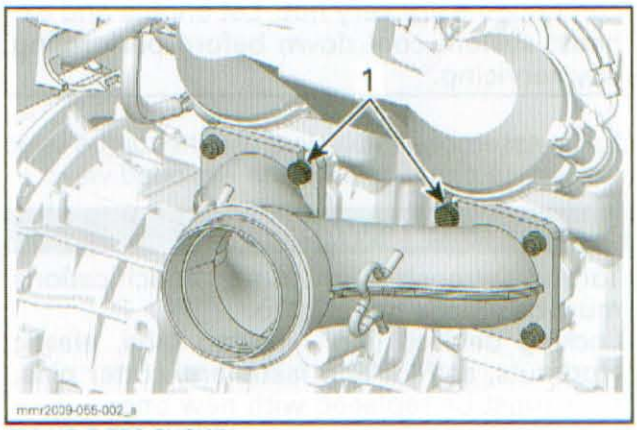

600 HO E-TEC SHOWN
1. Hexagonal screws

3. Torque manifold screws to specification using the following pattern.

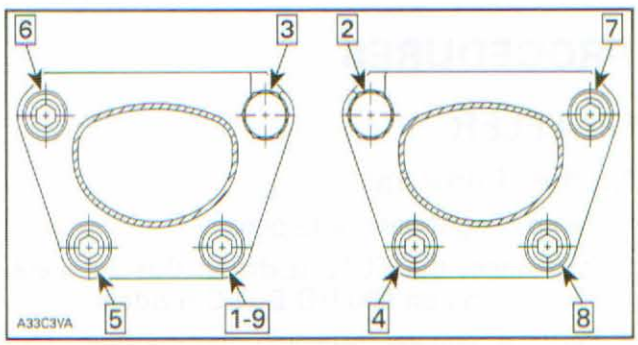

ENGINE	TORQUE
593	22 N•m (16 lbf•ft)
593 HO E-TEC	11 N•m (97 lbf•**in**)
797	17 N•m (150 lbf•**in**)

4. Install tuned pipe.
5. Install muffler.

www.midwestmanuals.com

REWIND STARTER

SERVICE TOOLS

Description	Part Number	Page
SMALL HOSE PINCHER	295 000 076	55

SERVICE PRODUCTS

Description	Part Number	Page
MOLYKOTE PG 54	420 899 763	57–58

www.midwestmanuals.com

All Engines Except 600 HO E-TEC with Electric Start

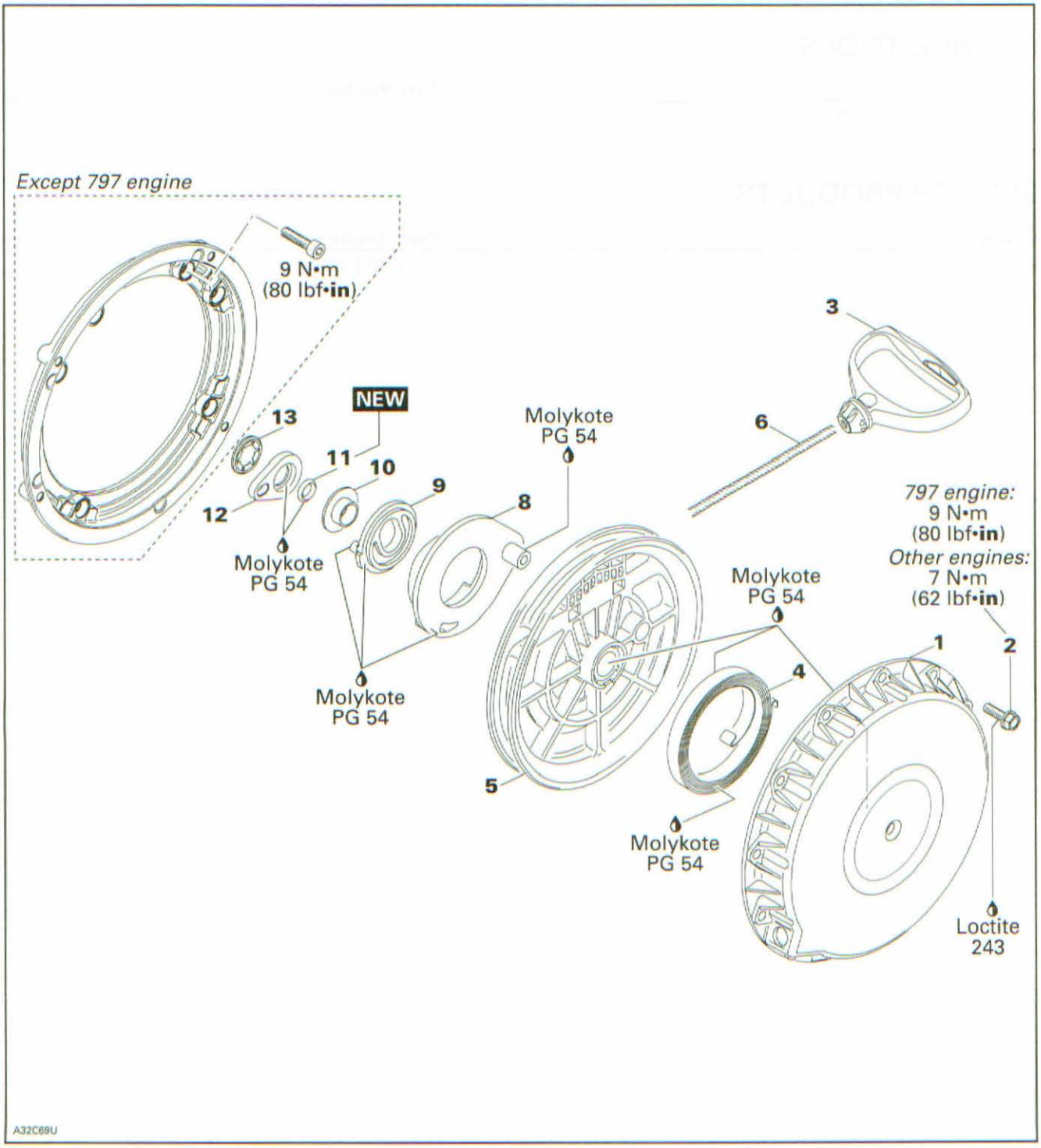

www.midwestmanuals.com

INSPECTION

Due to dust accumulation, rewind starter must be periodically cleaned, inspected and lubricated. Refer to *MAINTENANCE CHART.*

NOTICE **It is of the utmost importance that the rewind starter spring be lubricated periodically using specific lubricant. Otherwise, rewind starter component life will be shortened and/or rewind starter will not operate properly under very cold temperatures.**

Check if rope **no. 6** is fraying, replace if so.

When pulling starter grip, mechanism must engage within 30 cm (1 ft) of rope pulled. If not, disassemble rewind starter, clean and check for damaged plastic parts. Replace as required, lubricate, reassemble and recheck.

When releasing starter grip, it must return to its stopper and stay against it. If not, check for proper spring preload or damage. Readjust or replace as required.

When pulling starter grip 10 times in a row, it must return freely. If not, check for damaged parts or lack of lubrication. Replace parts or lubricate accordingly.

PROCEDURES

REWIND STARTER HANDLE

Rewind Starter Handle Removal

Pull rope for 50 cm (20 in) approximately. Using a SMALL HOSE PINCHER (P/N 295 000 076), lock rope near rewind starter.

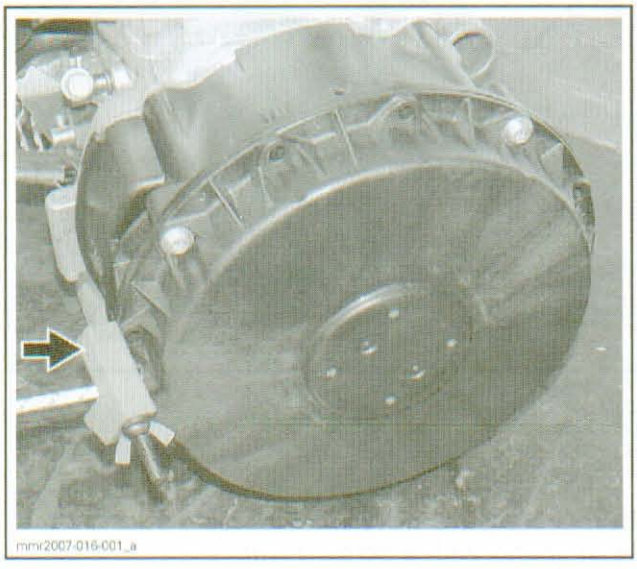

Using a small screwdriver, extract rope knot from stater handle **no. 3**. Cut rope close to knot.

Rewind Starter Handle Installation

Before installing starter handle on the rope, it is necessary to fuse the rope end with a lit match. Pass rope through starter handle and tie a knot on the rope end, see picture.

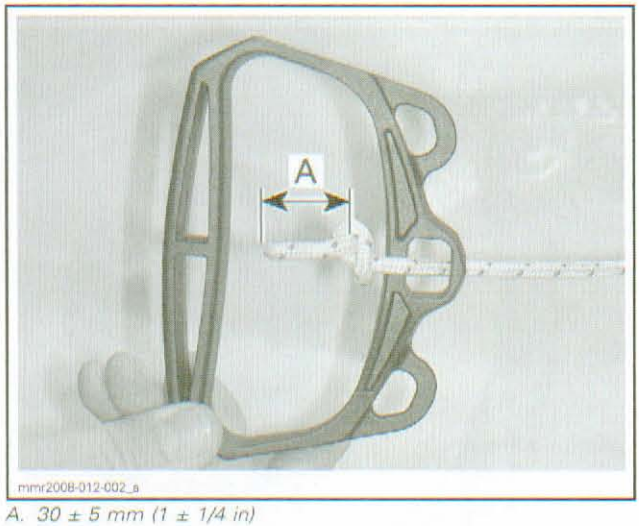

A. 30 ± 5 mm (1 ± 1/4 in)

Fuse the knot with a lit match then insert rope end down and pull the starter handle over the knot.



REWIND STARTER

Rewind Starter Removal

Remove the following parts:
- RH side panel
- Muffler
- Acoustic panel.

Remove starter handle **no. 3**.

www.midwestmanuals.com

Remove screws **no. 2** securing rewind starter **no. 1** to engine then remove rewind starter.

Rewind Starter Rope Replacement

Remove rewind starter.

Completely pull out rope. Hold rewind starter in a vise. Slide rope and untie the knot. Pull out the rope completely.

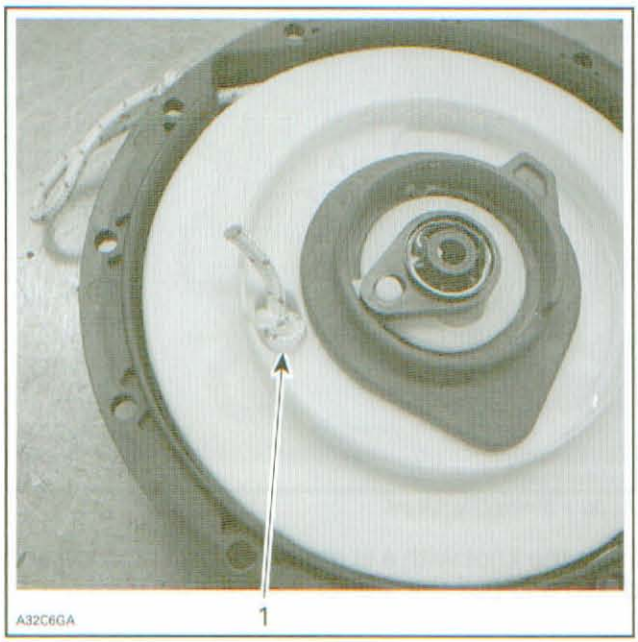

1. Knot to be untied

To install rope **no. 6**, insert rope into sheave **no. 5** orifice and lock it by making a knot, leaving behind a free portion of about 25 mm (1 in) in length.

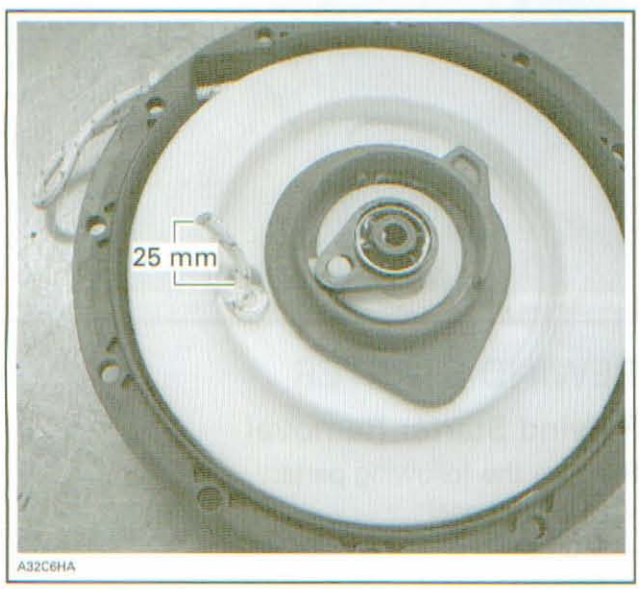

FREE PORTION

Fuse rope end with a lit match and insert it into sheave.

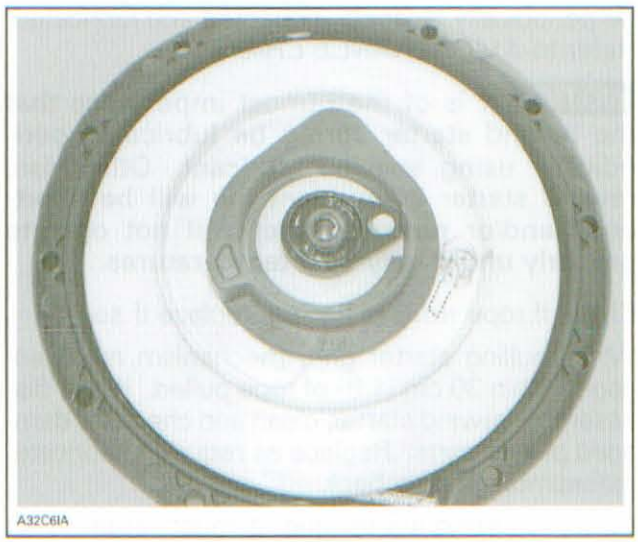

FREE PORTION INSERTED INTO SHEAVE

NOTE: When rope is completely pulled out, spring preload is 4-1/2 turns.

Rewind Starter Disassembly

Remove the hose pincher previously installed on rope at rewind starter removal. Let sheave get free to release spring preload.

Cut push nut and discard.

Remove lock lever, O-ring **no. 11**, collar sleeve, pawl lock and pawl.

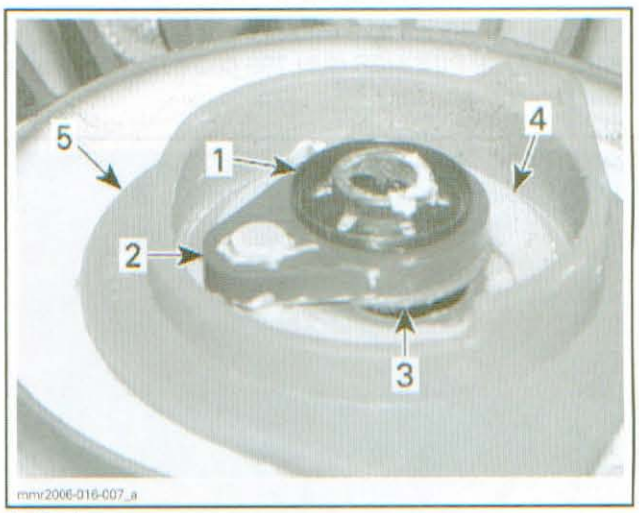

1. *Push nut*
2. *Lock lever*
3. *Collar sleeve*
4. *Pawl lock*
5. *Pawl*

Remove sheave **no. 5** from starter housing **no. 1**. Hold spring with a screwdriver.

www.midwestmanuals.com

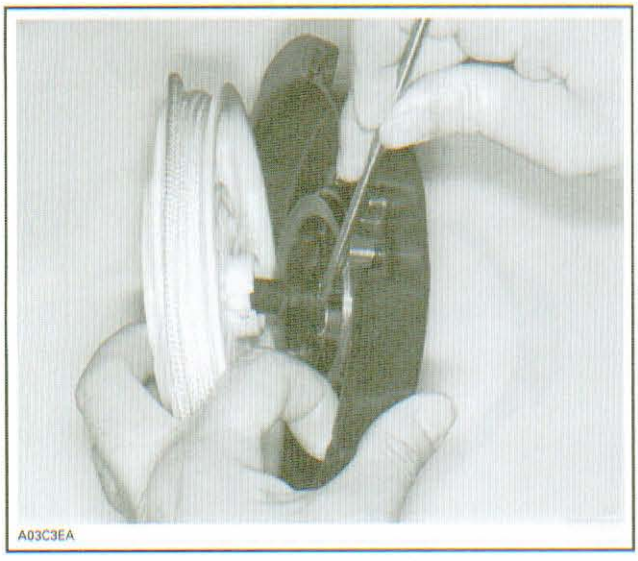

Take out the knot and then rope **no. 6**.

Rewind Starter Assembly

Lubricate spring contact area and spring guide inside housing with MOLYKOTE PG 54 (P/N 420 899 763).

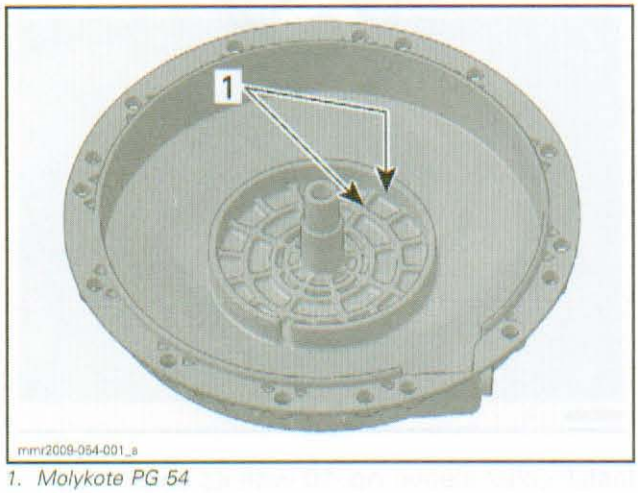

1. Molykote PG 54

At assembly, position spring **no. 4** outer end into spring guide notch then wind the spring counterclockwise into guide.

⚠ WARNING

Since the spring is tightly wound inside the guide it may fly out when rewind is handled. Always handle with care.

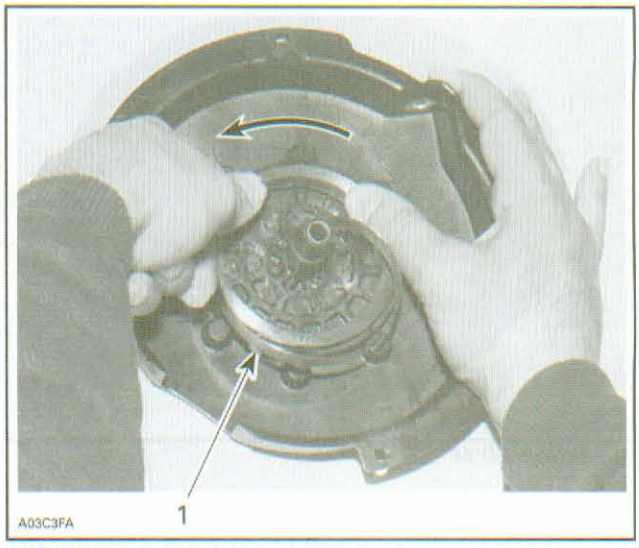

TYPICAL
1. Outer end into guide notch

Lubricate spring assembly and 1 cm (1/2 in) wide on bottom of housing with MOLYKOTE PG 54 (P/N 420 899 763).

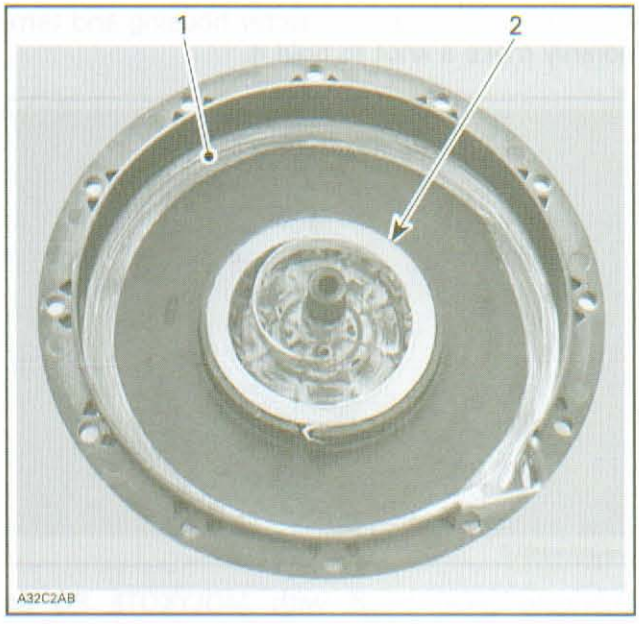

1. Molykote PG 54 applied 1 cm (1/2 in) wide on bottom of housing
2. Molykote PG 54 ion spring

NOTICE **It is of the utmost importance that the rewind starter spring be lubricated periodically using MOLYKOTE PG 54 (P/N 420 899 763). The use of standard multipurpose grease could result in rewind starter malfunction under very cold temperatures and components life will be shortened.**

Lubricate housing post with MOLYKOTE PG 54 (P/N 420 899 763). Install sheave.

www.midwestmanuals.com

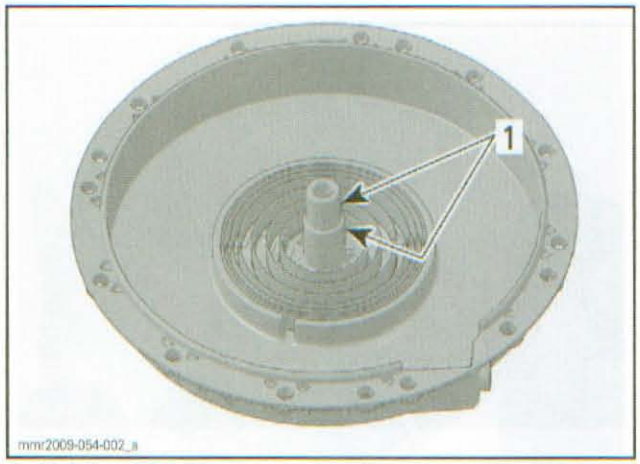

1. Molykote PG 54

To adjust spring tension:

Wind rope on sheave and place rope sheave into starter housing making sure that the sheave hub notch engages in the rewind spring hook.

Rotate the sheave counterclockwise until rope end is accessible through rope exit hole. This will give 1/2 turn of preload.

Pull the rope out of the starter housing and temporarily make a knot to hold it.

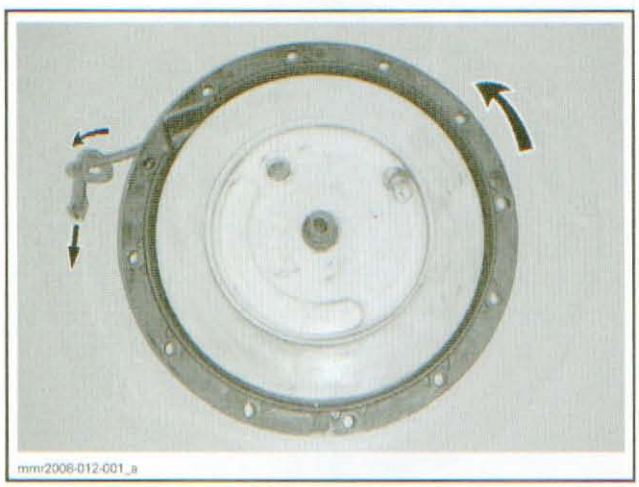

Lubricate pawl **no. 8** with MOLYKOTE PG 54 (P/N 420 899 763) then install over rope sheave.

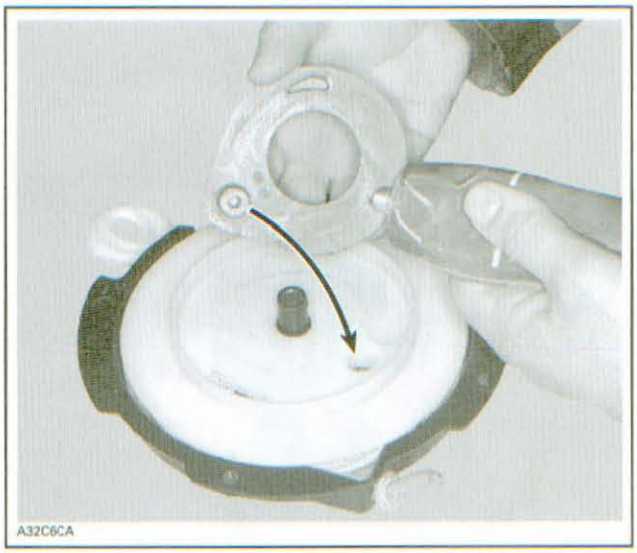

Lubricate pawl lock **no. 9** with MOLYKOTE PG 54 (P/N 420 899 763). Install over pawl.

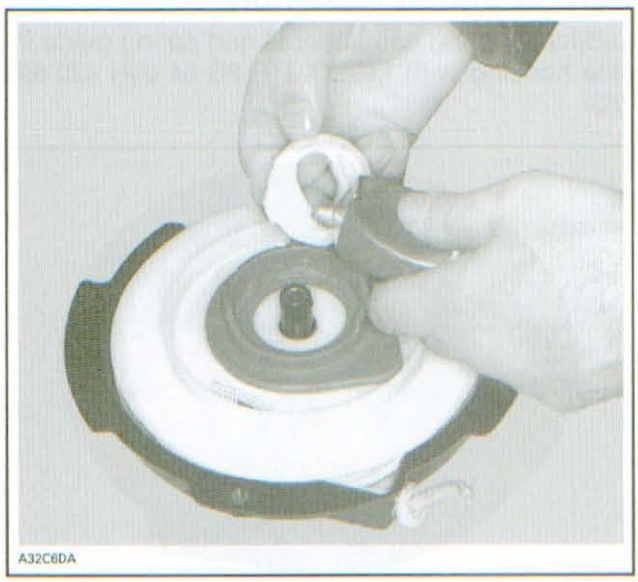

Install collar sleeve **no. 10** with its collar first. Lubricate a new O-ring **no. 11** and lock lever **no. 12** with MOLYKOTE PG 54 (P/N 420 899 763). Install over pawl lock.

www.midwestmanuals.com

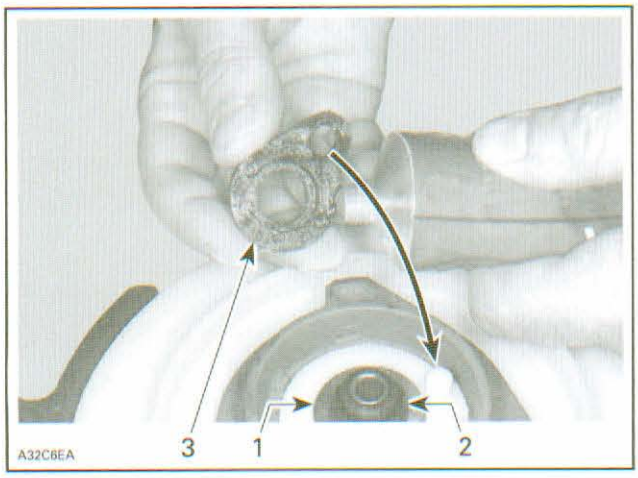

1. *Collar sleeve*
2. *O-ring*
3. *Lock lever*

Secure lock lever with a new push nut **no. 13**.

Rewind Starter Installation

Thread starter rope **no. 6** through console.

Install handle, refer to *STARTER HANDLE INSTALLATION*.

Reinstall rewind starter assembly on engine.

www.midwestmanuals.com

www.midwestmanuals.com

LUBRICATION SYSTEM

SERVICE TOOLS

Description	Part Number	Page
ENGINE REMOVAL HOOK	529 035 829	69
FLUKE 115 MULTIMETER	529 035 868	77
LEAK TESTING KIT	529 033 100	66
OIL PUMP CABLE ADJUSTER	529 036 045	70
SMALL HOSE PINCHER	295 000 076	66
SPARK PLUG LIFT RING	529 035 830	68
THROTTLE FREE PLAY WEDGE TOOL	529 036 042	69
VACUUM/PRESSURE PUMP	529 021 800	67, 78

SERVICE PRODUCTS

Description	Part Number	Page
LOCTITE 243 (BLUE)	293 800 060	69
LOCTITE 648 (GREEN)	413 711 400	79
PULLEY FLANGE CLEANER	413 711 809	79
XP-S SYNTHETIC BLEND 2-STROKE OIL	293 600 100	66

www.midwestmanuals.com

OIL INJECTION TANK

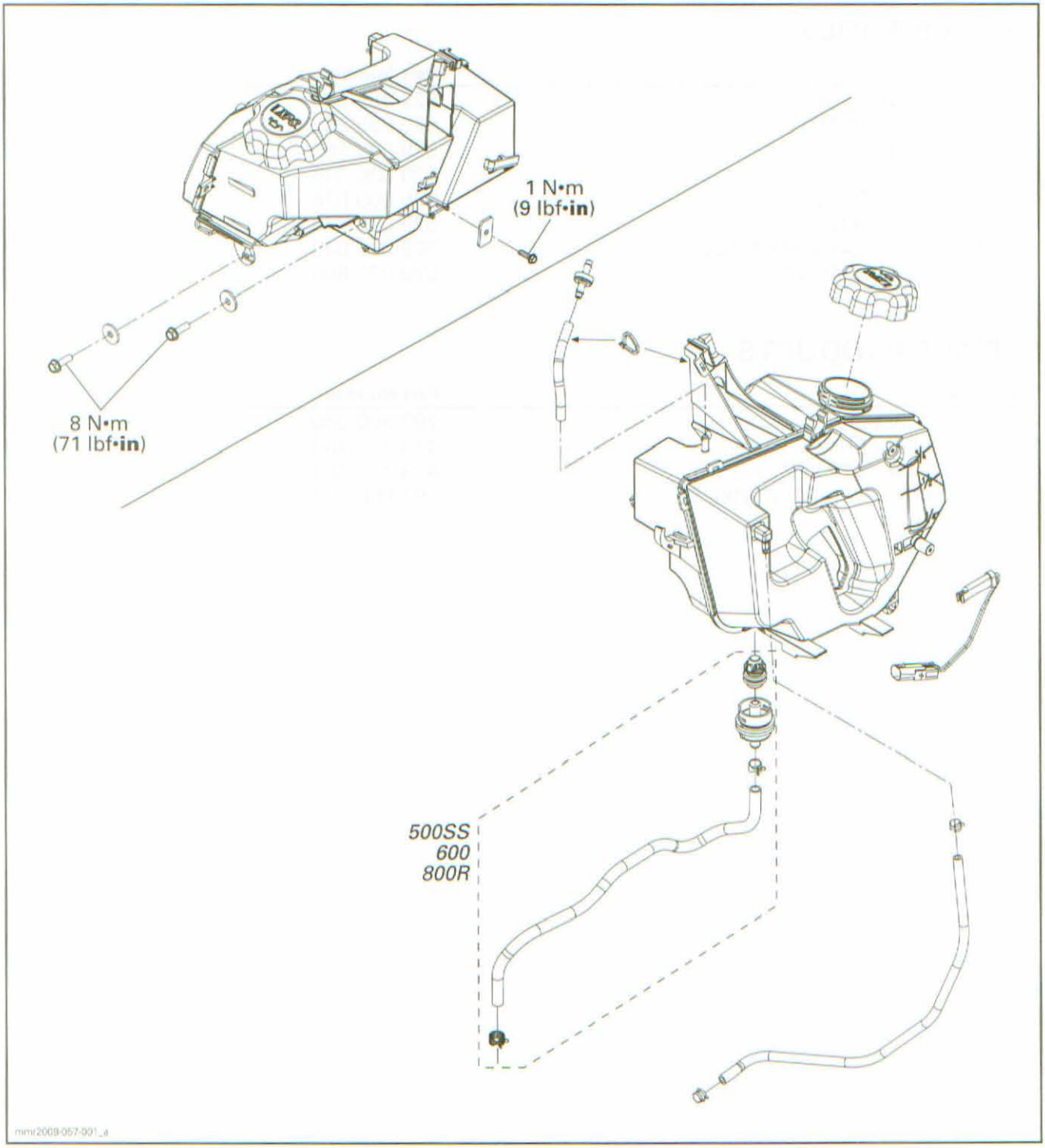

www.midwestmanuals.com

OIL INJECTION PUMP

500SS/600/800R

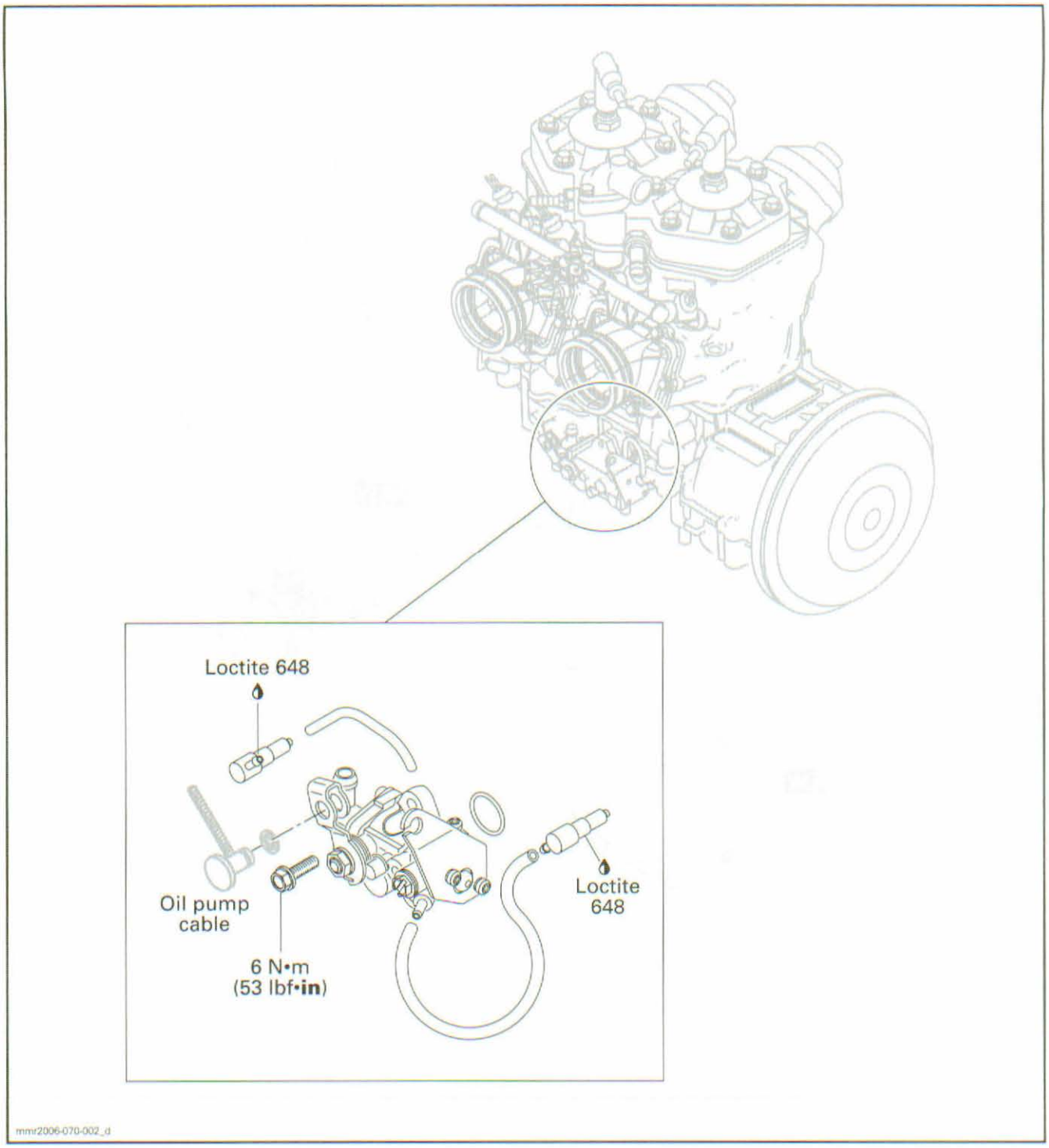

www.midwestmanuals.com

600 HO E-TEC

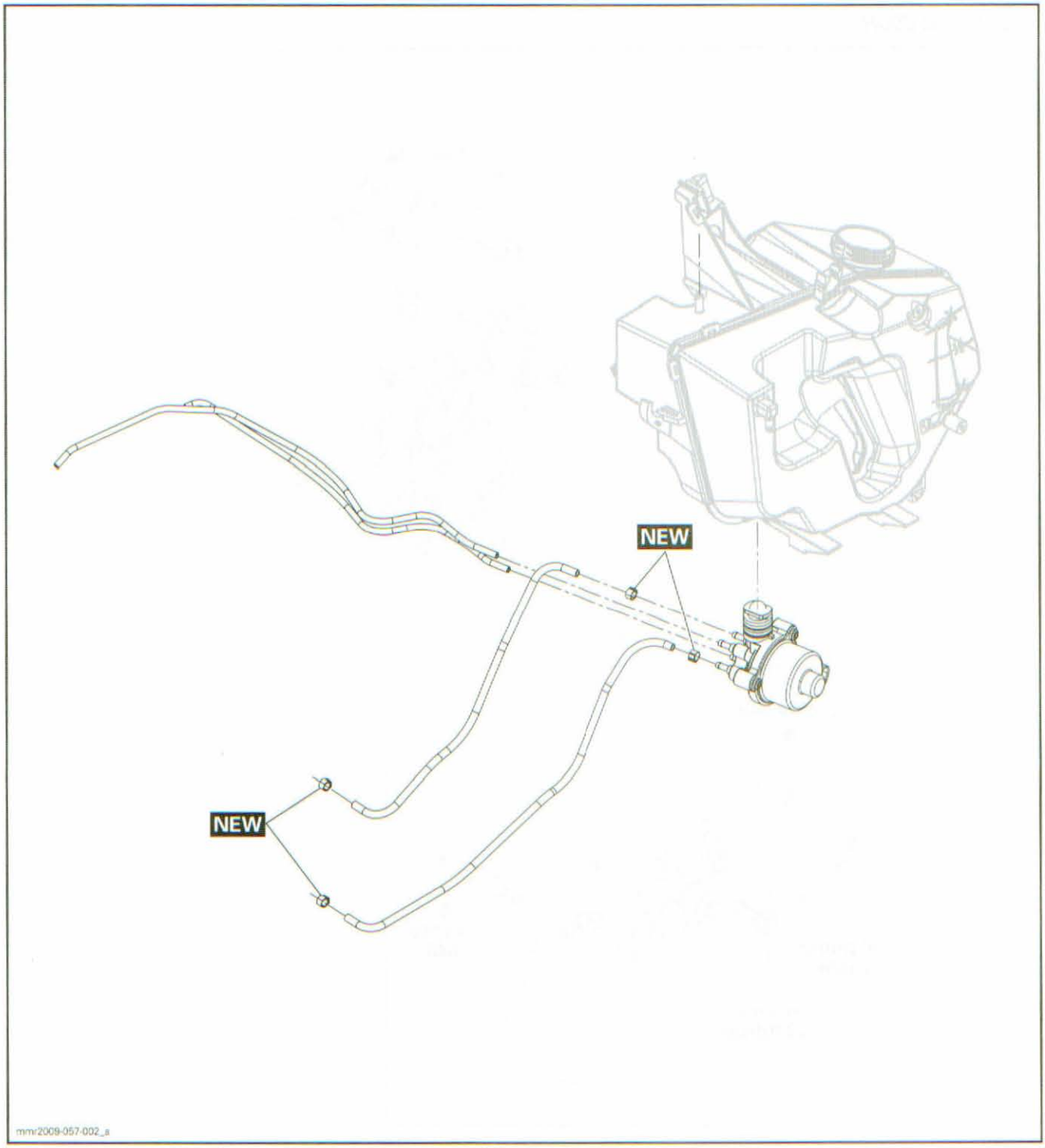

www.midwestmanuals.com

GENERAL

During assembly/installation, use the torque values and service products as in the exploded view.

Clean threads before applying a threadlocker. Refer to *SELF-LOCKING FASTENERS* and *LOCTITE APPLICATION* at the beginning of this manual for complete procedure.

⚠ WARNING

Torque wrench tightening specifications must be strictly adhered to.
Locking devices (e.g.: locking tabs, elastic stop nuts, self-locking fasteners, etc.) must be replaced with new ones.

Hoses or cables removed or disconnected must be installed and routed at the same place.

NOTICE **Locking ties removed during a procedure must be replaced and installed at the same location.**

⚠ WARNING

Wipe off any oil spills. Oil is highly flammable.

NOTICE **Do not use a hose pincher on outlet hose. This would damage the spring inside hose.**

SYSTEM DESCRIPTION

500SS/600/800R

These engines employ a variable-rate plunger-type oil injection pump.

This variable-rate mechanical oil injection pump is directly driven by the crankshaft.

This pump delivers the right amount of oil at all engine RPM and at all throttle opening positions.

The pump stroke is variable and controlled by a cam, connected to the pump lever and cable (linked to the throttle cable). The wider the throttle is opened, the pump stroke increases and more oil is delivered.

This pump requires no or little maintenance.

600 HO E-TEC

An electronic oil injection pump with a mechanical positive displacement type is used. An electronic pump is more accurate and injection rate can be changed according to engine requirements. This results in a greatly reduced oil consumption.

The electronic oil injection pump is directly attached under oil injection tank.

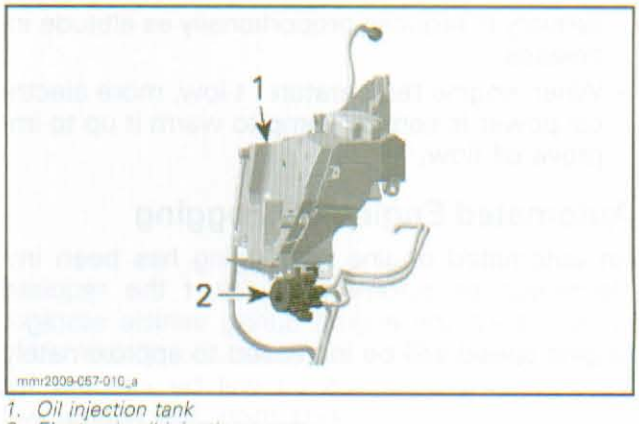

1. *Oil injection tank*
2. *Electronic oil injection pump*

The E-TEC pump features a total of 4 outlets:
- 2 large outlets to the crankcase to lubricate engine internal parts.
- 2 small outlets to the 3D RAVE valves to lubricate valves to prevent carbon deposits.

The 4 plungers in the pump work synchronized. They pump all at the same time.

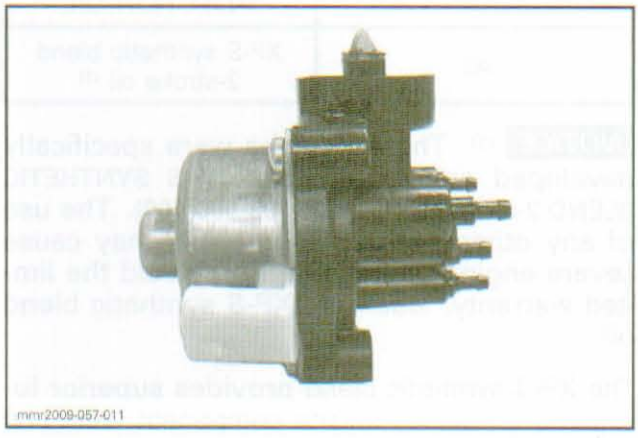

The ECM controls the pump to inject a variable amount of oil through the entire engine operating range and conditions.

Here are some highlights of the pump.
- For the first 6 hours of engine break-in period, oil delivery is increased.
- Oil/fuel ratio can go up to approximately 70:1 after the break-in period.
- At idle, pump works at approximately less than 1 pulse per minute. A very low quantity of oil is injected to reduce engine smoke and to reduce engine emissions.
- As engine speed increases, oil delivery increases but not proportionally. It varies accordingly to the specific engine requirements.

www.midwestmanuals.com

- At 8000 RPM, pump works at approximately 120 pulses per minute.
- When operating vehicle in high altitude area, oil delivery is reduced proportionally as altitude increases.
- When engine temperature is low, more electrical power is sent to pump to warm it up to improve oil flow.

Automated Engine Oil Fogging

An automated engine oil fogging has been implemented to automatically inject the required oil to protect the engine during vehicle storage. Engine speed will be increased to approximately 2000 RPM and excess oil will be injected for approximately 30 seconds then, the engine will automatically be stopped.

The storage mode can be activated either by using B.U.D.S. or the multifunction gauge on the vehicle. Refer to *STORAGE* section for the procedures.

RECOMMENDED OIL

ENGINES	RECOMMENDED INJECTION OIL
All	XP-S synthetic blend 2-stroke oil (1)

NOTICE (1) **These engines were specifically developed and tested with XP-S SYNTHETIC BLEND 2-STROKE OIL (P/N 293 600 100). The use of any other 2-stroke engine oils may cause severe engine damage and may void the limited warranty. Use only XP-S synthetic blend oil.**

The XP-S synthetic blend **provides superior lubrication**, reduced engine component wear and oil deposit, thus maintaining maximum-level performance and antifriction properties. The synthetic blend injection oil meets the latest ASTM and JASO standards by ensuring high biodegradability and low exhaust smoke.



INSPECTION

OIL SYSTEM LEAK TEST

Install on oil tank test cap from the LEAK TESTING KIT (P/N 529 033 100).



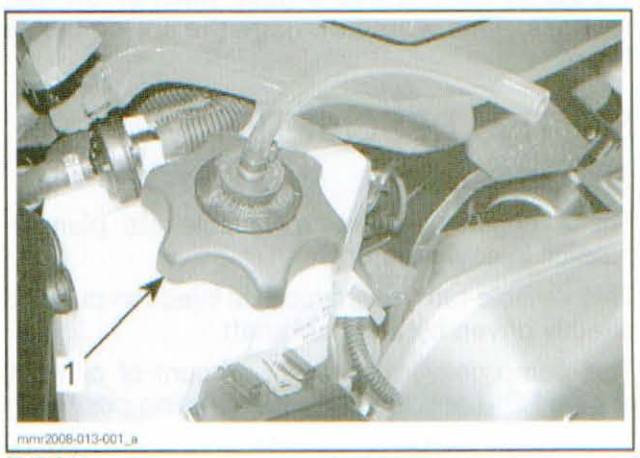

TYPICAL
1. Test cap on tank

Install a SMALL HOSE PINCHER (P/N 295 000 076) on check valve outlet hose.

www.midwestmanuals.com

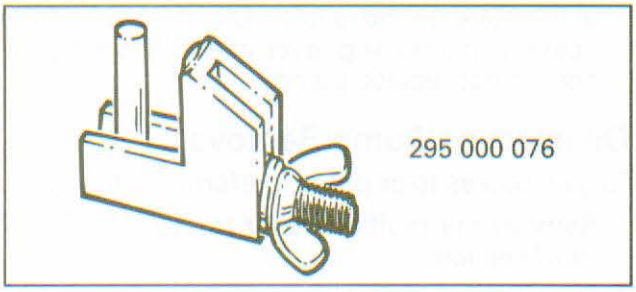

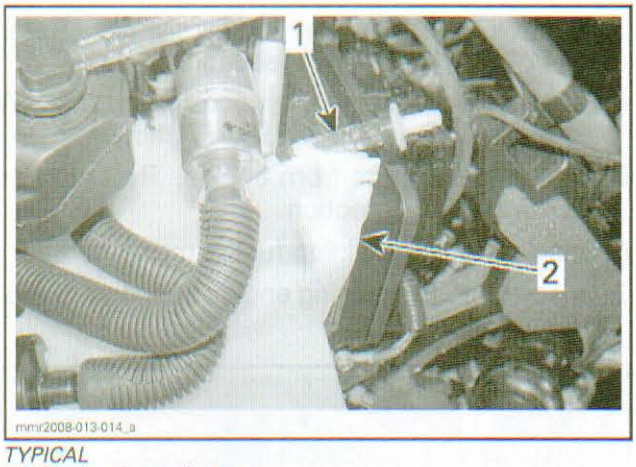

TYPICAL
1. *Check valve outlet hose*
2. *Oil tank*

Connect the VACUUM/PRESSURE PUMP (P/N 529 021 800) to test cap.



Pressurize oil system as follows.

PRESSURE	TIME TO HOLD PRESSURE
18 kPa (2.6 PSI)	3 minutes

If pressure drops, locate leak(s) and repair or replace leaking component(s).

– If no external leak can be found, check the engine pump shaft and the injector nozzles (except 600 HO E-TEC).

If pressure does not drop, this validate the system for leakage (except for the oil pump hoses on 600 HO E-TEC).

Check Valve Test

Check valve allows air to get into the tank.

To verify this one-way check valve, cut locking tie then remove it along with the hose. Make sure that it holds pressure and that it does not let air go through.

NOTE: Remember hose position.

NOTICE **If check valve does not allow air to enter, serious engine damage will occur.**

When replacing/installing check valve, insert its black side into vent line.

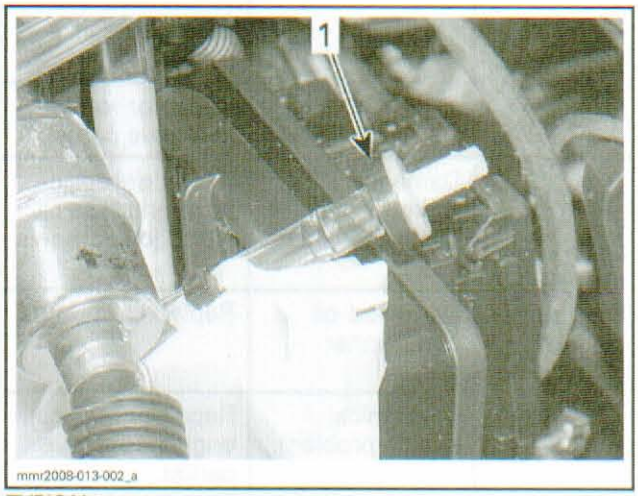

TYPICAL
1. *Black side here*

www.midwestmanuals.com

TROUBLESHOOTING

600 HO E-TEC

ELECTRONIC OIL INJECTION PUMP		
SYMPTOM	CAUSE	ACTION
	Damaged or disconnected oil pump.	Check oil pump wires and connectors on oil pump.
	Circuit wires, connectors or ECM output pins.	Check WHITE/RED wire on oil pump connector for 55 volts.
		Check system circuit J1B-23.
		Repair or replace defective part(s).
Engine seizure (PTO or MAG side)	Damaged, kinked or obstructed inlet hose.	Repair or replace hose and test oil pump (oil outflow).
	Damaged oil pump inner piston.	Replace oil pump.
	Mechanical engine problem.	Repair or replace engine defective part(s).
Engine misfires (carbon on 3D RAVE valve(s))	Damaged, kinked or obstructed inlet hose.	Repair or replace hose and test oil pump (oil outflow).
	Damaged oil pump inner piston.	Replace oil pump.
	Defective 3D RAVE valve.	Clean or replace 3D RAVE valve.

PROCEDURES

OIL INJECTION PUMP (500SS/600/800R)

Oil Injection Pump Verification

NOTE: Since pump is a piston type, it works when engine rotates in both forward and reverse.

1. Remove oil pump from engine. Refer to *OIL INJECTION PUMP REMOVAL* in this section.
2. Connect a hose filled with injection oil to main line fitting. Insert other hoses end in an injection oil container. Using a clockwise rotating drill, rotate pump shaft. Oil must drip from hoses while holding lever in a fully open position. If not replace pump.

Oil Injection Pump Removal

To gain access to oil pump, perform the following.

1. Remove the muffler. Refer to *EXHAUST SYSTEM* section.
2. Remove the engine stopper support.
3. Remove the primary air intake silencer. Refer to *AIR INTAKE SYSTEM* section.
4. Remove the driven pulley. Refer to *DRIVEN PULLEY AND COUNTERSHAFT* section.
5. Detach carburetors from engine. Refer to *TM CARBURETORS* section.
6. Unscrew bolts retaining fuel pump to frames.
7. Unscrew bolts retaining engine supports to rubber mounts.

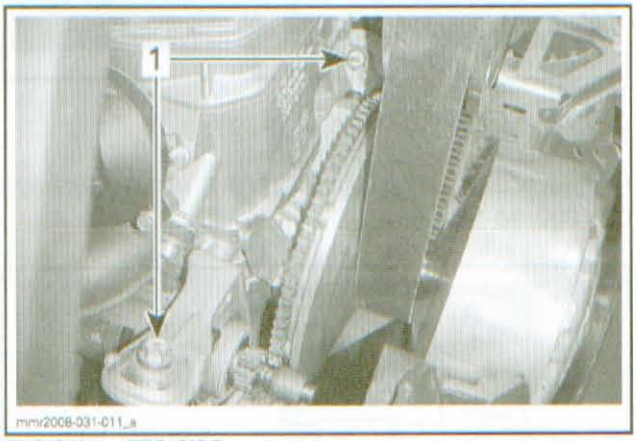

TYPICAL — PTO SIDE
1. Remove hexagonal bolts

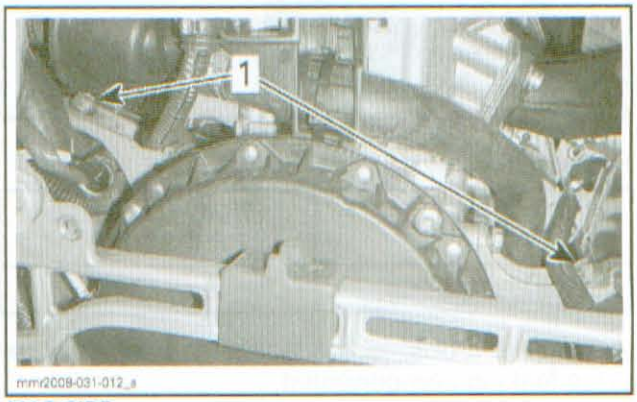

MAG SIDE
1. Remove hexagonal bolts

8. Remove spark plugs and install the SPARK PLUG LIFT RING (P/N 529 035 830) at the farthest spark plug hole.

www.midwestmanuals.com



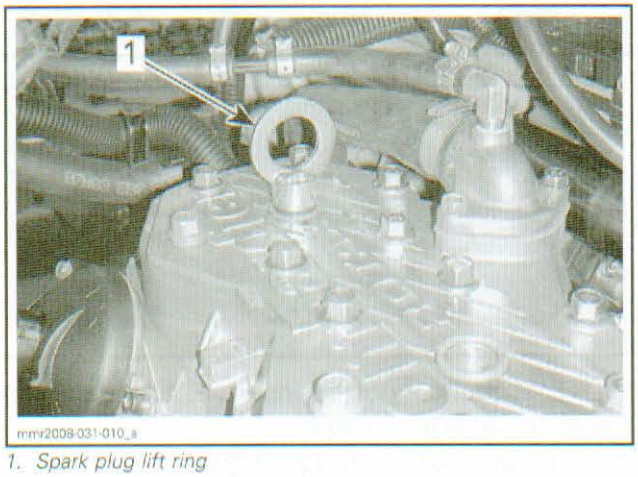

1. Spark plug lift ring

9. Install the ENGINE REMOVAL HOOK (P/N 529 035 829).





10. Lift engine enough to gain access to oil pump.
11. Remove screws retaining oil pump to engine.
12. Unplug hoses connected to oil pump.

NOTE: Mark hose locations for installation.

13. Disconnect oil pump cable.

Oil Injection Pump Cleaning

Clean all metal components in a non-ferrous metal cleaner.

Oil Injection Pump Installation

For installation, reverse the removal procedure. However, pay attention to the following.

1. During installation, always check for spring clip tightness on pump inlet hose.
2. Apply LOCTITE 243 (BLUE) (P/N 293 800 060) on threads of screws and torque them to 6 N•m (53 lbf•**in**).
3. Make sure cable barrel is well seated in oil pump lever.
4. Secure barrel with plastic washer and circlip.
5. Install cable lock washer on left side of support.
6. Bleed oil pump. See procedure further.

NOTICE Always bleed oil pump when the system has been opened.

7. Torque fuel pump screw to 5 N•m (44 lbf•**in**).
8. Install and tighten engine support bolts. Refer to *ENGINE SUPPORT INSTALLATION* in *ENGINE REMOVAL AND INSTALLATION* section.
9. Adjust oil pump cable. See procedure further.

Oil Injection Pump Adjustment

1. Slightly press on throttle lever to eliminate throttle cable free play.
2. Insert the THROTTLE FREE PLAY WEDGE TOOL (P/N 529 036 042), between throttle lever and housing as shown.
   2.1 Slide tool up and down until all free-play is recovered. Stop recovering free-play before throttle cam just begins to move at carburetors.

www.midwestmanuals.com

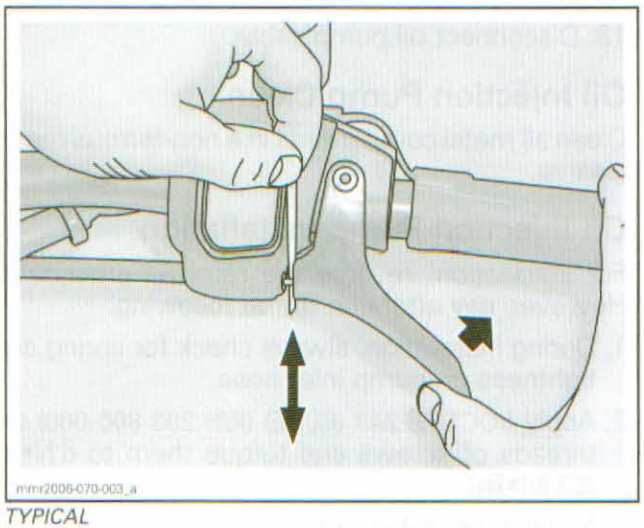

TYPICAL

NOTICE Throttle slides must not move and remain in idle position.

3. Move adjuster boot away and stretch oil pump cable at adjuster.

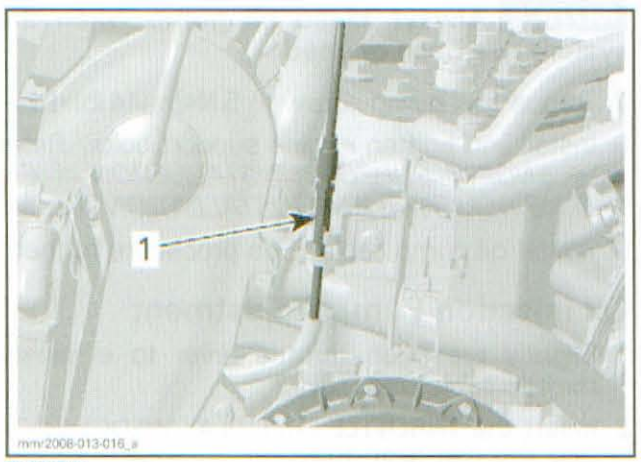

TYPICAL
1. Oil pump cable adjuster

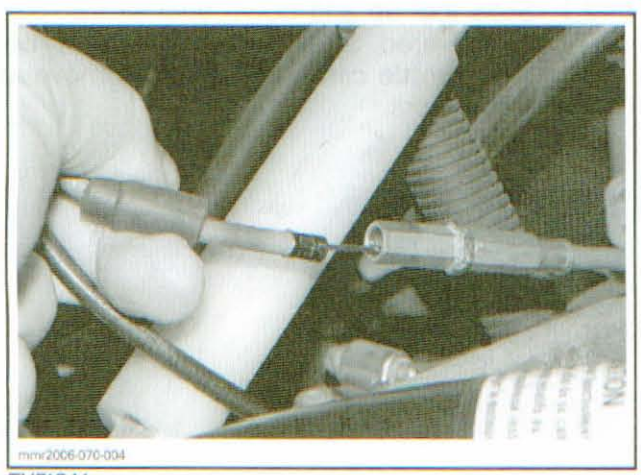

TYPICAL

4. Insert cable in the appropriate slot of the OIL PUMP CABLE ADJUSTER (P/N 529 036 045).

MODEL	ADJUSTMENT SPECIFICATION
500SS 600 800R	16.5 mm (.65 in) 

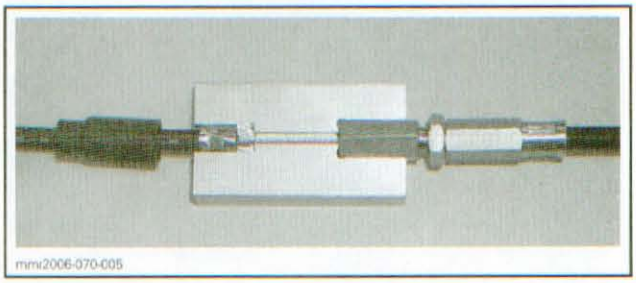

NOTE: If tool cannot be inserted, turn cable adjuster to "shorten" cable.

5. Pull cable with a force of 34 N (7.6 lbf) to recover all play in cable.
6. While still pulling, check if there is a gap as shown.

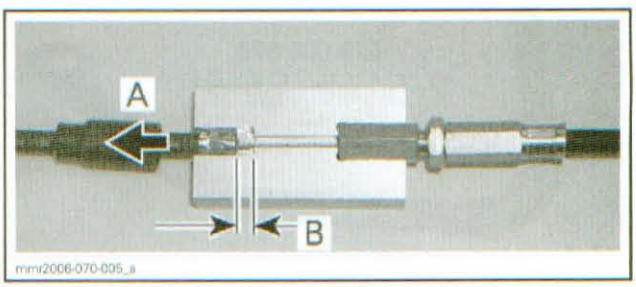

A. Pull 34 N (7.6 lbf)
B. Remove gap here

7. Turn cable adjuster to recover that gap.

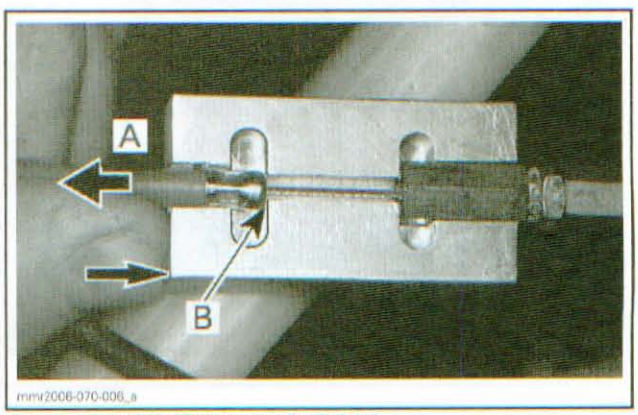

FINAL ADJUSTMENT WITHOUT GAP
A. Pull 34 N (7.6 lbf)
B. No gap

8. Secure adjustment in place with lock nut.

www.midwestmanuals.com

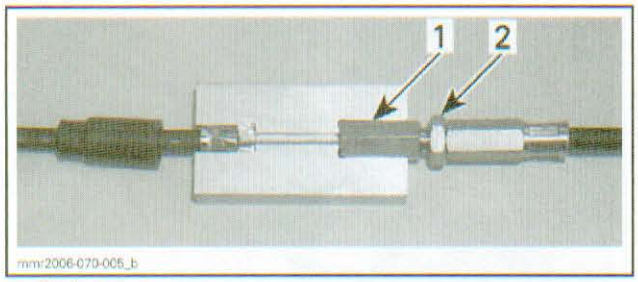

1. Cable adjuster
2. Lock nut

9. Remove the throttle free play wedge tool, push back cable in adjuster and slide adjuster boot in place.

Oil Injection Pump Bleeding

Bleed main oil line (between tank and pump) by loosening the bleeder screw until air has escaped from the line. Add injection oil as required.

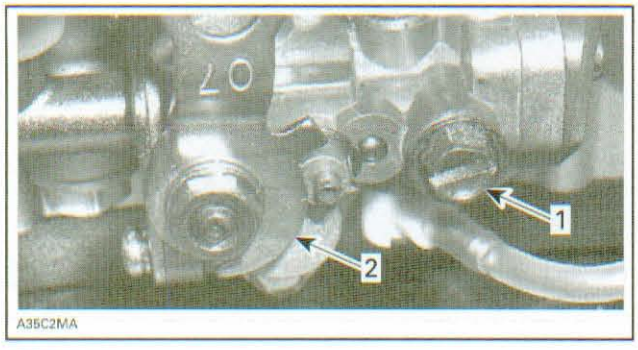

TYPICAL
1. Bleeder screw
2. Oil pump lever

Ensure there are no air bubbles in small oil lines between pump and engine. If so, inject oil using a syringe into lines before connecting them to engine.

OIL PUMP (600 HO E-TEC)

Oil Pump Identification

Every pump is bench tested. Its electrical and flow characteristics are registered throughout all its operating range and are associated to a compensation number.

When a pump is replaced, the compensation number must be entered in B.U.D.S. so that the ECM properly controls the pump according to its optimized characteristics.

The compensation number is located on a label on the pump as shown.

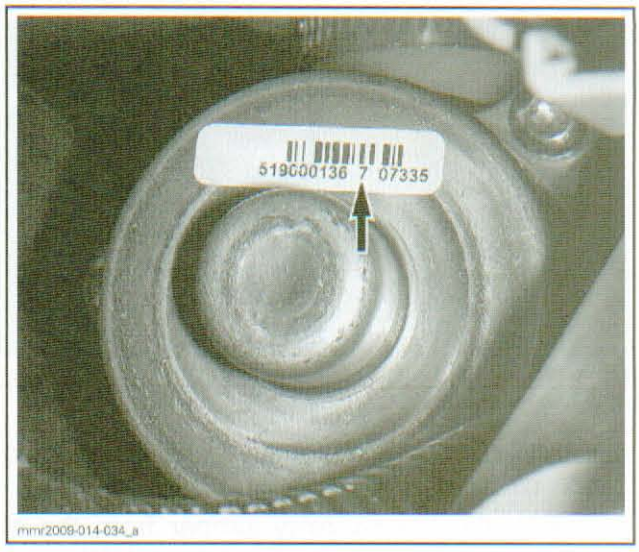

Oil pump bleeding is done with B.U.D.S. Refer to *OIL PUMP BLEEDING* further in this section.

Oil Pump Test with B.U.D.S.

1. Connect B.U.D.S. Refer to *COMMUNICATION TOOLS AND B.U.D.S.* section.
2. In B.U.D.S., press **Read Data**.
3. Select **Activation** folder then the **ECM** page.
4. Press on the oil pump.

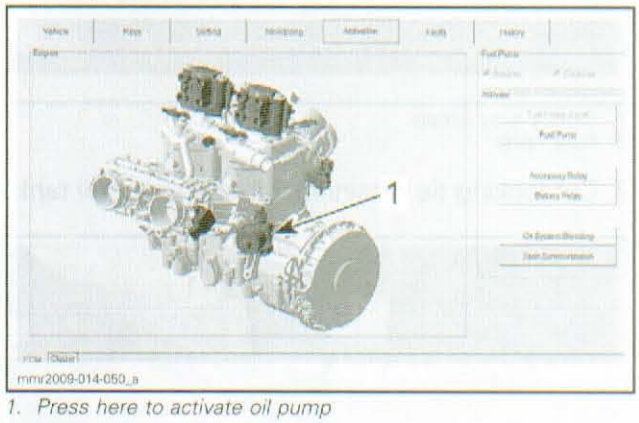

1. Press here to activate oil pump

5. Listen if the oil pump is activated.
6. If the test fails, check wires and connector.

Oil Pump Removal

1. Remove the RH side panel. Refer to *BODY* section.
2. Using B.U.D.S. software, release fuel pressure. Refer to *COMMUNICATION TOOLS AND B.U.D.S.* section.
3. Remove the 30 A fuse.

www.midwestmanuals.com

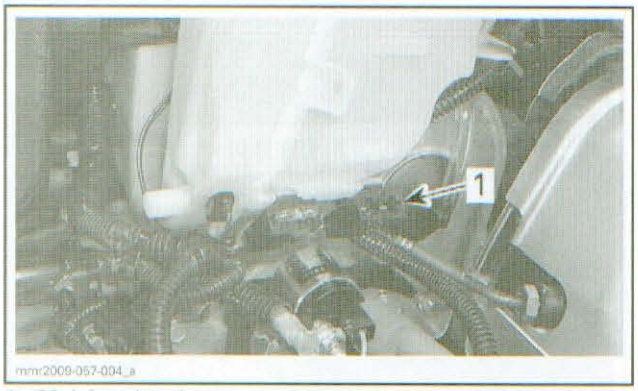

1. 30 A fuse location

4. Empty oil tank completely by siphoning injection oil.
5. Detach the battery relay jumper from the oil tank (**rewind starter equipped models**).
6. Detach fuse holders from the oil tank.

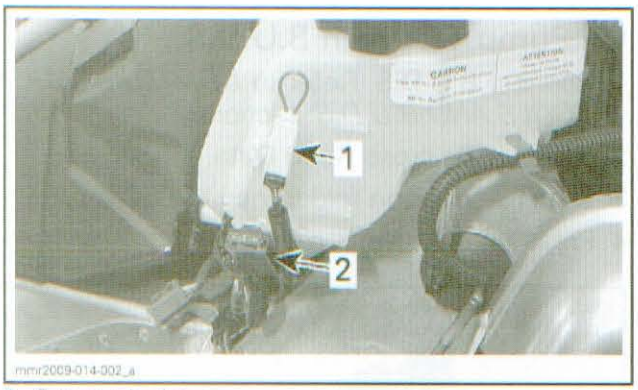

1. Battery relay jumper
2. Fuse holder

7. Cut locking tie retaining wires against oil tank.

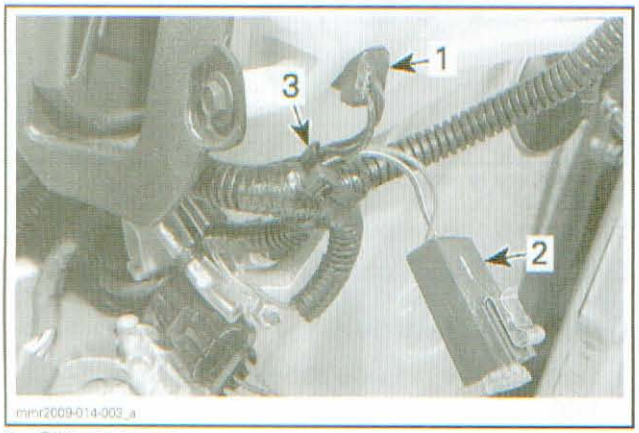

1. Oil level sensor
2. Fuse holder
3. Cut this locking tie

8. Move harness aside and cut the locking tie at the bottom of oil tank.

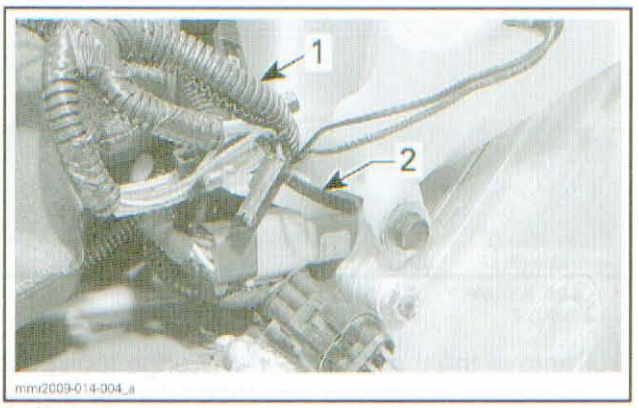

1. Harness
2. Cut this locking tie

9. Detach the diagnostic connector housing from oil tank.

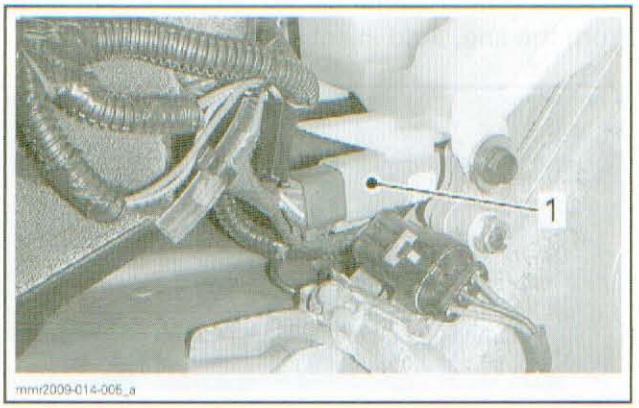

1. Diagnostic connector housing

10. Remove the muffler. Refer to *EXHAUST SYSTEM* section.
11. Remove the acoustic panel by removing the retaining screws.

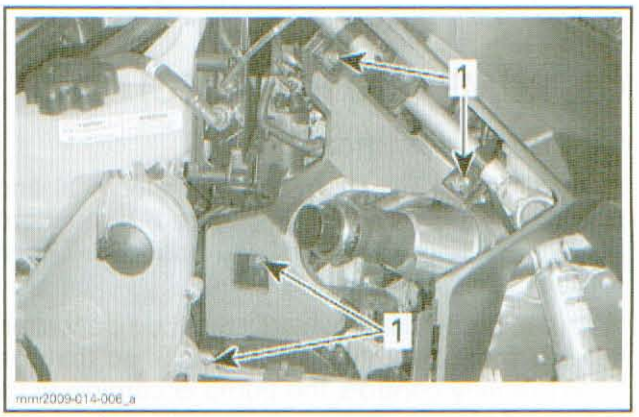

1. Acoustic panel screws

12. Remove the driven pulley. Refer to *DRIVEN PULLEY AND COUNTERSHAFT* section.
13. Unplug the quick disconnect fitting of the fuel inlet hose at ECM.

www.midwestmanuals.com

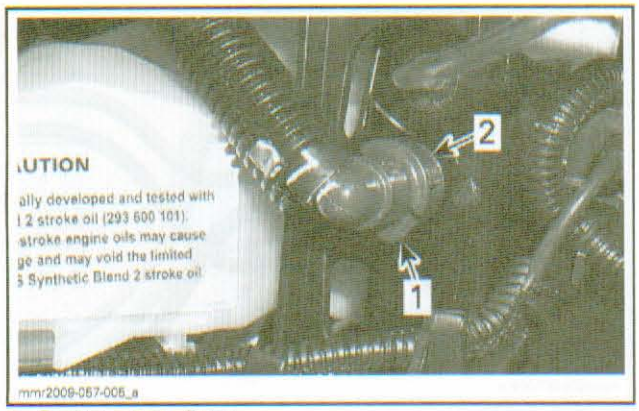

1. *Fuel inlet hose fitting*
2. *Press here to disengage the fitting*

NOTE: Place a container under the connector to recover residual fuel remaining in the system.

⚠ WARNING

Use the B.U.D.S. software to release fuel pressure prior to removing a hose. Cover the fuel line connection with an absorbent shop rag. Slowly disconnect the fuel hose to minimize spilling. Do not allow fuel to spill on hot engine parts and/or on electrical connectors. Wipe off any fuel spillage in the engine compartment. Fuel is flammable and explosive under certain conditions. Always disconnect battery prior to working on the fuel system.

14. Detach the ECM support from oil tank by pressing the upper tab and sliding the support outwards.

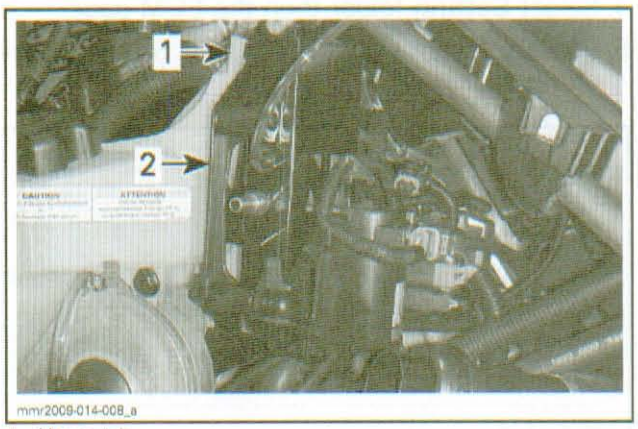

1. *Upper tab*
2. *ECM support*

15. Remove and discard the Oetiker clamps securing oil hoses to oil pump fittings.
16. Disconnect the 4 hoses from oil pump by using a small screwdriver.

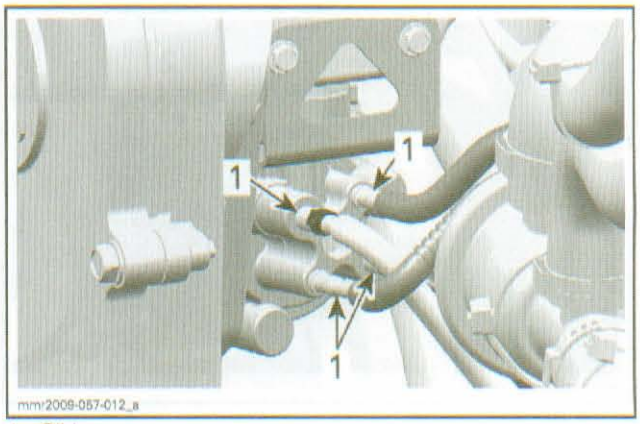

1. *Oil hoses*

NOTICE **Do not pull on the oil hoses to avoid breaking oil pump fittings.**

17. Unplug oil pump connector.

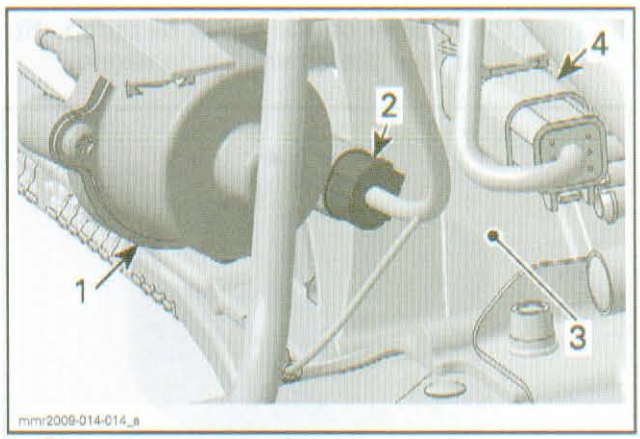

1. *Oil pump*
2. *Oil pump connector*
3. *Chaincase*
4. *Diagnostic connector*

18. Remove screws securing the oil pump support.

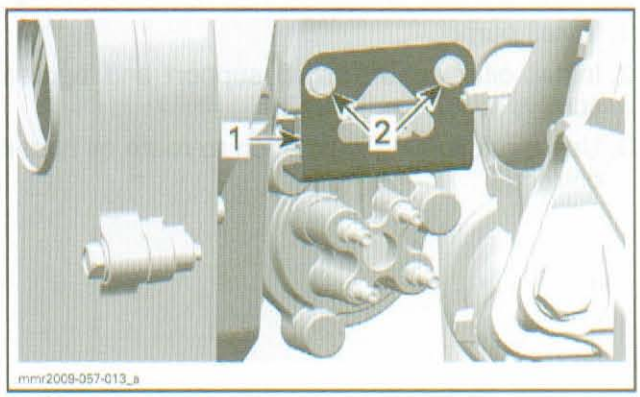

1. *Oil pump support*
2. *Support screws*

19. Remove the oil pump support.
20. Turn oil pump toward engine until oil injection pump is unlocked from oil injection tank.

www.midwestmanuals.com

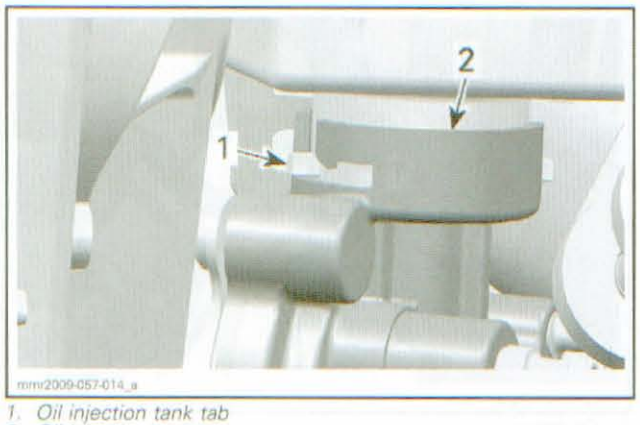

1. Oil injection tank tab
2. Oil injection pump

21. Place a rag under oil pump to catch oil spillage.
22. Lower oil pump to remove it from oil tank.

Oil Pump Inspection

1. Check the strainer on the top of oil pump. Replace oil pump if the strainer is damaged.



1. Oil pump strainer

Oil Pump Installation

The installation is the reverse of the removal procedure. However, pay attention to the following.

1. Install pump.
2. Install oil injection pump support and tighten screws to 1 N•m (9 lbf•**in**).
3. Use the following illustration to route oil hoses correctly.

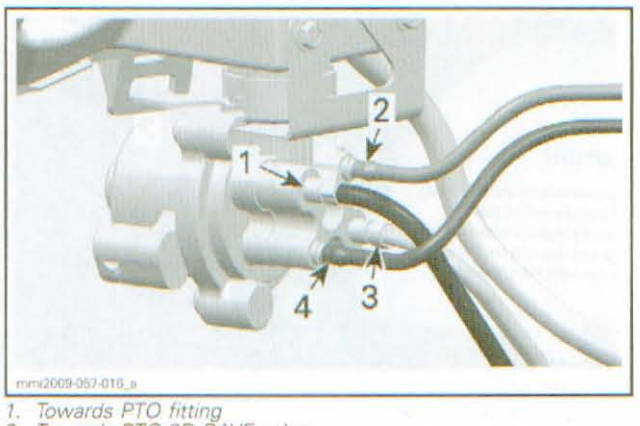

1. Towards PTO fitting
2. Towards PTO 3D RAVE valve
3. Towards MAG fitting
4. Towards MAG 3D RAVE valve

4. Install all other removed parts.
5. Fill up oil tank using recommended synthetic blend oil. See *RECOMMENDED OIL* at the beginning of this section.
6. Bleed oil injection system. Refer to *OIL PUMP BLEEDING* for proper procedure.

⚠ WARNING

Make sure the quick disconnect fitting of the fuel inlet hose at ECM is not leaking.

Oil Pump Bleeding

1. Connect B.U.D.S. Refer to *COMMUNICATION TOOLS AND B.U.D.S.* section.
2. Start vehicle.
3. In B.U.D.S., press **Read Data**.
4. Select **Setting** folder then the **ECM** page.
5. Verify for same codes in B.U.D.S. and on oil pump sticker.

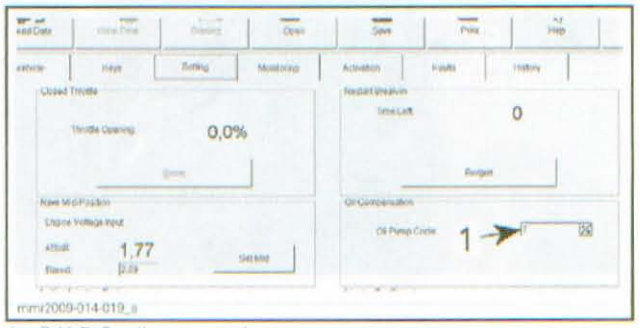

1. B.U.D.S. oil pump code

www.midwestmanuals.com



BACK OF OIL PUMP
1. Oil pump code (0 to 9)

6. Correct the oil pump code if required.
7. Select **Activation** folder then the **ECM** page.
8. Press the **Oil System Bleeding** button. Wait until engine returns to idle RPM.
9. Check for air into hoses. If so, the bleeding procedure must be repeated once more.

OIL TANK

Oil Tank Removal

1. Remove the primary air intake silencer. Refer to *AIR INTAKE SYSTEM* section.
2. Refer to *BODY* section to remove the following parts:
   - Both side panels
   - Console.
3. Empty oil tank completely by siphoning injection oil.

Rewind Starter Equipped Models

4. Remove the muffler. Refer to *EXHAUST SYSTEM* section.
5. Remove the acoustic panel.

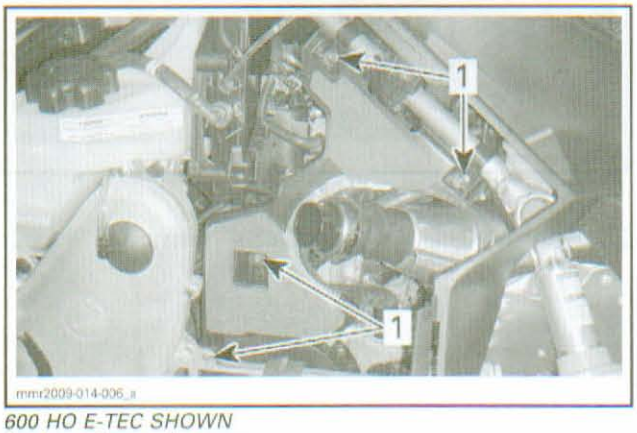

600 HO E-TEC SHOWN
1. Acoustic panel screws

6. Remove rewind starter handle. Refer to *REWIND STARTER* section.
7. Remove rewind starter handle housing. Refer to *BODY* section.

500SS/600/800R

8. Detach the ECM from oil tank.



TYPICAL
1. ECM
2. Push on tab to release

600 HO E-TEC

9. Remove the battery relay jumper from oil tank.

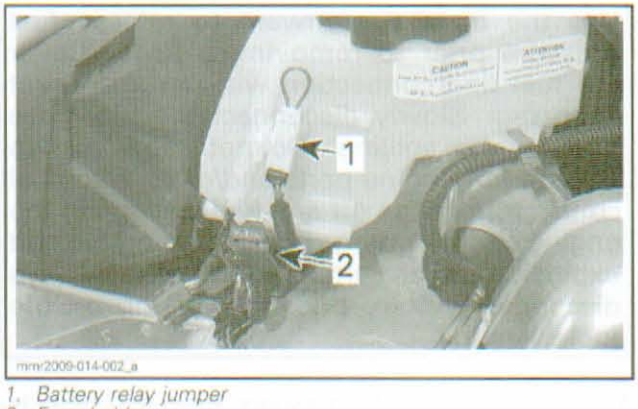

1. Battery relay jumper
2. Fuse holder

10. Remove the 30 A fuse.



1. 30 A fuse location

www.midwestmanuals.com

11. Using B.U.D.S. software, release fuel pressure. Refer to *COMMUNICATION TOOLS AND B.U.D.S.* section.
12. Unplug the quick disconnect fitting of the fuel inlet hose at ECM.

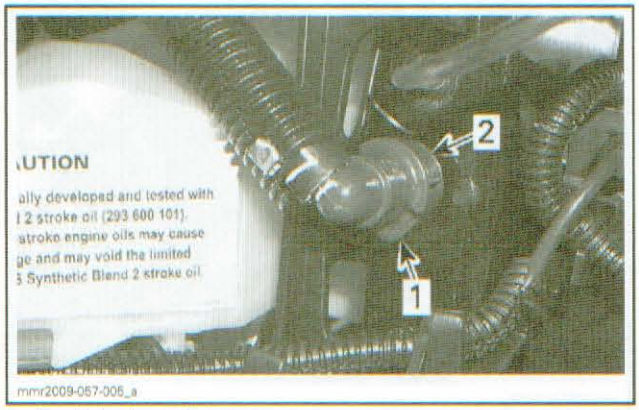

1. Fuel inlet hose fittin
2. Press here to disengage the fitting

NOTE: Place a container under the connector to recover residual fuel remaining in the system.

⚠ WARNING

Use the B.U.D.S. software to release fuel pressure prior to removing a hose. Cover the fuel line connection with an absorbent shop rag. Slowly disconnect the fuel hose to minimize spilling. Do not allow fuel to spill on hot engine parts and/or on electrical connectors. Wipe off any fuel spillage in the engine compartment. Fuel is flammable and explosive under certain conditions. Always disconnect battery prior to working on the fuel system.

13. Detach the ECM support from oil tank by pressing the upper tab and sliding the support outwards.

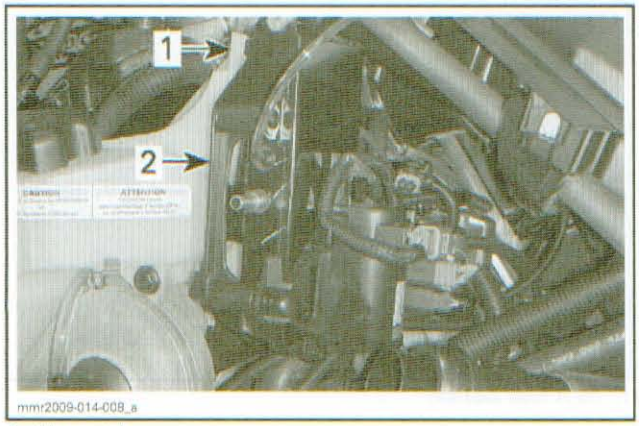

1. Upper tab
2. ECM support

14. Remove the oil pump from the oil tank. Refer to *OIL PUMP (600 HO E-TEC)* in this section.

All Models

15. Disconnect the crankcase vent hose from oil tank.
16. Cut locking tie securing wiring harness to oil tank.

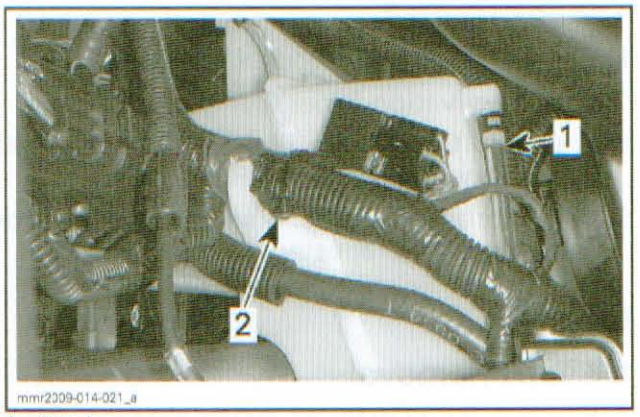

1. Vent hose
2. Cut this locking tie

17. Detach fuse holders from oil tank.
18. Disconnect the oil level sensor.
19. Detach the diagnostic connector housing from oil tank.

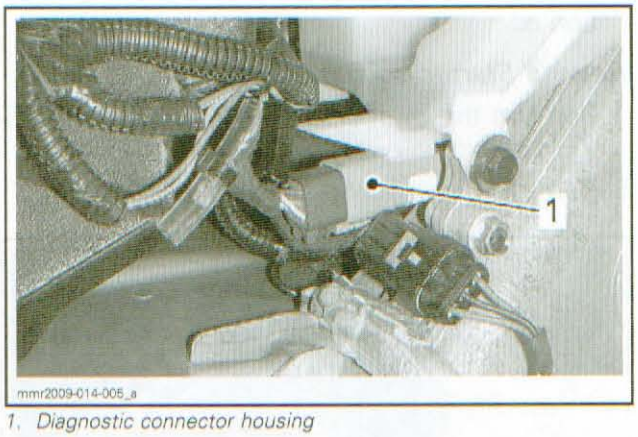

1. Diagnostic connector housing

20. Remove the RH side frame member.

www.midwestmanuals.com

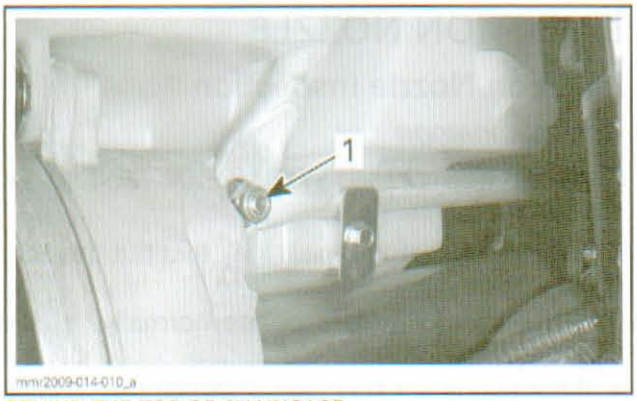

BEHIND THE TOP OF CHAINCASE
1. *Side frame member lower bolt*

21. Remove holder retaining oil tank to side frame member brace.

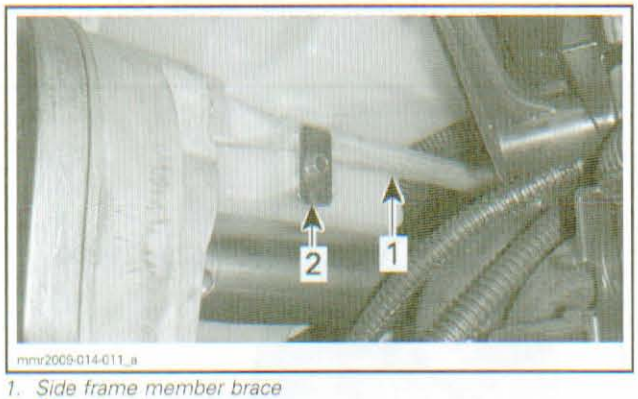

1. *Side frame member brace*
2. *Oil tank holder*

22. Remove screws securing oil tank to chaincase.



1. *Oil tank screws*

23. Remove tank from vehicle.

Oil Tank Installation

The installation is the reverse of the removal procedure.

600 HO E-TEC

⚠ WARNING

Make sure the quick disconnect fitting of the fuel inlet hose at ECM is not leaking.

OIL LEVEL SENSOR

Oil Level Sensor Test

Measure resistance of the oil level sensor using a FLUKE 115 MULTIMETER (P/N 529 035 868).

SENSOR POSITION	RESISTANCE
Sensor exposed to air	High value or infinite (OL)
Sensor soaked in oil	0.2 Ω (closed)

If resistance test fails, replace sensor.

Oil Level Sensor Removal

1. Remove rewind starter handle housing. Refer to *BODY* section.
2. Unplug oil level sensor connector.

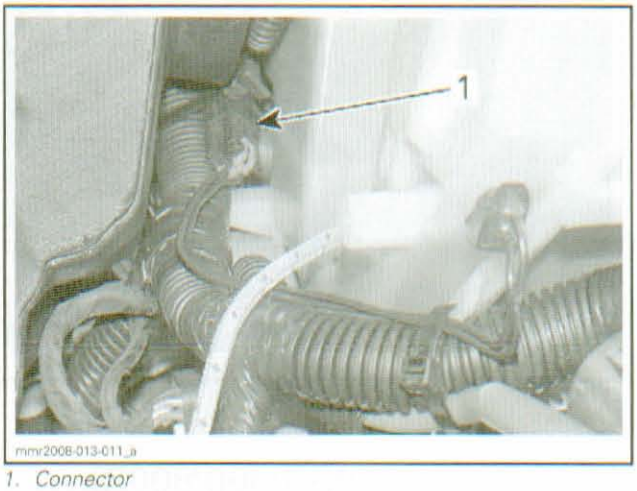

1. *Connector*

3. Using a small screwdriver, push and hold tab to release then pull on sensor to remove.

www.midwestmanuals.com

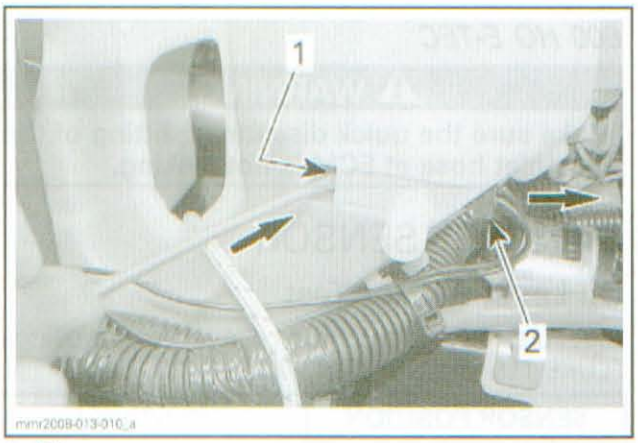

1. Tab
2. Sensor

Oil Level Sensor Installation

For installation, reverse the removal procedure. However, pay attention to the following.

Ensure sensor wire is secured with a locking tie. Ensure wire does not apply any tension on sensor. Wire must have a loop.

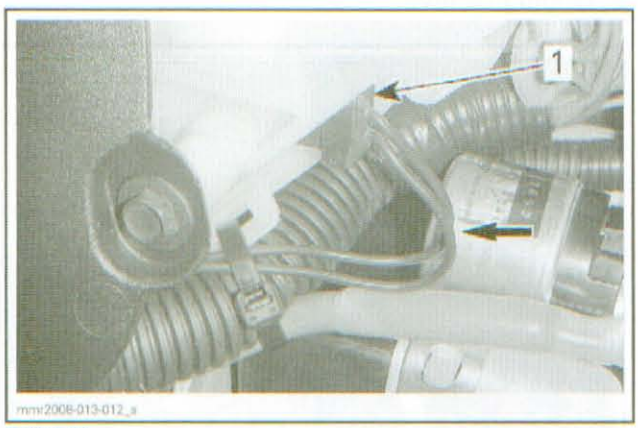

TYPICAL
1. Sensor

OIL FILTER (500SS/600/800R)

Oil Filter Removal

Remove oil tank. Refer to *OIL TANK REMOVAL* in this section.

To remove oil filter from tank, turn clockwise and pull.

Oil Filter Installation

For installation, reverse the removal procedure. However, pay attention to the following.

Bleed oil pump. See procedure further.

INJECTION NOZZLE

Injection Nozzle Inspection

500SS/600/800R

Carry out the *OIL SYSTEM LEAK TEST* as described in this section.

If test is successful, repeat leak test but this time at 20.7 kPa (3 PSI).

- If the injector nozzle opens normally, it is in good condition.
- If the test is not successful, repeat test at injector nozzle as described in this topic.

All Engines

Lift engine to access the injector nozzles.

Use the VACUUM/PRESSURE PUMP (P/N 529 021 800).



Test check valve of injection nozzle as follows.

PUMP SETTING	Set to VACUUM	Set to PRESSURE
TO DO	Activate pump several times	Slowly activate pump and listen to check valve
RESULT	Air must not flow through check valve	You should hear it release pressure at approximately 20.7 kPa (3 PSI)
ACTION	**Success:** Perform next test	**Success:** Check valve is good
	Failed: Replace injection nozzle	**Failed:** Replace injection nozzle

www.midwestmanuals.com

Injection Nozzle Removal

NOTICE Do not remove injection nozzle needlessly. It is likely to be damaged.

1. To gain access to the injector nozzles, engine must be lifted. Refer to *ENGINE REMOVAL AND INSTALLATION* for the procedure.
2. Clean injection nozzle area to remove oil or dirt.
3. Heat injection nozzle then pull it out of crankcase.

Injection Nozzle Installation

1. Prior to coating it with Loctite, make sure check valve body is clean and dry. Clean from dirt or oil, if any, with PULLEY FLANGE CLEANER (P/N 413 711 809).
2. Apply LOCTITE 648 (GREEN) (P/N 413 711 400) on the outer diameter of the check valve (machined section). Take care that Loctite is ONLY in this area.

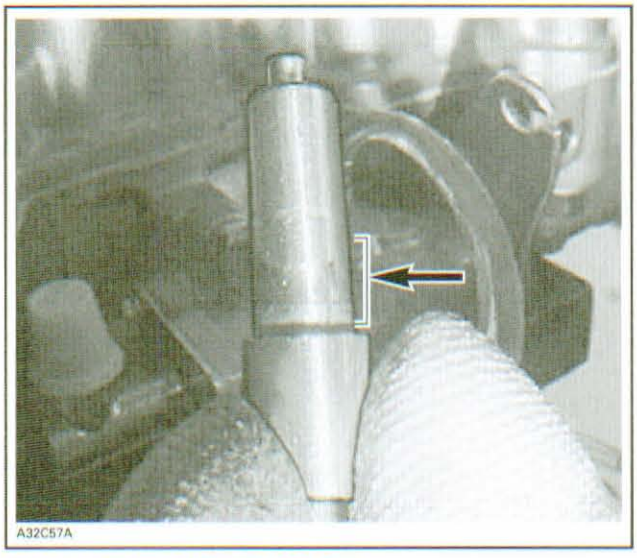

APPLY LOCTITE ON THIS AREA ONLY

500SS/600/800R

3. Install the check valve in the correct position as described on next photos into the crankcase lower side.

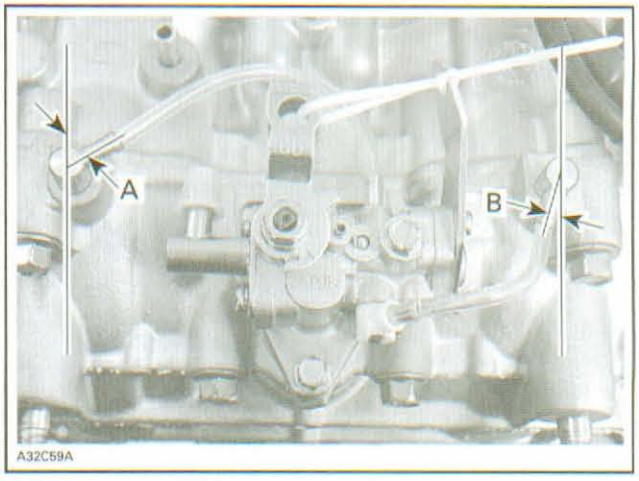

TYPICAL
A. PTO side 45° ± 5° from cylinder axis to the top
B. MAG side 20° ± 5° from cylinder axis to the bottom

All Models

4. Punch in the injection nozzle carefully with a plastic hammer.
5. Clean the crankcase from surplus of Loctite 648 with a rag.
6. Reinstall engine into vehicle. Refer to *ENGINE* section.

www.midwestmanuals.com

www.midwestmanuals.com

COOLING SYSTEM

SERVICE TOOLS

Description	Part Number	Page
LARGE HOSE PINCHER	529 032 500	85–86
SMALL HOSE PINCHER	295 000 076	86
SUPERTANIUM™ BIT	529 031 800	87
TEST CAP	529 035 991	85
VACUUM/PRESSURE PUMP	529 021 800	85–86

SERVICE PRODUCTS

Description	Part Number	Page
BRP PREMIXED COOLANT	219 700 362	83
LOCTITE 380 (BLACK MAX)	413 408 300	88

www.midwestmanuals.com

600 HO E-TEC Engine Shown

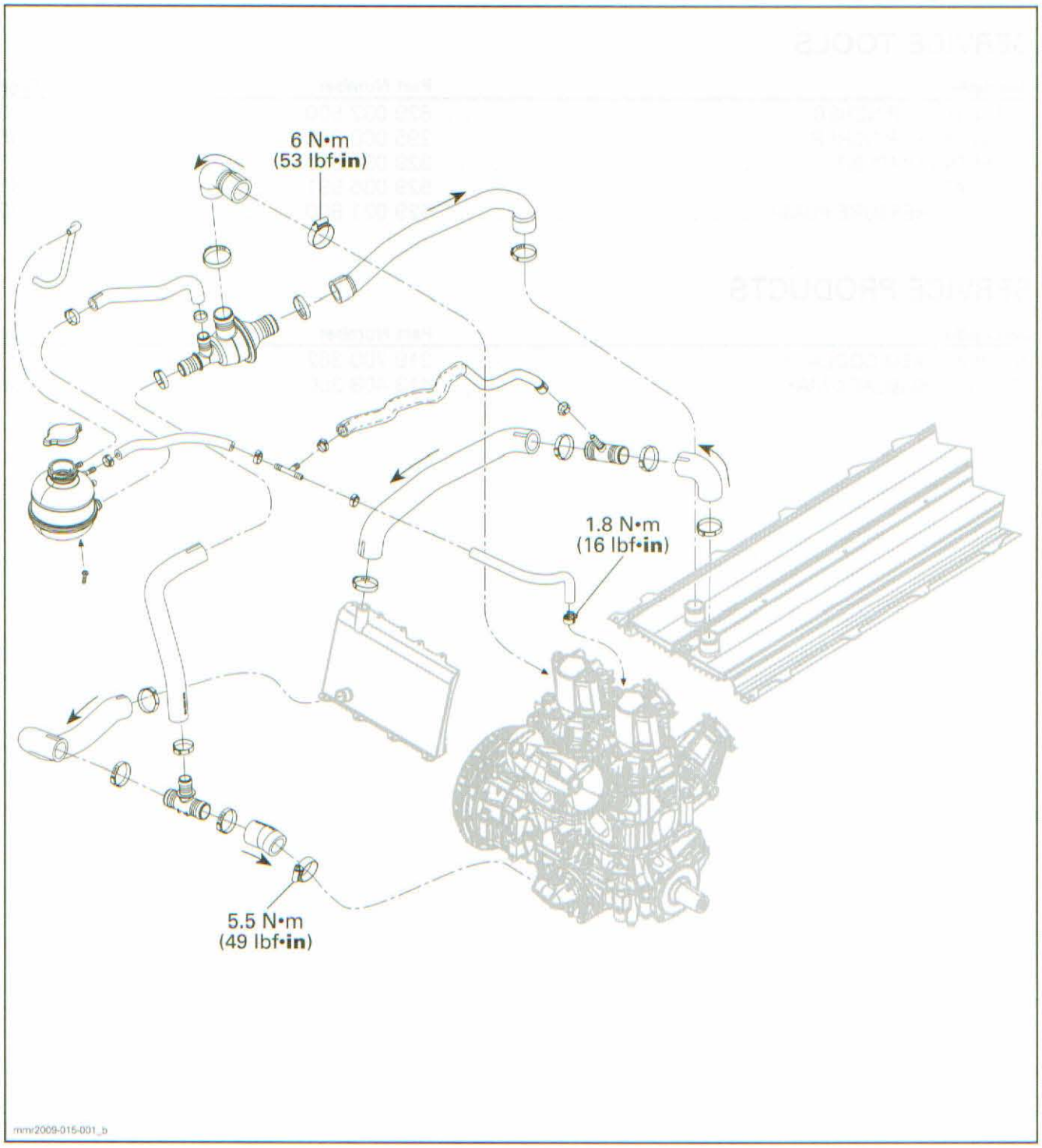

www.midwestmanuals.com

GENERAL

NOTE: On applicable models, it is a good practice to check for fault codes using B.U.D.S. software as a first troubleshooting step. Refer to the *MONITORING SYSTEM/FAULT CODES* section.

During assembly/installation, use torque values and service products as in the exploded views.

Clean threads before applying a threadlocker. Refer to *SELF-LOCKING FASTENERS* and *LOCTITE APPLICATION* at the beginning of this manual for complete procedure.

⚠ WARNING

Torque wrench tightening specifications must be strictly adhered to.
Locking devices (e.g.: locking tabs, elastic stop nuts, self-locking fasteners, cotter pins, etc.) must be replaced with new ones.

MAINTENANCE

COOLANT REPLACEMENT

Recommended Coolant

Use BRP PREMIXED COOLANT (P/N 219 700 362) or a blend of 50% antifreeze with 50% distilled water.

To prevent antifreeze deterioration, always use the same brand. Never mix different brands unless cooling system is completely flushed and refilled.

NOTICE **To prevent rust formation or freezing condition, always replenish the system with the BRP premixed coolant or with 50% antifreeze and 50% water. Do not use tap water, straight antifreeze or straight water in the system. Tap water contains minerals and impurities which build up in the system. During cold weather, straight water causes the system to freeze while straight antifreeze thickens (like slush ice) and does not have the same efficiency. Always use ethylene glycol antifreeze containing corrosion inhibitors specifically recommended for aluminum engines.**

Cooling System Draining

⚠ WARNING

Never drain or refill the cooling system when engine is hot.

Remove RH side panel and hood. Refer to *BODY.*

Remove muffler and tuned pipe. Refer to *EXHAUST SYSTEM.*

Place a large drain pan under the vehicle bottom pan.

Unplug the coolant hose at water pump to drain coolant.

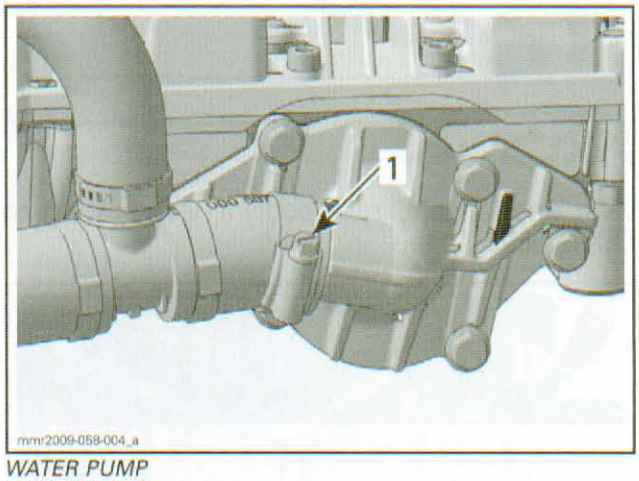

WATER PUMP
1. Unscrew clamp

When the coolant level is low enough, lift the rear of vehicle to drain the radiators.



TYPICAL VIEW

Cooling System Refill and Bleeding

Apply parking brake.

Lift front of vehicle as shown and support it safely.

www.midwestmanuals.com

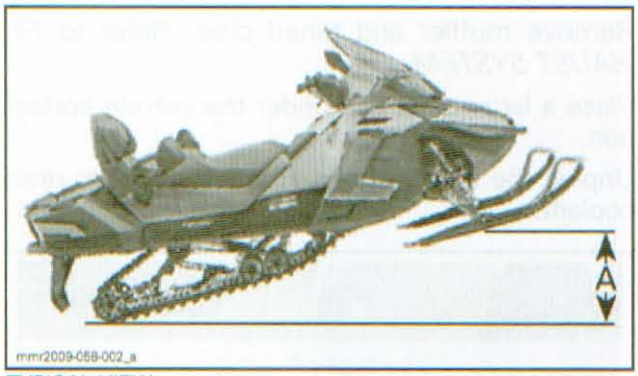

TYPICAL VIEW
A. At least 60 cm (24 in)

With engine cold, refill coolant reservoir up to COLD LEVEL line.

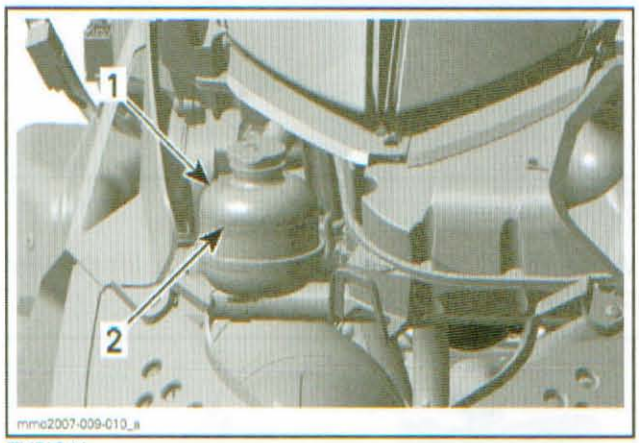

TYPICAL
1. Coolant reservoir
2. COLD LEVEL line

Start engine.

Refill up to line while engine is idling until rear radiators are warm to the touch (about 4 to 5 minutes).

NOTE: Always monitor coolant level while filling reservoir to avoid emptying and thus allowing air to enter the system.

Install pressure cap.

Lower vehicle back on the ground.

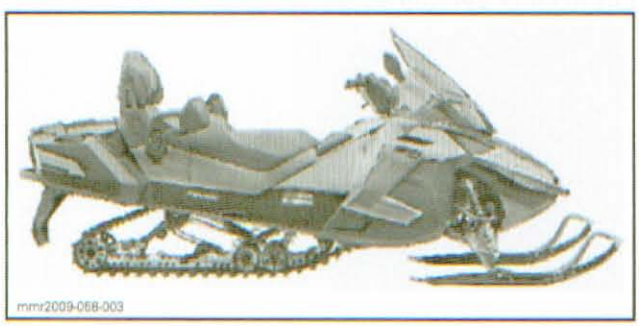

Lift rear of vehicle and support it safely.



TYPICAL VIEW

⚠ WARNING

Before revving engine, ensure that the track is free of particles which could be thrown out while track is rotating. Keep hands, tools, feet and clothing clear of track. Always lift the snowmobile on a wide-base stand with a rear deflector panel. Ensure no one is standing in close proximity to the snowmobile, especially at the rear of the track. Centrifugal force could cause debris, damaged or loose studs, pieces of torn track, or an entire track to be violently thrown backwards out of the frame with tremendous force, possibly resulting in the loss of a leg or other serious injury.

Remove parking brake.

Activate throttle lever 3 - 4 times to bring engine speed to 7000 RPM.

Apply the brake.

Lower vehicle back on ground.

Stop engine.

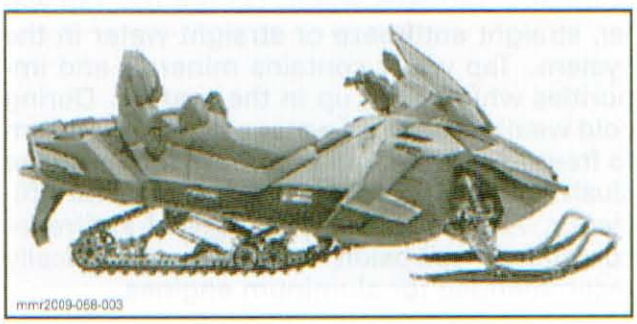

Add coolant up to 15 mm (1/2 in) above the COLD LEVEL line.

www.midwestmanuals.com

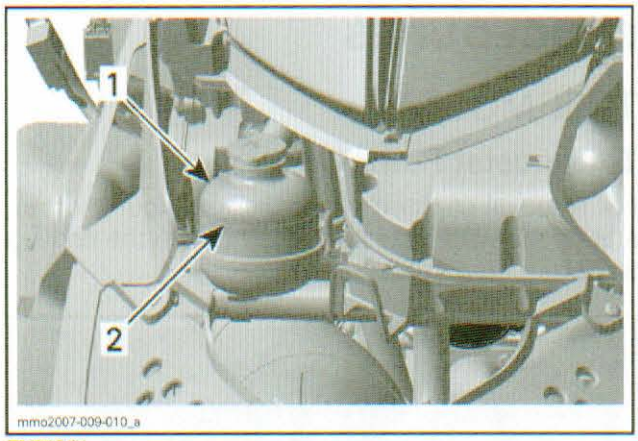

TYPICAL
1. *Coolant reservoir*
2. *Coolant 15 mm (1/2 in) above COLD LEVEL line*

When engine has completely cooled down, recheck coolant level in coolant reservoir and refill up to line if needed.

Check for coolant mixture freezing point.

COOLANT MIXTURE RECOMMENDED FREEZING POINT
-37°C (-35°F)

Adjust mixture as necessary.

Reinstall removed parts.

INSPECTION

COOLING SYSTEM LEAK TEST

NOTE: This test confirms if there is a leak in the cooling system, including the engine.

⚠ WARNING

To prevent potential burns, do not remove the radiator cap if the engine is hot.

Remove hood.

Install the TEST CAP (P/N 529 035 991) on coolant reservoir.

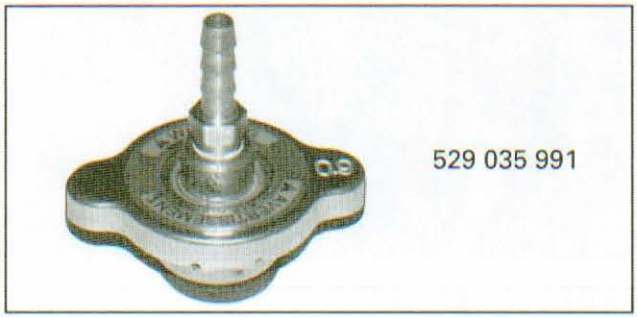

Connect the VACUUM/PRESSURE PUMP (P/N 529 021 800) to the test cap nipple.

Pressurize system through coolant reservoir.

TEST PRESSURE
100 kPa (15 PSI)

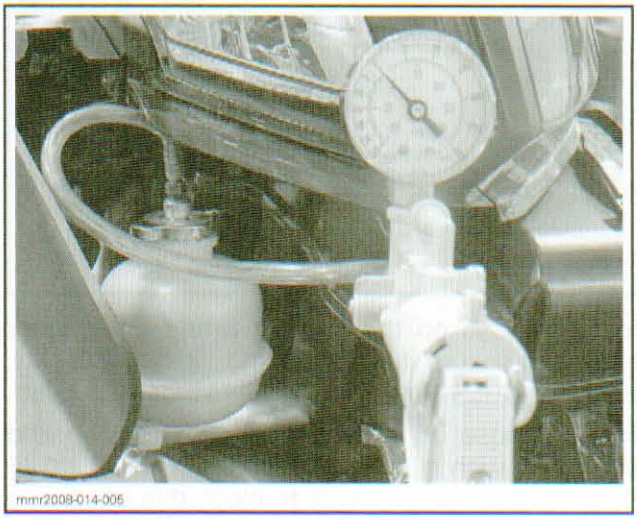

If pressure drops, check all hoses and engine for coolant leaks. Spray a soap/water solution and look for air bubbles.

If no external leak is found and pressure drops, carry out the *ENGINE LEAK TEST* to find the engine internal leak.

ENGINE COOLING SYSTEM LEAK TEST (800R)

NOTE: An engine leak test should be performed prior to installing engine in vehicle each time the engine is disassembled.

On the water pump side, install a suitable hose on the water pump housing and block it with a LARGE HOSE PINCHER (P/N 529 032 500).

www.midwestmanuals.com

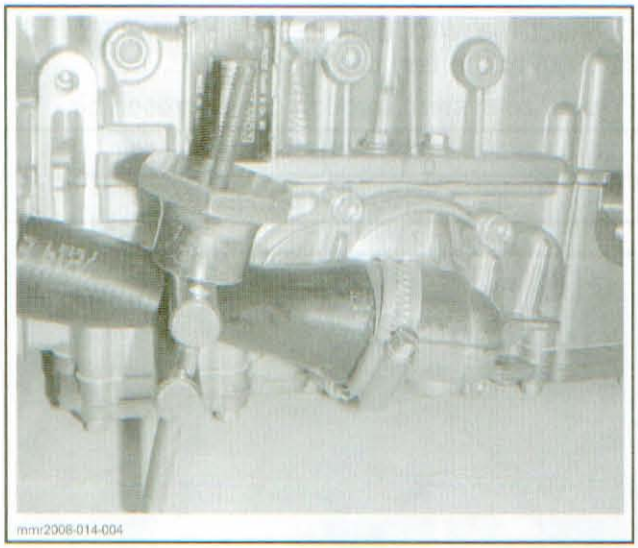

Install a hose on the straight fitting on cylinder head and secure it with a clamp. Install a SMALL HOSE PINCHER (P/N 295 000 076) to block the hose.

Install a hose on the water outlet housing and secure it with a clamp. Install a LARGE HOSE PINCHER (P/N 529 032 500) to block this hose.

Install the VACUUM/PRESSURE PUMP (P/N 529 021 800) on the small elbow fitting.

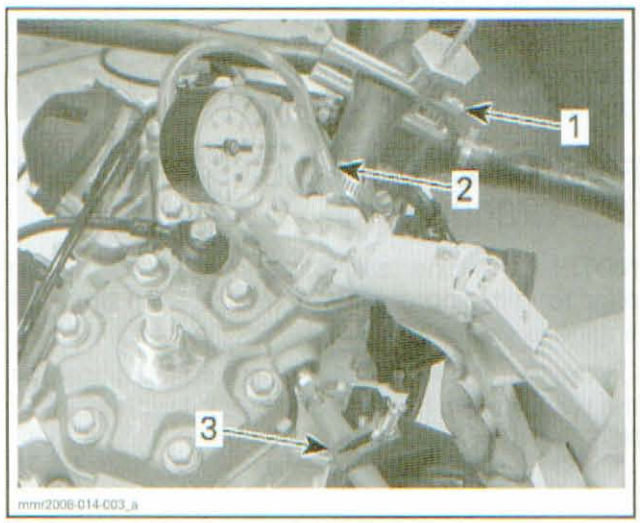

1. *Hose blocked on water outlet housing*
2. *Small elbow fitting*
3. *Hose blocked on straight fitting*

Pressurize the engine.

TEST PRESSURE
100 kPa (15 PSI)

If pressure drops, spray a soap/water solution onto engine jointed surfaces and look for air bubbles.

PROCEDURES

THERMOSTAT

Thermostat Removal

For removal of thermostat, block all four thermostat hoses with hose pinchers or drain the cooling system (see above).

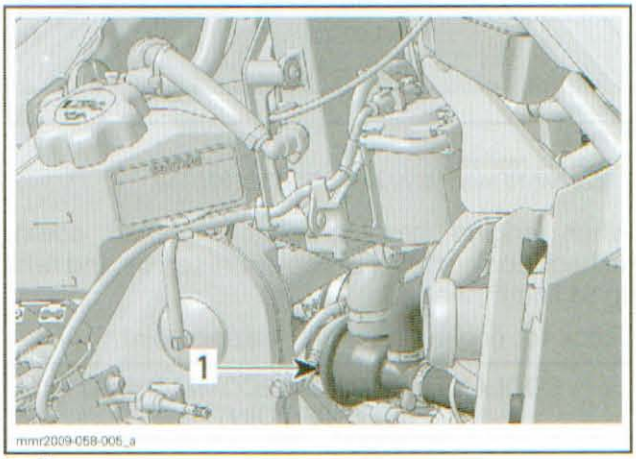

1. *Thermostat*

Remove LH and RH panels. Refer to *BODY.*

Remove pulley guard. Refer to *DRIVE SYSTEM/ BRAKE.*

Remove primary air intake silencer. Refer to *AIR INTAKE SYSTEM.*

Remove muffler. Refer to the *EXHAUST SYSTEM* section.

Remove acoustic panel.

Cut Oetiker clamps, unplug hoses and remove thermostat housing.

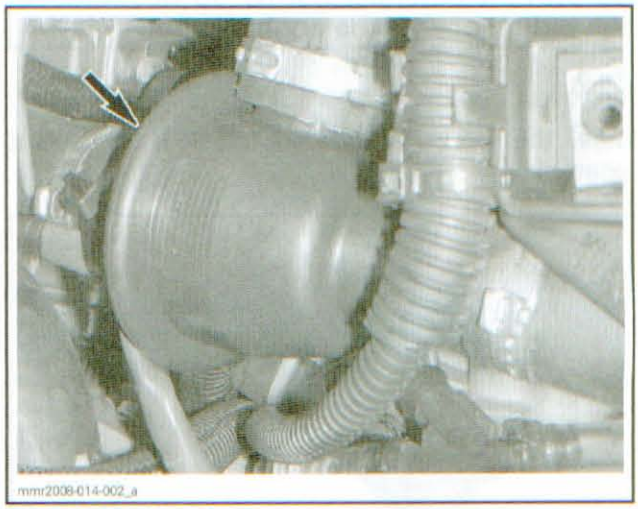

THERMOSTAT HOUSING

www.midwestmanuals.com

Thermostat Test

To check thermostat, put in water and heat water. Thermostat should start to open when water temperature reaches the following degree.

ENGINE	TEMPERATURE
All	37°C (99°F)

It will be almost fully open at 55°C (131°F).

Thermostat Installation

For installation, reverse the removal procedure.

Refill cooling system as described in this section.

RADIATOR CAP

Using a pressure cap tester, check the relief pressure of radiator cap.

If the test failed, install a new 90 kPa (13 PSI) cap. Do not exceed this pressure.

FRONT RADIATOR

Front Radiator Cleaning and Inspection

Remove all debris between radiator fins. A clean radiator is more efficient than a dirty one.

Check if the radiator fins are damaged. Replace the front radiator if necessary.

NOTE: A radiator with many broken fins does not work properly.

Front Radiator Removal

Drain cooling system.

Remove LH panel. Refer to *BODY*.

Remove pulley guard. Refer to *DRIVE SYSTEM/BRAKE*.

Remove primary air intake silencer. Refer to *AIR INTAKE SYSTEM*.

Remove carburetors or throttle body according to vehicle. Refer to the *TM CARBURETORS* or *E-TEC-DIRECT FUEL INJECTION*.

Use a SUPERTANIUM™ BIT (P/N 529 031 800).

From underneath frame, drill the lower rivets of front radiator or grind them with a grinding disk.

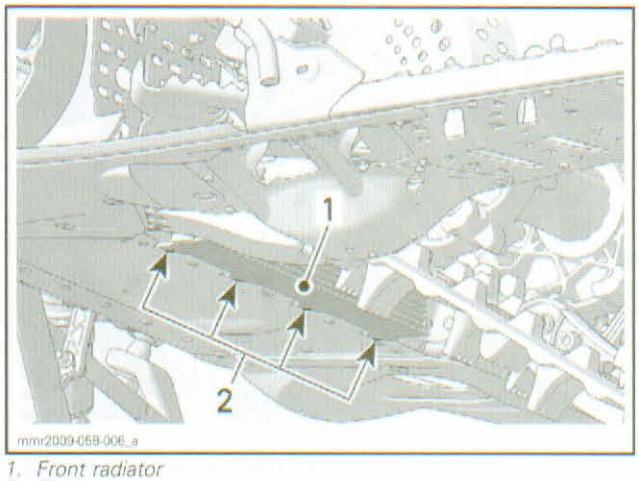

1. *Front radiator*
2. *Rivets*

From engine compartment, grind the 3 rivets retaining the radiator protector.



1. *Radiator protector (in front of track)*

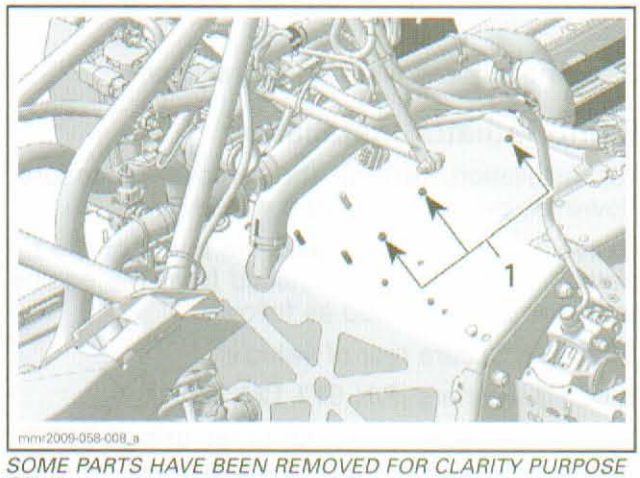

SOME PARTS HAVE BEEN REMOVED FOR CLARITY PURPOSE ONLY

1. *Radiator protector rivets (in engine compartment)*

Remove the upper rivets retaining the front radiator to the frame (a zip gun may be used).

www.midwestmanuals.com

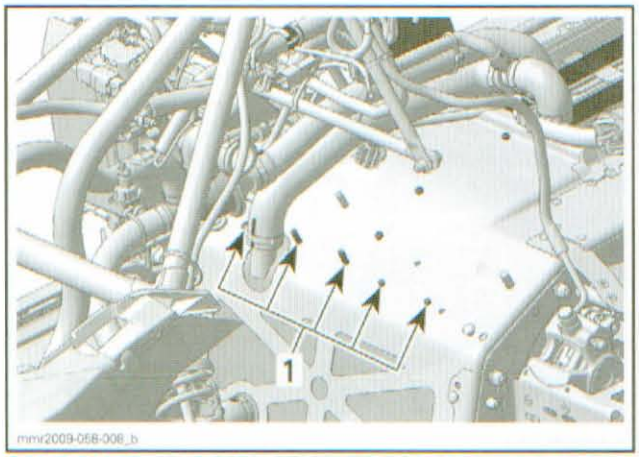

SOME PARTS HAVE BEEN REMOVED FOR CLARITY PURPOSE ONLY
1. Upper rivets of front radiator

Remove the rear RH engine mount nuts.

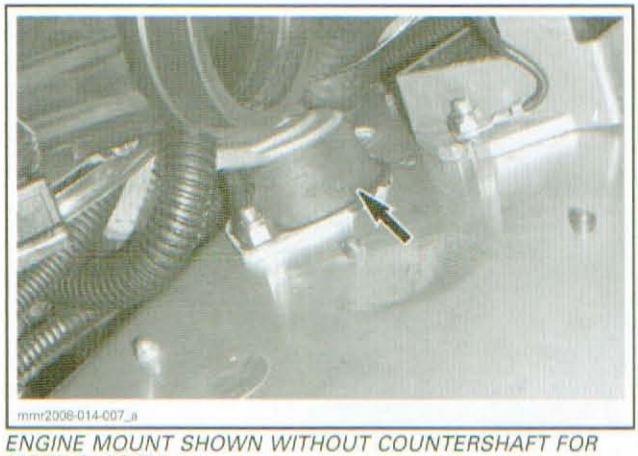

ENGINE MOUNT SHOWN WITHOUT COUNTERSHAFT FOR MORE CLARITY

Remove the Oetiker clamps securing coolant hoses.

Disconnect hoses and remove radiator.

Front Radiator Installation

For installation, reverse the removal procedure. However, pay attention to the following.

To avoid removing the track, the rivets of the radiator protector will be installed from the engine compartment. Proceed as follows:

1. Lift and secure rear of vehicle.
2. Use 3 washers (P/N 517 124 300).
3. Glue washers in protector bores using LOCTITE 380 (BLACK MAX) (P/N 413 408 300).

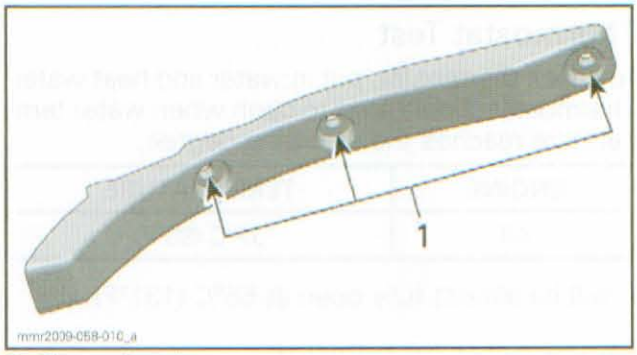

1. Glue washers here

4. From underneath frame, position protector.

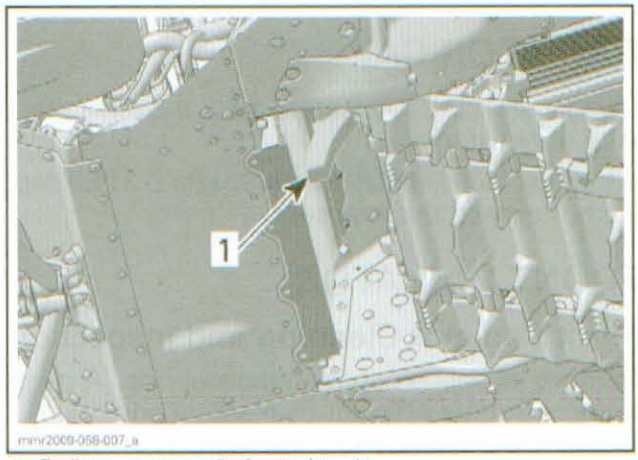

1. Radiator protector (in front of track)

5. From engine compartment, secure protector with the rivets. Ensure to insert the rivet ends in washers.

Reinstall remaining removed parts.

Refill cooling system as described in this section.

REAR RADIATOR

Rear Radiator Cleaning and Inspection

Remove all debris between radiator fins. A clean radiator is more efficient than a dirty one.

Check if the radiator fins are damaged. Replace the rear radiator if necessary.

NOTE: A radiator with many broken fins does not work properly.

Rear Radiator Removal

Drain cooling system, see *COOLING SYSTEM DRAINING* in this section.

Remove rear suspension. Refer to the *REAR SUSPENSION* section.

Remove fuel tank. Refer to *FUEL TANK/FUEL PUMP*.

www.midwestmanuals.com

Remove luggage rack as necessary according to vehicle.

Remove snow guard.

Using a grinding disk, grind all rivet rows retaining rear radiator to frame. Work from top of frame.

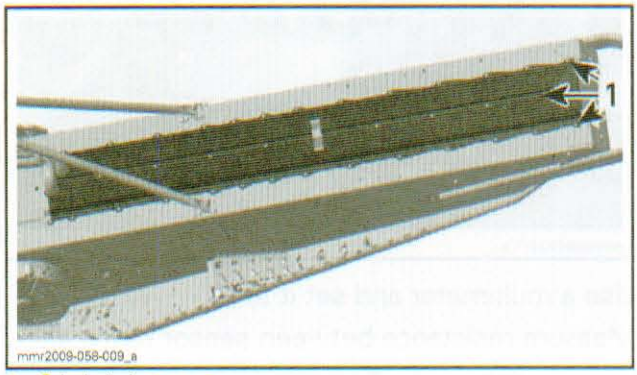

1. Grind all rivet rows

NOTE: When pushing the grinded rivets out, support the frame around the rivet with a socket on the opposite side to avoid warpage.

Unplug coolant hoses from rear radiator then remove radiator from vehicle.

Rear Radiator Installation

The installation is the reverse of the removal procedure.

NOTE: If traction enhancing products (studs) are used on vehicle, install the appropriate radiator protector. Refer to *TRACK* to choose the proper protectors kit.

Refill cooling system as described in this section.

COOLANT RESERVOIR

Coolant Reservoir Removal

Remove hood.

Remove RH side panel.

Siphon coolant reservoir and block the three lower hoses with pinchers.

Cut Oetiker clamps and remove all hoses from coolant reservoir.

Remove retaining screws to disengage coolant reservoir from frame.

Coolant Reservoir Inspection

Check if the reservoir is cracked or melted. Replace if necessary.

Coolant Reservoir Installation

For installation, reverse the removal procedure.

Refill cooling system as described in this section.

WATER PUMP

Refer to *BOTTOM END* section of the appropriate engine.

COOLANT TEMPERATURE SENSOR (CTS)

500SS/600/800R

NOTE: For the **600 HO E-TEC** models, Refer to the *E-TEC-DIRECT FUEL INJECTION* section.

General

When measuring the resistance with an ohmmeter, value is given for a temperature of 20°C (68°F). The value of a resistor varies with the temperature. The value for common resistor **increases** as the temperature increases. However, our temperature sensors are NTC types (Negative Temperature Coefficient) and work the opposite which means that the value **decreases** as the temperature increases. Use the table for sensor resistive values at given temperature.

The resistive value of a temperature sensor may test good at a certain temperature but it might be defective at other temperatures. If in doubt, try a new sensor.

Also remember this validates the operation of the sensor at room temperature. It does not validate the over temperature functionality.

To test it, the sensor could be removed and heated with a heat gun (ensure not to heat excessively) while it is still connected to the harness to see if the ECM will detect the high temperature condition and generate a fault code.

A good test would be to put sensor in a container filled with ice and water and measure resistance. Then, boil water and read resistance again. According to the table *CTS SENSOR TEMPERATURE*, the value would be approximately as follows.

www.midwestmanuals.com

TEMPERATURE CONDITION	RESISTANCE
Sensor in ice/water (0°C (32°F))	5705 Ω
Sensor in boiling water (100°C (212°F))	182.1 Ω

CTS Dynamic Test

Use B.U.D.S. software.

Look engine temperature in **Monitoring** tab of B.U.D.S. It should show the coolant temperature. Otherwise, perform the following test.

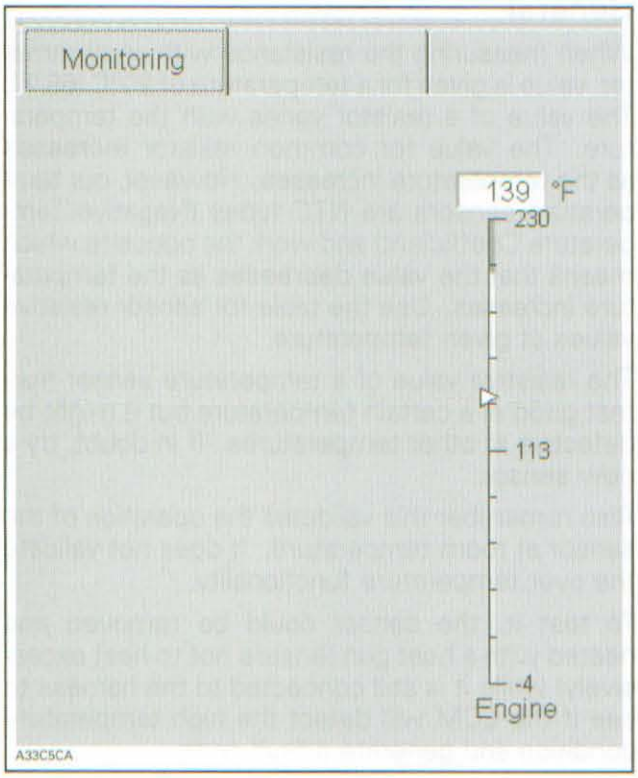

CTS Resistance Test

Remove RH side panel. Refer to *BODY*.

Remove pulley guard. Refer to *DRIVE SYSTEM/ BRAKE*.

Disconnect CTS sensor connector.

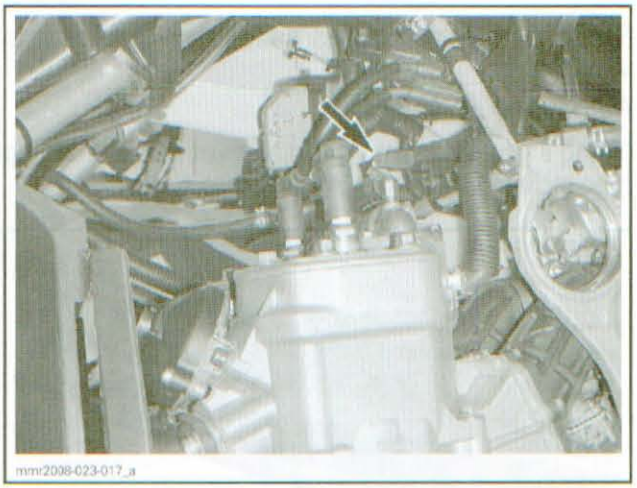

Use a multimeter and set it to Ω.

Measure resistance between sensor terminals.

CTS		RESISTANCE
Pin 1	Pin 2	Refer to *CTS SENSOR TEMPERATURE TABLE*

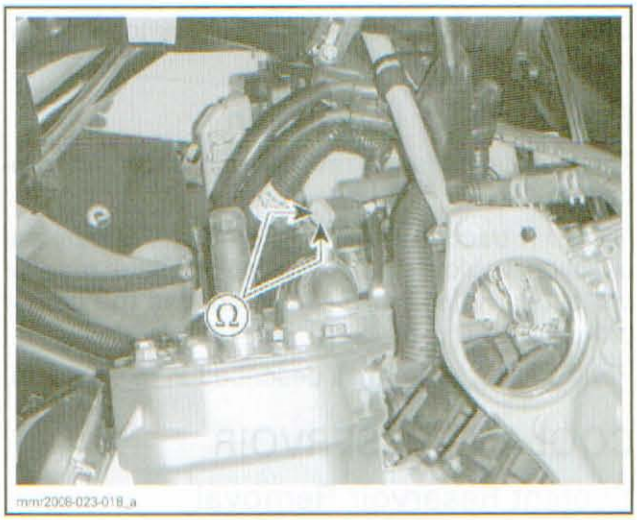

CTS SENSOR TEMPERATURE TABLE		
Unit		Resistance (Ω)
°C	°F	CTS
- 40	- 40	43610
- 30	- 22	25090
- 20	- 4	14900
- 10	14	9102
0	32	5705
10	50	3680
20	68	2436
25	77	2000
30	86	1651

www.midwestmanuals.com

CTS SENSOR TEMPERATURE TABLE		
Unit		Resistance (Ω)
°C	°F	CTS
40	104	1144
50	122	807.6
60	140	580.3
70	158	424.4
80	176	315.5
90	194	238
100	212	182.1
110	230	141.1
120	248	110.6
130	266	87.8
140	284	70.4
150	302	57.1
160	320	46.7
170	338	38.5
180	356	32
190	374	26.8
200	392	22.7

If resistance is out of specifications, replace sensor.

If resistance tests good, **reconnect** the CTS.

Disconnect the ECM connector.

Measure resistance as follows.

ECM CONNECTOR		RESISTANCE
Pin 1	Pin 21	Refer to *CTS SENSOR TEMPERATURE TABLE*

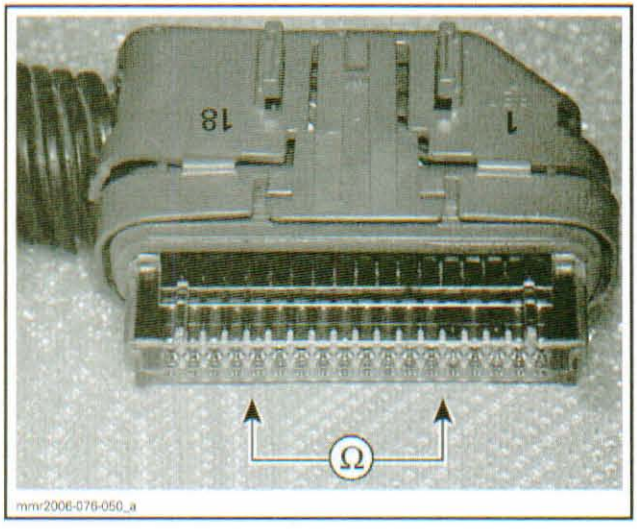

If resistance value is correct, sensor and wiring/connectors are good.

If resistance value is incorrect, repair/replace wiring/connectors between ECM and CTS.

CTS Replacement

Remove RH side panel. Refer to *BODY.*

Remove pulley guard. Refer to *DRIVE SYSTEM/ BRAKE.*

Remove primary air intake silencer. Refer to *AIR INTAKE SYSTEM.*

Remove driven pulley. Refer to *DRIVE SYSTEM/ BRAKE.*

Lift rear of vehicle to reduce coolant spillage.

Disconnect CTS connector.

Remove CTS.

Install the new CTS and torque to 12 N•m (106 lbf•**in**).

Reinstall removed parts.

Refill engine coolant. If an important quantity of coolant is spilled, bleed cooling system. Refer to *COOLING SYSTEM REFILL AND BLEEDING* in this section.

www.midwestmanuals.com

www.midwestmanuals.com

MAGNETO SYSTEM

SERVICE TOOLS

Description	Part Number	Page
CRANKSHAFT PROTECTOR	420 876 557	97
MAGNETO PULLER	529 035 547	98
PULLER RING	420 876 081	96

SERVICE PRODUCTS

Description	Part Number	Page
LOCTITE 243	293 800 060	98
LOCTITE 243 (BLUE)	293 800 060	98, 100, 102
LOCTITE 5910	293 800 081	104



Midwest Manuals
sales@midwestmanuals.com
www.midwestmanuals.com

www.midwestmanuals.com

500SS/600/800R

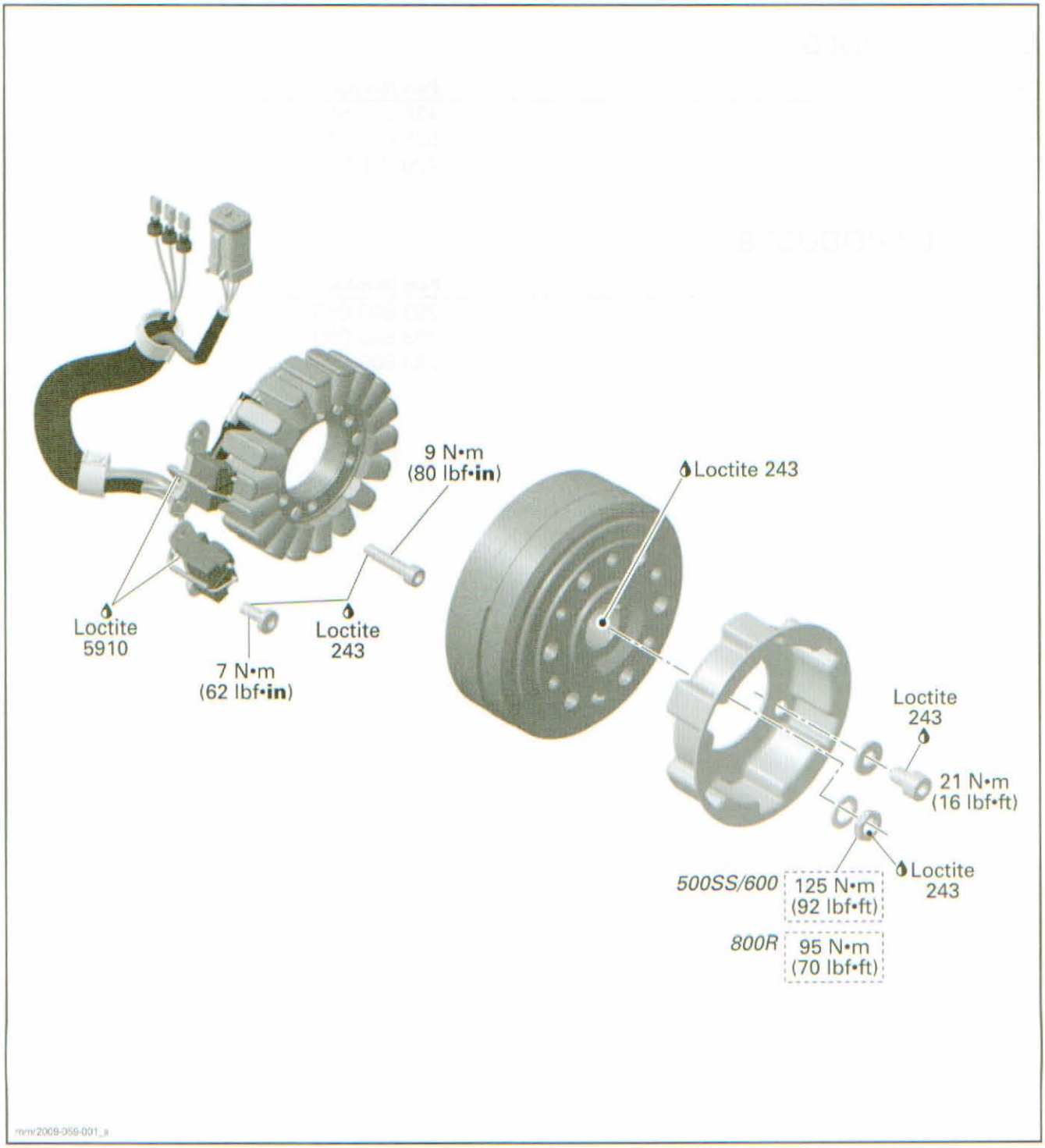

www.midwestmanuals.com

600 HO E-TEC

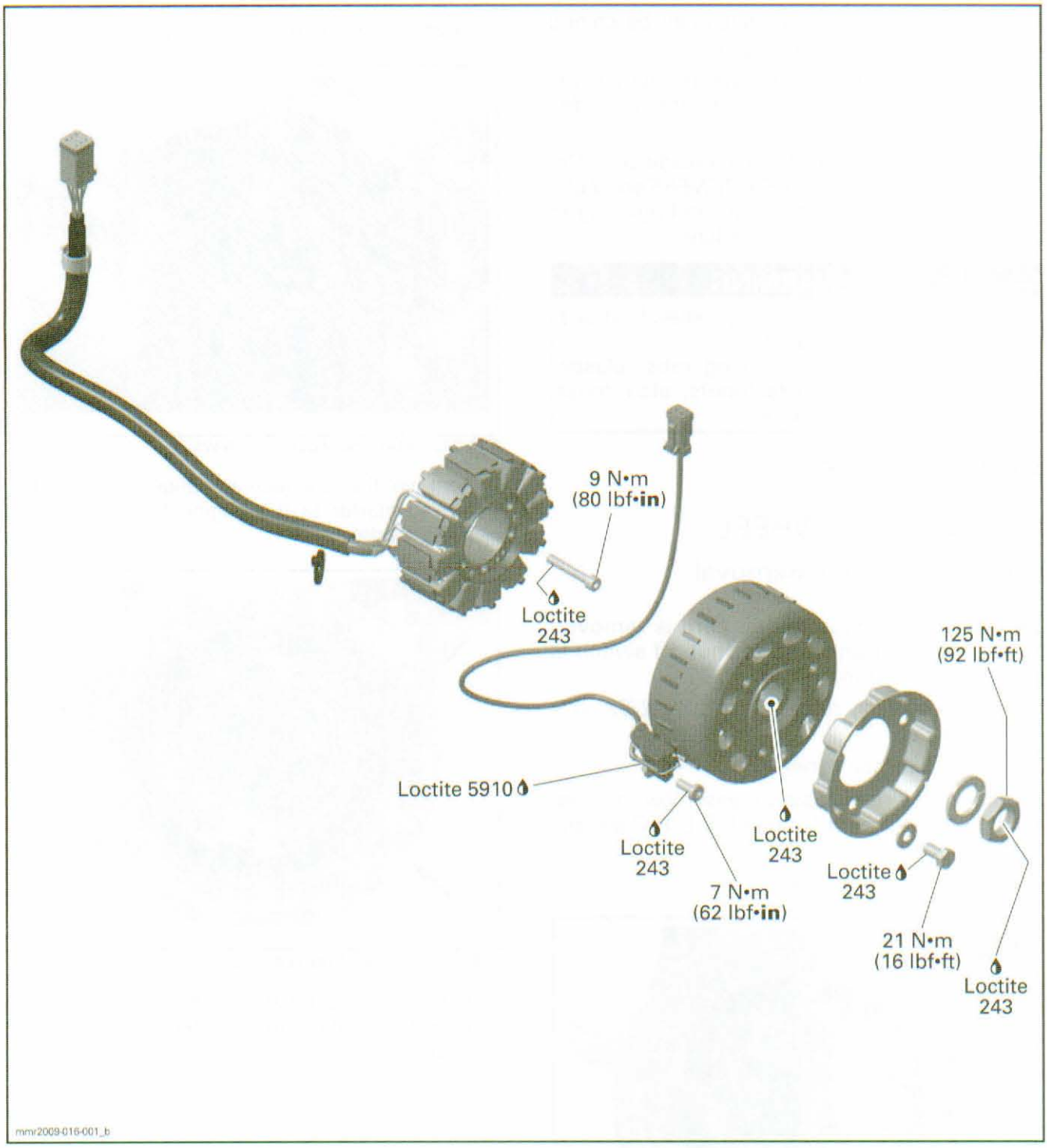

www.midwestmanuals.com

GENERAL

NOTE: The following procedures can be carried out without removing the engine.

During assembly/installation, use the torque values and service products as in the exploded views.

Clean threads before applying a threadlocker. Refer to the *SELF-LOCKING FASTENERS* and *LOCTITE APPLICATION* sections at the beginning of this manual for complete procedure.

⚠ WARNING

Torque wrench tightening specifications must be strictly adhered to.
Locking devices (e.g.: locking tabs, elastic stop nuts, self-locking fasteners, etc.) must be replaced with new ones.

PROCEDURES

MAGNETO FLYWHEEL

Magneto Flywheel Removal

⚠ CAUTION Ensure tether cord is removed from DESS post and engine shut-off switch is in the OFF position.

1. Remove muffler, refer to the *EXHAUST SYSTEM* section.
2. Remove acoustic panel.
3. Remove the rewind starter assembly (or magneto housing cover for 600 HO E-TEC electric start models).
4. Remove starting pulley.

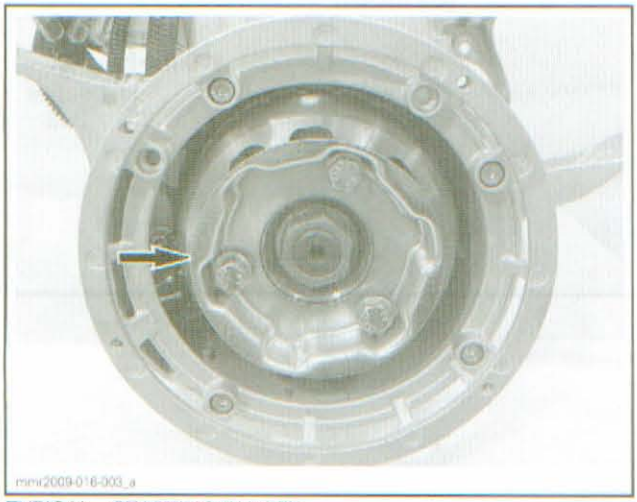

TYPICAL - STARTING PULLEY

NOTE: To remove starting pulley screws, hold magneto flywheel with a socket as shown as you remove the pulley retaining screws.

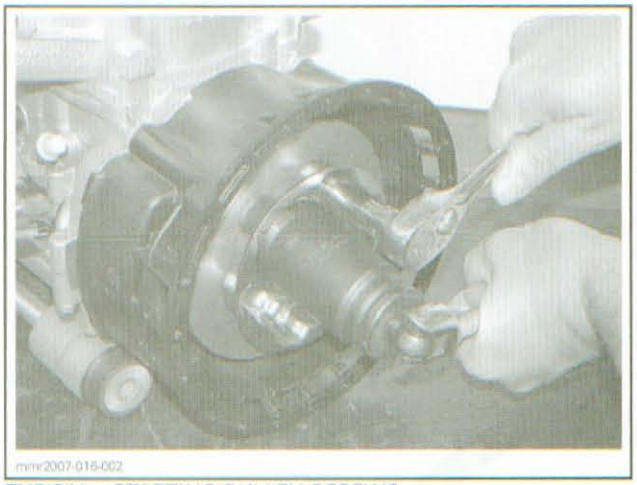

TYPICAL - STARTING PULLEY SCREWS

5. Remove the connecting flange retaining the rewind starter to the engine housing (except 800R models).

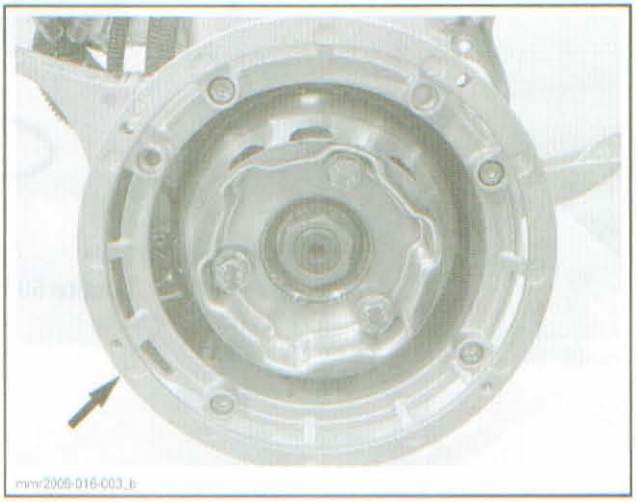

TYPICAL - REWIND STARTER CONNECTING FLANGE

6. Install the PULLER RING (P/N 420 876 081) on magneto flywheel (or counterweight on 800R engine).

www.midwestmanuals.com

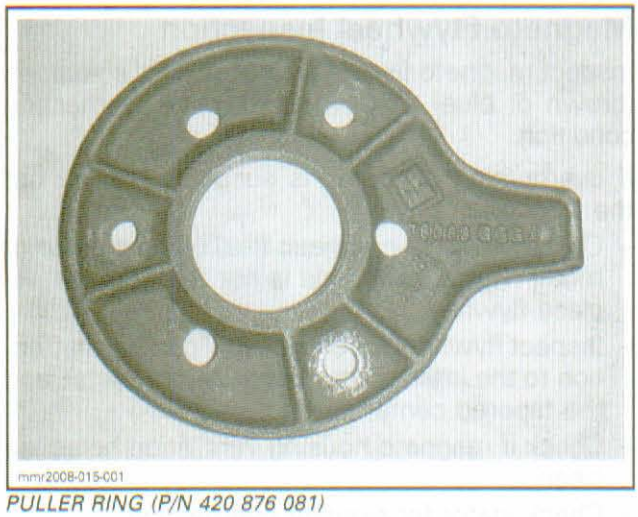

PULLER RING (P/N 420 876 081)

NOTICE Use only the following screw lengths to fasten puller ring to magneto flywheel. If other screw lengths are used, the stator behind the magneto flywheel may be damaged.

ENGINE	SCREW LENGTH
500SS/600/800R	M8 x 20 mm
600 HO E-TEC	M8 x 25 mm

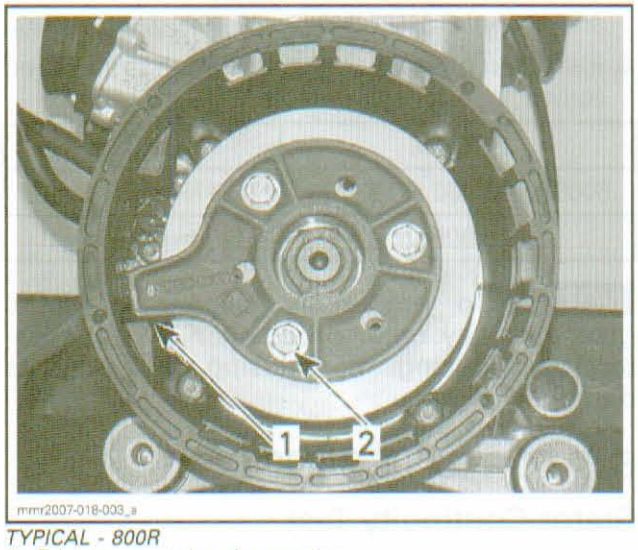

TYPICAL - 800R
1. *Tab in magneto housing opening*
2. *M8 screws of appropriate length*

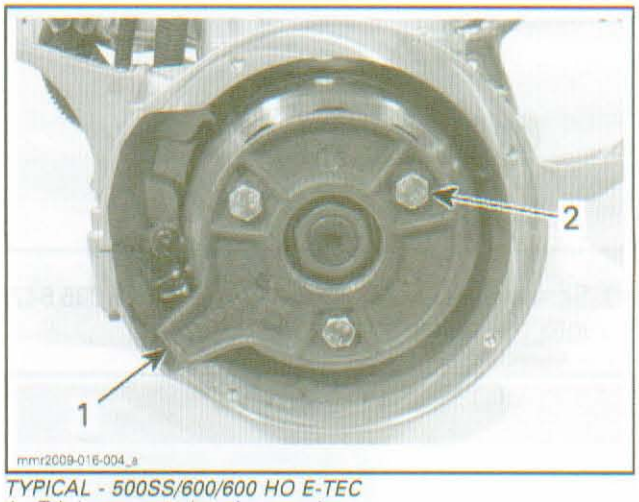

TYPICAL - 500SS/600/600 HO E-TEC
1. *Tab in magneto housing opening*
2. *M8 screws of appropriate length*

7. Remove magneto flywheel retaining nut, using a 30 mm socket with the outside diameter machined to 40 mm (1.580 in) by 16 mm (5/8 in) long.
8. To correctly remove a threadlocked fastener, first tap on the fastener to break threadlocker bond. This will prevent the thread from breaking.

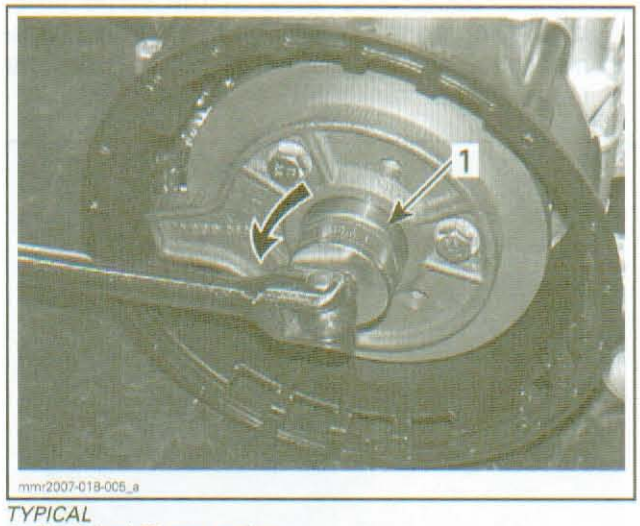

TYPICAL
1. *Machined 30 mm socket*

9. Install the CRANKSHAFT PROTECTOR (P/N 420 876 557) on crankshaft end.

NOTE: Applying a small amount of grease to the end of the crankshaft will hold the protector in place and allow you to easily install the magneto puller.

www.midwestmanuals.com



10. Screw the MAGNETO PULLER (P/N 529 035 547) into the puller ring.



MAGNETO PULLER (P/N 529 035 547)

11. Tighten puller bolt, while at the same time, tapping on on the puller bolt head with a hammer to release the magneto flywheel from the taper on the crankshaft.

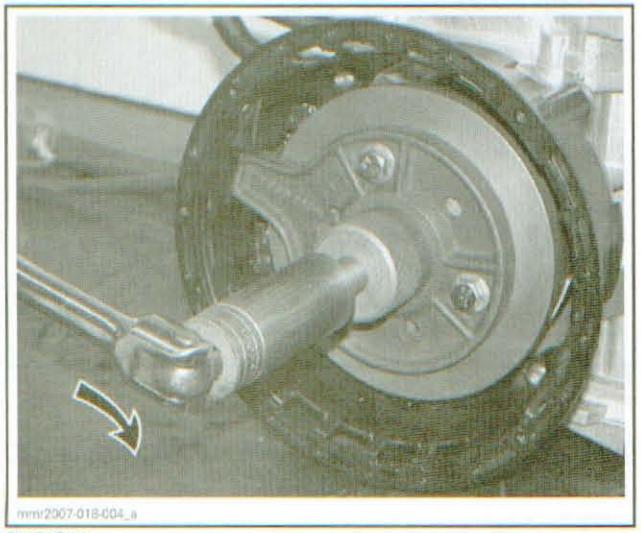

TYPICAL

Magneto Flywheel Cleaning

NOTICE Clean magneto flywheel using only a clean cloth.

Magneto Flywheel Inspection

Inspect magneto flywheel for abnormal coloration (brown or blue) that would indicate overheating condition.

If overheating condition is suspected, carry out the following:

- Check flywheel magnetic field using a piece of metal. If magnetic field is not felt or weak, replace flywheel.
- Inspect flywheel for cracks, pay particular attention to the inside circumference (magnets), and the tapered center portion.
- Check if magneto housing ventilation holes are clean.
- Check stator for signs of overheating.
- Test stator, see procedures further in this section.

Magneto Flywheel Installation

1. Clean crankshaft extension (taper) and apply LOCTITE 243 (P/N 293 800 060) on tapered surface.
2. Position Woodruff key, magneto flywheel and lock washer on crankshaft.
3. Clean the threads in the magneto flywheel nut and apply LOCTITE 243 (BLUE) (P/N 293 800 060).
4. Install nut on crankshaft and tighten to specified torque, see following table.

ENGINE	TORQUE
500SS/600/600 HO E-TEC	125 N•m (92 lbf•ft)
800R	95 N•m (70 lbf•ft)

NOTICE Do not apply silicone dielectric grease or any other product on Deutsch waterproof housings as housing seal may be damaged.

STATOR (500SS/600/800R)

Stator Continuity Test

1. Remove RH side panel.
2. Remove muffler.
3. Remove acoustic panel.
4. Disconnect connector from voltage regulator.

www.midwestmanuals.com

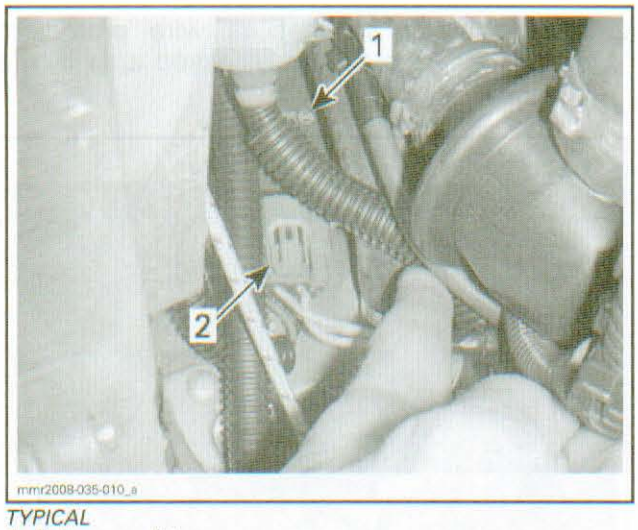

TYPICAL
1. *Voltage regulator*
2. *Regulator connector*

5. Set multimeter to Ω.
6. Read the resistance between wires as follows.

STATOR CONTINUITY TEST		
TEST PROBES		RESISTANCE @ 20°C (69°F)
Any YELLOW wire	To another YELLOW wire	0 - 0.5 Ω

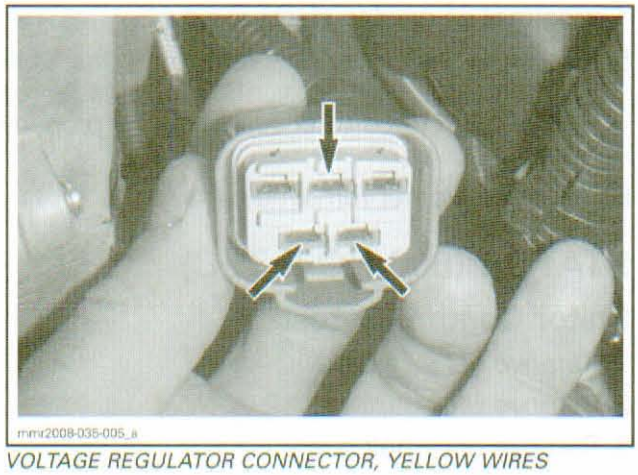

VOLTAGE REGULATOR CONNECTOR, YELLOW WIRES

7. Repeat test for every pair of YELLOW wires.
8. If resistance is out of specification, replace stator.
9. Install the connector and other parts in the reverse order of removal. Refer to appropriate sections for details.

Stator Insulation Test

1. Refer to the applicable *STATOR CONTINUITY TEST* for instructions on how to access stator connector on voltage regulator.
2. Set multimeter to Ω.
3. Read resistance as follows.

STATOR INSULATION TEST		
TEST PROBES		RESISTANCE @ 20°C (69°F)
Any YELLOW wire	Engine ground	OL (open circuit)

If results are out of specification, the stator and/or the wiring need to be repaired/replaced.

Stator AC Voltage Output Test

1. Remove RH side panel.
2. Remove muffler.
3. Remove acoustic panel.
4. Disconnect the voltage regulator connector.

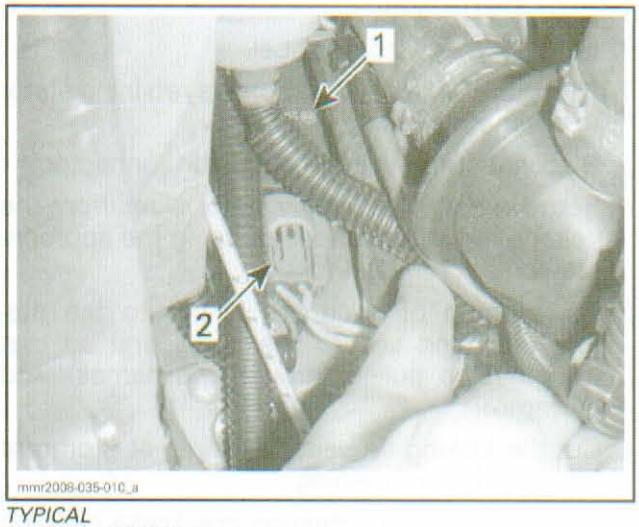

TYPICAL
1. *Voltage regulator*
2. *Regulator connector*

5. Set multimeter to Vac scale.
6. Manually crank engine and read the voltage as follows. Repeat the test 3 times for each pair of YELLOW wires.

STATOR AC VOLTAGE OUTPUT TEST		
TEST PROBES		VOLTAGE
Any YELLOW wire	Any other YELLOW wire	3.5 - 7.5 Vac

www.midwestmanuals.com

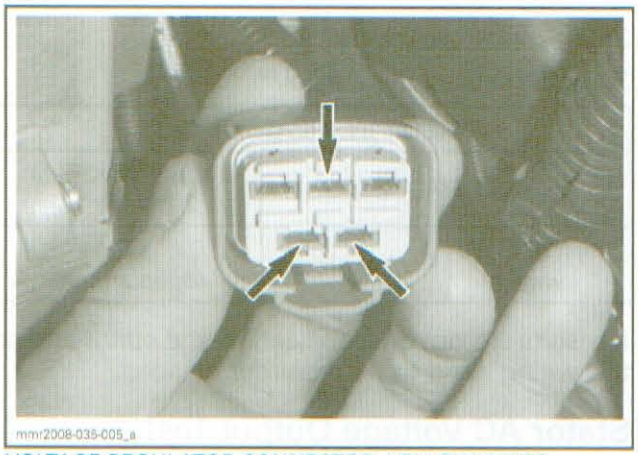

VOLTAGE REGULATOR CONNECTOR, YELLOW WIRES

If voltage is lower than specification, replace stator.

Install all removed parts.

Stator Removal

1. Remove magneto flywheel.
2. Remove all Allen socket screws retaining stator to magneto housing.
3. Disconnect the voltage regulator connector.
4. Remove the three yellow stator wires from the voltage regulator connector using the appropriate contact removal tool.
5. Tie a string of adequate length to the stator wires and secure the loose end so that it cannot be pulled through the harness and grommet.
6. Cut the locking tie securing wires at grommet near crankcase opening.
7. Carefully pull wires through crankcase opening as you remove the stator.
8. Untie the string from the stator wires, it will be used to pull the wires back through the grommet on installation.

Stator Cleaning

NOTICE **Clean stator using only a clean cloth.**

Stator Installation

1. Insert the stator wires through the crankcase grommet and pull them up to the voltage regulator connector.

NOTE: Use the string and a piece of tape to secure the ends of the wires to ease pulling them through the crankcase, grommet and flexible conduit.

2. Position stator so that its wire protectors are positioned over the recessed area in the crankcase.

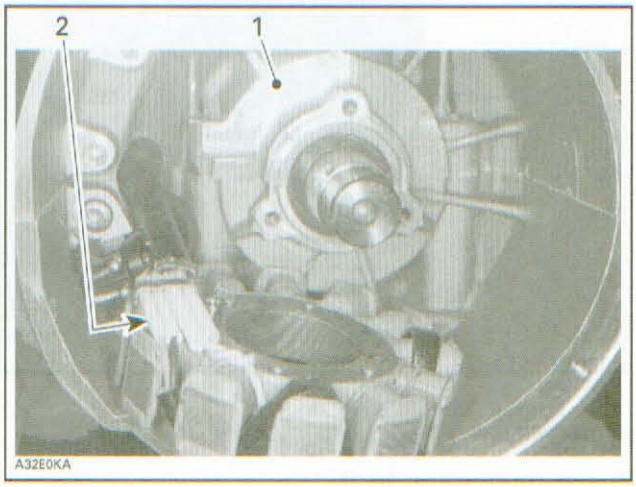

1. Crankcase recessed area
2. Wire protectors

NOTE: During installation, ensure the stator harness is located on the left side.

3. Apply LOCTITE 243 (BLUE) (P/N 293 800 060) on threads of stator screws then torque them to 9 N•m (80 lbf•**in**).
4. Install a new locking tie near the crankcase grommet as prior to stator removal.
5. Insert the yellow stator wires into the voltage regulator connector. Pull on the wires with enough force to ensure they are properly locked in.
6. Reinstall all other removed parts.

STATOR (600 HO E-TEC)

Stator Continuity Test

1. Remove LH side panel.
2. Remove tool kit.
3. Remove drive belt guard.
4. Disconnect magneto stator connector.

www.midwestmanuals.com

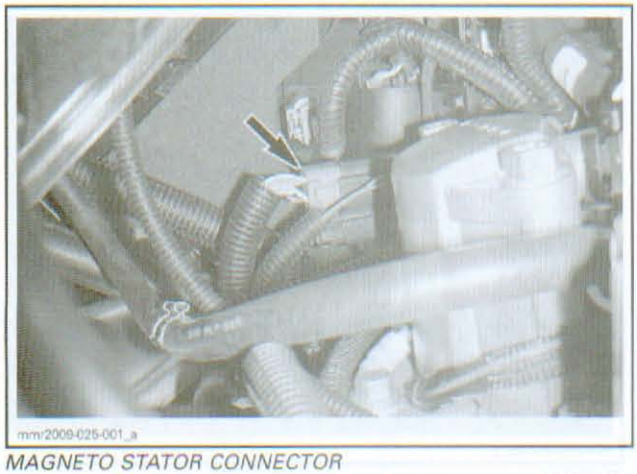

MAGNETO STATOR CONNECTOR

5. Set multimeter to Ω.
6. Measure the resistance of each stator coil at stator connector as follows.

STATOR CONTINUITY TEST		
TEST PROBES		RESISTANCE @ 20°C (69°F)
Pin 1	Pin 6	0.63 ± 0.03 Ω
Pin 2	Pin 5	
Pin 3	Pin 4	

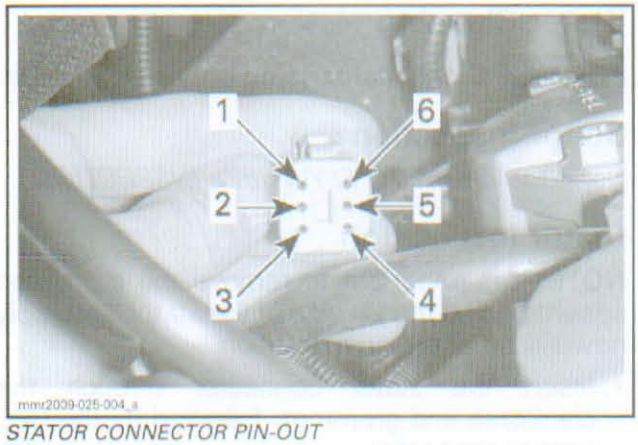

STATOR CONNECTOR PIN-OUT

NOTE: The stator resistance values mentioned in the table are manufacturers specifications under ideal conditions. If stator coil resistance is less than 1 Ω, consider stator to be in good working condition.

If resistance is out of specification, replace stator.

7. Install stator connector and other parts in the reverse order of removal.

Stator Insulation Test

Refer to the *STATOR CONTINUITY TEST* for instructions on how to access and disconnect stator connector.

1. Set multimeter to Ω.
2. Read resistance at stator connector as follows.

STATOR INSULATION TEST		
TEST PROBES		RESISTANCE @ 20°C (69°F)
Pin 1	Engine ground	OL (open circuit)
Pin 2		
Pin 3		
Pin 1	Pin 4	
Pin 1	Pin 5	
Pin 2	Pin 4	

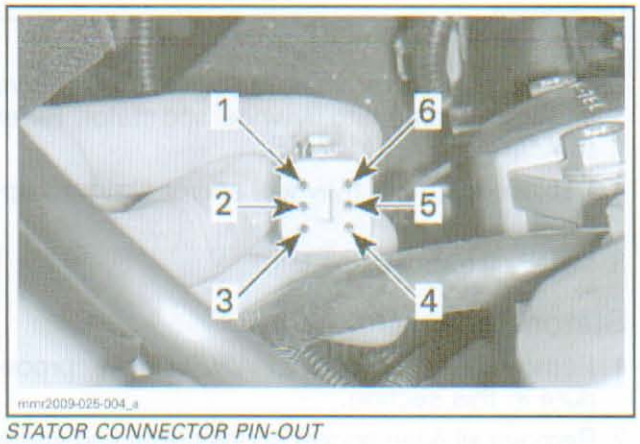

STATOR CONNECTOR PIN-OUT

If results are out of specification, the stator and/or the wiring need to be repaired/replaced.

Stator Voltage Output Test

Refer to the *STATOR CONTINUITY TEST* for instructions on how to access and disconnect stator connector.

1. Set multimeter to Vac and **manually set a scale** capable of reading at least 20 Vac.
2. Manually crank engine and read the voltage from each winding as follows. Repeat the test 3 times for each winding.

www.midwestmanuals.com

STATOR OUTPUT VOLTAGE TEST		
TEST PROBES		VOLTAGE
Pin 1	Pin 6	Approximately 15 - 20 Vac
Pin 2	Pin 5	
Pin 3	Pin 4	

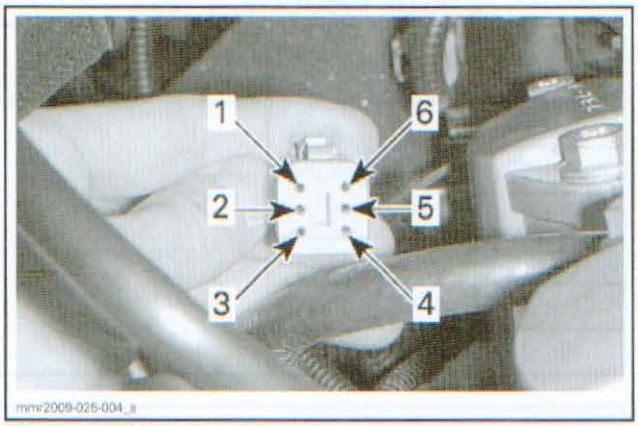

STATOR CONNECTOR PIN-OUT

3. If voltage is lower than specification, remove and inspect magneto flywheel and stator. Refer to *MAGNETO FLYWHEEL*.
4. Replace magneto flywheel and/or stator as applicable.
5. Install all removed parts.

Stator Removal

1. Remove *MAGNETO FLYWHEEL*, see procedure in this section.
2. Remove all Allen socket screws retaining stator to magneto housing.
3. Remove grommet from crankcase where CPS sensor and stator wires exit magneto housing.
4. Disconnect the crankshaft position sensor (CPS) connector, see procedure in this section.
5. Disconnect the stator connector located on the capacitor support, see illustration.

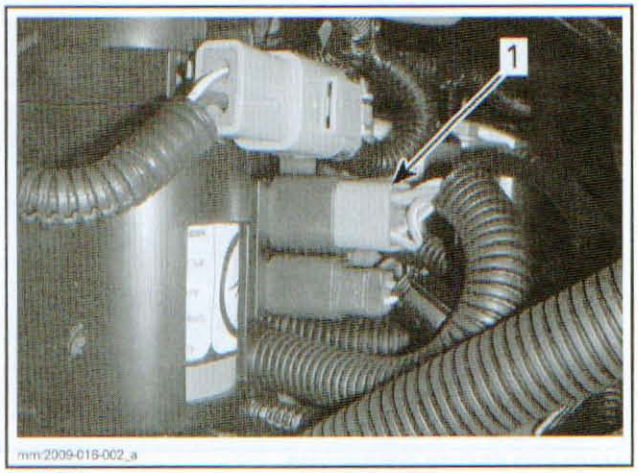

TYPICAL
1. Stator connector

NOTE: To ease harness routing at installation, tie a string on each connector and let the strings follow through as you pull on the harnesses. Pass the CPS sensor connector through the grommet first.

6. Remove the stator and carefully pull the wires through the grommet.

NOTE: It will be necessary to break the silicone sealant behind the left side of the stator. Proceed carefully to avoid wire damage.

Stator Cleaning

NOTICE **Clean stator using only a clean cloth.**

Stator Inspection

Refer to *MAGNETO FLYWHEEL INSPECTION*.

Stator Installation

NOTE: It is important to remove the old silicon sealant behind the LH side of the stator, and apply new silicon at stator installation.

1. Insert the stator connector through the crankcase and grommet, followed by the CPS sensor connector.
2. Install the grommet on crankcase.

NOTE: During installation, ensure the stator harness is located on the left side.

Apply LOCTITE 243 (BLUE) (P/N 293 800 060) on threads of stator screws then torque them to 9 N•m (80 lbf•**in**).

3. Tie the strings on the connectors used during removal of the stator and CPS sensor connectors, then pull on them to route the harnesses up to their original locations.
4. Reinstall all other removed parts.

www.midwestmanuals.com

CRANKSHAFT POSITION SENSOR (600 HO E-TEC)

CPS Sensor Test

Refer to *E-TEC DIRECT INJECTION* section.

CPS Sensor Removal

⚠ CAUTION Ensure tether cord is removed from DESS post and engine shut-off switch is in the OFF position.

1. Remove magneto flywheel, refer to *MAGNETO FLYWHEEL REMOVAL* in this section.
2. Remove CPS sensor retaining screws.
3. Remove grommet from crankcase where CPS sensor harness exits magneto housing.
4. Disconnect CPS sensor connector located on the capacitor support, see illustration.



1. *CPS sensor connector*

NOTE: To ease harness routing at installation, tie a string to the CPS sensor connector and guide it through as you pull on the CPS sensor harness.

5. Remove CPS sensor and carefully pull harness through from crankcase.

CPS sensor Installation

1. Tie the rope used during removal on the CPS sensor connector, then pull on it to route the harness to its original location.
2. Complete the installation in the reverse order of the removal procedure.

NOTE: It is important to remove the old silicon at CPS sensor location then apply new silicon. Screw CPS sensor then stick the CPS sensor harness in silicon.

TRIGGER COILS (500SS/600)

Trigger Coil Inspection

For trigger coil testing, refer to the *IGNITION SYSTEM* section.

Trigger Coil Removal

⚠ CAUTION Ensure tether cord is removed from DESS post and engine shut-off switch is in the OFF position.

1. Remove magneto flywheel, refer to *MAGNETO FLYWHEEL REMOVAL* in this section.

NOTE: The trigger coil connector is located behind the oil filter (below oil reservoir).

2. Remove grommet from crankcase where trigger coil wire(s) exit(s) magneto housing.
3. Remove trigger coil(s) retaining screws.
4. Remove trigger coil(s) and carefully pull wires through crankcase.

Trigger Coil Installation

For installation, reverse the removal procedure.

NOTE: It is important to remove the old silicon at trigger coil location then apply new silicon. Screw trigger coil then stick the trigger coil wires in the silicon.

TRIGGER COILS (800R)

Trigger Coil Inspection

For trigger coil testing, refer to the *IGNITION SYSTEM* section.

Trigger Coil Removal

Remove the magneto housing. See procedure in this section.

Separate trigger coils from silicone sealer on magneto housing.

www.midwestmanuals.com

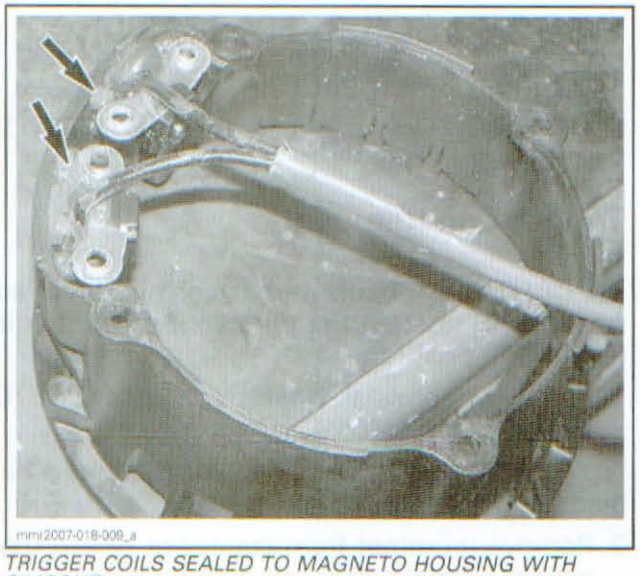

TRIGGER COILS SEALED TO MAGNETO HOUSING WITH SILICONE

Trigger Coil Installation

Apply new silicone sealer LOCTITE 5910 (P/N 293 800 081) between trigger coils and magneto housing as prior to removal. Then, stick the trigger coil wires in the silicone.

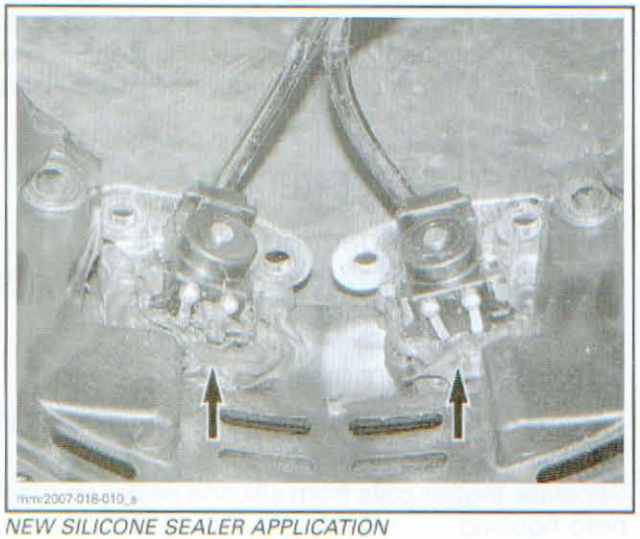

NEW SILICONE SEALER APPLICATION

Install the magneto housing.

MAGNETO HOUSING (800R)

Magneto Housing Inspection

Inspect housing for cracks or other apparent damage. Replace as necessary.

Magneto Housing Removal

⚠ CAUTION Ensure tether cord is removed from DESS post and engine shut-off switch is in the OFF position.

1. Remove magneto flywheel, refer to *MAGNETO FLYWHEEL REMOVAL* in this section.
2. Remove magneto housing retaining screws.



MAGNETO HOUSING RETAINING SCREWS

3. Remove trigger coil retaining screws.

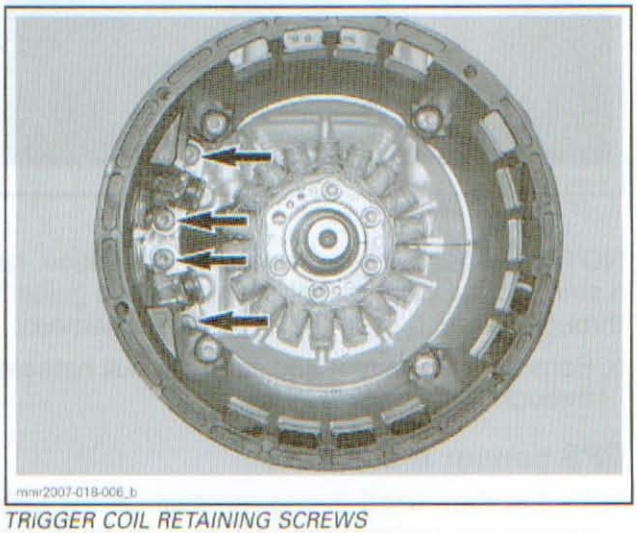

TRIGGER COIL RETAINING SCREWS

4. Remove magneto harness grommet from crankcase.

www.midwestmanuals.com

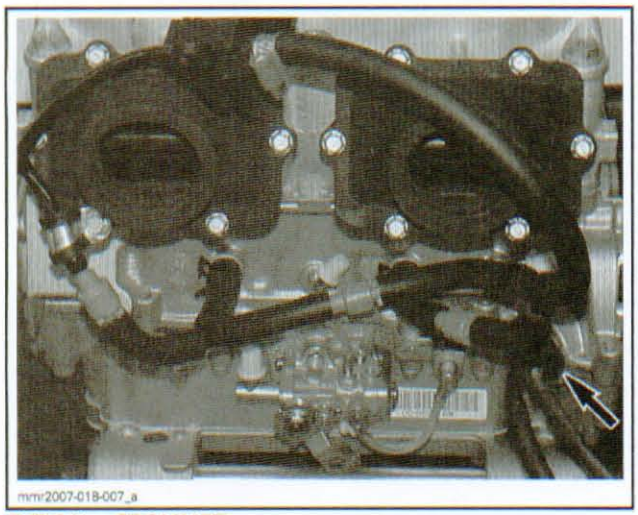

TYPICAL - GROMMET

5. Slightly pull magneto housing and cut silicone sealer from between trigger coils and crankcase.

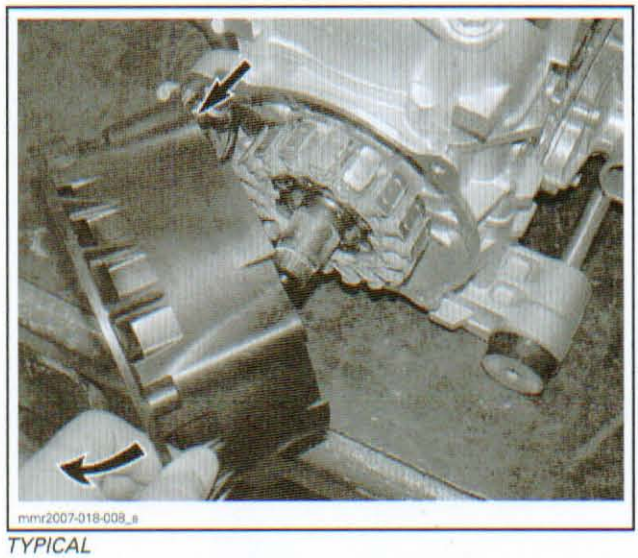

TYPICAL

6. Remove magneto housing with trigger coils.

Magneto Housing Installation

For installation, reverse the removal procedure. However, pay attention to the following.

Reinstall magneto housing and trigger coils on crankcase.

Torque trigger coil screws as specified in exploded view.

Torque magneto housing screws to 9 N•m (80 lbf•**in**).

www.midwestmanuals.com

www.midwestmanuals.com

RAVE (593)

SERVICE PRODUCTS

Description	Part Number	Page
DREI BOND SEALING COMPOUND	420 297 906	111
LOCTITE CHISEL	413 708 500	111

www.midwestmanuals.com

500SS/600

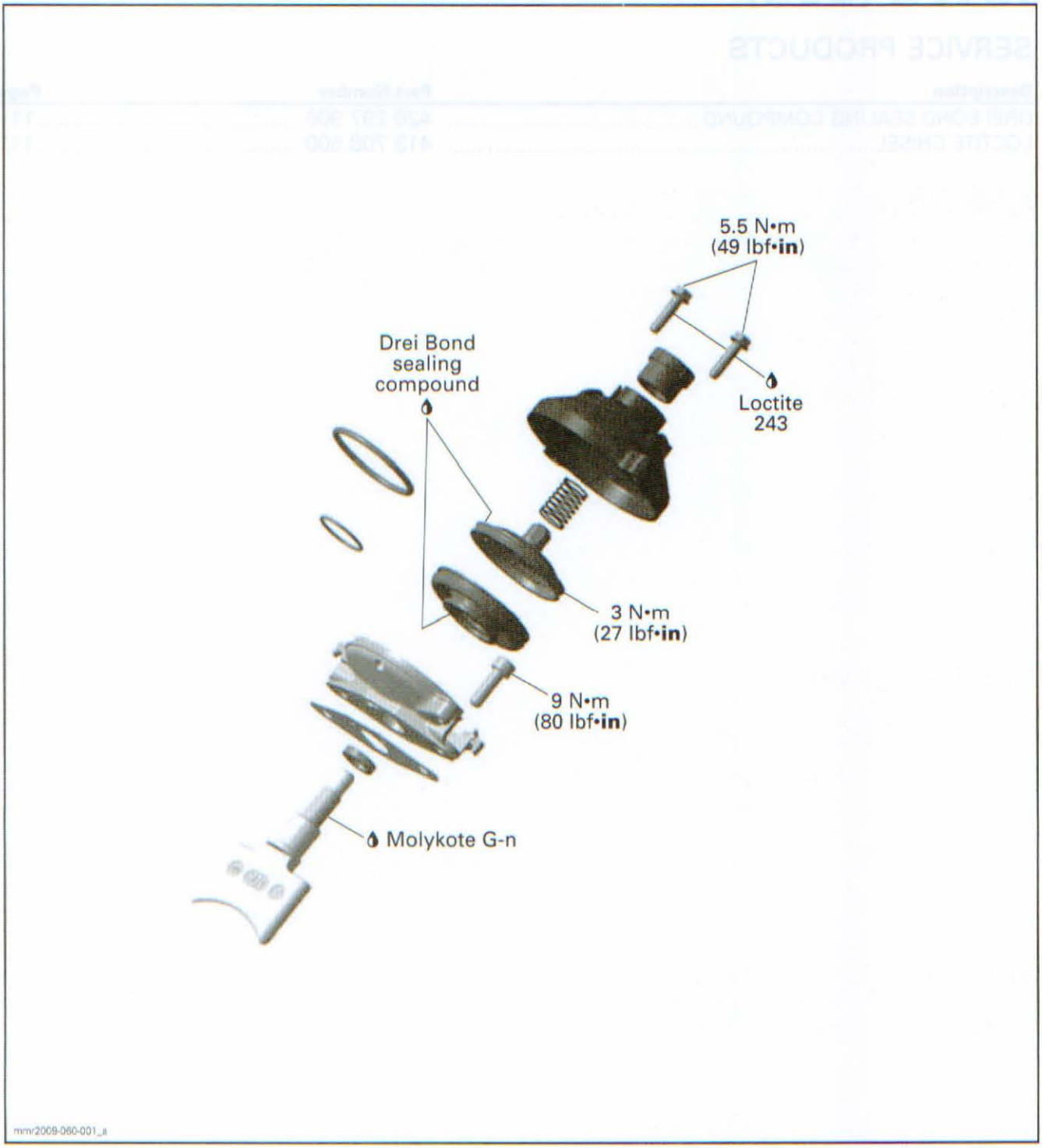

www.midwestmanuals.com

GENERAL

During assembly/installation, use torque values and service products as in the exploded view.

Clean threads before applying a threadlocker. Refer to *SELF-LOCKING FASTENERS* and *LOCTITE APPLICATION* at the beginning of this manual for complete procedure.

⚠ WARNING

Torque wrench tightening specifications must be strictly adhered to.
Locking devices (e.g.: locking tabs, elastic stop nuts, self-locking fasteners, cotter pins, etc.) must be replaced with new ones.

SYSTEM DESCRIPTION

NOTE: RAVE stands for Rotax Adjustable Variable Exhaust.

The RAVE valves change the height of the exhaust port to enhance the engine powerband and torque according to the engine RPM and throttle position.

Exhaust pressure is used to inflate the bellows and open the RAVE valves at the proper engine RPM.

PROCEDURES

RAVE VALVES

Rave Valves Removal and Disassembly

1. Remove LH side cover.
2. Remove tool kit support located on drive pulley guard.
3. Remove RAVE valve cover by removing screws.

⚠ CAUTION **Firmly hold cover to valve base. The compression spring inside the valve applies pressure against the cover.**

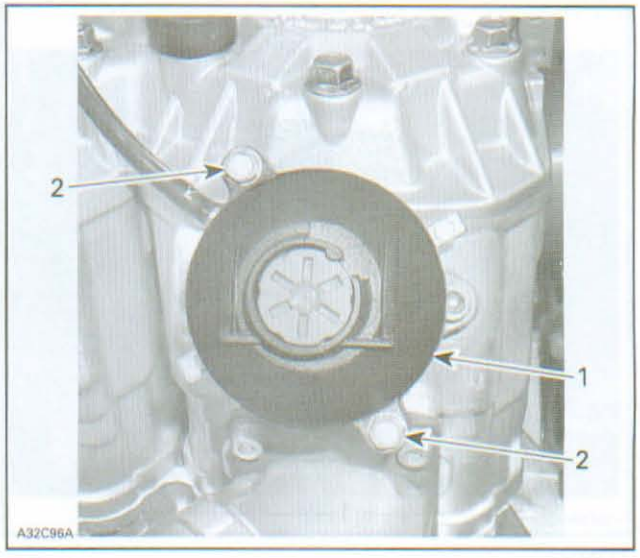

TYPICAL
1. Cover
2. Retaining screws

4. Remove the compression spring.

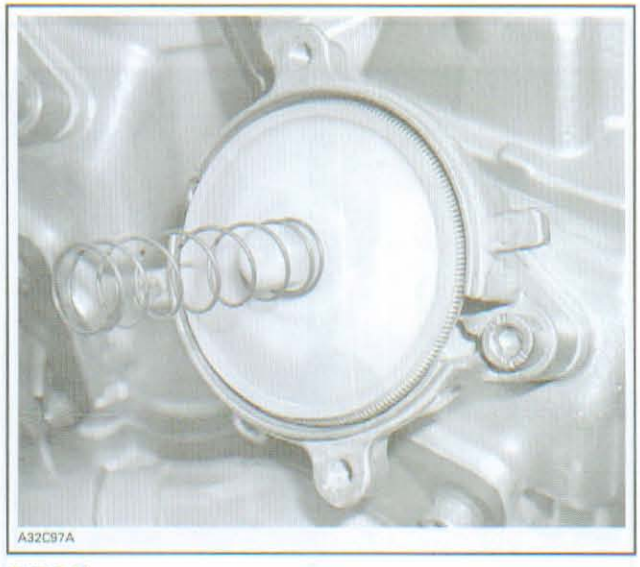

TYPICAL

5. Unscrew the Allen socket screw then remove the RAVE valve base.

www.midwestmanuals.com

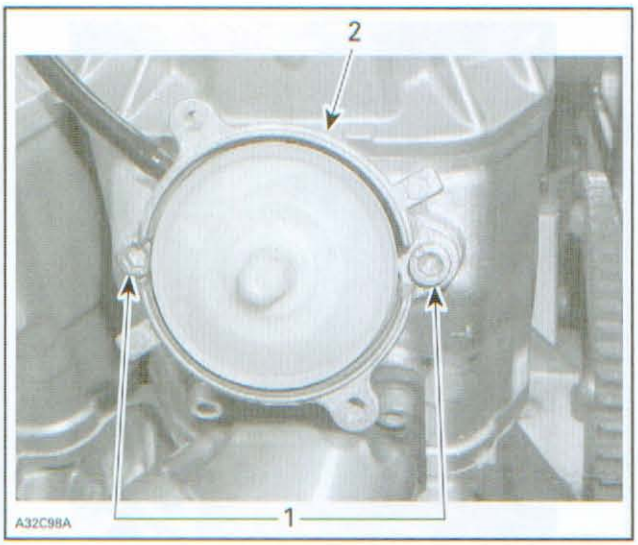

TYPICAL
1. *Allen socket screws*
2. *RAVE valve base*

6. Unscrew and remove the guillotine from the valve piston than remove the gasket.

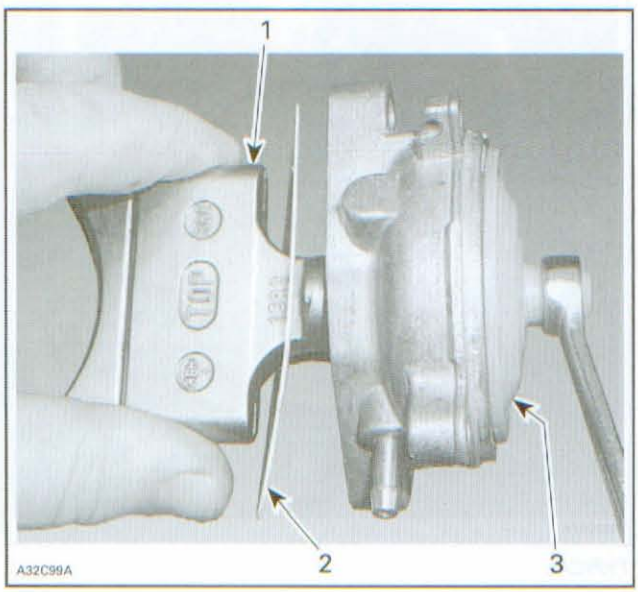

TYPICAL
1. *Guillotine*
2. *Gasket*
3. *Valve piston*

7. Remove spring retaining bellows to valve piston.

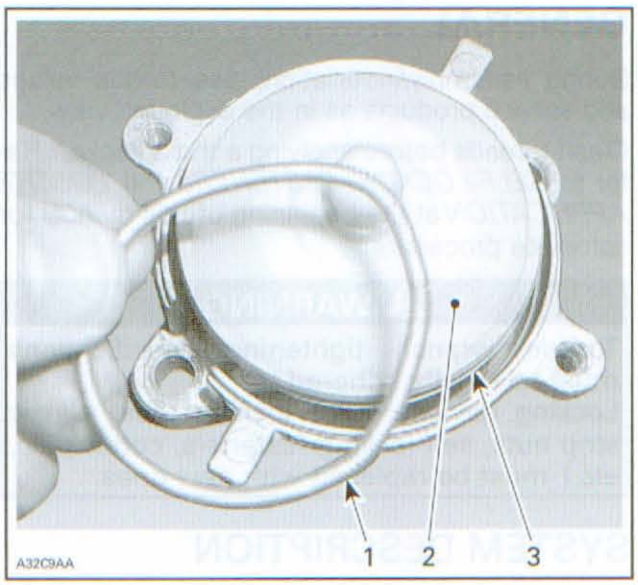

TYPICAL
1. *Spring*
2. *Valve piston*
3. *Bellows*

8. Remove valve piston.

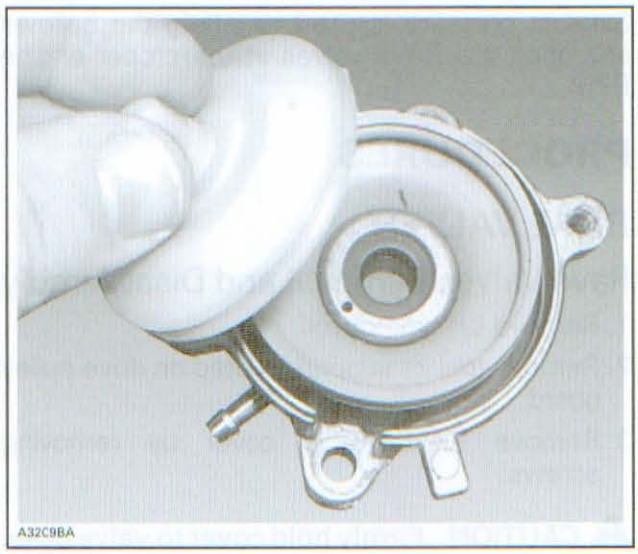

TYPICAL

9. Remove the small spring retaining bellows to valve base.

www.midwestmanuals.com

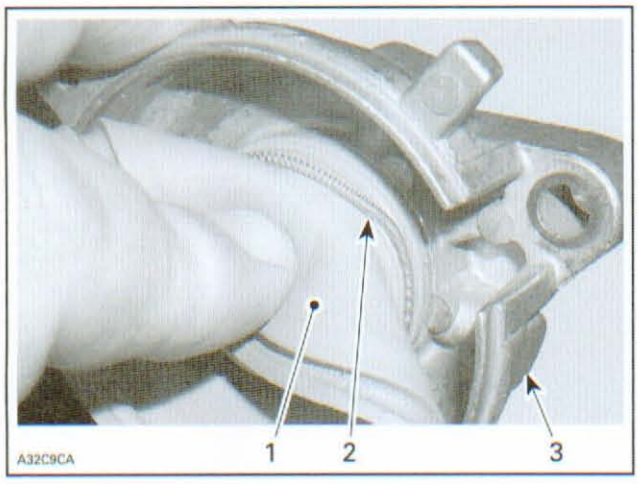

TYPICAL
1. *Bellows*
2. *Small spring*
3. *Valve base*

10. Remove bellows from valve base.

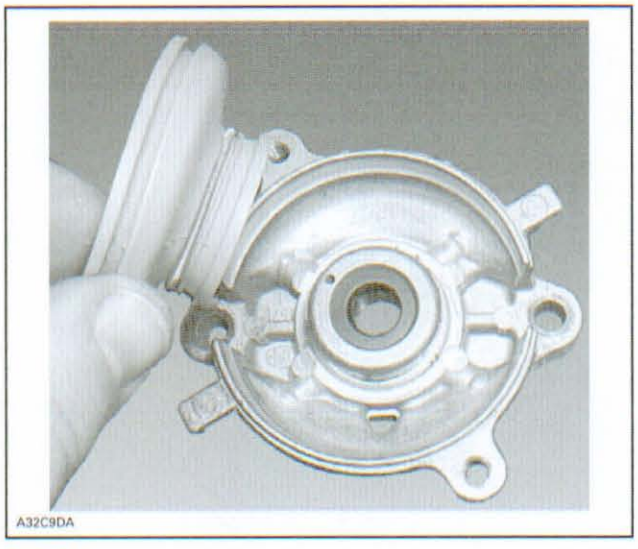

TYPICAL

Rave Valves Cleaning

Discard all gaskets and O-rings. Use LOCTITE CHISEL (P/N 413 708 500) to clean mating surfaces.

Clean all metal components in a non-ferrous metal cleaner.

Rave Valves Inspection

NOTE: If there is oil in the valve base, replace seal.

There are no wear parts anywhere in the system and there are no adjustments to be periodically checked. The only possible maintenance required would be cleaning of carbon deposits from the guillotine slide. Cleaning intervals would depend upon the user's riding style and the quality of the oil used.

BRP suggests annual cleaning of the valve. If a customer uses lower quality oil, than recommended, more frequent cleaning may be required.

No special solvents or cleaners are required when cleaning the valve.

Check valve rod housing and cylinder for clogged passages.

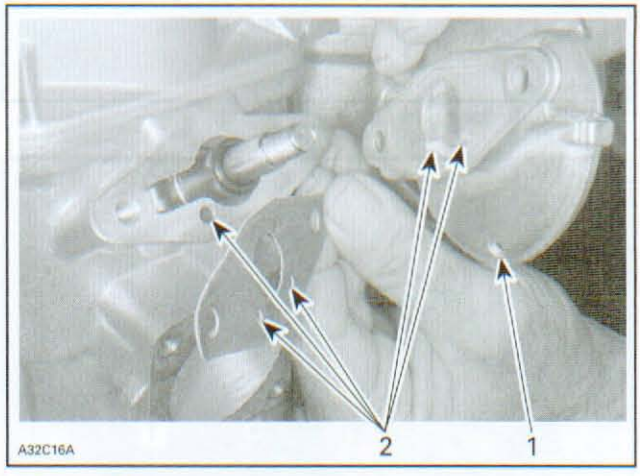

1. *Draining hole*
2. *Passages*

NOTE: Oil dripping from draining hole indicates a loosen spring or damaged bellows.

Check for cracked, dried or perforated bellows.

In its stock configuration, the RAVE valve guillotine has a minimum of 0.5 mm (.020 in) clearance to the cylinder bore measured at the center line of the cylinder. This is the minimum production clearance.

Rave Valves Assembly and Installation

Assembly and intallation are the reverse of the removal, however, pay attention to the following.

Apply DREI BOND SEALING COMPOUND (P/N 420 297 906) on the bellow lower rib and in the valve piston groove.

www.midwestmanuals.com



1. Apply Drei Bond here



1. Apply Drei Bond here

Install RAVE valve with its mention TOP as illustrated in the following photo.

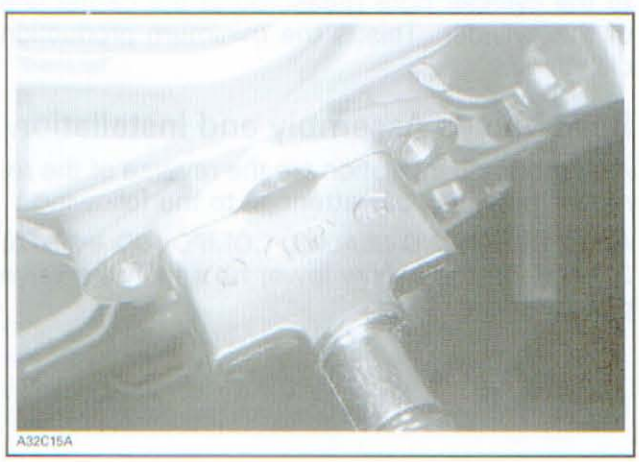

www.midwestmanuals.com

RAVE (593 E-TEC)

SERVICE TOOLS

Description	Part Number	Page
T-HARNESS	529 035 869	124
VACUUM/PRESSURE PUMP	529 021 800	117

SERVICE PRODUCTS

Description	Part Number	Page
DREI BOND SEALING COMPOUND	420 297 906	120–121
LOCTITE 243	293 800 060	122, 127
MOLYKOTE G-N	420 297 433	120

www.midwestmanuals.com

600 HO E-TEC

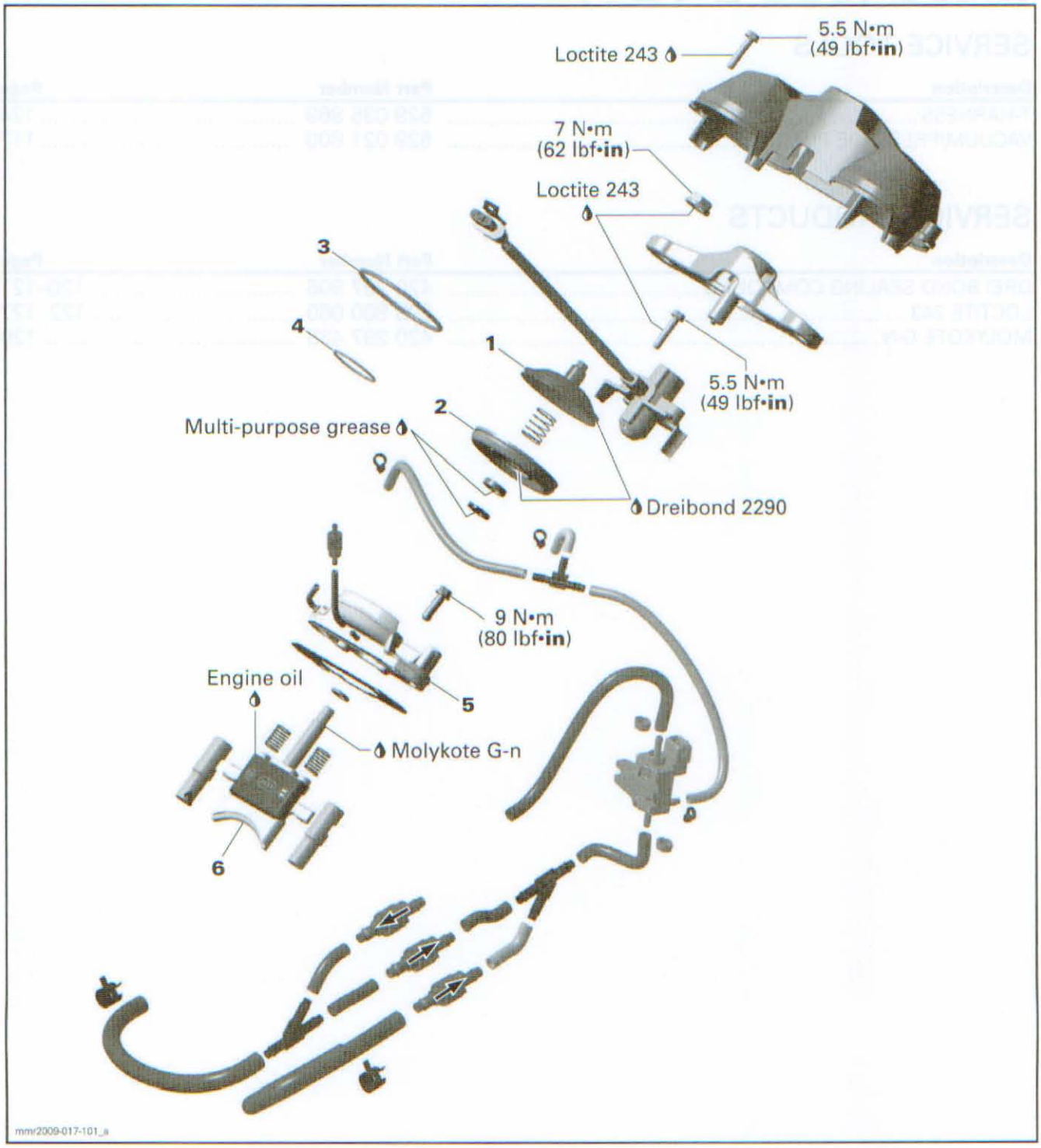

www.midwestmanuals.com

GENERAL

During assembly/installation, use torque values and service products as in the exploded view.

Clean threads before applying a threadlocker. Refer to *SELF-LOCKING FASTENERS PROCEDURE* and *LOCTITE APPLICATION PROCEDURE* at the beginning of this manual for complete procedure.

⚠ WARNING

Torque wrench tightening specifications must be strictly adhered to.
Locking devices (e.g.: locking tabs, elastic stop nuts, self-locking fasteners, cotter pins, etc.) must be replaced with new ones.

SYSTEM DESCRIPTION

The E-TEC basically uses the same mechanisms as on the 800R engine except for the following:

- RAVE valves are lubricated by the electronic oil injection pump.
- RAVE valve position feedback to ECM. A hall-effect position sensor is used (RPS; RAVE position sensor).
- Only one solenoid is used to activate the RAVE valves.
- RAVE valves movement is synchronized and monitored with a link bar.

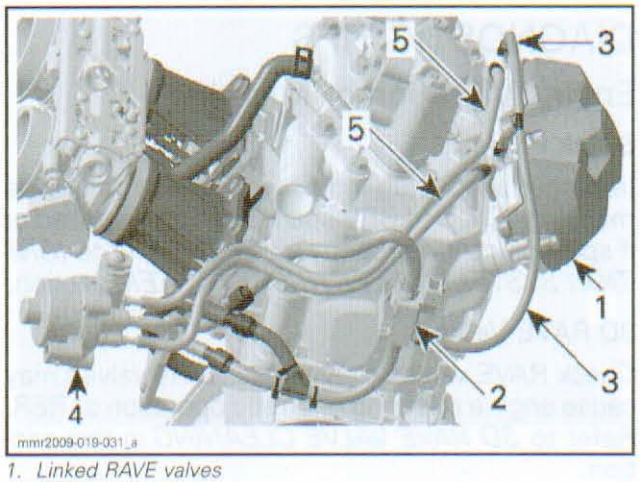

1. *Linked RAVE valves*
2. *RAVE solenoid*
3. *Pressure hoses to RAVE valves*
4. *Electronic oil injection pump*
5. *Oil lines to RAVE valves*

A link bar is used to keep RAVE valves opening and closing synchronized one with each other. This provides a more consistent engine operation.

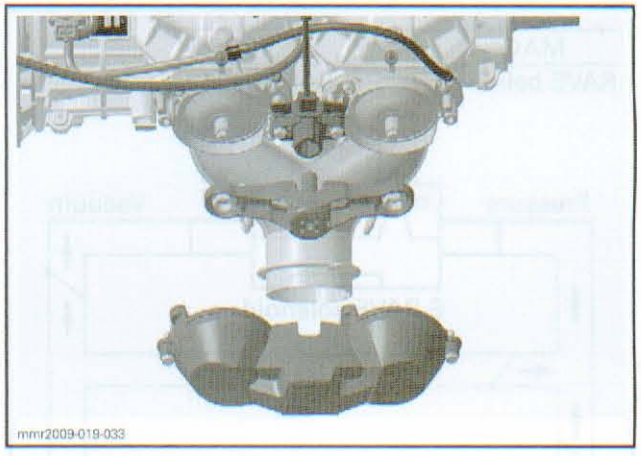

If link bar is removed, a particular adjustment is required at the assembly. Also, B.U.D.S. needs to be used to set the RAVE mid-position.

The RAVE position sensor (RPS) provides the ECM its actual position. Either closed, mid-position or open. This informs the ECM that the RAVE valves are really at the expected position so that the proper amount of fuel is injected as well as other required operating parameters are applied.

The 3D RAVE arrangement uses only one solenoid to move the RAVE valves to the desired position.

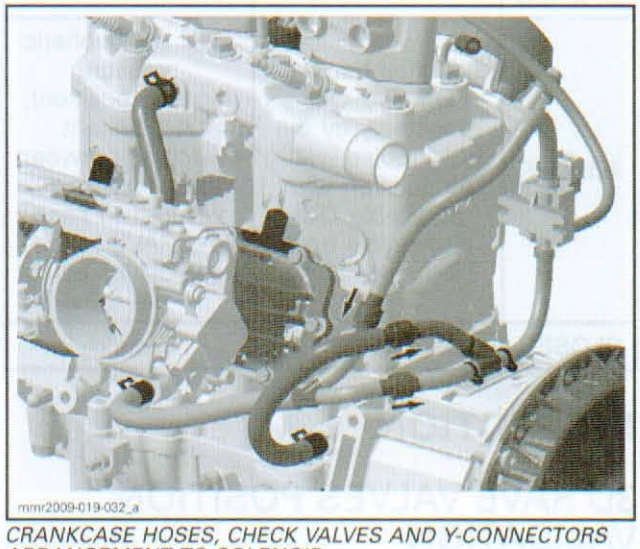

CRANKCASE HOSES, CHECK VALVES AND Y-CONNECTORS ARRANGEMENT TO SOLENOID

www.midwestmanuals.com

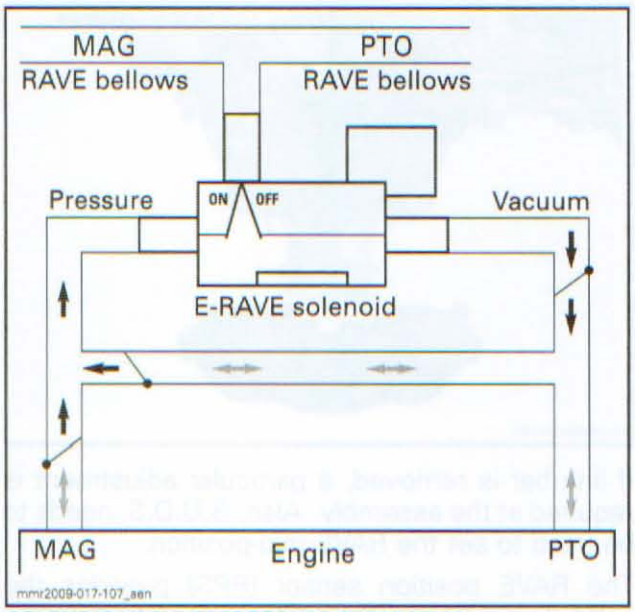

SOLENOID VACUUM/PRESSURE SEPARATION

The ECM controls the solenoid as follows.

RAVE VALVES POSITION	SOLENOID STATE	SOLENOID VALVE OPERATION
FULLY OPENED	ON	Pressure
MIDDLE	Switched between ON and OFF repeatedly by the ECM (pulse width modulation with a variable DC) (duty cycle from 10 to near 50%).	Near atmospheric pressure (floating position). A constant switching between pressure and vacuum to keep the RAVE in the mid position as set in the ECM.
CLOSED	OFF	Vacuum

INSPECTION

3D RAVE VALVES POSITION VALIDATION

1. Lift rear of vehicle to clear track from the ground. Support it with a wide base stand.
2. Connect B.U.D.S. Refer to *COMMUNICATION TOOLS AND B.U.D.S.* section.
3. In B.U.D.S., select the **Setting** tab, then the **ECM** tab. The actual 3D RAVE valves position is displayed in the **Rave Mid-Position** area.
4. Start engine.

⚠ WARNING

Make sure that the track is free of any particles which could be thrown out while track is rotating. Keep hands, tools, feet and clothing clear of track. Ensure no one is standing in close proximity to the vehicle.

5. Monitor the actual 3D RAVE valves position at different engine speeds. Refer to the following table.

3D RAVE VALVES POSITION REFERENCE TABLE	
ENGINE SPEED	VALVE POSITION
Idle or low RPM	0.5 to 0.7 (closed)
6600 to 7700	Approximately 2.5 (mid)
From 7700	4.5 to 4.7 (open)

If the 3D RAVE valves positions do not correspond with the reference table, verify the following in this order.

- Fault codes. Correct as required
- RAVE valves cleanliness
- RAVE valves leak test
- Actuator check valves operation
- Solenoid operation.

TROUBLESHOOTING

DIAGNOSTIC TIPS

Engine Vibration or Misfiring

Spark Plugs

Improper spark plug indexing may lead to engine misfiring. Check if BRP spark plugs are installed or if spark plugs are properly indexed. Refer to *IGNITION SYSTEM* in *ELECTRICAL SYSTEM* section.

3D RAVE Valves

Check RAVE valves cleanliness. Dirty valves may cause engine misfiring or erratic operation of RER. Refer to *3D RAVE VALVE CLEANING* in this section.

Check RAVE valve operation. Improper RAVE valves position may cause engine to vibrate or misfire. Refer to *3D RAVE VALVES POSITION VALIDATION*.

www.midwestmanuals.com

PROCEDURES

3D RAVE VALVES

3D RAVE Valve Leak Test

NOTE: Test each RAVE individually.

Use the VACUUM/PRESSURE PUMP (P/N 529 021 800).



1. Remove 3D RAVE valves cover and link bar, see *3D RAVE VALVES REMOVAL*.
2. Unplug the RAVE inlet hose.
3. Install test pump on nipple and apply pressure. Piston should fully rise. Otherwise or if it lowers rather quickly, check bellow and seals inside RAVE valve.

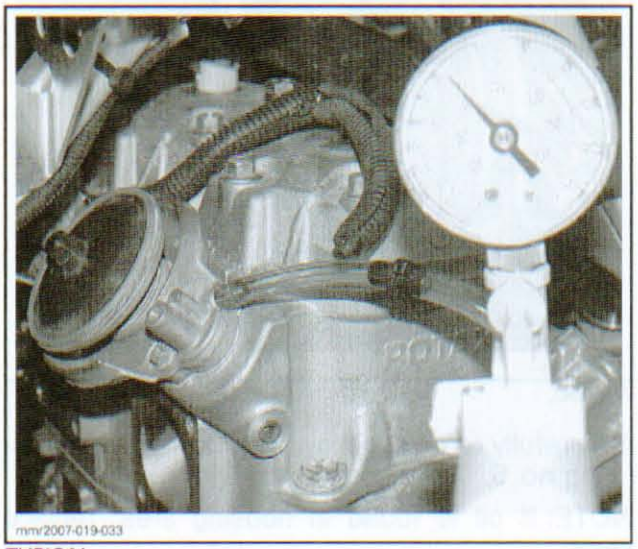

TYPICAL

4. Apply vacuum. Piston should fully lower. Otherwise or if it rises rather quickly, check bellow and seals inside RAVE valve.

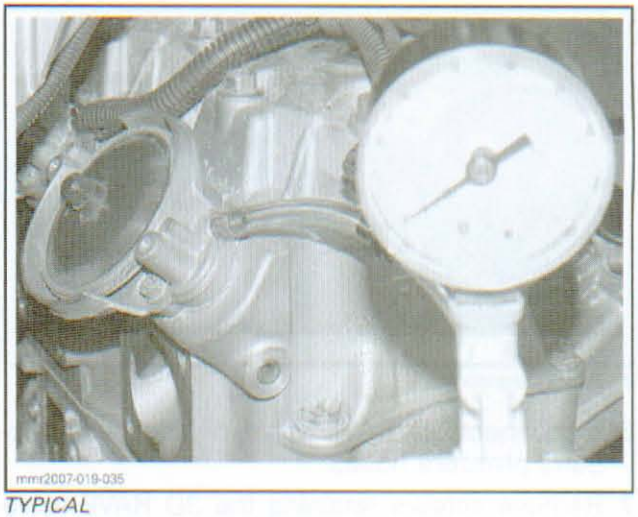

TYPICAL

For check valves and solenoid leak tests, refer to *3D SOLENOID AND CHECK VALVES* in this section.

5. Install link bar and cover.

NOTE: It is very important to perform *3D RAVE VALVES SYNCHRONIZATION* whenever link bar is removed. See procedure below.

3D RAVE Valves Removal

1. Remove LH side panel.
2. Remove tool kit support located on drive belt guard.
3. Remove 3D RAVE valves cover.
4. Remove 3D RAVE valves link bar. Hold RAVE pistons with a wrench and remove the retaining nuts.

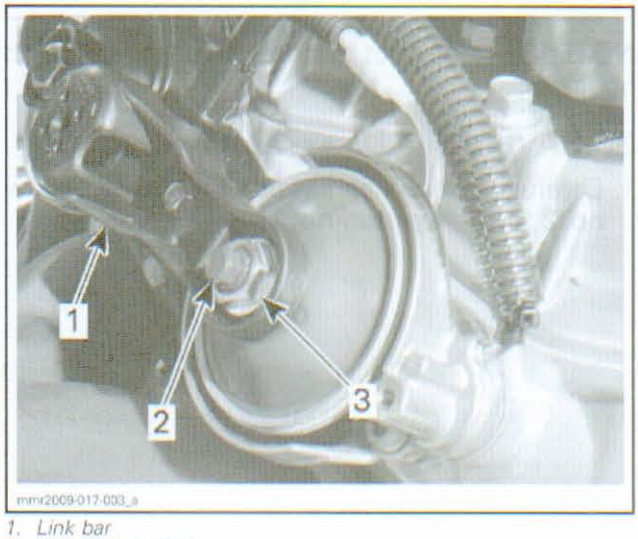

1. *Link bar*
2. *Hold piston here*
3. *Retaining nut*

5. Remove 3D RAVE valves position sensor.

www.midwestmanuals.com

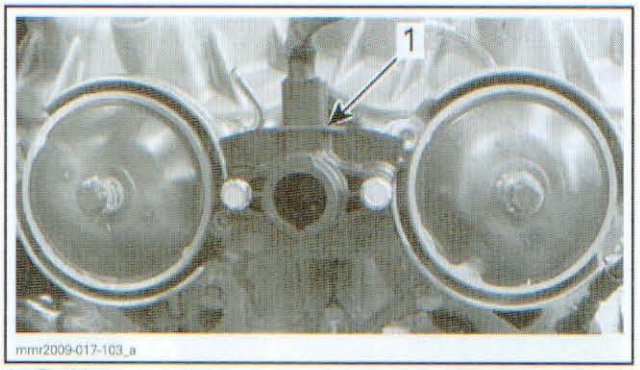

1. Position sensor

6. Disconnect 3D RAVE valve oil lines and vacuum/ pressure hoses.
7. Remove screws retaining the 3D RAVE valve housing **no. 5** to the cylinder.
8. Pull valve assembly out.

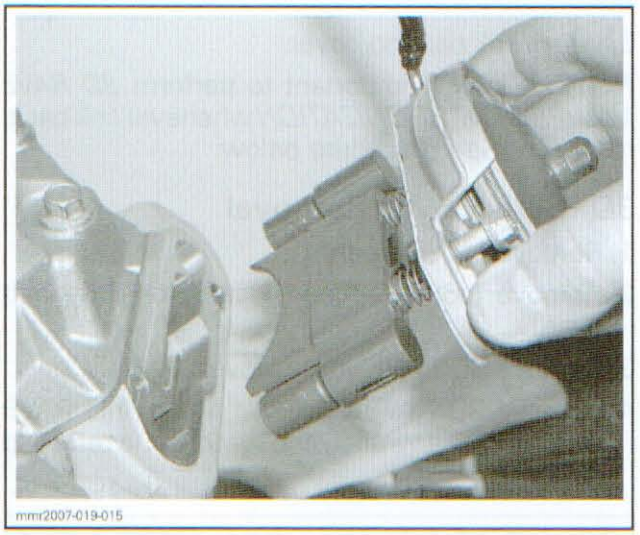

NOTE: Be careful not to loose springs underneath housing.

3D RAVE Valve Disassembly

1. Carefully remove spring **no. 3** retaining bellow **no. 2** to valve piston **no. 1**.

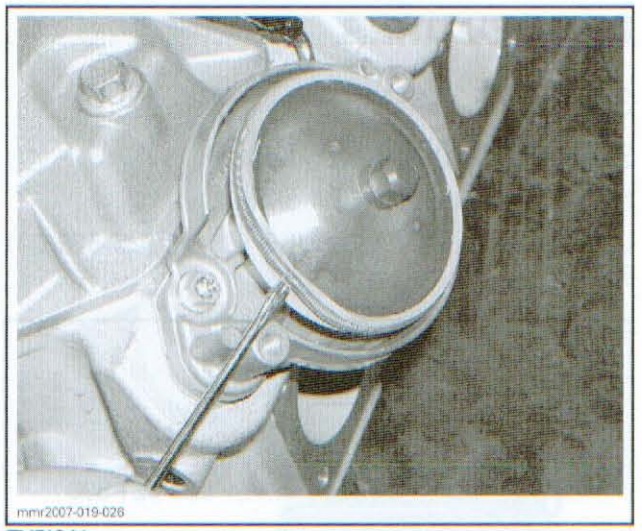

TYPICAL

2. Free bellow from valve piston.
3. Carefully unscrew valve piston then remove compression spring.

⚠ CAUTION **Firmly hold valve piston. The compression spring inside the valve applies pressure against the piston.**

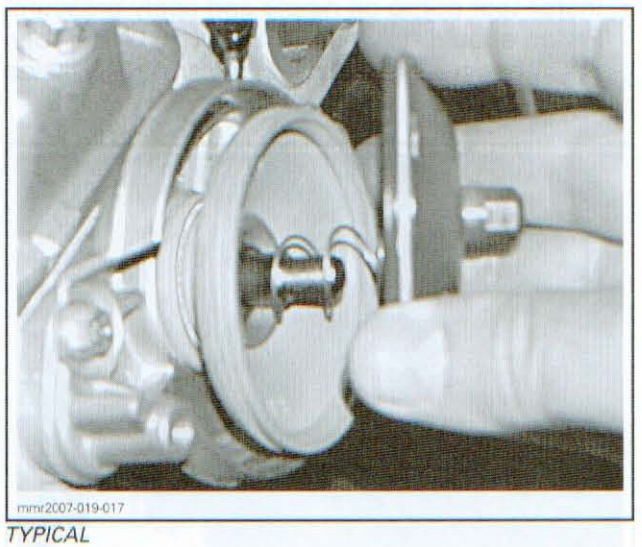

TYPICAL

4. Carefully remove bellow **no. 2** from valve housing **no. 5**.

NOTE: If oil is found in housing area, replace seals.

5. Extract RAVE valve from housing.
6. Take note of seals orientation and carefully pry them out.

www.midwestmanuals.com



TYPICAL

3D RAVE Valve Cleaning

The 3D RAVE valves should be cleaned every 3 years or 10 000 km (6000 mi) whichever comes first. Clean carbon deposits as required.

Thoroughly clean all 3D RAVE VALVES components and cylinder slots.

No special solvents or cleaners are required when cleaning the valve.

Valves Frequently Gummed

If the valves are getting gummed more frequently than usual, do the following:

- Check if XP-S synthetic blend injection oil is used.
- Check lubrication hoses for restriction.
- Check lubrication hoses for presence of air. Bleed system if needed.
- Check lubrication check valves as explained in this section.

3D RAVE Valve Inspection

Check valves **no. 6** for breakage.

Check valves for wear at sliding points and straightness.

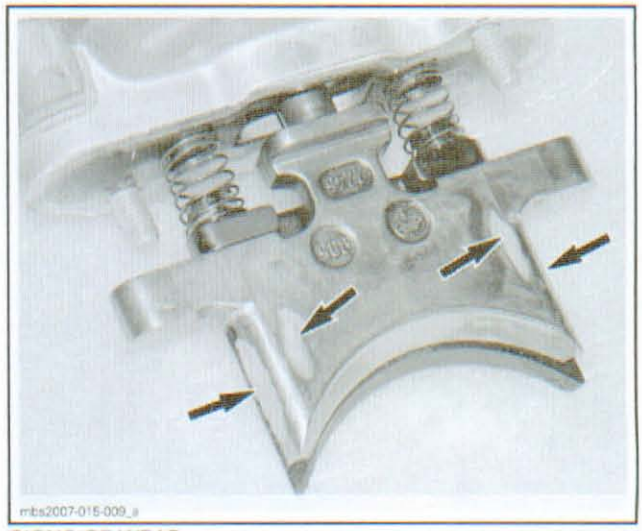

SIGNS OF WEAR

Check spring condition and straightness.

NOTE: Oil dripping from draining hole indicates a defective seal and a loosen retaining spring or damaged bellows.

Check for cracked, dried or perforated bellows **no. 2**.

NOTE: Make sure hoses are not leaking, kinked or damaged.

3D RAVE Valve Assembly

Position parts as per illustrations.

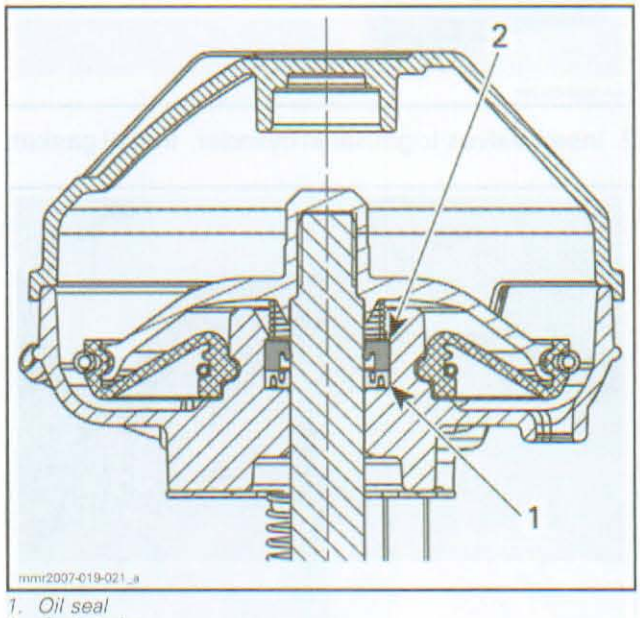

1. *Oil seal*
2. *Gasket ring*

Use an appropriate pusher to reinstall seals.

www.midwestmanuals.com

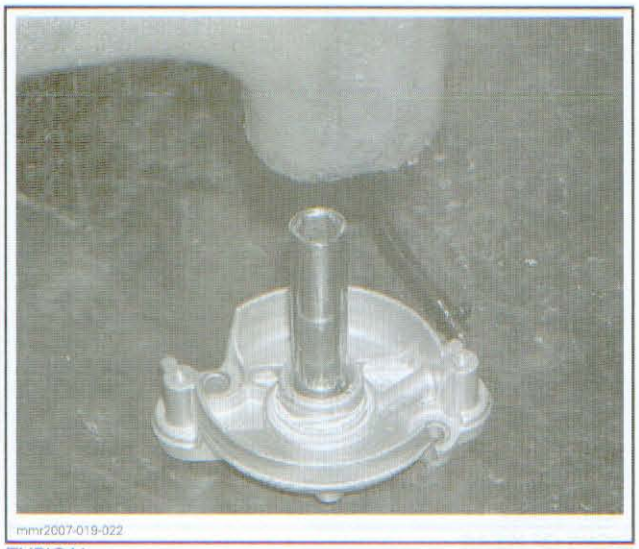
mmr2007-019-022

TYPICAL

1. Assemble together the main and side valves.

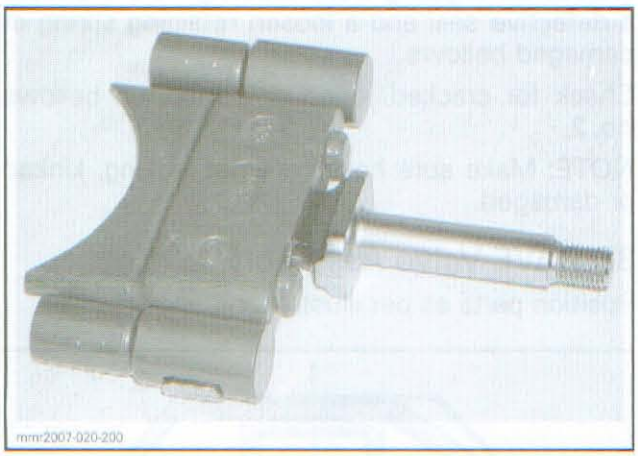
mmr2007-020-200

2. Insert valves together in cylinder. Install gasket.

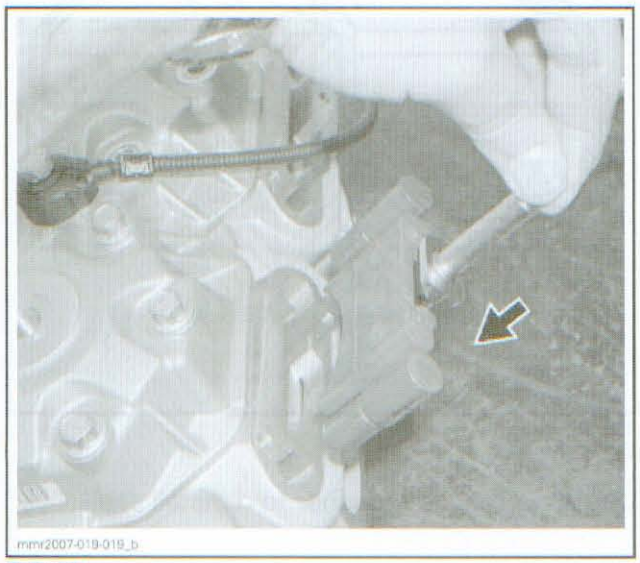
mmr2007-019-019_b

TYPICAL

3. Align springs on stud ends of valves.

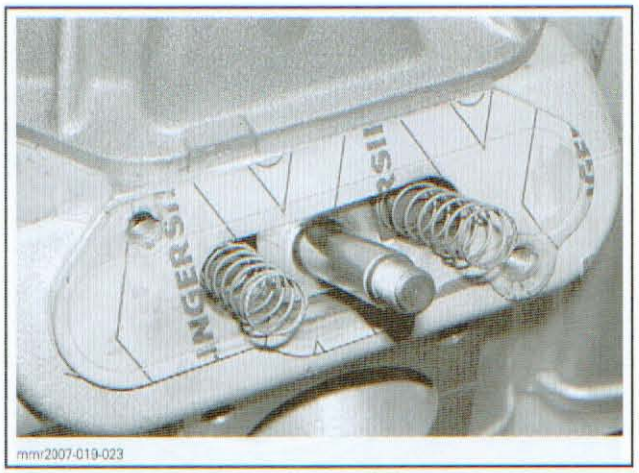
mmr2007-019-023

4. Apply MOLYKOTE G-N (P/N 420 297 433) to valve shaft and on seals in housing.
5. Install housing and carefully align springs on stud ends of housing.

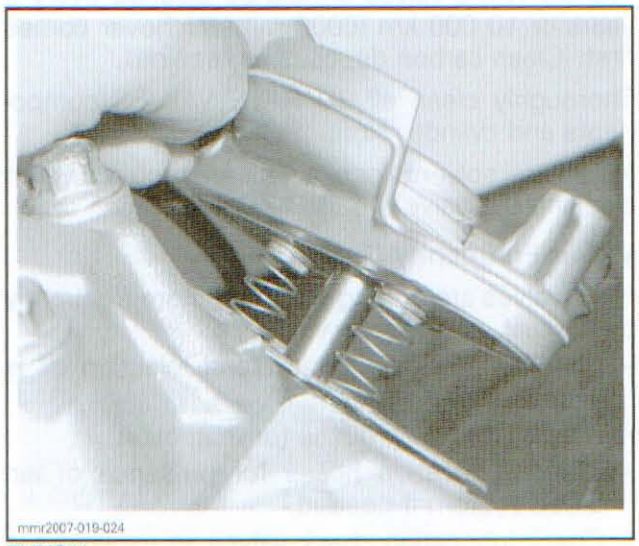
mmr2007-019-024

TYPICAL

6. Install lower spring **no. 4** on bellow.
7. Apply DREI BOND SEALING COMPOUND (P/N 420 297 906) on the bellow's lower rib, then install bellow and spring.

www.midwestmanuals.com



1. Apply Drei Bond here

8. Install compression spring then tighten valve piston.
9. Apply DREI BOND SEALING COMPOUND (P/N 420 297 906) on valve piston groove.



1. Apply Drei Bond here

10. Position bellow on valve piston then secure top retaining spring **no. 3** as follows.
11. Attach a locking tie to spring.

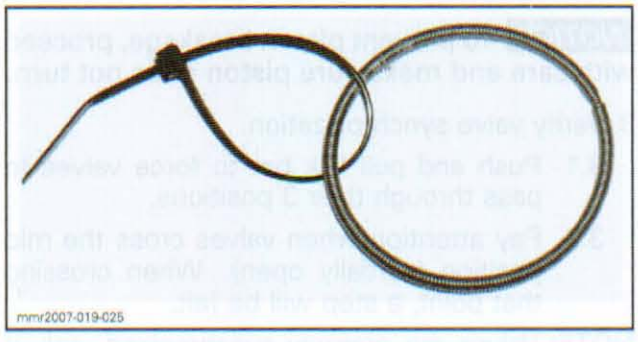

12. Block valve piston in the open position with a suitable socket.

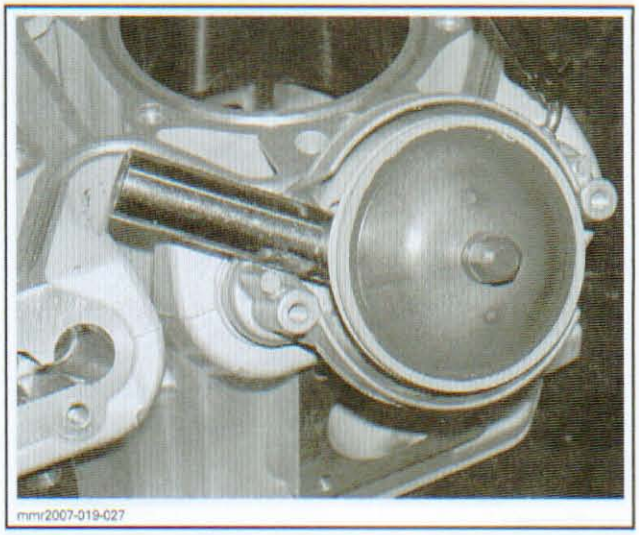

13. Position joint of spring under your thumb.
14. Hold spring with your thumb while sliding spring on the other side using the locking tie.



1. Joint of spring under thumb

15. Continue sliding locking tie all around the edge of valve piston.

www.midwestmanuals.com


mmr2007-019-029_a

NOTE: Take care there is no strain in the bellow that could apply some bending force or torsion to the 3D RAVE valve. That may contribute to a RAVE valve jam.

Push and pull valve piston to make sure it moves freely.

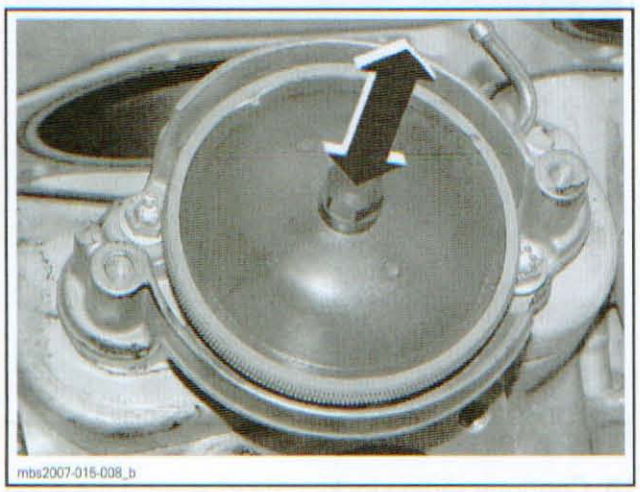
mbs2007-015-008_b

16. When installing valve assembly in its housing, center valve horizontally and longitudinally then hand tighten screws.

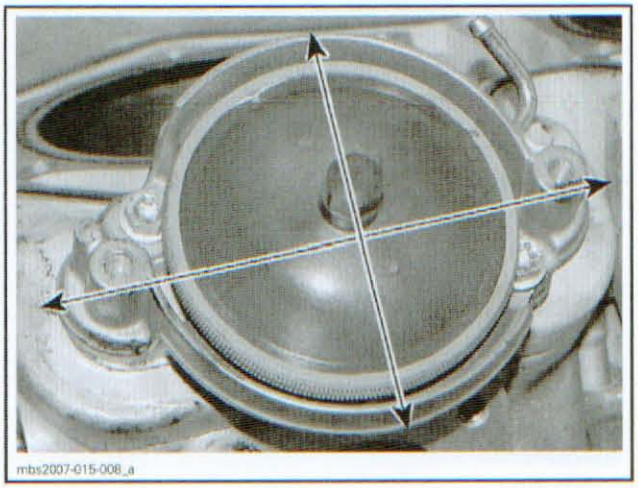
mbs2007-015-008_a

17. Tighten screws and check valve for free movement again. If some friction is felt, slightly loosen screws and readjust housing then retighten screws.

Repeat the process until a free movement is obtained.

18. Install position sensor.
19. Position link bar on valve pistons and install nuts, with LOCTITE 243 (P/N 293 800 060) on piston threads but do not tighten yet.
20. Install lubrication and vacuum/pressure hoses.
21. Perform *3D RAVE VALVE SYNCHRONIZATION* procedure below to complete link bar installation. This step is very important.
22. Bleed oil lines. Refer to *OIL PUMP (600 HO E-TEC)* in the *LUBRICATION SYSTEM* section.

3D RAVE Valve Synchronization

1. With retaining nuts loose, push the center of the link bar downwards in order to seat both valves on their fully closed position and hold.
2. Prevent pistons from turning and tighten both nuts while holding the link bar down. Do not overtighten.

NOTICE To prevent piston breakage, proceed with care and make sure piston does not turn.

3. Verify valve synchronization.
   - 3.1 Push and pull link bar to force valves to pass through their 3 positions.
   - 3.2 Pay attention when valves cross the mid position (partially open). When crossing that point, a step will be felt.

NOTE: Valves are properly synchronized, only if one step is felt at mid position. Valve synchronization is critical for proper engine performance.

www.midwestmanuals.com

4. If valves are not perfectly synchronized, loosen nuts and repeat synchronization procedure.
5. Start engine and recheck 3D RAVE valves operation.

NOTE: Pistons should move freely. If not, look for excessive friction due to torsion force applied on the piston rods during installation.

6. Install cover.
7. Perform the *3D RAVE VALVES MID POSITION SETTING*, refer to *3D RAVE VALVES POSITION SENSOR*, this step is very important.

ACTUATOR CHECK VALVES

Check Valve Leak Test

1. Disconnect check valve.
2. Install test pump as shown.
3. Pressurize check valve to 34 kPa (5 PSI).

Valve should stand pressure.

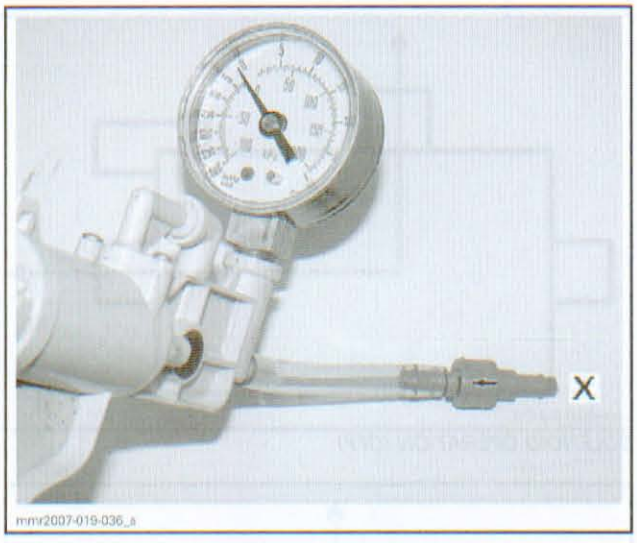

4. Install test pump in the opposite side.
5. Pressurize check valve.

Air should flow freely.

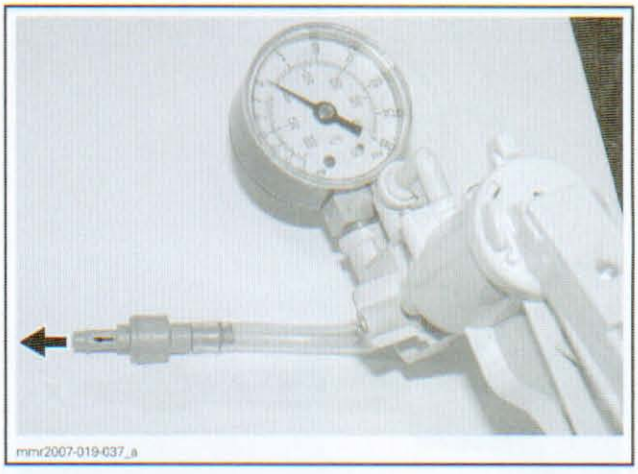

Replace valve if any test failed.

Check Valve Installation

Ensure to reinstall all check valves in the proper direction.

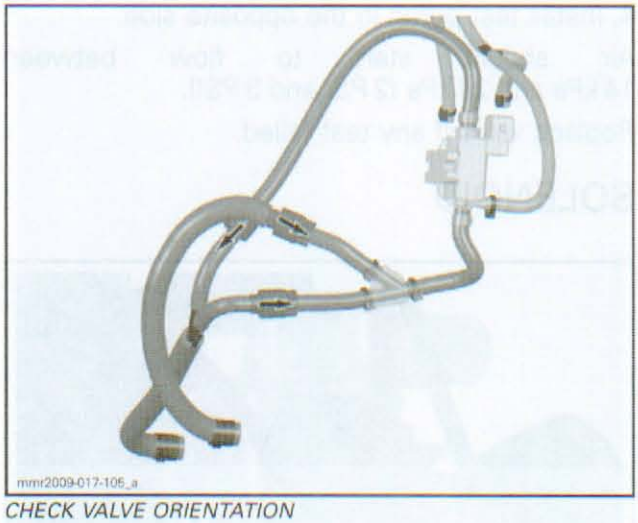

CHECK VALVE ORIENTATION

LUBRICATION CHECK VALVES

Check Valve Test

1. Disconnect check valve.
2. Install test pump as shown.

www.midwestmanuals.com

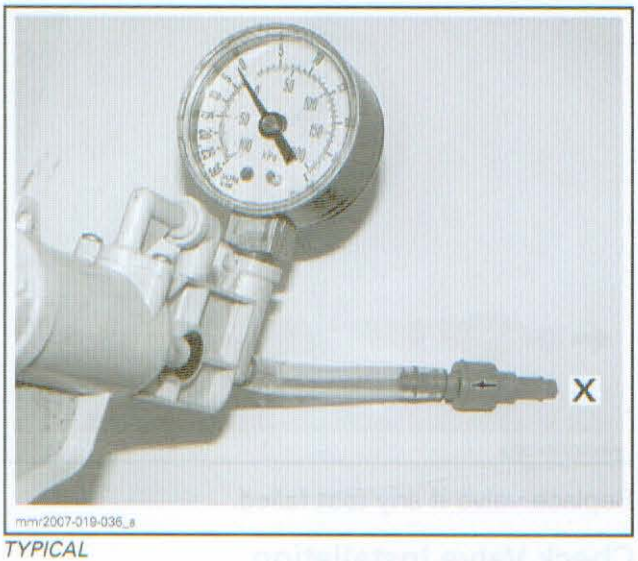

TYPICAL

3. Pressurize check valve to 10 kPa (1.5 PSI).

Valve should stand pressure.

4. Install test pump in the opposite side.

Air should start to flow between 14 kPa and 24 kPa (2 PSI and 3 PSI).

Replace valve if any test failed.

SOLENOID

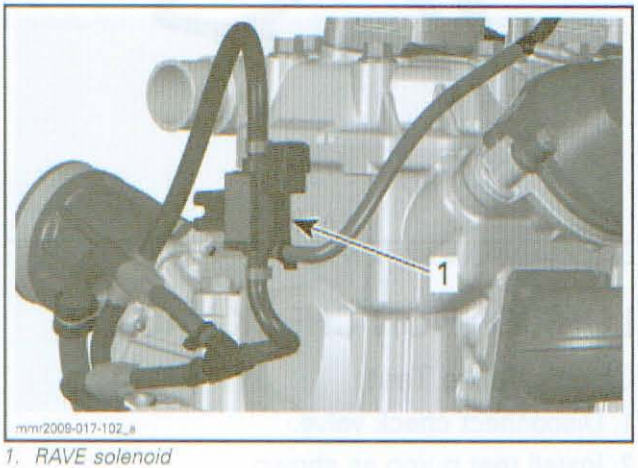

1. RAVE solenoid

NOTE: First ensure the problem is not related with tubes connection and RAVE valves themselves.

Solenoid Test with B.U.D.S.

Refer to *COMMUNICATION TOOLS/B.U.D.S. SOFTWARE* section for proper connection to vehicle.

Using B.U.D.S. software (E-TEC version), energize RAVE solenoid from **Activation** tab.

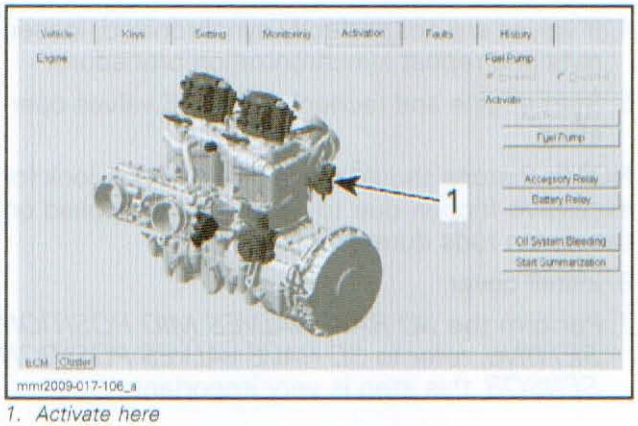

1. Activate here

This will validate the RAVE solenoid mechanical and electrical operation.

If the solenoid does not work or works only when T-HARNESS (P/N 529 035 869) is connected, proceed with *SOLENOID INPUT VOLTAGE TEST* in this section.

Solenoid Leak Test

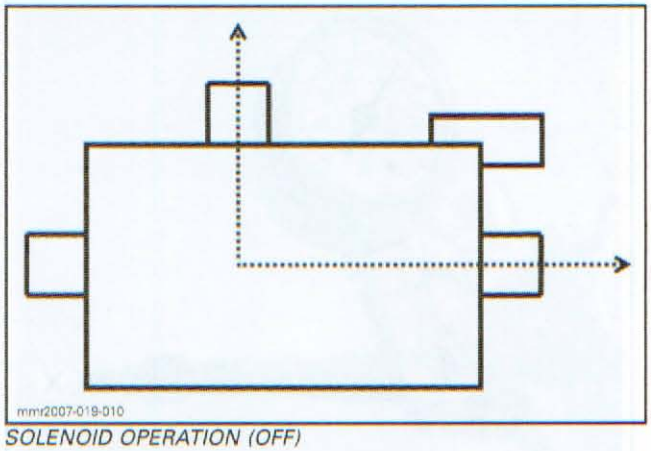

SOLENOID OPERATION (OFF)

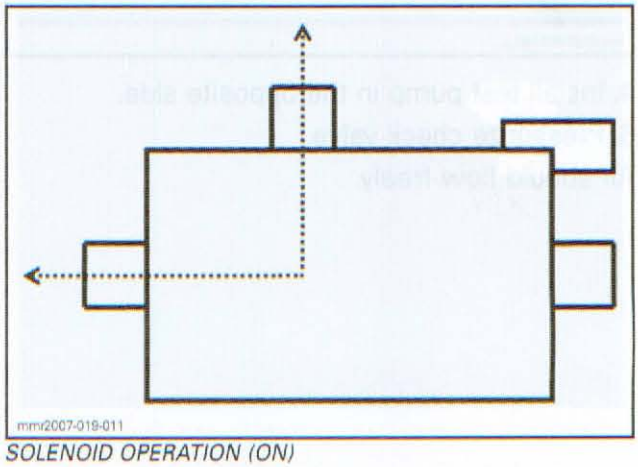

SOLENOID OPERATION (ON)

NOTE: Test each solenoid individually.

1. Unplug supply hose from solenoid.
2. Install test pump on solenoid nipple.

www.midwestmanuals.com

3. Supply 12 Vdc to solenoid terminals. Ensure to respect polarity.

NOTE: B.U.D.S. may be used to activate solenoid when performing this test but the activation lasts less than one second.

4. Pressurize solenoid.

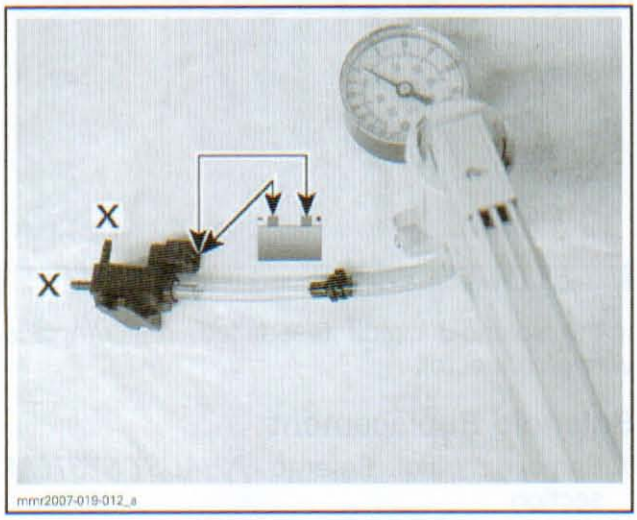

TEST PRESSURE
69 - 103 kPa (10 - 15 PSI)

Wait for some time to see if pressure drops:

- If pressure does not build up or drops, replace solenoid.
- If pressure is maintained, continue testing.

Disconnect solenoid. Pressure should evacuate through upper nipple.

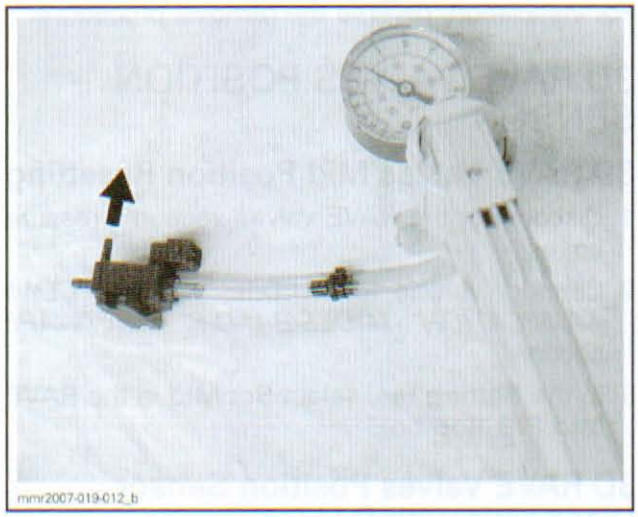

5. Unplug outlet hose from solenoid.
6. Install test pump on solenoid nipple. Pressurize to the same pressure as before.

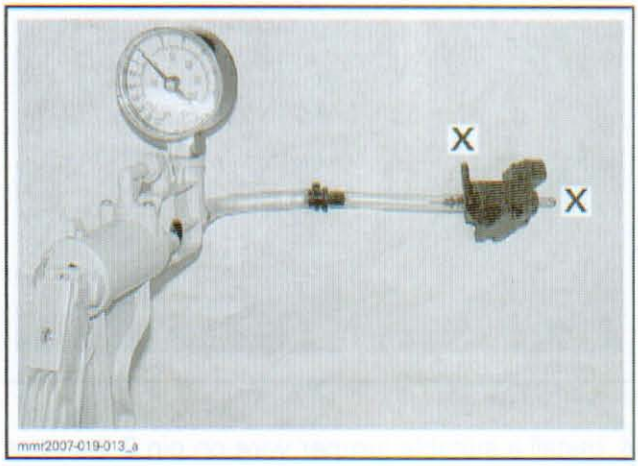

Wait some time to see if pressure drops:

- If pressure does not build up or drops, replace solenoid.
- If pressure is maintained, continue testing.

7. Supply 12 Vdc to solenoid terminals. Ensure to respect polarity.
8. Pressure should evacuate through upper nipple.

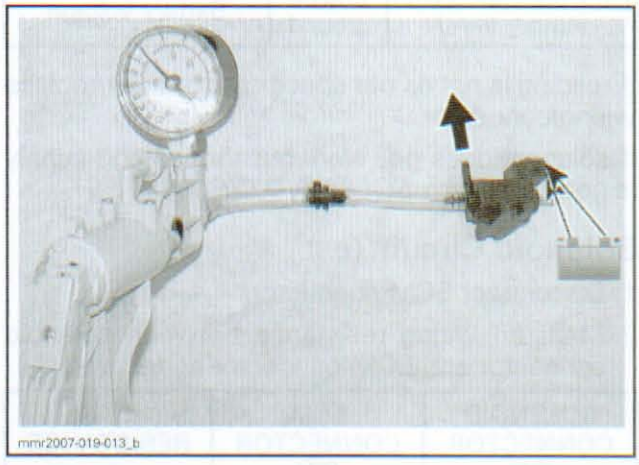

If any test failed, replace solenoid.

Solenoid Input Voltage Test

1. Remove muffler. Refer to *EXHAUST SYSTEM.* section.
2. Remove the acoustic panel.
3. Disconnect the connector from the solenoid.

www.midwestmanuals.com

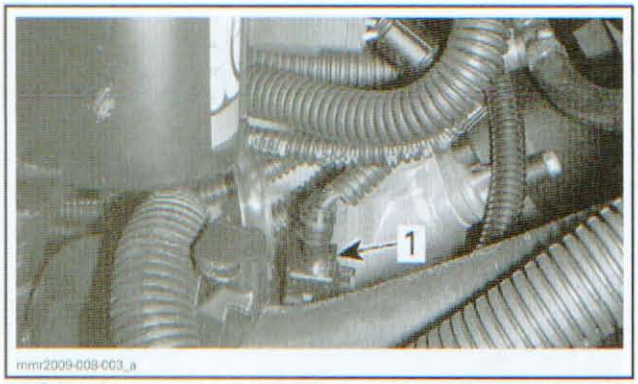

1. Solenoid connector

4. Install a suitable jumper wire on pin 2 (harness side) taking care not to damage terminal.
5. Reinstall muffler.

NOTICE **Make sure there is no contact between muffler and jumper wire.**

6. Start engine and measure voltage on jumper wire as follows.

TEST PROBE		MEASUREMENT
Pin 2 (extended with jumper wire)	Engine ground	Battery voltage

If reading is not as per specification repair/replace wiring/connector.

If solenoid does not work but the voltage supply is good, perform *SOLENOID CIRCUIT TEST.*

Solenoid Circuit Test

1. Disconnect ECM connector.
2. Measure wiring resistance between solenoid connector and ECM connector as follows.

SOLENOID CONNECTOR PIN	ECM CONNECTOR PIN	RESISTANCE
1	Connector J1B pin 22	Close to 0 Ω

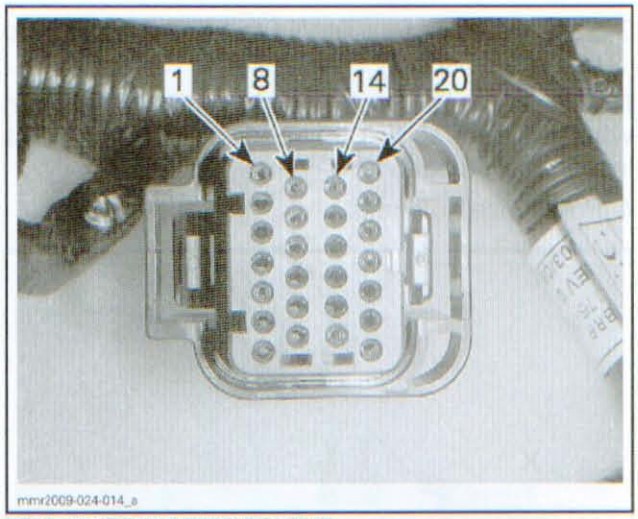

ECM JB1 CONNECTOR PIN OUT

If the solenoid circuit test failed, repair/replace wiring/connector.

Solenoid Replacement

1. Remove muffler. Refer to *EXHAUST SYSTEM.* section.
2. Remove the acoustic panel.

NOTE: Mark hose locations of RAVE solenoid for reinstallation.

3. Disconnect solenoid.
4. Cut the locking ties retaining the coolant hoses to the plastic bracket.
5. Remove solenoid screws.
6. Cut the small Oetiker clamps securing the hoses to the solenoid.

For installation, reverse the removal procedure.

3D RAVE VALVES POSITION SENSOR

3D RAVE Valves Mid Position Resetting

1. Disconnect the RAVE valves vacuum/pressure hoses.
2. Connect vehicle to B.U.D.S., Refer to *COMMUNICATION TOOLS/B.U.D.S. SOFTWARE* section.
3. In the **Setting** tab, select **Set Mid** in the **RAVE Mid Position** box.

3D RAVE Valves Position Sensor Diagnostic with B.U.D.S.

Whenever ECM detects a problem affecting the following, it will register a fault code.

– Defective position sensor

www.midwestmanuals.com

- Defective position sensor wiring
- Valves not reaching the desired position.

Refer to *COMMUNICATION TOOLS/B.U.D.S. SOFTWARE* for proper connection to vehicle.

For fault codes reading procedure and definition, refer to *MONITORING SYSTEM/FAULT CODES*.

3D Rave Valves Position Sensor Removal

1. Disconnect position sensor connector.
2. Remove 3D RAVE valves cover and link bar, see *3D RAVE VALVES REMOVAL* in this section.
3. Remove 3D RAVE valves position sensor.

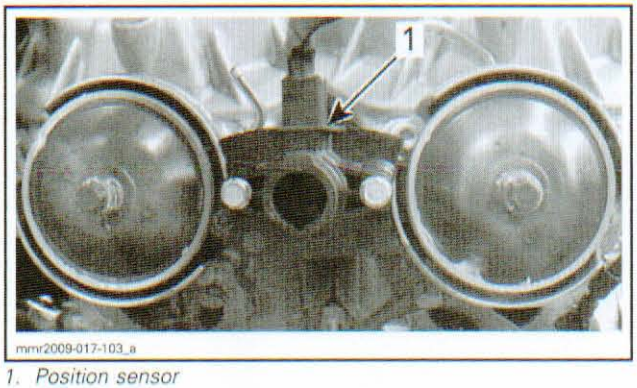

1. Position sensor

NOTE: It is very important to perform *3D RAVE VALVES SYNCHRONIZATION* whenever link bar is removed. See procedure in this section.

3D Rave Valves Position Sensor Installation

1. Apply LOCTITE 243 (P/N 293 800 060) on screws threads and install position sensor with wiring upwards.
2. Install connector.
3. Position link bar on valve pistons and install nuts on piston threads but do not tighten yet.
4. Perform *3D RAVE VALVE SYNCHRONIZATION* procedure in this section to complete link bar installation. This step is very important.

www.midwestmanuals.com

www.midwestmanuals.com

RAVE (797)

SERVICE TOOLS

Description	Part Number	Page
VACUUM/PRESSURE PUMP	529 021 800	137

SERVICE PRODUCTS

Description	Part Number	Page
DREI BOND SEALING COMPOUND	420 297 906	141
MOLYKOTE G-N	420 297 433	140

www.midwestmanuals.com

800R

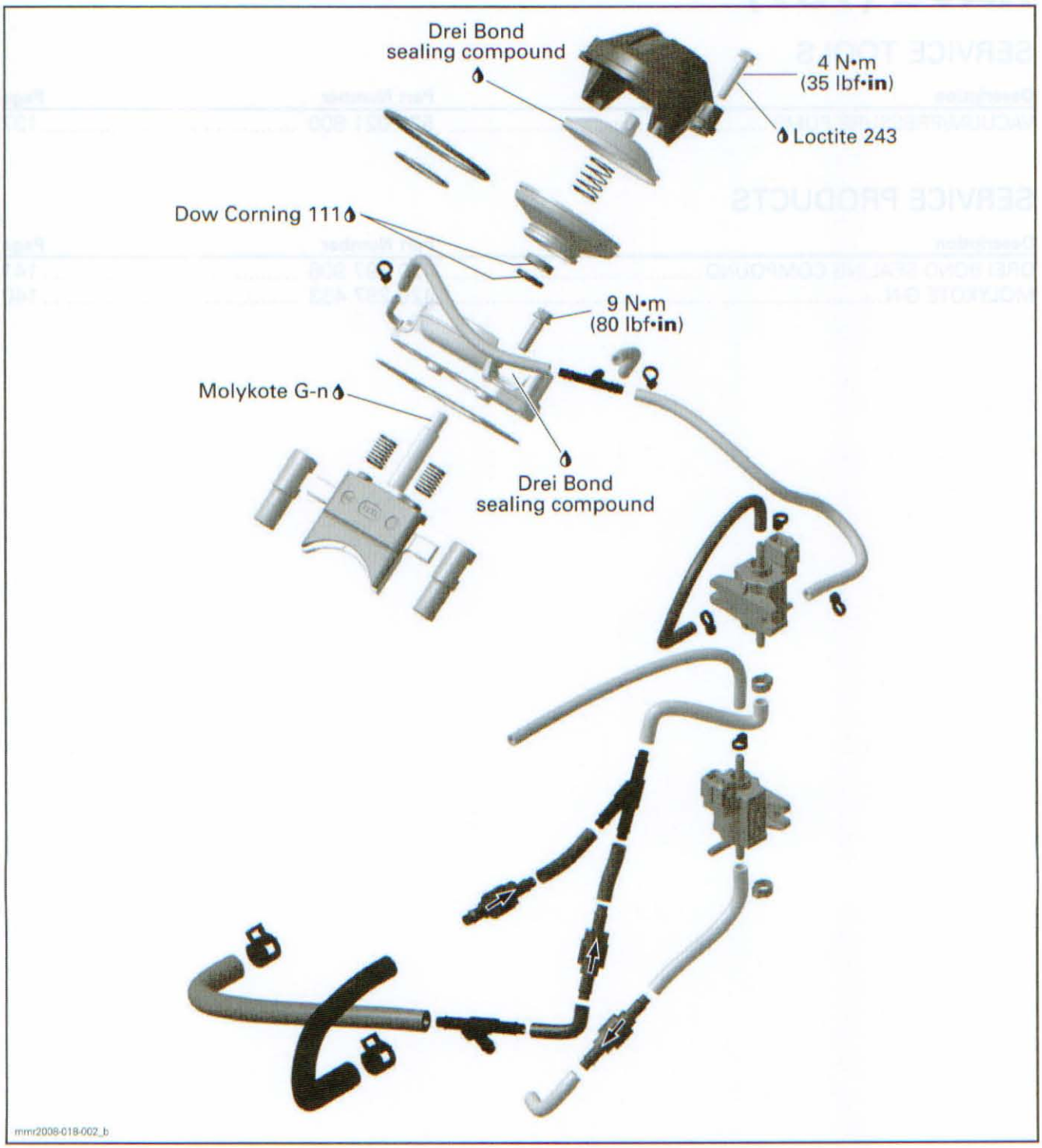

www.midwestmanuals.com

GENERAL

During assembly/installation, use torque values and service products as in the exploded view.

Clean threads before applying a threadlocker. Refer to *SELF-LOCKING FASTENERS PROCEDURE* and *LOCTITE APPLICATION PROCEDURE* at the beginning of this manual for complete procedure.

⚠ WARNING

Torque wrench tightening specifications must be strictly adhered to.
Locking devices (e.g.: locking tabs, elastic stop nuts, self-locking fasteners, cotter pins, etc.) must be replaced with new ones.

Hoses or cables removed or disconnected must be installed and routed at the same place.

NOTICE **Locking ties removed during a procedure must be replaced and installed at the same location.**

SYSTEM DESCRIPTION

3D RAVE Basic Operation

3-step RAVE valves are used. Their positions vary according to engine operating condition.

The RAVE valve steps are:
- Fully closed
- Partially opened
- Fully opened.

RAVE valves are activated by 2 solenoids that are controlled by the ECM through mappings.

Many different mappings are used by the ECM to control the 3D RAVE valves. The mappings are based on current engine RPM, crankshaft rate of acceleration or deceleration and the following inputs: intake temperature, TPS, knock sensor, engine coolant temperature and APS.

NOTE: 3D RAVE valves may go through all 3 positions or skip the partially open position and go directly to either the fully open or closed positions depending how quickly the throttle is depressed and the engine load.

Solenoids use crankcase pulses (pressure and vacuum) to open or close the valves.

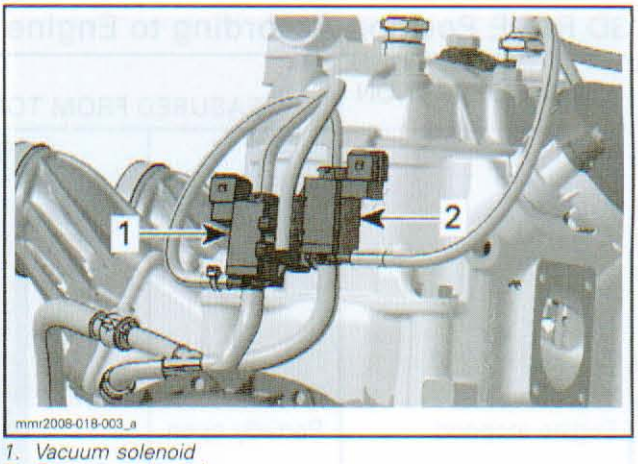

1. *Vacuum solenoid*
2. *Pressure solenoid*

An arrangement of check valves and Y-fittings allows to separate the crankcase vacuum pulses from the pressure pulses.

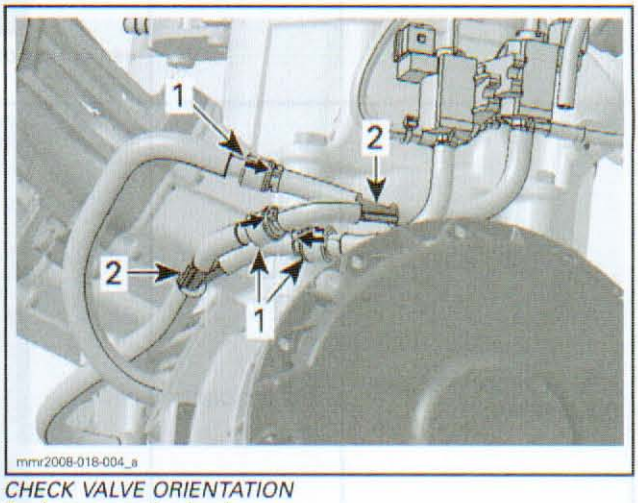

CHECK VALVE ORIENTATION
1. *Arrows on check valves*
2. *Arrows on Y-fittings*

www.midwestmanuals.com

3D RAVE Position According to Engine Operation

ENGINE OPERATION	RAVE VALVE POSITION MEASURED FROM TOP OF GREEN BELLOW TO EDGE OF RAVE HOUSING	
Engine stopped	Partially open	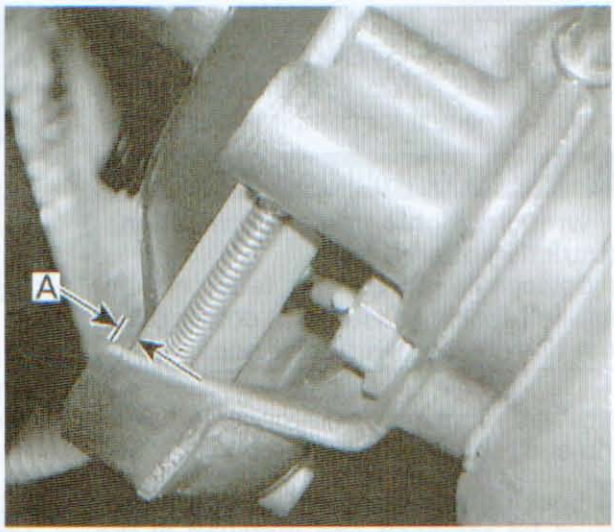 mbs2007-015-002_a A: Approximately 1 mm (1/32 in) down
Idle to approximately 6200 RPM	Fully closed	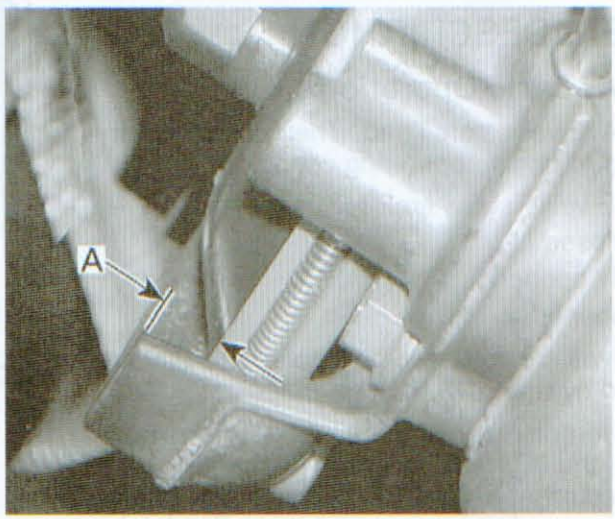 mbs2007-015-001_a A: Approximately 6 mm (1/4 in) down

www.midwestmanuals.com

<table>
<tr><th>ENGINE OPERATION</th><th colspan="2">RAVE VALVE POSITION
MEASURED FROM TOP OF GREEN BELLOW TO EDGE OF RAVE HOUSING</th></tr>
<tr><td>Approximately
6200 to 7900 RPM
(typical trail riding)</td><td>Partially
opened</td><td>NOTE: Same as engine stopped position.
 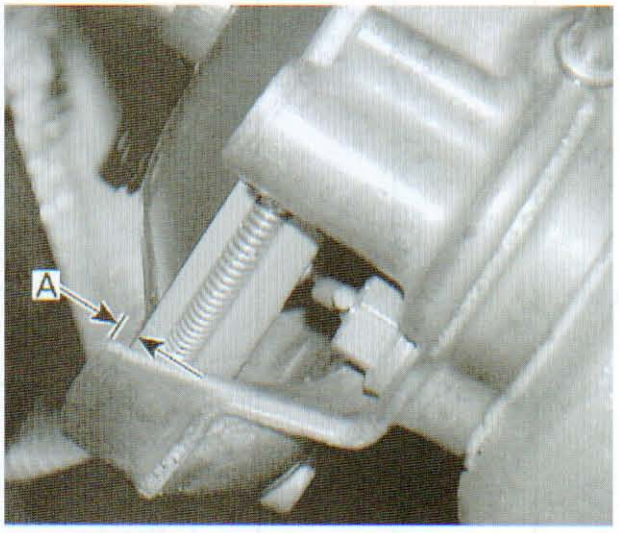

mbs2007-015-002_a
A: Approximately 1 mm (1/32 in) down</td></tr>
<tr><td>Approximately
7900 RPM to top
RPM</td><td>Fully opened</td><td> 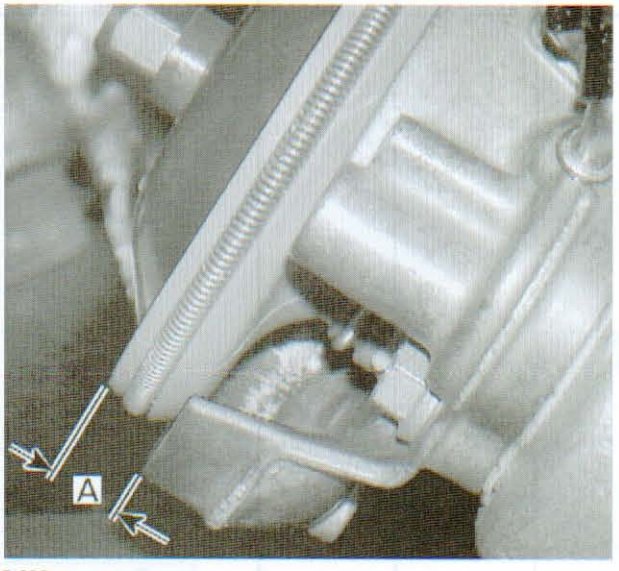

mbs2007-015-003_a
A: Approximately 8 mm (5/16 in) up</td></tr>
</table>

www.midwestmanuals.com

Solenoid State According to Engine Operation

ENGINE OPERATION	VACUUM SOLENOID	PRESSURE SOLENOID	DIAGRAM
Engine stopped	OFF	OFF	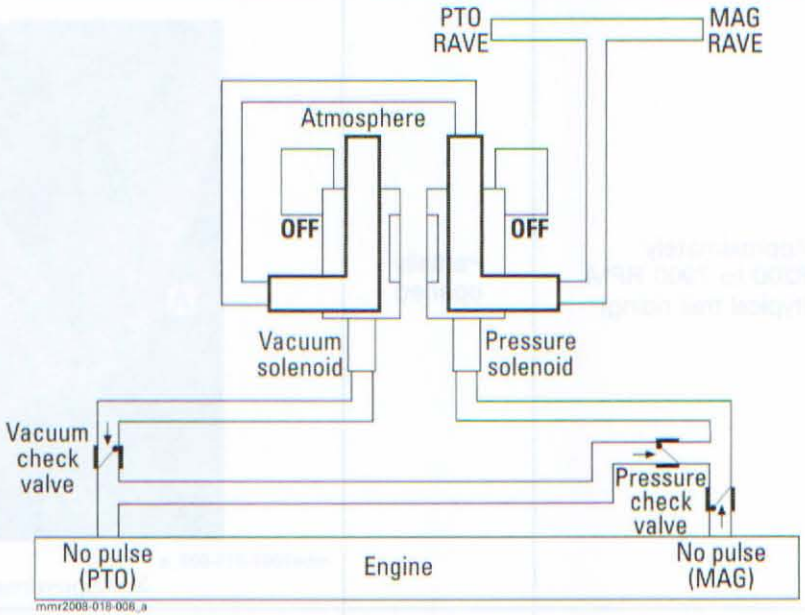
Idle to approximately 6200 RPM	ON	OFF	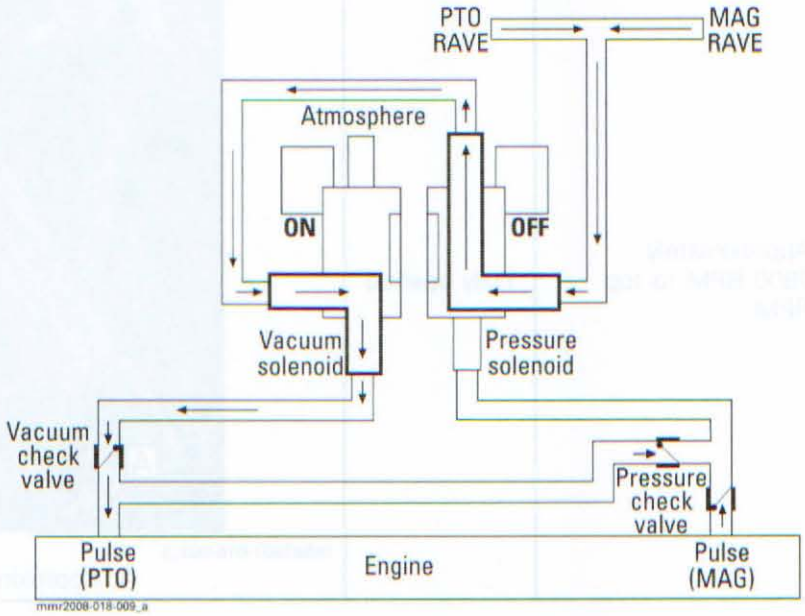

www.midwestmanuals.com

ENGINE OPERATION	VACUUM SOLENOID	PRESSURE SOLENOID	DIAGRAM
Approximately 6200 to 7900 RPM (typical trail riding)	OFF	OFF	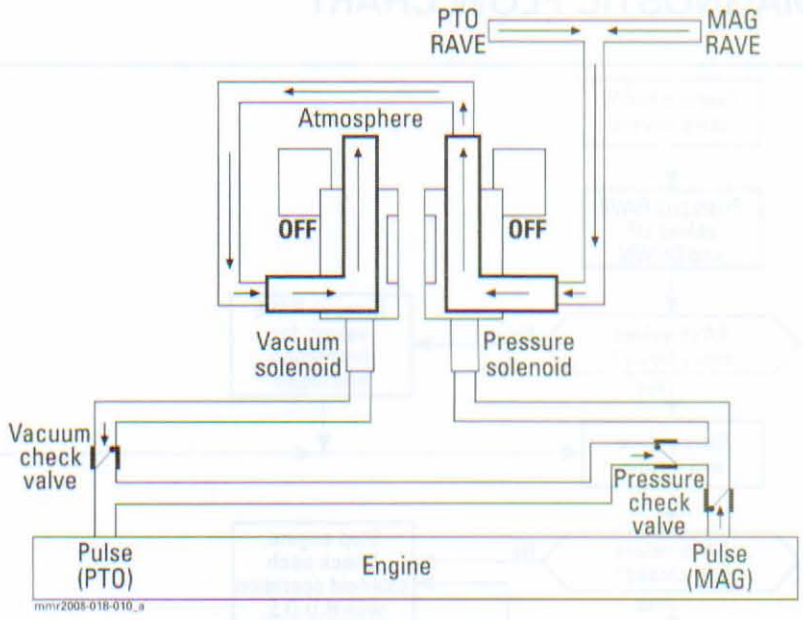
Approximately 7900 RPM to top RPM	ON	ON	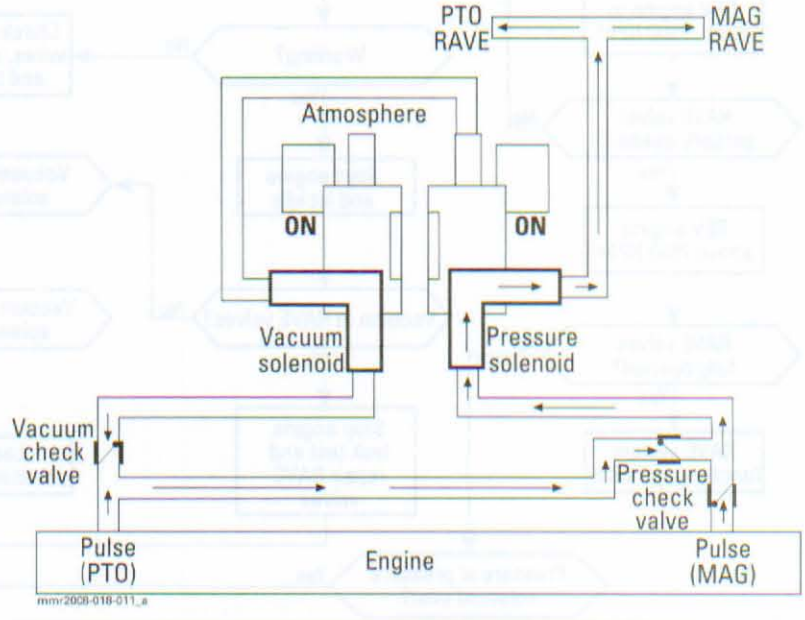

www.midwestmanuals.com

TROUBLESHOOTING

DIAGNOSTIC FLOW CHART

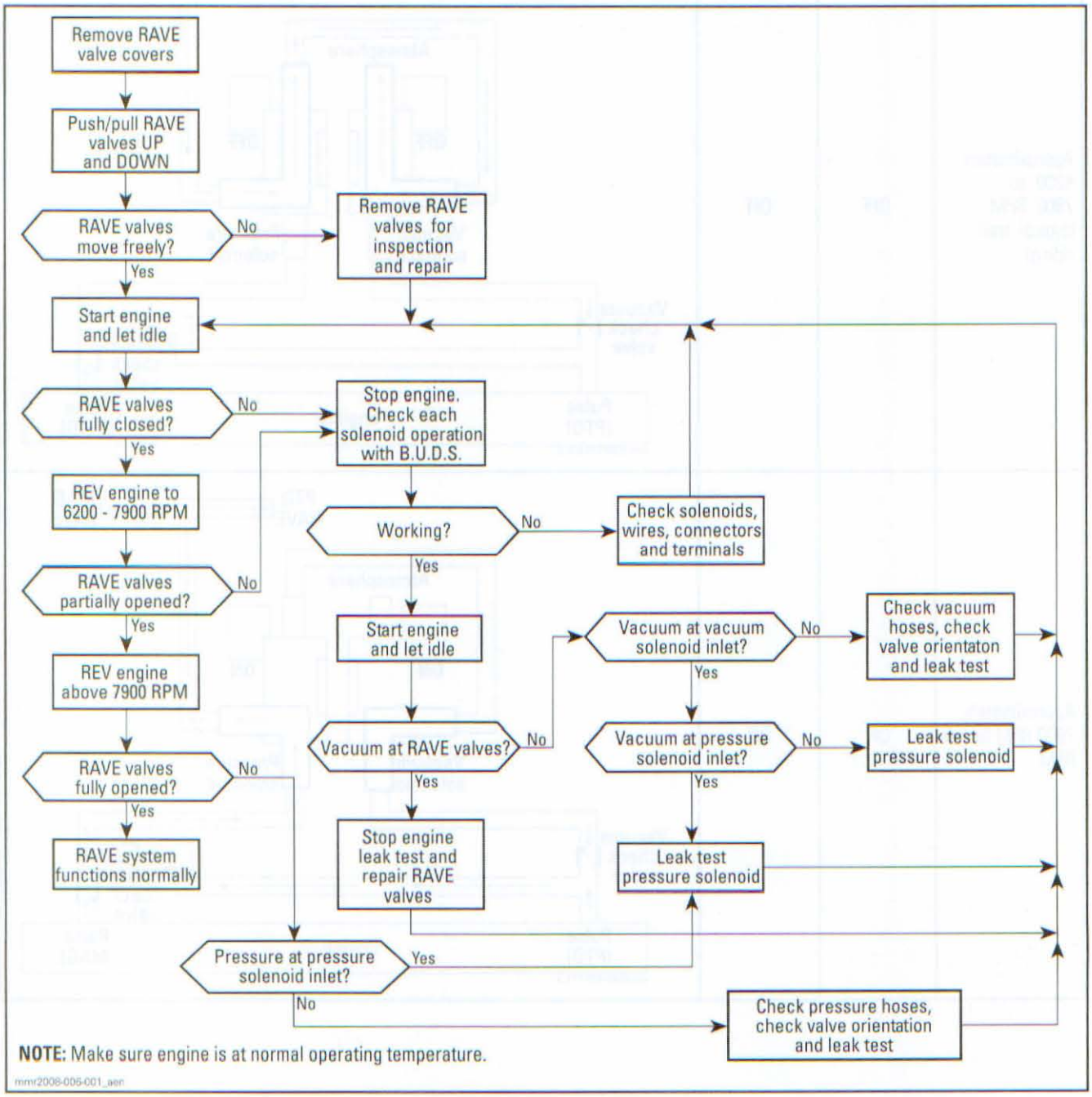

www.midwestmanuals.com

TROUBLESHOOTING TIPS

Intermittent Engine Performance Problem

If engine does not always reach maximum RPM:

- Make sure problem is not related with transmission (belt, drive and driven pulleys).
- Check 3D RAVE valves operation. Refer to *DIAGNOSTIC FLOW CHART* in this section.

NOTE: Make sure there are no fault codes (active or occurred).

Solenoid Troubleshooting

Refer to the following table for engine behavior related to solenoid malfunction.

ENGINE RPM	VACUUM SOLENOID	PRESSURE SOLENOID	RAVE POSITION	ENGINE BEHAVIOR
Idle to approximately 6200 RPM	Defective	Defective	Partially open	Poor acceleration
	Defective	Functional	Partially open	Poor acceleration
	Functional	Defective	Fully closed	Normal operation
Approximately 6200 to 7900 RPM	Defective	Defective	Partially open	Normal operation
	Defective	Functional	Partially open	Normal operation
	Functional	Defective	Partially open	Normal operation
Approximately 7900 RPM to top RPM	Defective	Defective	Partially open	Cannot reach top RPM
	Defective	Functional	Fully open	Normal operation
	Functional	Defective	Fully closed	Cannot reach top RPM

PROCEDURES

3D RAVE VALVE

3D RAVE Valve Adjustment

There are no adjustments to be periodically checked.

3D RAVE Valve Leak Test

NOTE: Test each RAVE individually.

1. Use the VACUUM/PRESSURE PUMP (P/N 529 021 800).



2. Unplug the RAVE inlet hose.
3. Install test pump on nipple and apply pressure. Piston should fully rise. Otherwise or if it lowers rather quickly, check bellow and seals inside RAVE valve.

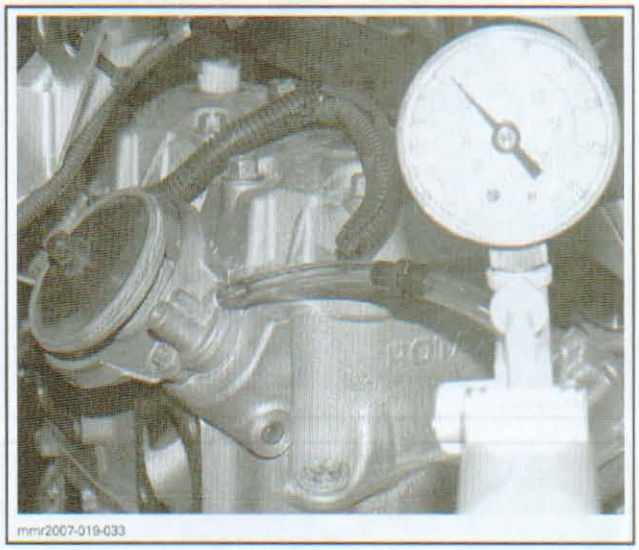

4. Then, apply vacuum. Piston should fully lower. Otherwise or if it rises rather quickly, check bellow and seals inside RAVE valve.

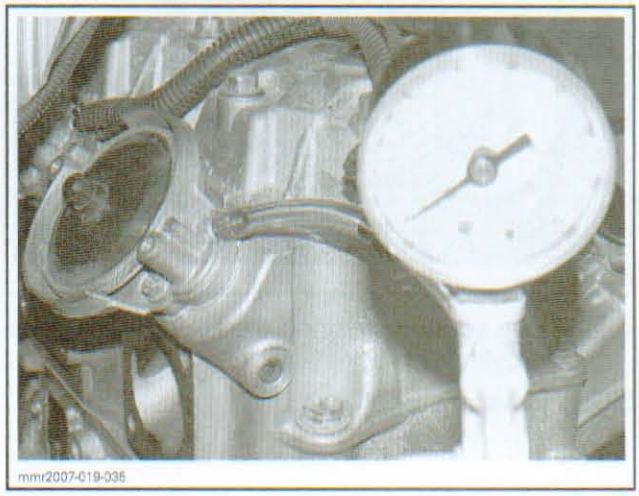

www.midwestmanuals.com

5. For check valves and solenoids leak tests, refer to *3D SOLENOIDS AND CHECK VALVES* in this section.

3D RAVE Valves Removal

1. Remove LH side panel.
2. Remove *DRIVE BELT GUARD*. Refer to *DRIVE BELT* section.
3. Remove 3D RAVE valve cover by removing screws.

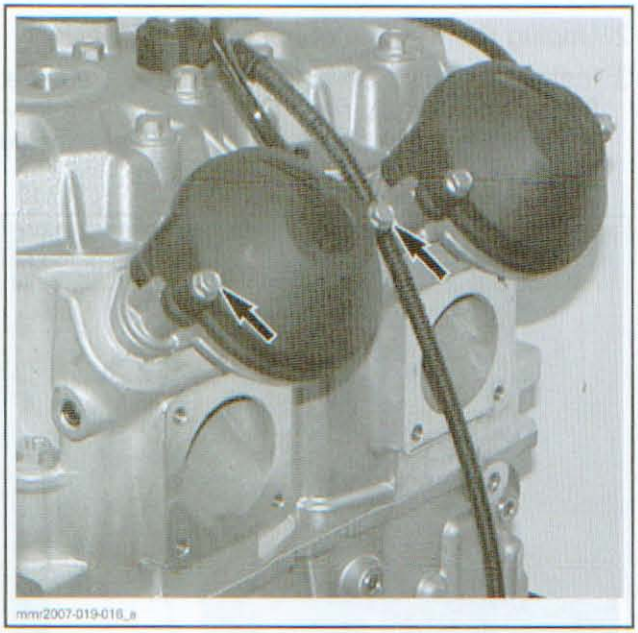

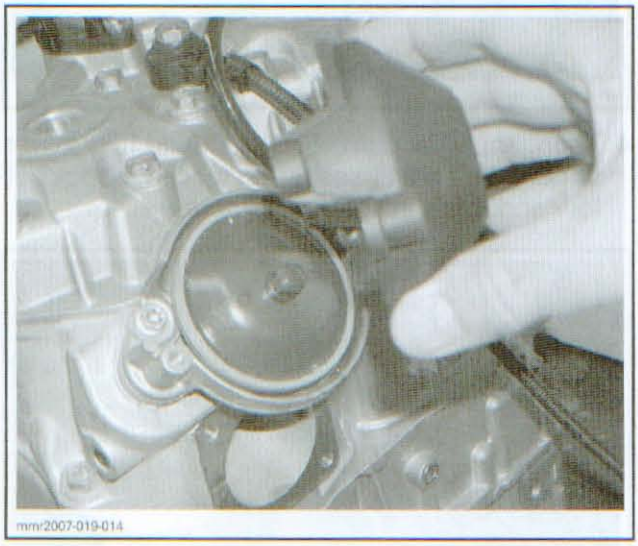

4. Remove screws securing the RAVE valve housing to cylinder block.
5. Pull valve assembly out.

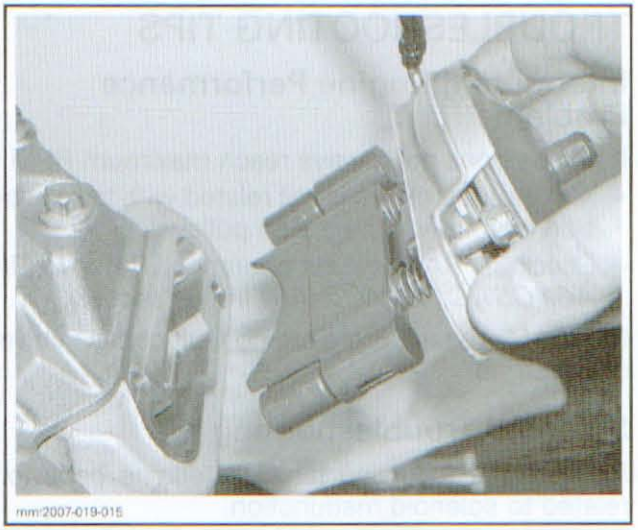

NOTE: Be careful not to loose springs underneath housing.

3D RAVE Valve Disassembly

1. Carefully remove spring retaining bellow to valve piston.

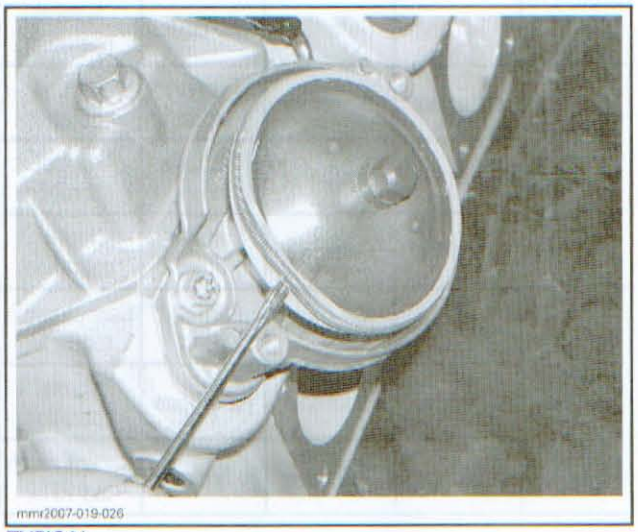

TYPICAL

2. Free bellow from valve piston.
3. Carefully unscrew valve piston then remove compression spring.

⚠ WARNING

Firmly hold valve piston. The compression spring inside the valve applies pressure against the piston.

www.midwestmanuals.com

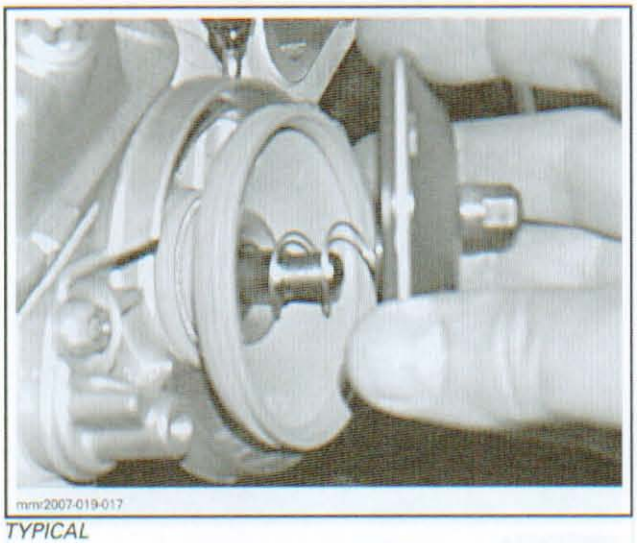

TYPICAL

4. Carefully remove bellow from valve housing.

NOTE: If oil is found in housing area, replace seals.

5. Extract RAVE valve from housing.

6. To remove seals, carefully pry them out.

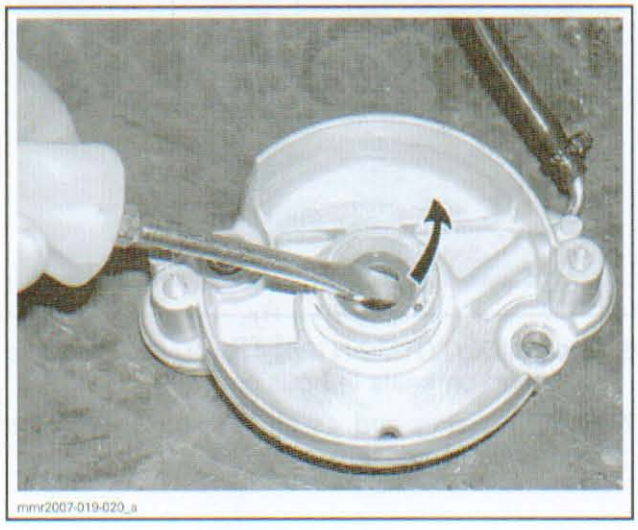

3D RAVE Valve Cleaning

Clean carbon deposits. Cleaning intervals depend upon the user's riding style and the quality of the oil used.

BRP suggests annual cleaning of the valve. If a customer uses lower quality oil than recommended, more frequent cleaning may be required.

No special solvents or cleaners are required when cleaning the valve.

3D RAVE Valve Inspection

1. Check valves for breakage.

2. Check valves for wear at sliding points and straightness.

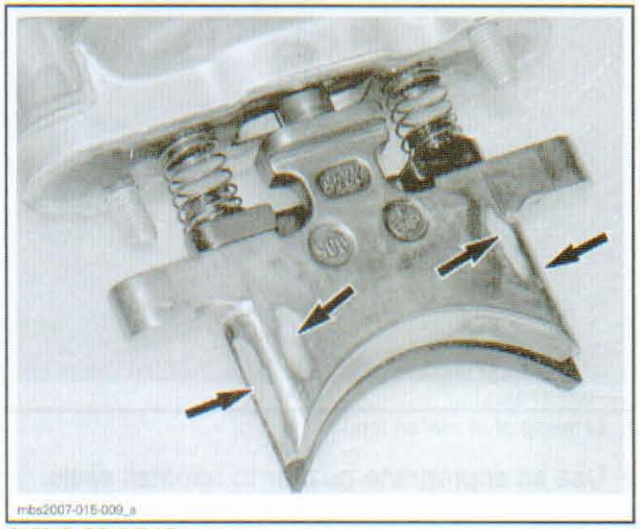

SIGNS OF WEAR

3. Check spring condition and straightness.

NOTE: Oil dripping from draining hole indicates a loosen spring or damaged bellows.

4. Check for cracked, dried or perforated bellows.

NOTE: Make sure hoses are not leaking, kinked or damaged.

3D RAVE Valve Assembly

1. Position parts as per illustrations.

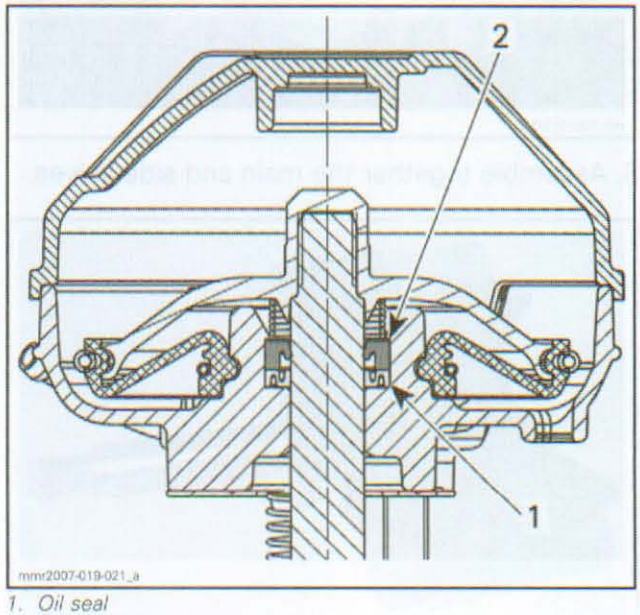

1. *Oil seal*
2. *Gasket ring*

www.midwestmanuals.com

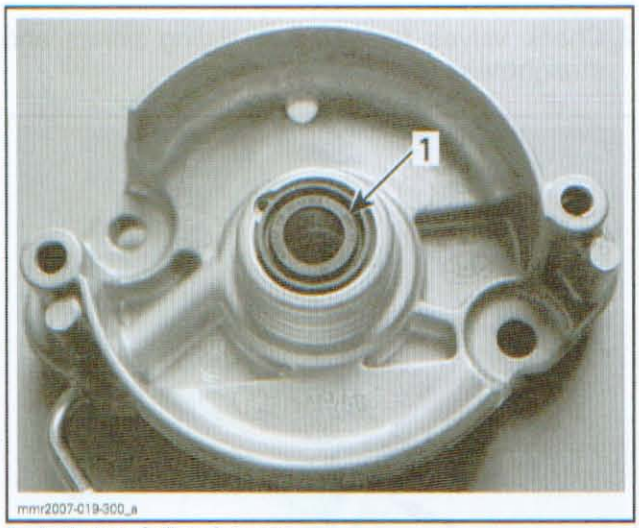

1. Lettering of oil seal on top

2. Use an appropriate pusher to reinstall seals.

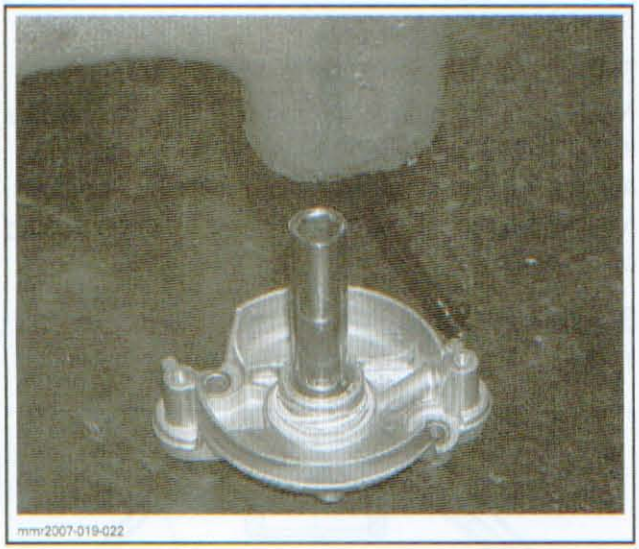

3. Assemble together the main and side valves.

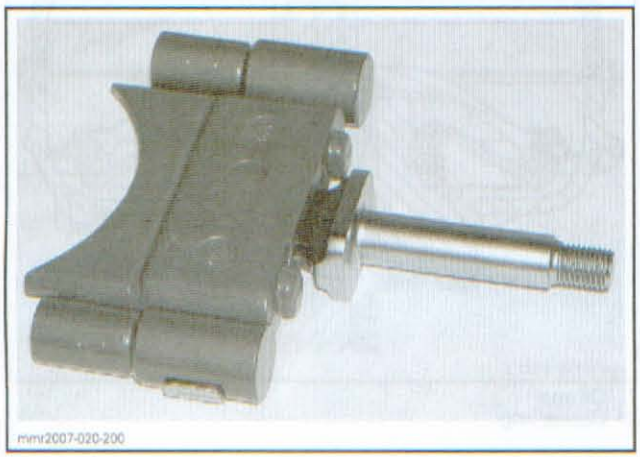

4. Insert valves together in cylinder. Install gasket.

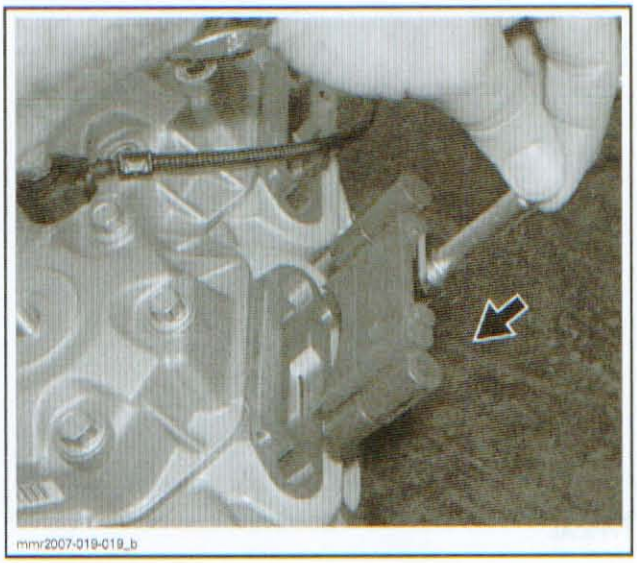

5. Align springs on stud ends of valves.

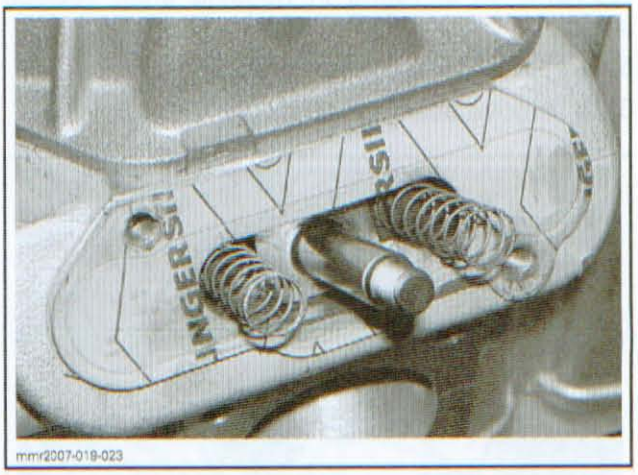

6. Apply MOLYKOTE G-N (P/N 420 297 433) to valve shaft and on seals in housing.

7. Install housing and carefully align springs on stud ends of housing.

www.midwestmanuals.com

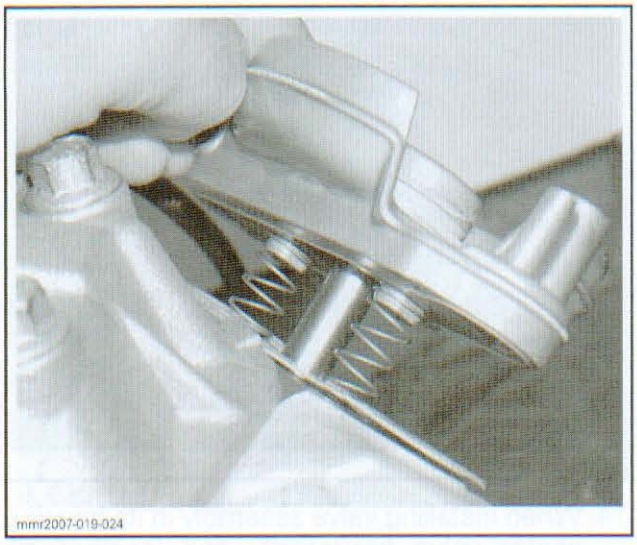

8. Install lower spring on bellow.
9. Apply DREI BOND SEALING COMPOUND (P/N 420 297 906) on the bellow's lower rib, then install bellow and spring.



1. Apply Drei Bond here

10. Install compression spring then tighten valve piston.
11. Apply DREI BOND SEALING COMPOUND (P/N 420 297 906) on valve piston groove.



1. Apply Drei Bond here

12. Position bellow on valve piston then secure top spring as follows.
    12.1 Attach a locking tie to spring.

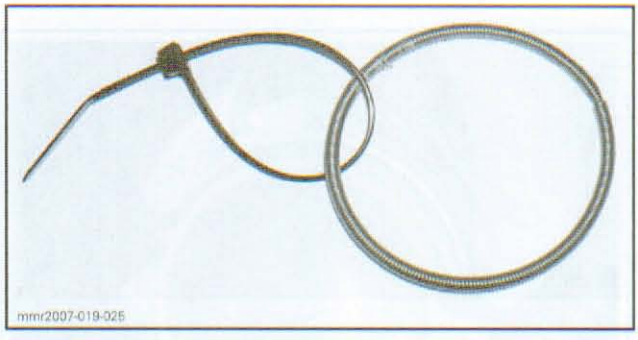

    12.2 Block valve piston with a suitable socket.

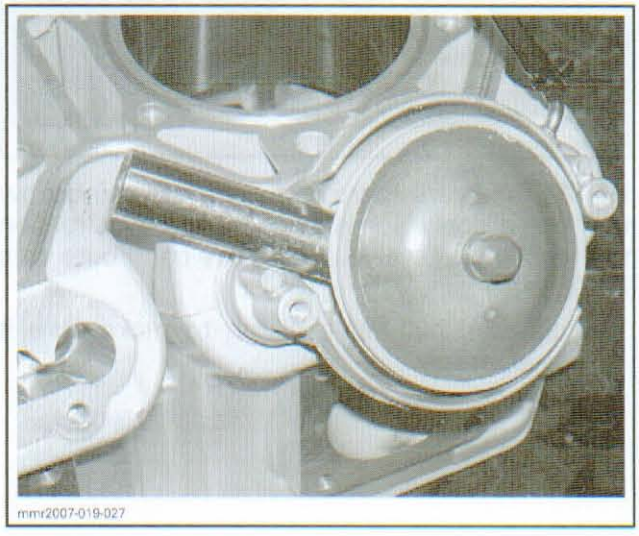

    12.3 Position joint of spring under your thumb.
    12.4 Hold spring with your thumb while sliding spring on the other side using the locking tie.

www.midwestmanuals.com

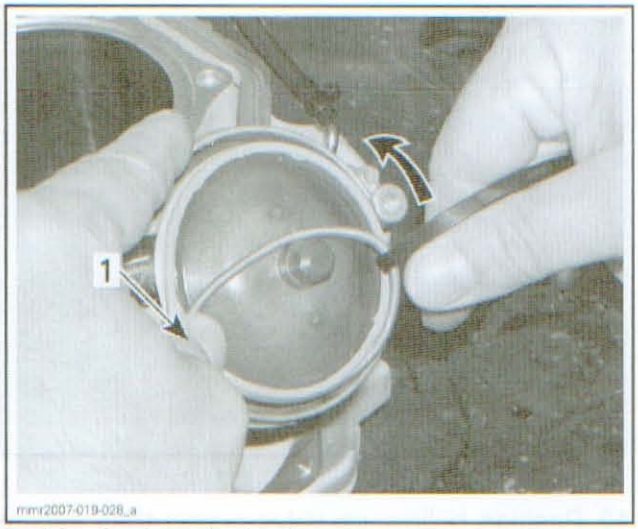

1. Joint of spring under thumb

12.5 Continue sliding locking tie all around the edge of valve piston.

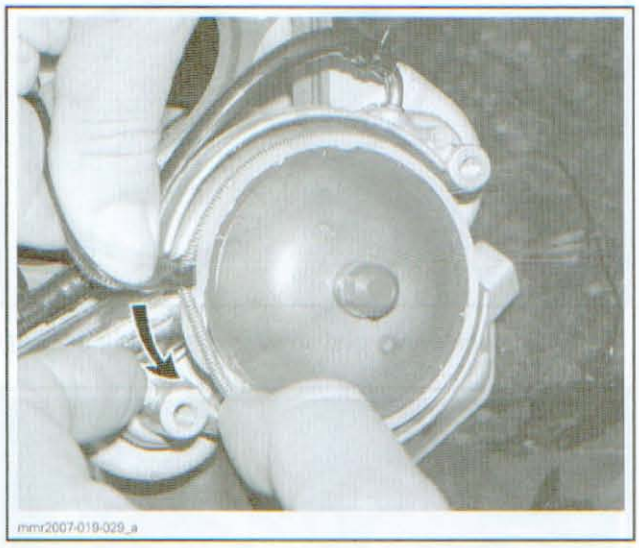

NOTE: Take care there is no strain in the bellow that could apply some bending force or torsion to the 3D RAVE valve. That may contribute to a RAVE valve jam.

13. Push and pull valve piston to make sure it moves freely.

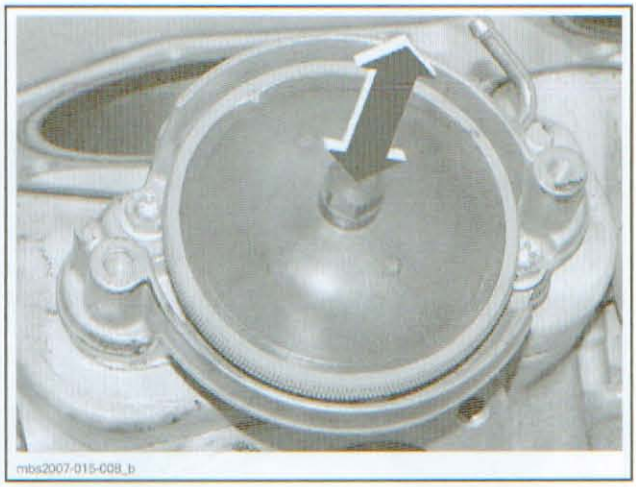

14. When installing valve assembly in its housing, center valve horizontally and longitudinally then hand tighten screws.

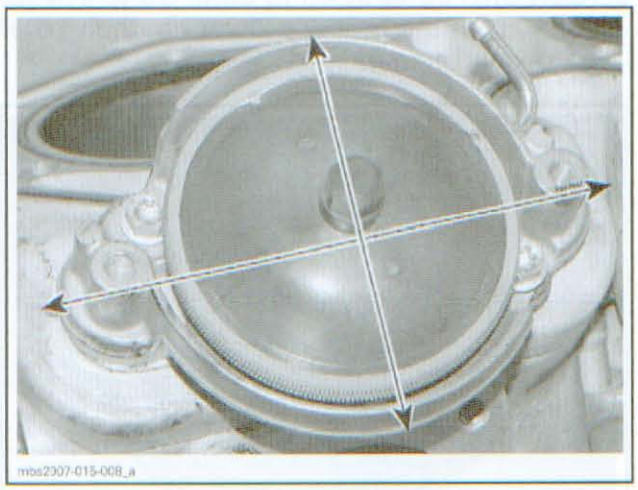

15. Tighten screws and check valve for free movement again. If some friction is felt, slightly loosen screws and readjust housing then retighten screws.
16. Repeat the process until a free movement is obtained.
17. Start engine and recheck RAVE system operation.
18. Reinstall remaining parts.

CHECK VALVES

Check Valve Leak Test

1. Disconnect check valve.
2. Install test pump as shown.
3. Pressurize check valve to 34 kPa (5 PSI).
4. Valve should stand pressure.

www.midwestmanuals.com

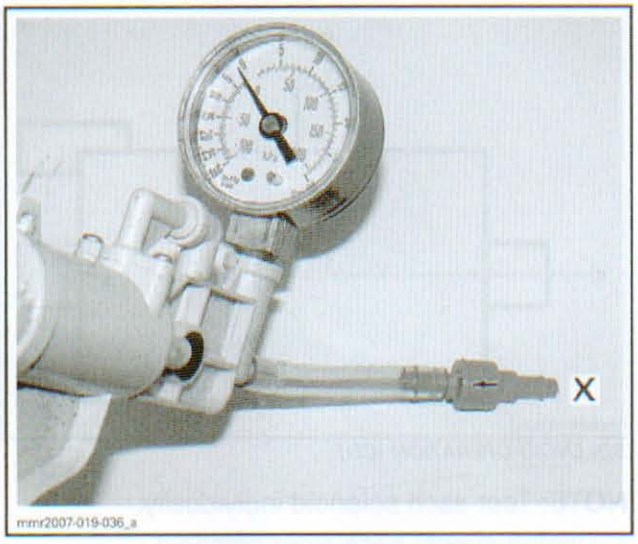

5. Install test pump in the opposite side.
6. Pressurize check valve.
7. Air should flow freely.

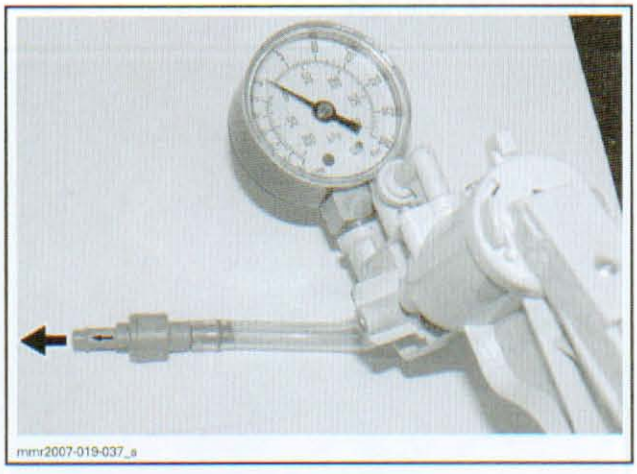

8. Replace valve if any test failed.

Check Valve Installation

Ensure to reinstall all check valves in the proper direction.

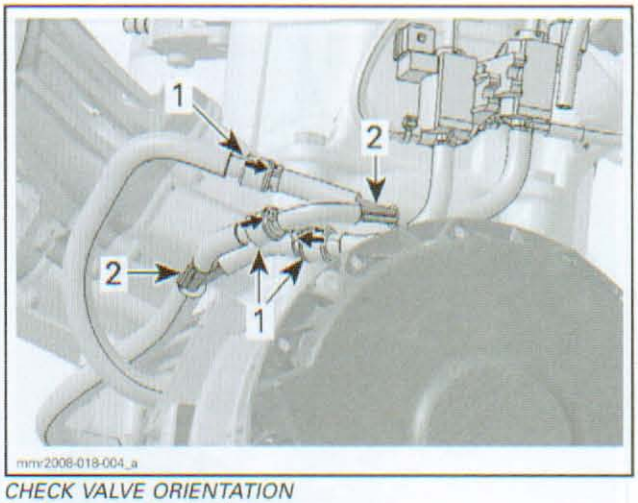

CHECK VALVE ORIENTATION
1. *Arrows on check valves*
2. *Arrows on Y-fittings*

SOLENOIDS

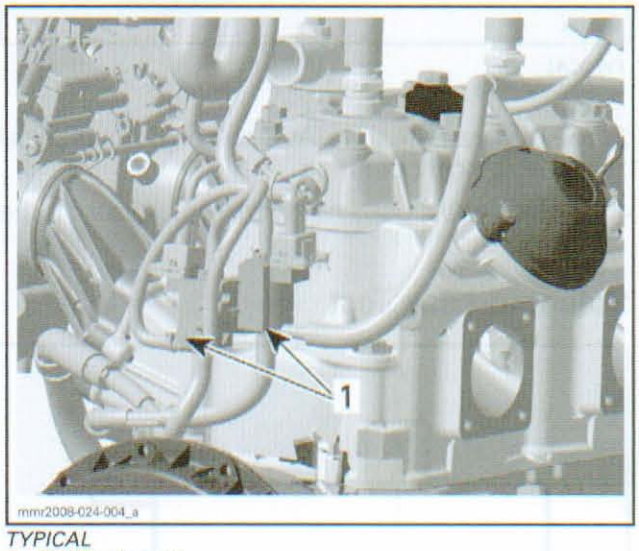

TYPICAL
1. *RAVE solenoids*

NOTE: First ensure the problem is not related with tubes connection and RAVE valves themselves.

Solenoid Test with B.U.D.S.

1. Refer to *COMMUNICATION TOOLS AND B.U.D.S. SOFTWARE* section for proper connection to vehicle.
2. Using B.U.D.S. software, energize **RAVE solenoids** from **Activation** tab.

www.midwestmanuals.com

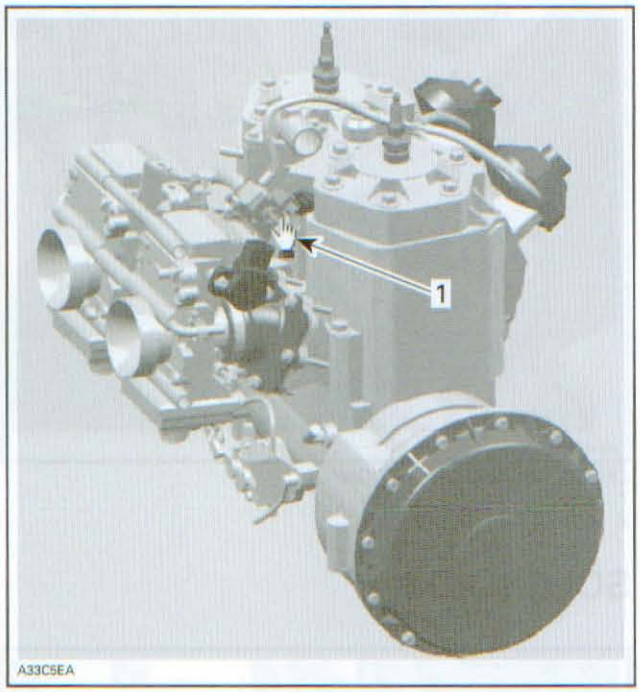

TYPICAL
1. Activate here

3. This will validate the RAVE solenoid mechanical and electrical operation.
4. If the solenoid does not work, proceed with the voltage test.

Solenoid Leak Test

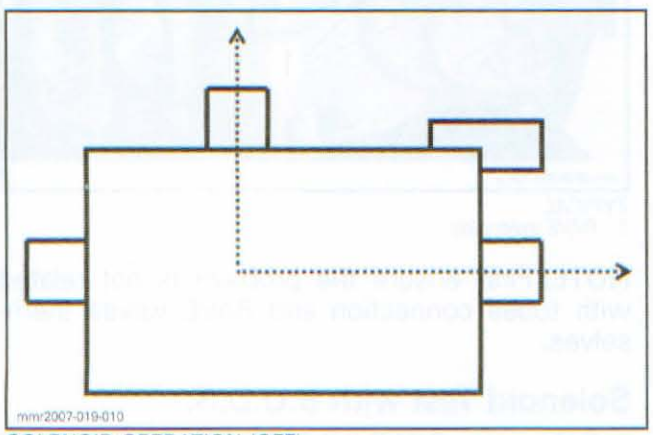

SOLENOID OPERATION (OFF)

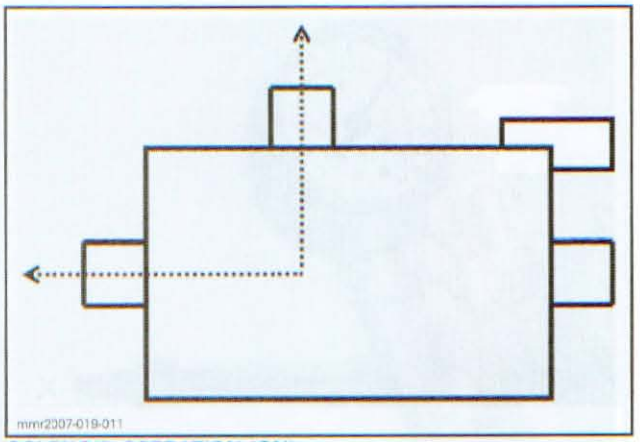

SOLENOID OPERATION (ON)

NOTE: Test each solenoid individually.

1. Unplug supply hose from solenoid.
2. Install test pump on solenoid nipple.
3. Supply 12 Vdc to solenoid terminals. Ensure to respect polarity.
4. Pressurize solenoid.

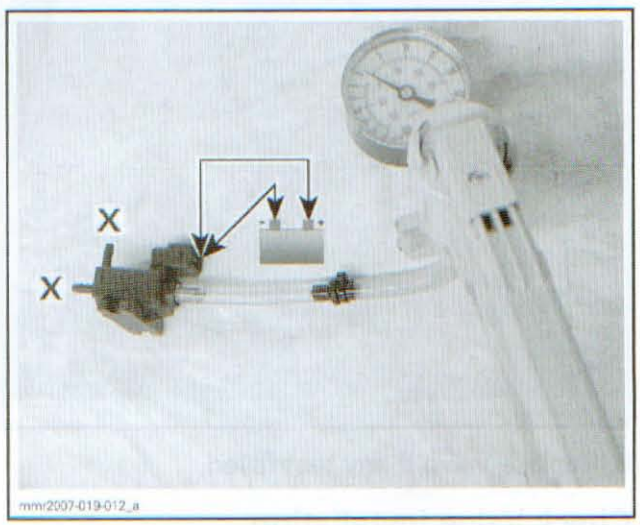

TEST PRESSURE
69 kPa to 103 kPa (10 PSI to 15 PSI)

5. Wait some time to see if pressure drops:
   - 5.1 If pressure does not build up or drops, replace solenoid.
   - 5.2 If pressure is maintained, continue testing.
6. Disconnect solenoid. Pressure should evacuate through upper nipple.

www.midwestmanuals.com

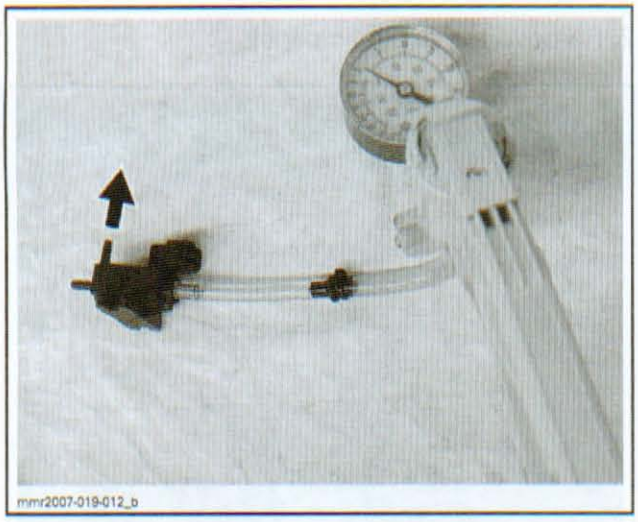
mmr2007-019-012_b

7. Unplug outlet hose from solenoid.
8. Install test pump on solenoid nipple. Pressurize to the same pressure as before.

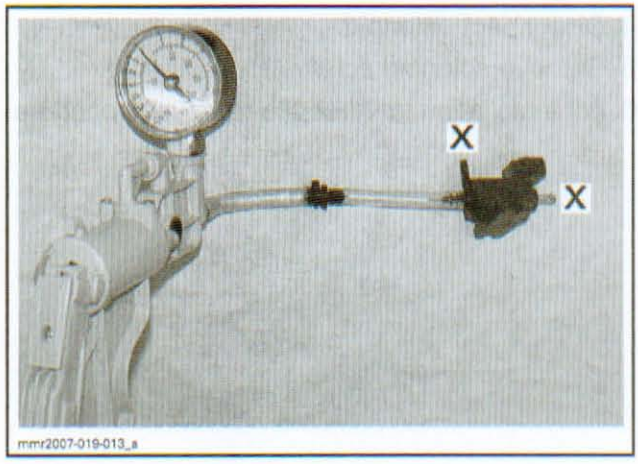

mmr2007-019-013_a

9. Wait some time to see if pressure drops:
   - 9.1 If pressure does not build up or drops, replace solenoid.
   - 9.2 If pressure is maintained, continue testing.
10. Supply 12 Vdc to solenoid terminals. Ensure to respect polarity.
11. Pressure should evacuate through upper nipple.

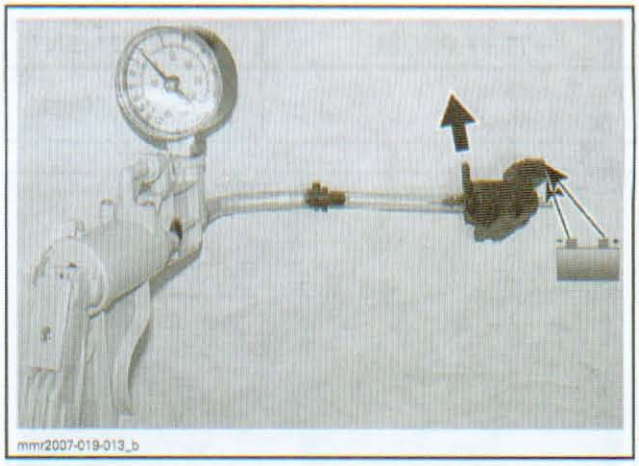
mmr2007-019-013_b

12. If any test failed, replace solenoid.

Solenoid Input Voltage Test

1. Remove muffler. Refer to *EXHAUST SYSTEM*.
2. Remove the acoustic panel.

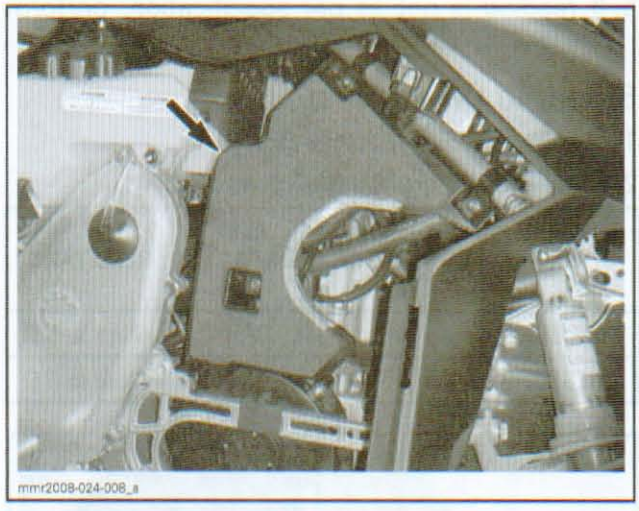
mmr2008-024-008_a

3. Disconnect the connector from the solenoid.

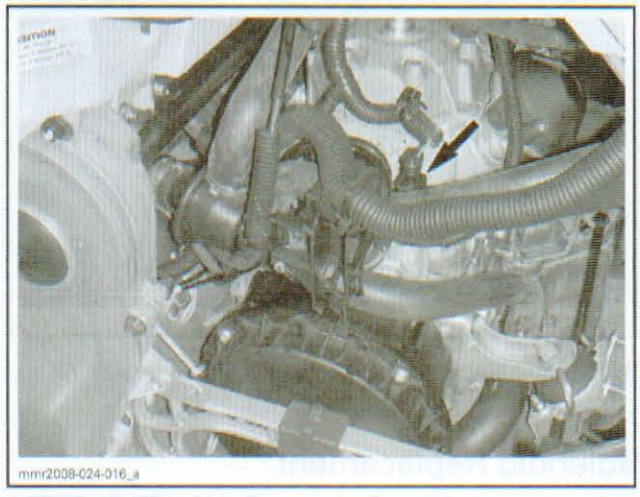
mmr2008-024-016_a

4. Measure voltage on connector as follows.

www.midwestmanuals.com

TEST PROBE		MEASUREMENT
Pin 2 (solenoid connector)	Engine ground	Battery voltage

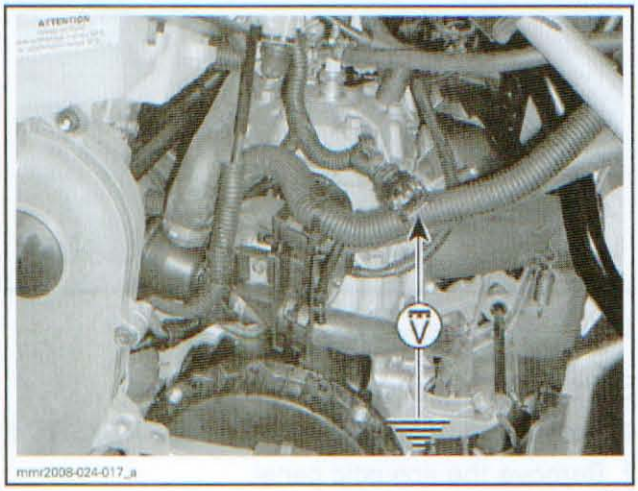

mmr2008-024-017_a

5. If reading is not as per specification, perform the *SOLENOID CIRCUIT TEST.*

Solenoid Circuit Test

1. Disconnect ECM connector.
2. Measure wiring resistance as follows.

SOLENOID	SOLENOID CONNECTOR PIN	ECM CONNECTOR PIN	RESISTANCE
VACUUM	1	DA-13	Close to 0 Ω
PRESSURE	1	DA-30	Close to 0 Ω

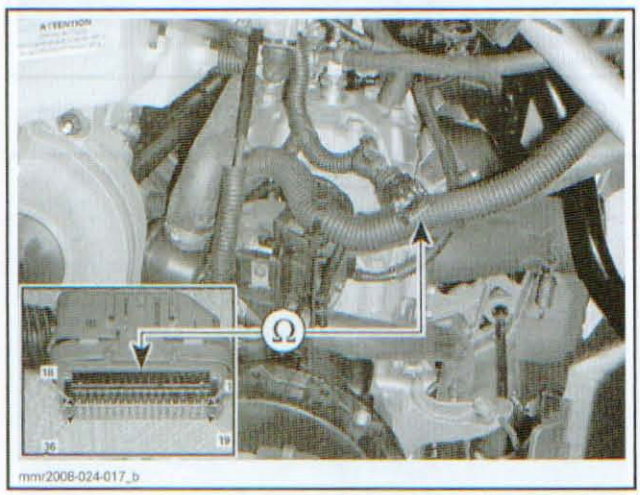

mmr2008-024-017_b

3. If the solenoid circuit test failed, repair or replace wiring and connectors.

Solenoid Replacement

1. Remove muffler. Refer to *EXHAUST SYSTEM.*
2. Remove the acoustic panel.

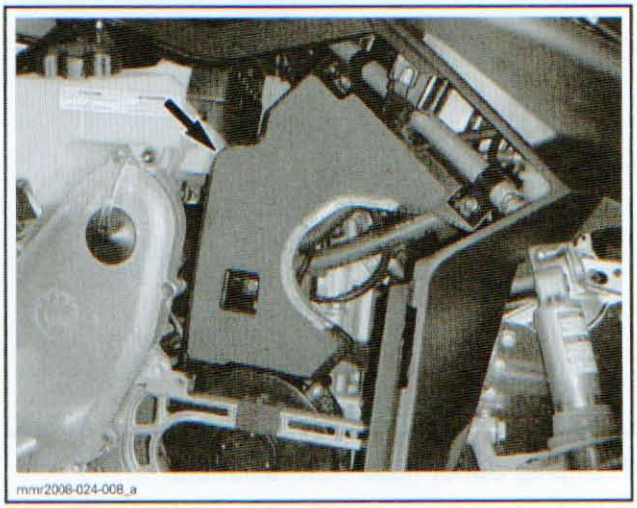
mmr2008-024-008_a

3. Mark hose locations of RAVE solenoid then unplug them.
4. Disconnect solenoid.
5. Remove solenoid screws and solenoid.
6. For installation, reverse the removal procedure.

www.midwestmanuals.com

TOP END (593)

SERVICE TOOLS

Description	Part Number	Page
PISTON CIRCLIP INSTALLER	529 035 686	154
RUBBER PAD	529 023 400	154

SERVICE PRODUCTS

Description	Part Number	Page
LOCTITE 243 (BLUE)	293 800 060	151
LOCTITE CHISEL (GASKET REMOVER)	413 708 500	150

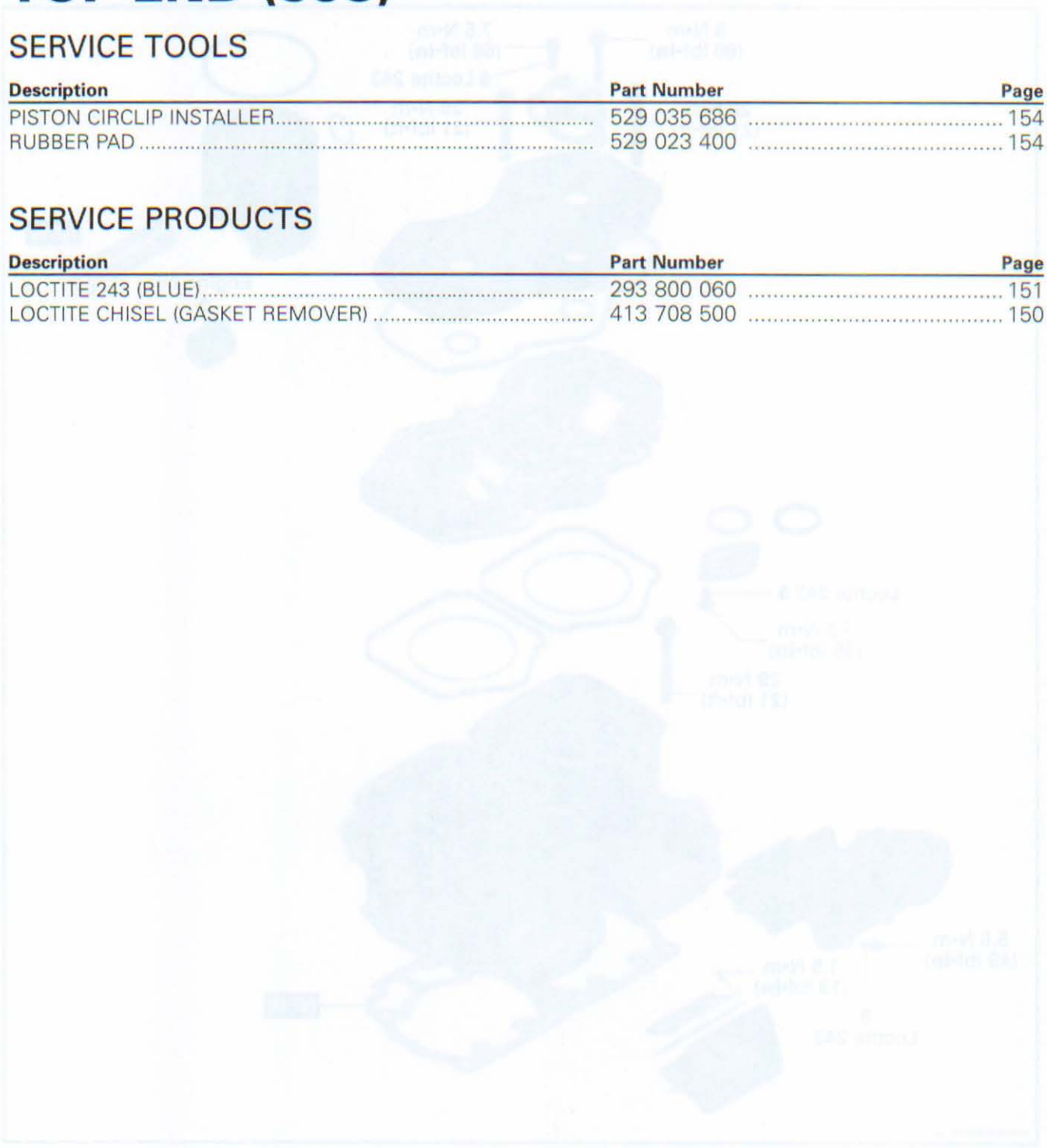

www.midwestmanuals.com

500SS/600

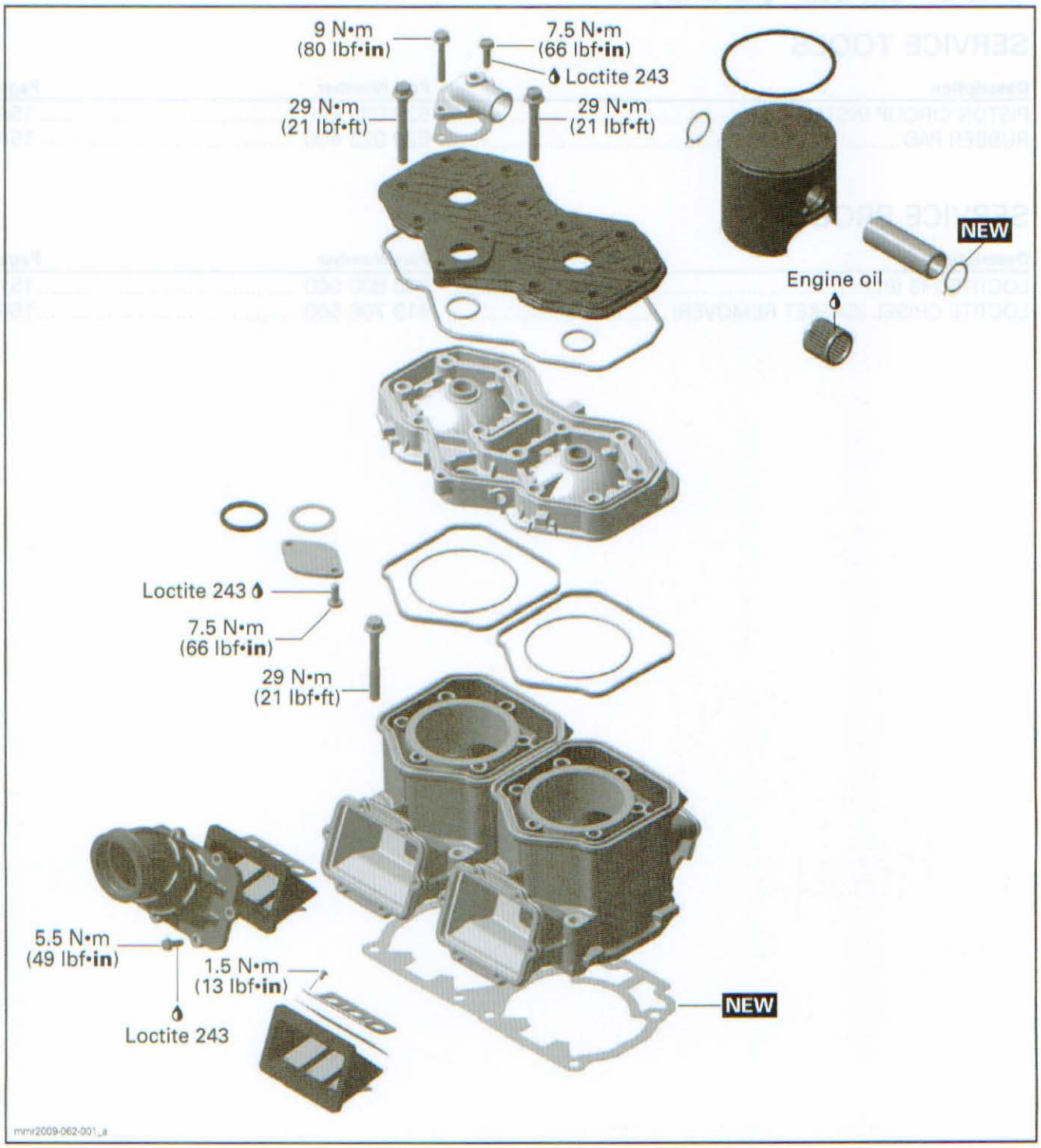

www.midwestmanuals.com

600 HO E-TEC

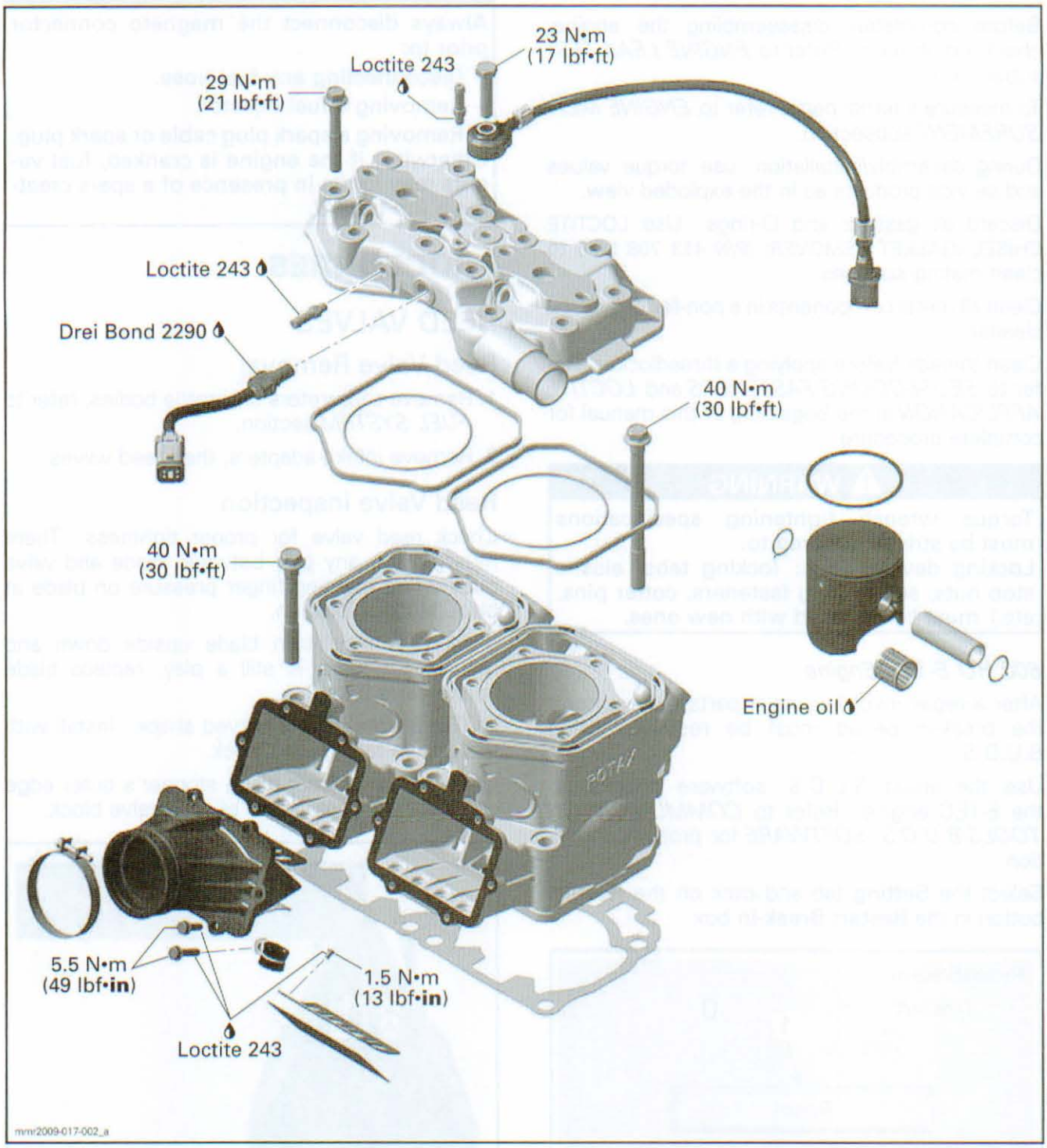

www.midwestmanuals.com

GENERAL

Before completely disassembling the engine, check airtightness. Refer to *ENGINE LEAK TEST* subsection.

To measure internal parts, refer to *ENGINE MEASUREMENT* subsection.

During assembly/installation, use torque values and service products as in the exploded view.

Discard all gaskets and O-rings. Use LOCTITE CHISEL (GASKET REMOVER) (P/N 413 708 500) to clean mating surfaces.

Clean all metal components in a non-ferrous metal cleaner.

Clean threads before applying a threadlocker. Refer to *SELF-LOCKING FASTENERS* and *LOCTITE APPLICATION* at the beginning of this manual for complete procedure.

⚠ WARNING

Torque wrench tightening specifications must be strictly adhered to.
Locking devices (e.g.: locking tabs, elastic stop nuts, self-locking fasteners, cotter pins, etc.) must be replaced with new ones.

600 HO E-TEC Engine

After a repair involving major parts replacement, the break-in period must be restarted using B.U.D.S.

Use the latest B.U.D.S. software specific to the E-TEC engine. Refer to *COMMUNICATION TOOLS/B.U.D.S. SOFTWARE* for proper connection.

Select the **Setting** tab and click on the **Restart** button in the **Restart Break-in** box.

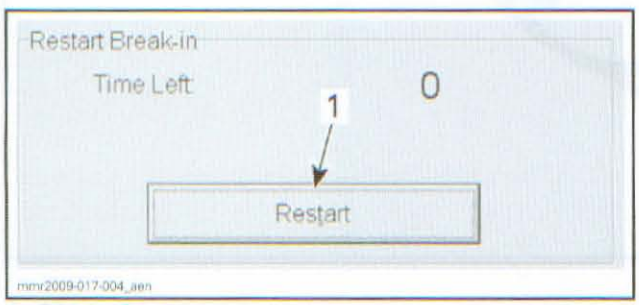

1. Click on Restart

⚠ WARNING

Always disconnect the magneto connector prior to:
– Disconnecting any fuel hose.
– Removing a fuel injector.
– Removing a spark plug cable or spark plug.
Otherwise, if the engine is cranked, fuel vapors may ignite in presence of a spark creating a fire hazard.

PROCEDURES

REED VALVES

Reed Valve Removal

1. Remove carburetors or throttle bodies, refer to *FUEL SYSTEM* section.
2. Remove intake adapters, then reed valves.

Reed Valve Inspection

Check reed valve for proper tightness. There must not be any play between blade and valve body when exerting finger pressure on blade at blade stopper location.

If there is play, turn blade upside down and recheck. If there is still a play, replace blade and/or valve body.

NOTE: Blades have a curved shape. Install with their curve facing reed block.

Check distance from blade stopper's outer edge and distance from center of reed valve block.

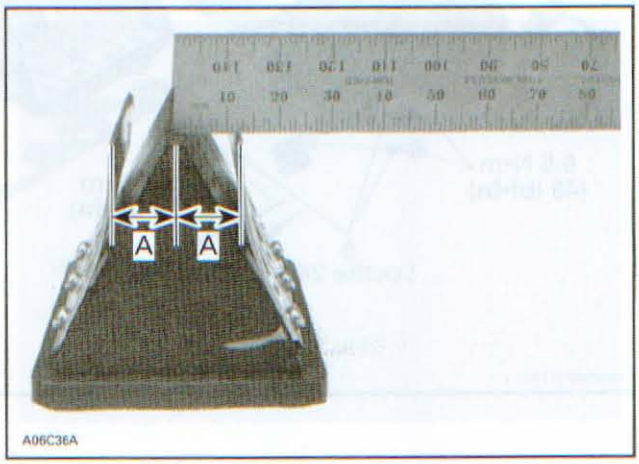

TYPICAL
A. 500SS engine: 14.75 - 0, + 0.75 mm (.580 - 0, + .030 in)
600 HO E-TEC engine: 17.5 - 0, + 0.75 mm (.689 - 0, + .030 in)

Bend the blade stopper as required to obtain the proper distance.

www.midwestmanuals.com

Reed Valve Installation

The installation is the reverse of the removal procedure.

NOTE: Blade stoppers may slightly interfere with cylinder during installation. Adjusted distance will be reduced automatically upon installation.

CYLINDER HEAD COVER (500SS/600)

Cylinder Head Cover Removal

1. Remove LH side cover.
2. Remove tool kit support and drive belt guard.
3. Drain coolant, refer to *COOLING SYSTEM*.
4. Disconnect spark plugs cables and remove spark plugs.
5. Unplug coolant hoses from upper coolant socket.
6. Unscrew all cylinder head cover screws and the rear upper coolant socket screw, then remove cylinder head cover.

Cylinder Head Cover Inspection

Check cylinder head cover for cracks, warping or other damages. Replace if necessary.

Cylinder Head Cover Installation

1. Torque screws to 29 N•m (21 lbf•ft) in the following illustrated sequence.

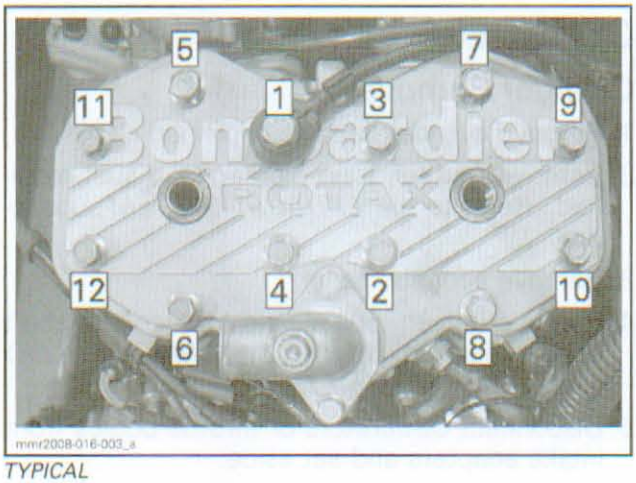

TYPICAL

2. Apply LOCTITE 243 (BLUE) (P/N 293 800 060) on the upper socket screw threads. Position the longer screw outwards (rear of engine).

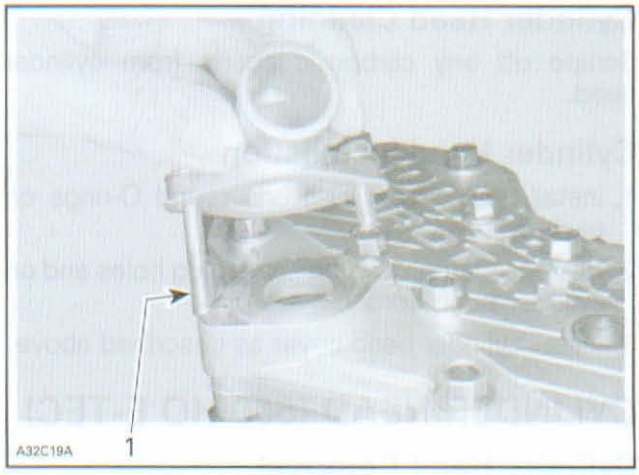

TYPICAL
1. Longer screw

3. Install other removed components.
4. Refill cooling system, refer to *COOLING SYSTEM* section.

CYLINDER HEAD (500SS/600)

Cylinder Head Removal

1. Remove the cylinder head cover as explained above.
2. Disconnect the temperature sensor connector.
3. Disconnect the carburetor or throttle body heater inlet hose at cylinder head.
4. Remove the cylinder head.

Cylinder Head Inspection

Check cylinder head for cracks, warp or other damages. Replace if necessary.

Refer to tables below to find cylinder head specifications. For dimension measurement procedures, refer to the *ENGINE MEASUREMENT* subsection.

Combustion Chamber volume

ENGINE	VOLUME
500SS/600	27.5 to 28.4 cc

Cylinder Head Warpage

ENGINE	MAXIMUM
500SS/600	0.5 mm (.02 in) for total length of cylinder head

www.midwestmanuals.com

Cylinder Head Cleaning

Scrape off any carbon deposits from cylinder head.

Cylinder Head Installation

1. Install new rubber ring and round O-rings on each cylinder.
2. Replace O-rings around spark plug holes and on cylinder head border.
3. Install cylinder head cover as described above.

CYLINDER HEAD (600 HO E-TEC)

Cylinder Head Removal

1. Remove LH side cover.
2. Remove tool kit support and drive belt guard.
3. Drain coolant, refer to *COOLING SYSTEM* section.
4. Refer to *FUEL SYSTEM* section and:
   - Release fuel pressure
   - Disconnect fuel lines.
5. Disconnect injectors electrical connectors.
6. Disconnect spark plugs cables.
7. Remove the knock sensor.
8. Disconnect the temperature sensor connector.
9. Unplug coolant hoses.
10. Disconnect the throttle body heater inlet hose at cylinder head.
11. Unscrew all cylinder head screws, then remove cylinder head.

Cylinder Head Inspection

Check cylinder head for cracks, warp or other damages. Replace if necessary.

Refer to tables below to find cylinder head specifications. For dimension measurement procedures, refer to the *ENGINE MEASUREMENT* subsection.

Combustion Chamber volume

ENGINE	VOLUME
600 HO E-TEC	25.3 to 27.6 cc

Cylinder Head Warpage

ENGINE	MAXIMUM
600 HO E-TEC	0.5 mm (.02 in) for total length of cylinder head

Cylinder Head Cleaning

Scrape off any carbon deposits from cylinder head.

Cylinder Head Installation

1. Install new rubber ring and round O-rings on each cylinder.
2. Torque cylinder head screws following the illustrated sequence.

CYLINDER HEAD SCREWS TORQUE	
FIRST STEP	15 N•m (133 lbf•**in**)
SECOND STEP	29 N•m (21 lbf•ft)

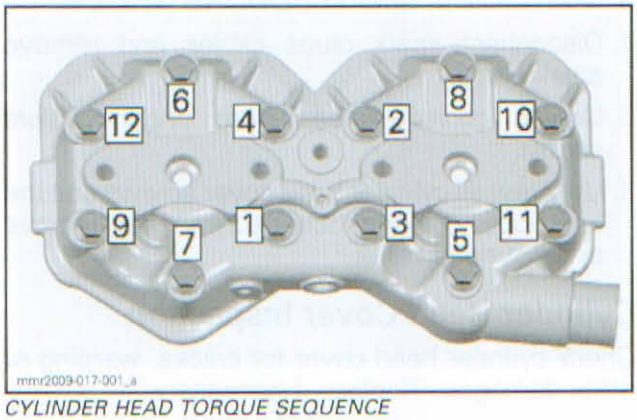

CYLINDER HEAD TORQUE SEQUENCE

3. Install other removed components.
4. Refill cooling system, refer to *COOLING SYSTEM* section.

CYLINDERS

Cylinder Removal

1. Remove cylinder head as explained above.
2. Remove muffler, tune pipe and exhaust manifold. Refer to the *EXHAUST SYSTEM* subsection.
3. Remove acoustic panel.
4. Remove driven pulley and the countershaft bearing support, refer to the *DRIVEN PULLEY AND COUNTERSHAFT* subsection.
5. Disconnect carburetors or throttle bodies from intake adapters and set aside.

600 HO E-TEC

6. Remove RAVE valves cover.
7. Remove RAVE valves link bar. Hold RAVE pistons with a wrench and remove the retaining nuts.

www.midwestmanuals.com

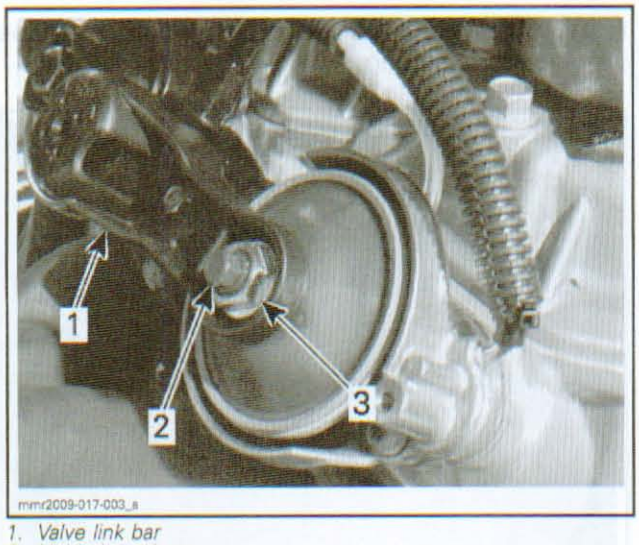

1. *Valve link bar*
2. *Hold piston here*
3. *Retaining nut*

8. Disconnect RAVE valves oil lines and vacuum/pressure hoses.

All Models

9. Unscrew cylinder screws and then remove the cylinder(s).

Cylinder Inspection

Check cylinders for cracks and scoring on the top and bottom of cylinders. Replace if necessary.

Refer to tables below to find cylinder specifications. For dimension measurement procedures, refer to *ENGINE MEASUREMENT*.

Cylinder Taper

ENGINE	MAXIMUM
All 593	0.10 mm (.004 in)

Cylinder Out of Round

ENGINE	MAXIMUM
All 593	0.08 mm (.003 in)

Cylinder Cleaning

Scrape off any carbon deposits from cylinder exhaust port.

Cylinder Installation

Install new base gasket of the same thickness as the old one.

Identify gasket thickness using the identification holes on the gasket surface.

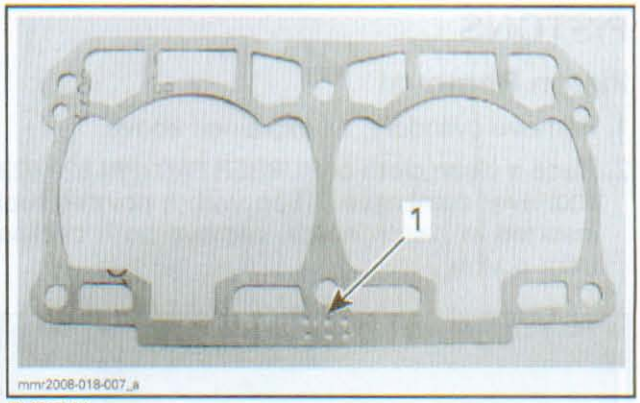

TYPICAL
1. *Identification holes*

NOTE: The general procedure is to install a new gasket of the same thickness. However if you do not know the thickness of the gasket that was on the engine or if a crankcase and/or crankshaft repair was involved, measure the combustion chamber volume to choose the right gasket. Refer to the *ENGINE MEASUREMENT* subsection for procedure and *CYLINDER HEAD INSPECTION* in this subsection for specification.

NOTICE **Always install a gasket of the proper thickness. Failure to do so may cause detonation and severe engine damage.**

1. Lubricate cylinder wall with new injection oil or equivalent.
2. Install cylinders. Do not tighten.
3. Install new rubber ring and round O-rings on each cylinder.

NOTE: Carefully clean screws before reinstallation, specifically under screw head.

4. Install exhaust manifold with gaskets. Tighten screws just enough to obtain a snug contact between the cylinders and the manifold. Do not torque screws yet.
5. Torque cylinder screws in a crosswise sequence as per the following table.

M8	29 N•m (21 lbf•ft)
M10	40 N•m (30 lbf•ft)

6. Torque exhaust manifold screws to specification, refer to *EXHAUST SYSTEM* subsection.
7. On 593 E-TEC engines, refer to the *3D RAVE* subsection and install 3D RAVE link bar. The procedure must be strictly adhered to.
8. Install all other removed parts.

www.midwestmanuals.com

PISTONS

Piston Removal

1. Remove cylinders, as explained above.
2. Place a clean cloth or RUBBER PAD (P/N 529 023 400) over crankcase. Then with a pointed tool inserted in piston notch, remove both circlips from piston.

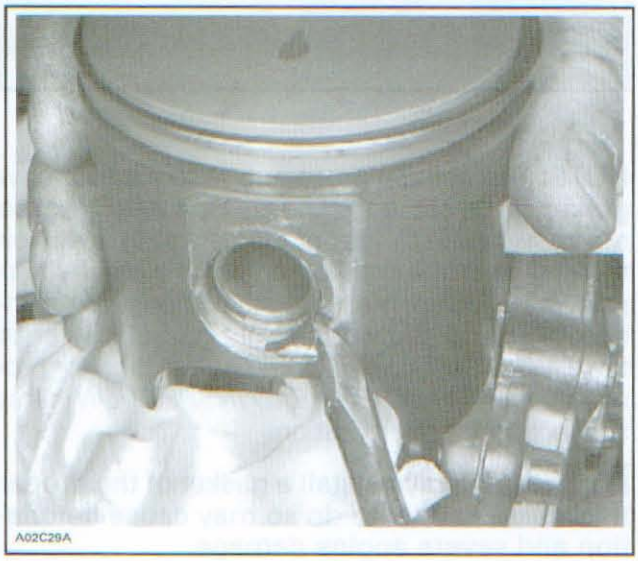

TYPICAL

3. Push piston pin out of piston.
4. Remove piston.
5. Remove bearing.

Piston Inspection

Inspect piston for scoring, cracking or other damage.

Refer to table below to find piston specifications. For dimension measurement procedures, refer to *ENGINE MEASUREMENT*.

MEASUREMENT		MAXIMUM
Ring/piston groove clearance	All 593	0.20 mm (.0079 in)
Ring end gap	All 593	1.0 mm (.039 in)
Piston/cylinder clearance	500SS/600	0.18 mm (.0071 in)
	600 HO E-TEC	0.20 mm (.008 in)

Piston Cleaning

Scrape off any carbon deposits from piston dome.

NOTE: The arrow on the piston dome must be visible after cleaning.

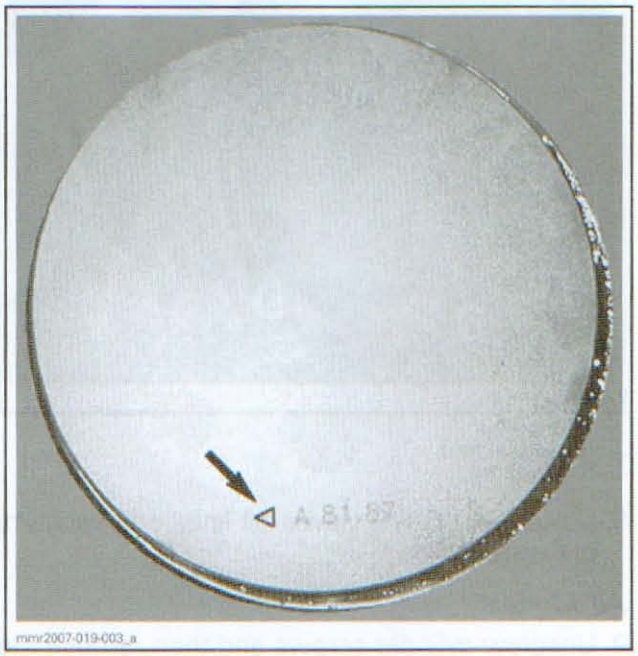

Clean the piston ring groove with a groove cleaner tool or with a piece of broken ring.

Piston Installation

1. Lubricate needle bearing with injection oil.
2. Insert bearing into connecting rod.
3. Place the piston over the connecting rod with the letters "AUS" (over an arrow on the piston dome) facing down to the exhaust port.

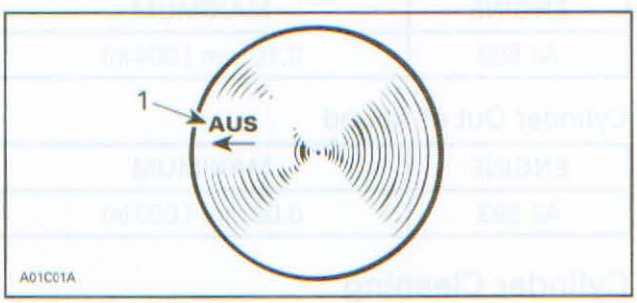

1. Exhaust

4. Push piston pin trough piston.

NOTICE **Always install new circlips.**

5. Use appropriate piston circlip installer to install mono-hook circlips.

ENGINE	TOOL
All 593	PISTON CIRCLIP INSTALLER (P/N 529 035 686)

www.midwestmanuals.com

6. Insert circlip into support so that, when installed in piston groove, the gap will be below the tab (see piston picture below).



7. With round end of pusher, position circlip perpendicular to the support axis.

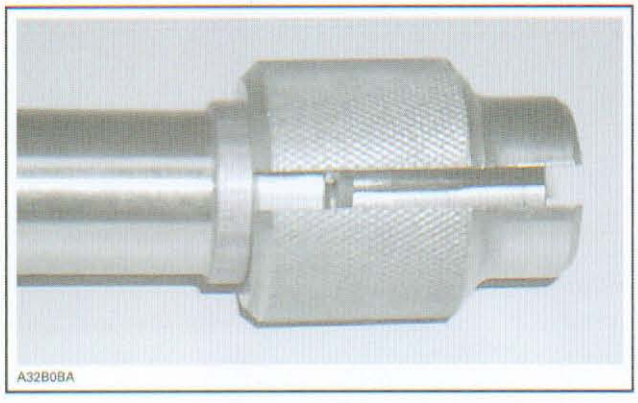

8. With the other end of the pusher, push circlip into the support groove.

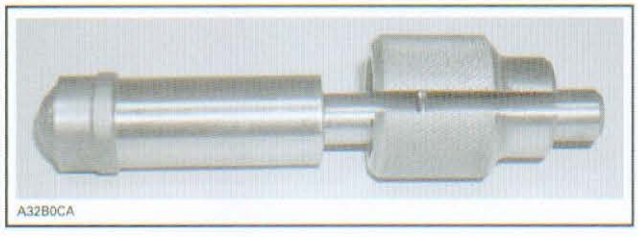

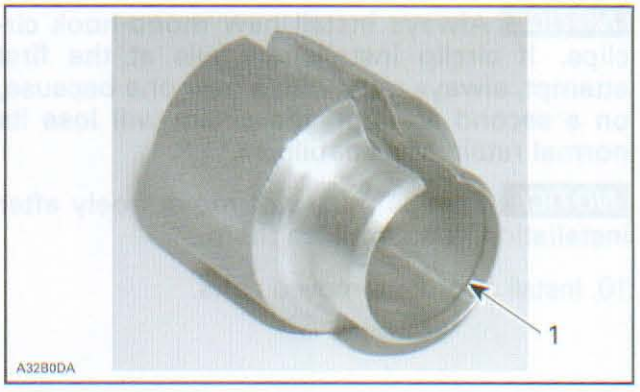

1. Groove



CIRCLIP READY TO BE INSTALLED ON PISTON

9. Using a plastic hammer, tap pusher to put circlip in place.

NOTE: Make sure to install new circlips with the gap below the tab exactly as shown on the following photo.

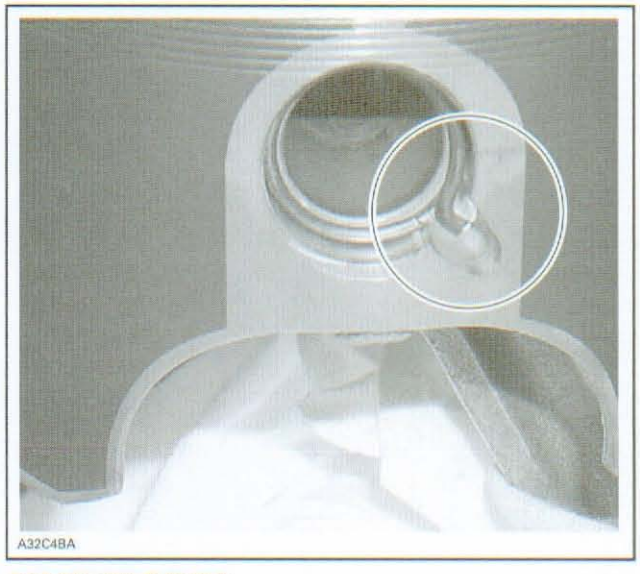

GAP BELOW THE TAB

www.midwestmanuals.com

NOTICE Always install new mono-hook circlips. If circlip installation fails at the first attempt, always retry with a new one because, on a second attempt, the circlip will lose its normal retaining capabilities.

NOTICE Circlips must not move freely after installation; if so, replace them.

10. Install all other removed parts.

www.midwestmanuals.com

TOP END (797)

SERVICE TOOLS

Description	Part Number	Page
PISTON CIRCLIP INSTALLER	529 036 138	161
RUBBER PAD	529 023 400	160

SERVICE PRODUCTS

Description	Part Number	Page
LOCTITE CHISEL (GASKET REMOVER)	413 708 500	159

Midwest Manuals
sales@midwestmanuals.com
www.midwestmanuals.com

www.midwestmanuals.com

800R

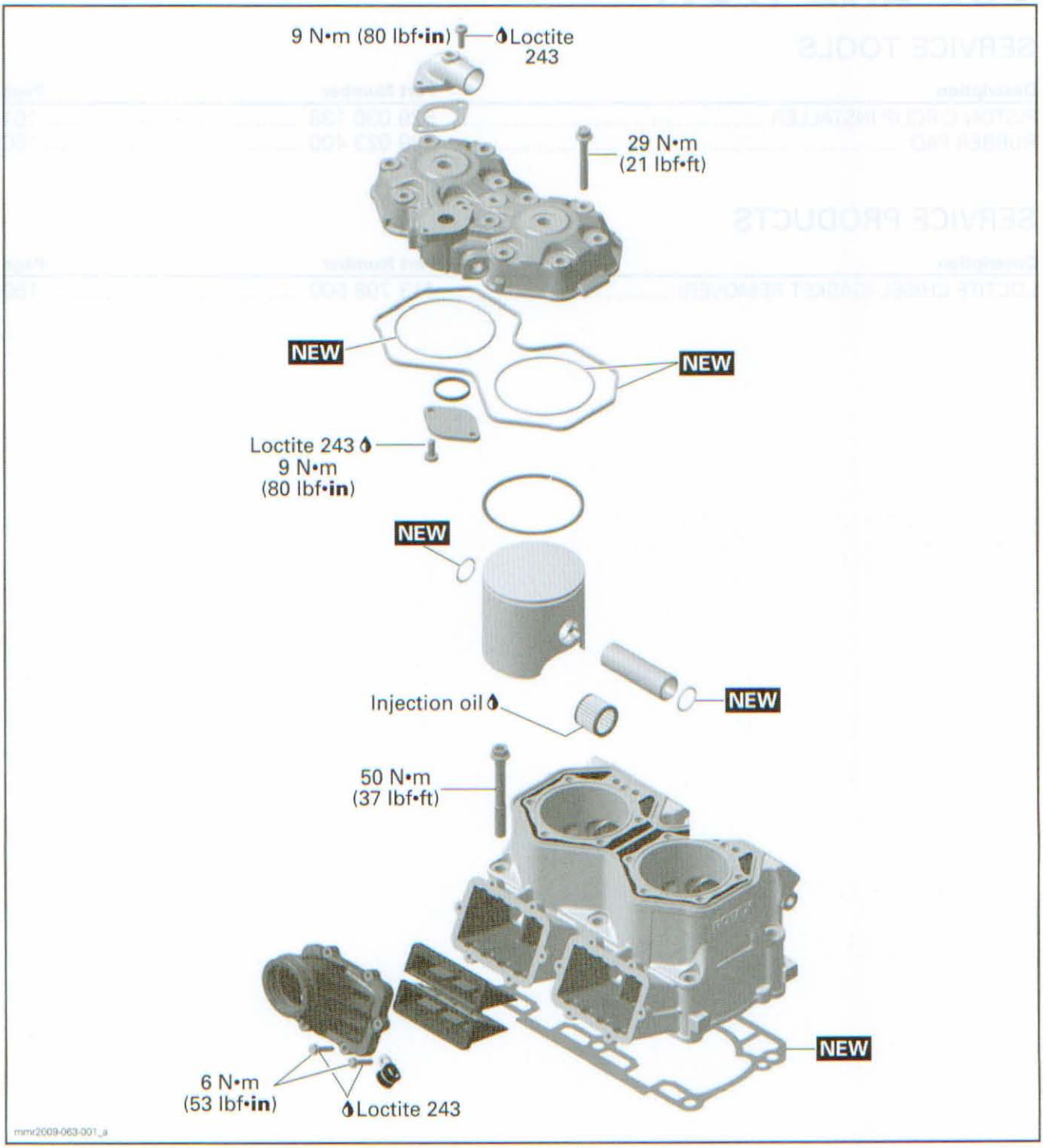

www.midwestmanuals.com

GENERAL

Before completely disassembling the engine, check airtightness. Refer to *ENGINE LEAK TEST* section.

Discard all gaskets and O-rings. Use LOCTITE CHISEL (GASKET REMOVER) (P/N 413 708 500) to clean mating surfaces.

Clean all metal components in a non-ferrous metal cleaner.

To measure internal parts, refer to *ENGINE MEASUREMENT* section.

During assembly or installation:

- Hoses, cables and locking tie removed must be reinstalled at the same place.
- Use torque values and service products as in the exploded view.
- Clean threads before applying a threadlocker. Refer to the *INTRODUCTION* at the beginning of this manual for complete procedure.

⚠ WARNING

Torque wrench tightening specifications must be strictly adhered to.
Locking devices (e.g.: locking tabs, elastic stop nuts, self-locking fasteners, cotter pins, etc.) must be replaced with new ones.

After a repair involving major parts replacement, a break-in period must be observed.

To assure additional protection during the engine break-in, 500 ml (17 U.S. oz) of recommended injection oil should be added to a full fuel tank.

NOTICE Always observe a break-in period as described in the *OPERATOR'S GUIDE*.

PROCEDURES

REED VALVES

Reed Valve Removal

1. Remove carburetors, refer to *FUEL SYSTEM* section.
2. Unscrew screws retaining intake adapters then remove reed valves.

Reed Valve Inspection

1. Check reed valve for proper tightness. There must not be any play between blade and valve body when exerting a finger pressure on blade at blade stopper location.
2. In case of a play, turn blade upside down and recheck. If there is still a play, replace blade and/or valve body.

NOTE: Blades have a curved shape. Install with their curve facing reed block.

Reed Valve Installation

The installation is the reverse of the removal procedure. Pay attention to the following.

1. Ensure to position reed valves so that they rest flat in intake opening.

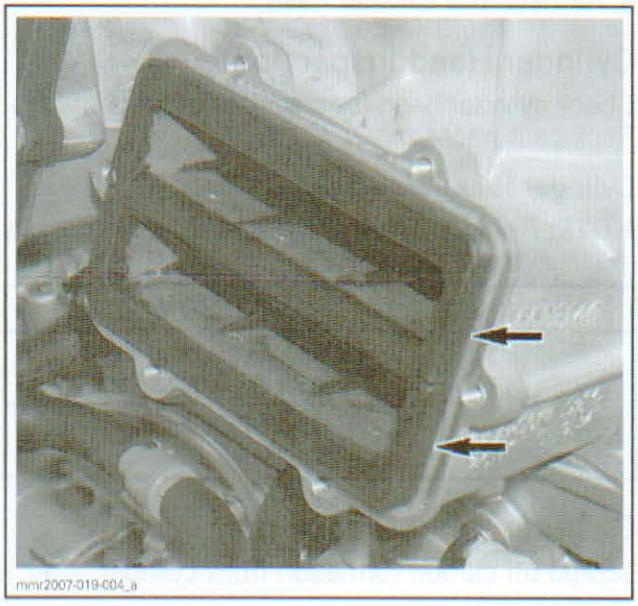

2. Ensure to position intake adapter as shown.

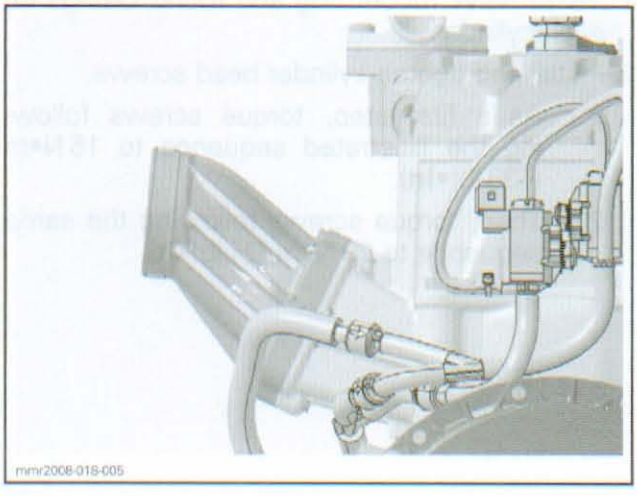

CYLINDER HEAD

Cylinder Head Removal

1. Remove *DRIVE BELT GUARD*. Refer to *DRIVE BELT* section.

www.midwestmanuals.com

2. Drain coolant, refer to *COOLING SYSTEM* section.
3. Remove spark plugs.
4. Remove the knock sensor.
5. Disconnect the temperature sensor connector.
6. Unplug coolant hoses from upper coolant socket.
7. Unplug carburetor heater inlet hose from cylinder head.
8. Unscrew all cylinder head screws.
9. Remove the cylinder head.

Cylinder Head Inspection

Check cylinder head for cracks or other damages. Replace if necessary.

Cylinder Head Warpage

NOTE: Refer to *ENGINE MEASUREMENT* for the measurement procedures.

ENGINE	MAXIMUM
797	0.05 mm (.002 in) per 50 mm (2 in) of surface
	0.5 mm (.02 in) for total length of cylinder head

Cylinder Head Cleaning

Scrape off carbon formation from cylinder head.

Cylinder Head Installation

1. Install **NEW** rubber ring and round O-rings on each cylinder.
2. Install and tighten cylinder head screws.
   2.1 As a first step, torque screws following the illustrated sequence to 15 N•m (133 lbf•**in**).
   2.2 Then, torque screws following the same sequence to 29 N•m (21 lbf•ft).

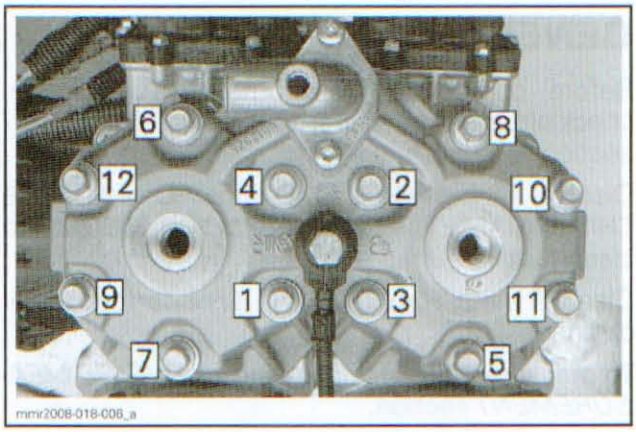

3. Reinstall knock sensor. Refer to *IGNITION SYSTEM* section.
4. Reinstall all other removed parts.

PISTONS

Piston Removal

1. Remove *CYLINDER BLOCK*, as explained below.
2. Place a clean cloth or the RUBBER PAD (P/N 529 023 400) over crankcase.

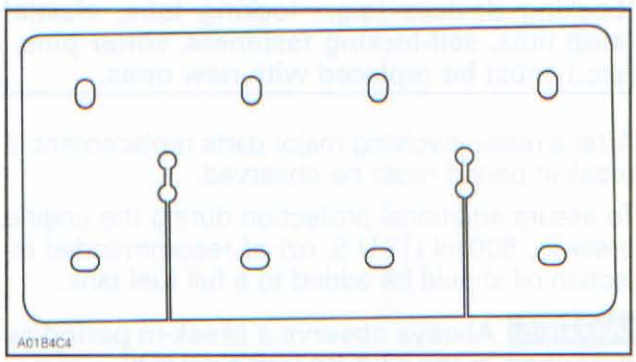

3. Using a pointed tool inserted in piston notch, remove one circlip from piston. Discard circlip.

www.midwestmanuals.com

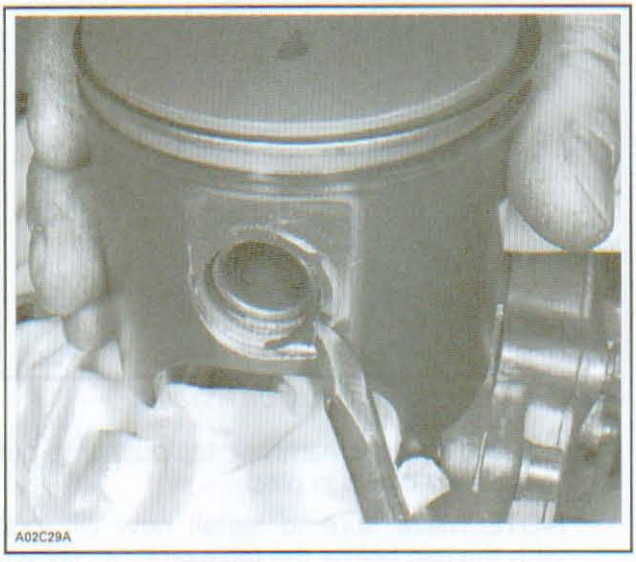

TYPICAL

4. Push piston pin out of piston.
5. Remove piston.
6. Remove bearing.

Piston Inspection

For dimension measurement procedures, refer to *ENGINE MEASUREMENT* section.

Piston Cleaning

1. Scrape off carbon formation from piston dome.

NOTE: The arrow on the piston dome must be visible after cleaning.



2. Clean the piston ring groove with a groove cleaner tool or with a piece of broken ring.

Piston Installation

1. Lubricate needle bearing with injection oil.
2. Insert bearing into connecting rod.
3. At assembly, place the pistons over the connecting rods with the arrow on the piston dome facing towards the exhaust port.



EXHAUST DIRECTION INDICATION

4. Install piston pin in piston.
5. Install a **NEW** circlip (two with a new piston) using the PISTON CIRCLIP INSTALLER (P/N 529 036 138).

NOTICE **Always install NEW mono-hook circlip(s). If circlip installation fails at the first attempt, always retry with a new one.**

6. Use the following procedure to use the piston circlip installer correctly.
   6.1 Insert circlip into support so that, when installed in piston groove, the gap will be below the tab (see piston picture below).

www.midwestmanuals.com



6.2 With round end of pusher, position circlip perpendicularly to the support axis.

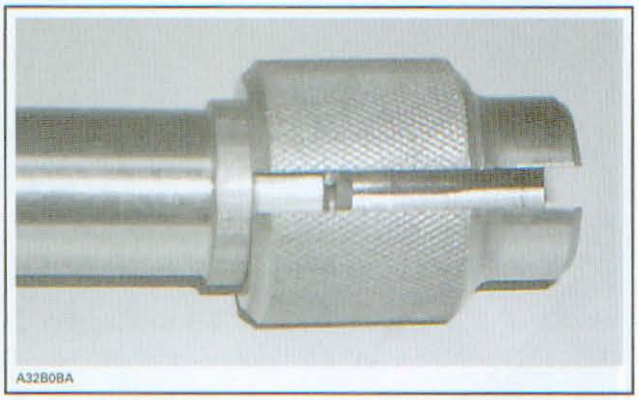

6.3 With the other end of the pusher, push circlip into the support groove.

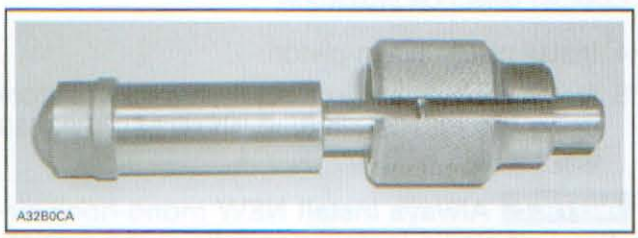

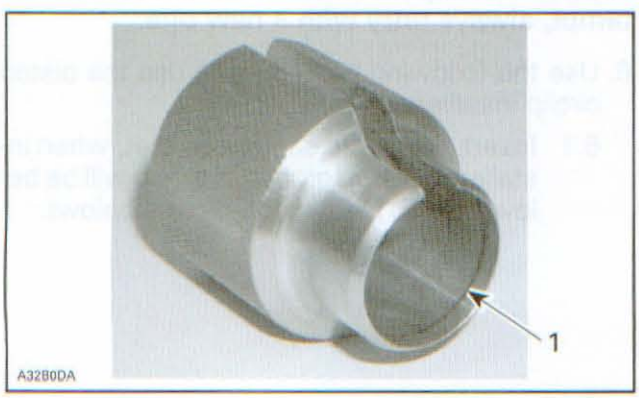

1. Groove



CIRCLIP READY TO BE INSTALLED ON PISTON

6.4 Using a plastic hammer, tap pusher to put the new circlip in place.

NOTE: Make sure to install new circlip(s) with the gap below the tab exactly as shown on the following photo.

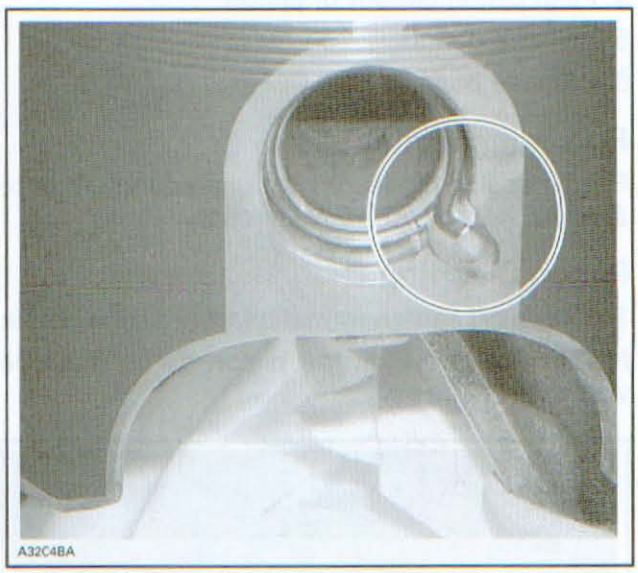

TAB TOWARD TOP

NOTICE Circlips must not move freely after installation; if so, replace them.

7. Install all other removed parts.

CYLINDER BLOCK

Cylinder Block Removal

1. Remove *CYLINDER HEAD* as explained above.
2. Remove muffler, tune pipe and exhaust manifold, refer to *EXHAUST SYSTEM* section.
3. Remove acoustic panel.
4. Remove driven pulley and the countershaft bearing support, refer to *DRIVE SYSTEM/BRAKE*.

www.midwestmanuals.com

5. Disconnect carburetors from intake adapters and set aside.
6. Remove the clamp that supports the RAVE valve hose to the intake adapter on MAG side.
7. Unplug RAVE valve hose from pressure solenoid.
8. Unscrew cylinder screws then remove the cylinder block.

Cylinder Block Inspection

1. Remove RAVE valves, refer to *3D RAVE VALVES REMOVAL* in this section.
2. Remove reed valves, refer to *REED VALVES REMOVAL* in this section.
3. Check cylinders for cracks and scoring on the top and bottom of cylinders. Replace if necessary.

NOTE: Refer to *ENGINE MEASUREMENT* for the measurement procedures.

Cylinder Taper

CYLINDER TAPER	
SERVICE LIMIT	0.1 mm (.004 in)

Cylinder Out of Round

CYLINDER OUT OF ROUND	
SERVICE LIMIT	0.08 mm (.003 in)

Cylinder Block Cleaning

Scrape off carbon formation from exhaust ports.

Cylinder Block Installation

1. Install dowel pins in crankcase holes.

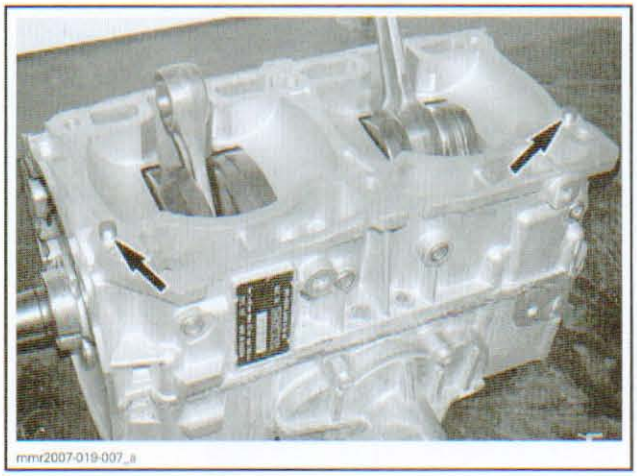

2. Install a NEW base gasket of the same thickness as the old one.
3. Identify gasket thickness by the identification holes on the gasket surface.

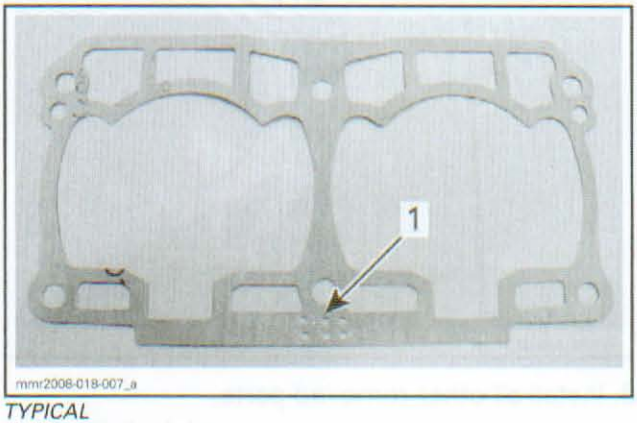

TYPICAL
1. Identification holes

NOTE: The general procedure is to install a new gasket of the same thickness. However if you do not know the thickness of the gasket that was on the engine or if a crankcase and/or crankshaft repair was involved, measure the combustion chamber volume to choose the right gasket, refer to *ENGINE MEASUREMENT*.

NOTICE Always install a gasket of the proper thickness. Failure to do so may cause detonation and severe engine damage.

4. Before inserting piston in cylinder, lubricate the cylinder with new injection oil or equivalent.
5. Carefully slide cylinder block down while squeezing piston rings to allow cylinder insertion. Proceed one piston at a time, the help of an assistant may be required. Do not tighten cylinder block yet.
6. Carefully clean screws before reinstallation, specifically under screw head.
7. Install and tighten cylinder block screws.
   - 7.1 As a first step, torque screws following the illustrated sequence to 25 N•m (18 lbf•ft).
   - 7.2 Then, torque screws following the same sequence to 50 N•m (37 lbf•ft).

NOTE: When a torquing sequence is done, retorque the middle screws.

www.midwestmanuals.com

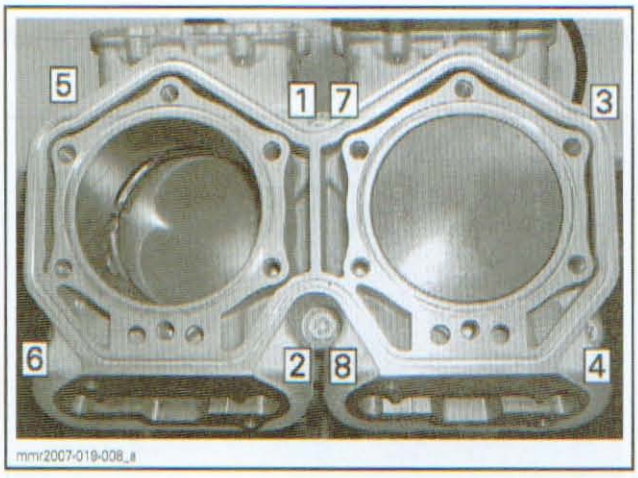

8. Install all other removed parts.

www.midwestmanuals.com

BOTTOM END (593)

SERVICE TOOLS

Description	Part Number	Page
BEARING HEATER	529 035 969	176
BEARING INSTALLER	259 035 980	177
	259 035 990	177
BEARING PULLER	420 877 635	175
CERAMIC SEAL INSTALLER	529 036 014	171–172
CRANKSHAFT PROTECTOR	420 876 552	175
	420 876 557	175
DISTANCE GAUGE	529 035 966	177
	529 035 968	177
HALF RINGS	420 977 479	174
INDICATOR STICK	529 035 970	176
OIL SEAL PROTECTOR	529 035 822	172
OIL SEAL PUSHER	529 035 757	171
PULLER RING	420 977 494	174
SCREWS	420 840 681	175
SUPPORT PLATE	529 035 976	177

SERVICE TOOLS – OTHER SUPPLIER

Description	Part Number	Page
SNAP-ON BEARING SEPARATOR	CJ 951	175
SNAP-ON MANUAL IMPACT DRIVER	PIT120	173
SPX/OTC BEARING SEPARATOR	1124	175

SERVICE PRODUCTS

Description	Part Number	Page
ISOFLEX GREASE	293 550 021	178
LOCTITE 5910	293 800 081	173
LOCTITE 767 (ANTISEIZE LUBRICANT)	293 800 070	176
LOCTITE CHISEL	413 708 500	173
PULLEY FLANGE CLEANER	413 711 809	176
XP-S LUBE	293 600 016	175

www.midwestmanuals.com

500SS/600

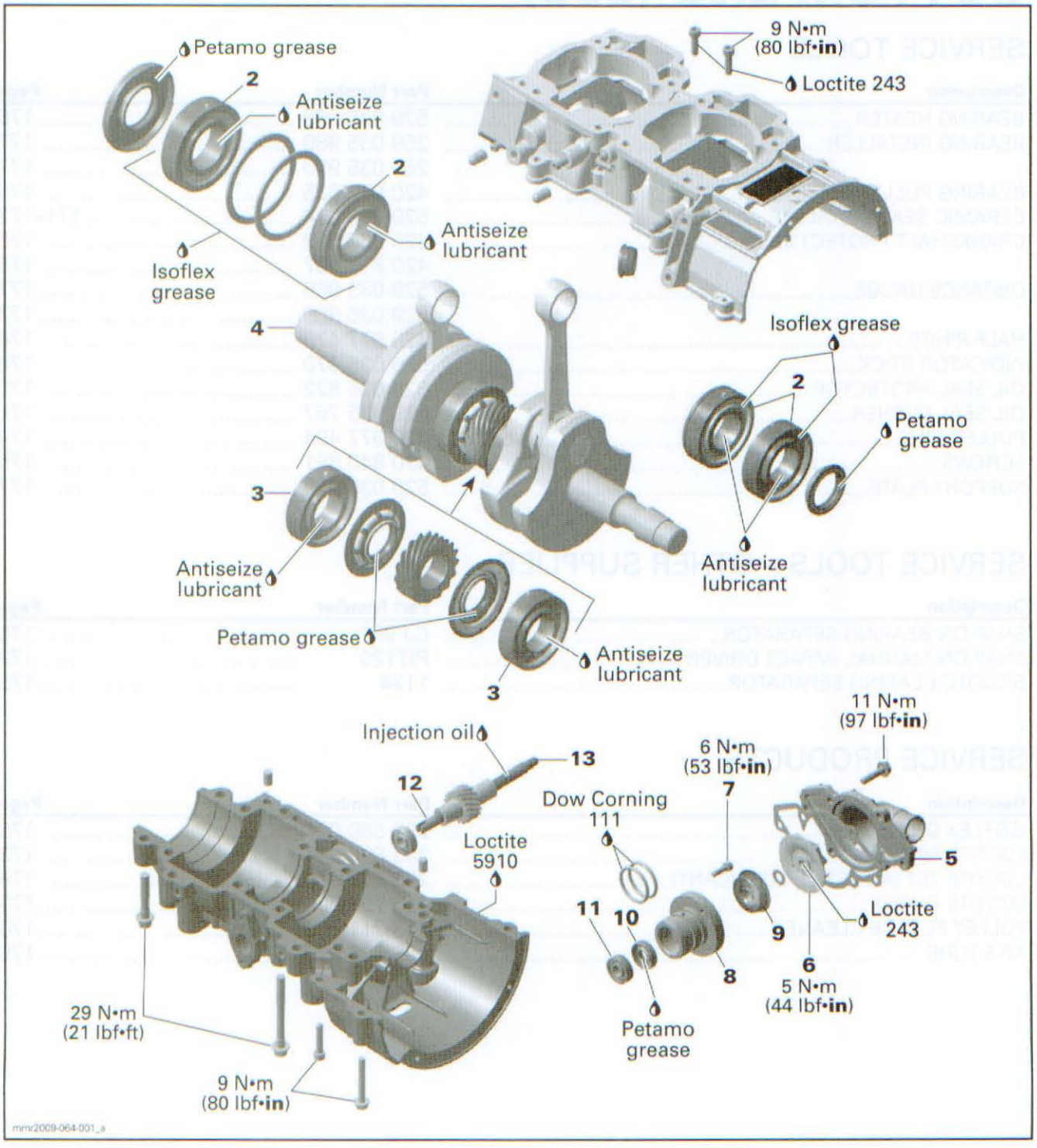

www.midwestmanuals.com

600 HO E-TEC

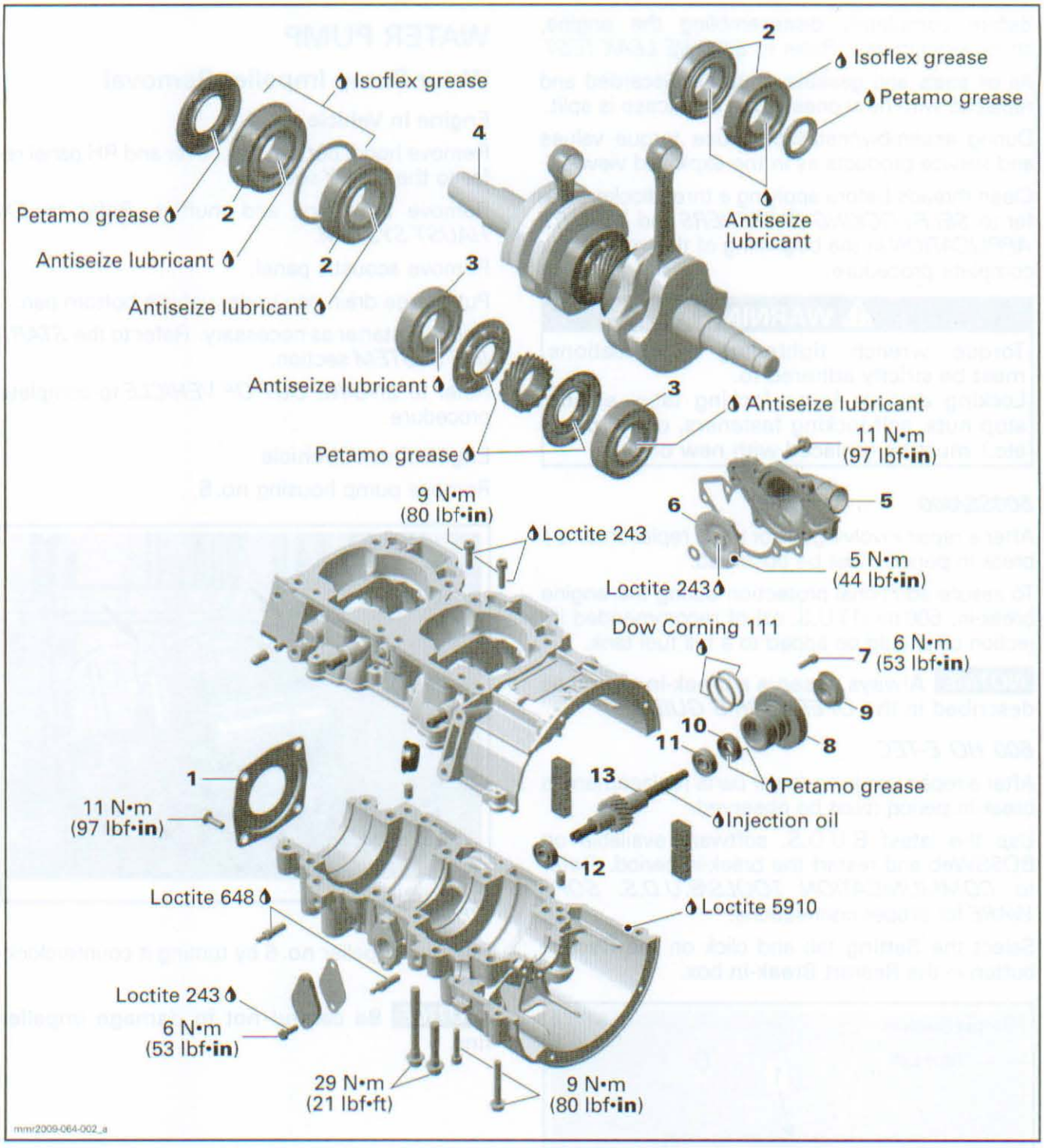

www.midwestmanuals.com

GENERAL

Before completely disassembling the engine, check airtightness. Refer to *ENGINE LEAK TEST*.

All oil seals and gaskets must be discarded and replaced with new ones when crankcase is split.

During assembly/installation, use torque values and service products as in the exploded view.

Clean threads before applying a threadlocker. Refer to *SELF-LOCKING FASTENERS* and *LOCTITE APPLICATION* at the beginning of this manual for complete procedure.

⚠ WARNING

Torque wrench tightening specifications must be strictly adhered to.
Locking devices (e.g.: locking tabs, elastic stop nuts, self-locking fasteners, cotter pins, etc.) must be replaced with new ones.

500SS/600

After a repair involving major parts replacement, a break-in period must be observed.

To assure additional protection during the engine break-in, 500 ml (17 U.S. oz) of recommended injection oil should be added to a full fuel tank.

NOTICE Always observe a break-in period as described in the *OPERATOR'S GUIDE*.

600 HO E-TEC

After a repair involving major parts replacement, a break-in period must be observed.

Use the latest B.U.D.S. software available on BOSSWeb and restart the break-in period. Refer to *COMMUNICATION TOOLS/B.U.D.S. SOFTWARE* for proper connections.

Select the **Setting** tab and click on the **Restart** button in the **Restart Break-in** box.

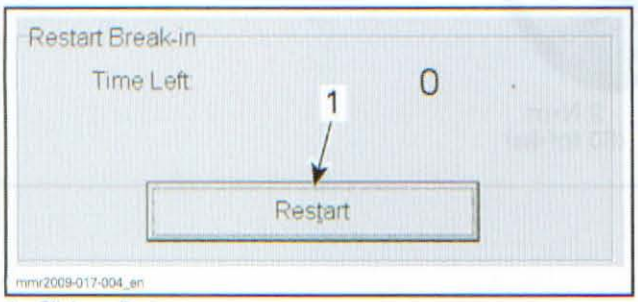

1. Click on Restart

NOTICE Always observe a break-in period as described in the *OPERATOR'S GUIDE*.

PROCEDURES

WATER PUMP

Water Pump Impeller Removal

Engine In Vehicle

Remove hood, bottom pan cover and RH panel refer to the *BODY* section.

Remove tune pipe and muffler. Refer to *EXHAUST SYSTEM*.

Remove acoustic panel.

Put a large drain pan under vehicle bottom pan.

Remove starter as necessary. Refer to the *STARTING SYSTEM* section.

Refer to *ENGINE OUT OF VEHICLE* to complete procedure.

Engine Out of Vehicle

Remove pump housing **no. 5**.

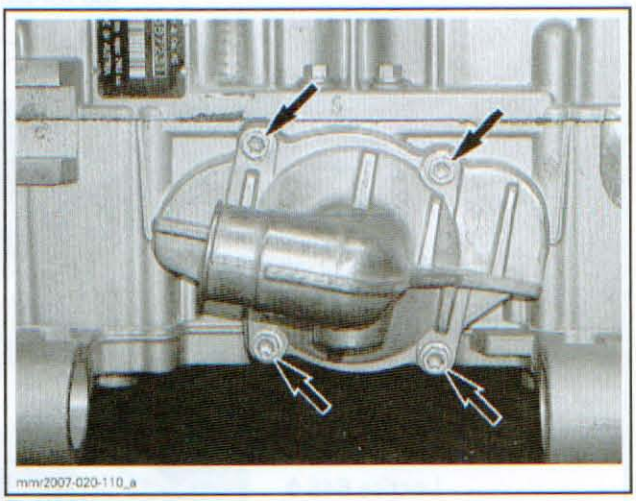

TYPICAL

Remove impeller **no. 6** by turning it counterclockwise.

NOTICE Be careful not to damage impeller fins.

www.midwestmanuals.com

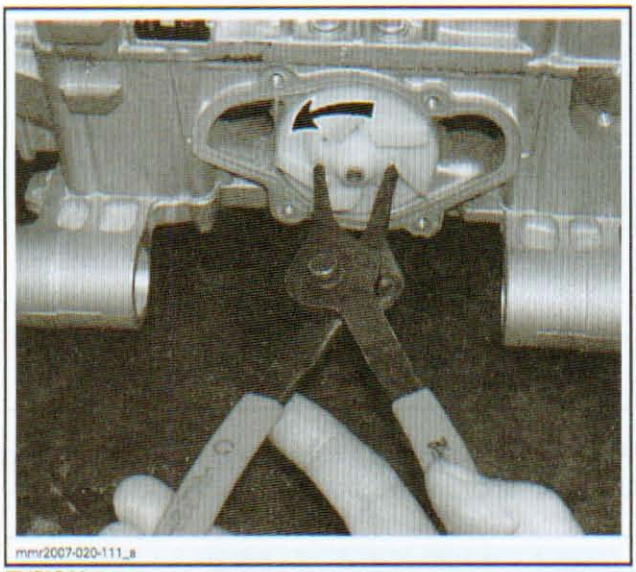

TYPICAL

Clean gasket surfaces of pump housing and crankcase.

Water Pump Impeller Installation

Install a new gasket.

Reverse removal procedure.

Ceramic Seal Replacement

The water pump shaft must be removed to replace the ceramic seal. Refer to *WATER PUMP SHAFT*.

WATER PUMP SHAFT

Water Pump Shaft Removal

NOTE: It is not necessary to split crankcase to pull out shaft.

Remove engine from vehicle. Refer to *ENGINE REMOVAL AND INSTALLATION* section.

Remove oil injection pump (500SS/600) or cover plate (600 HO E-TEC).

Remove water pump housing and impeller. Refer to *WATER PUMP*.

Remove bearing housing screws **no. 7**.

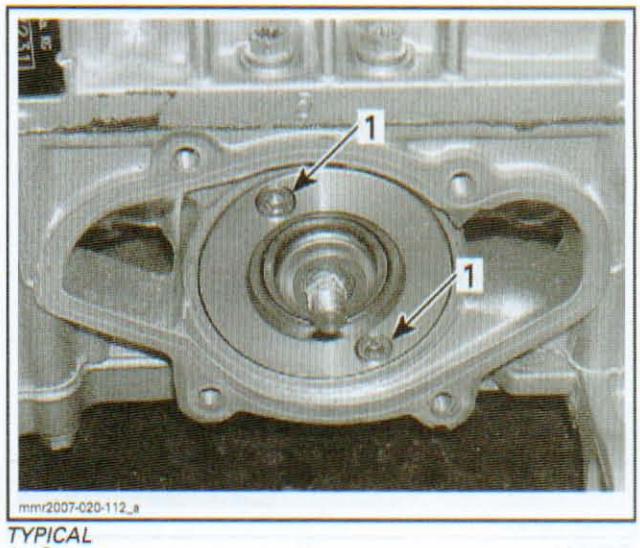

TYPICAL
1. Screws

From the opposite side of water pump housing, push shaft out while turning shaft to release it from worm gear.

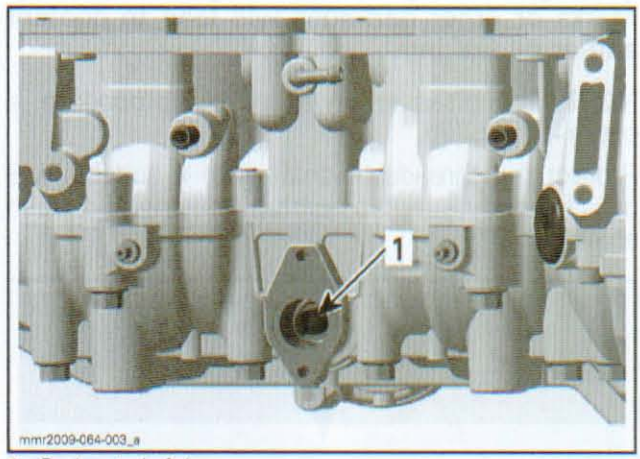

1. Push out shaft here

Then, extract shaft.

www.midwestmanuals.com

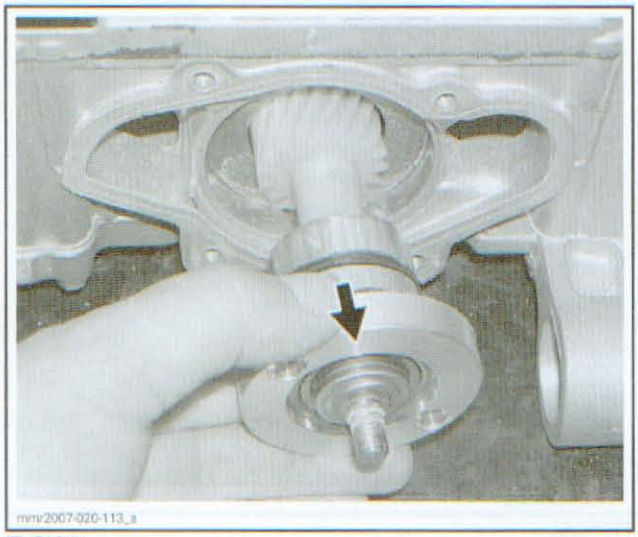

TYPICAL

Water Pump Shaft Disassembly

NOTICE Pay attention not to damage the bearing housing no. **8** during disassembly. Marks or other damages will lead to coolant and/or oil leaking.

NOTE: For disassembly/assembly procedure a press is required.

Protect the threads of shaft with a suitable M8 nut. Properly support bearing housing and push shaft out.

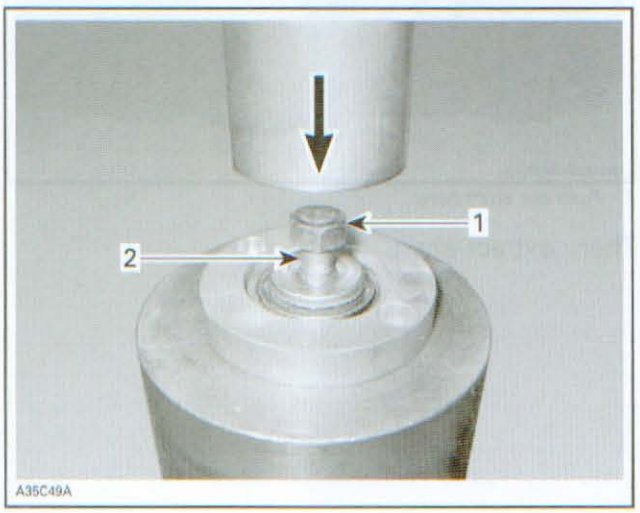

1. *M8 nut*
2. *Shaft*

NOTICE When removing water pump shaft, always replace ceramic seal no. **9** and oil seal no. **10**. Ceramic seal cannot be removed without damage.

Pry inner part of ceramic seal **no. 9** out.

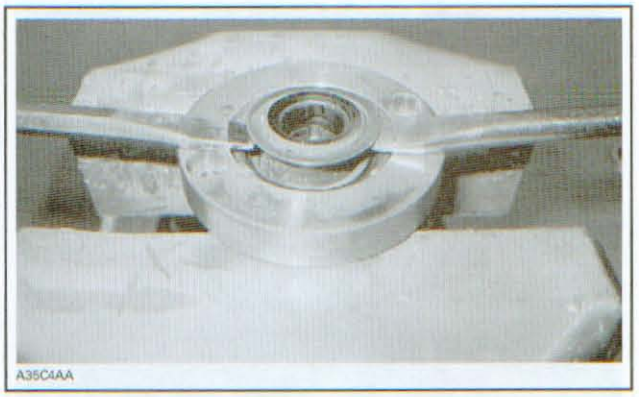

Push out bearing **no. 11** from the bearing housing using an appropriate pusher.

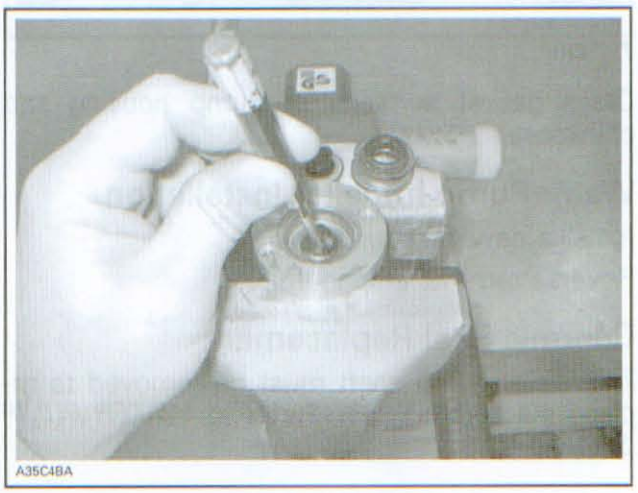

Push oil seal **no. 10** out.

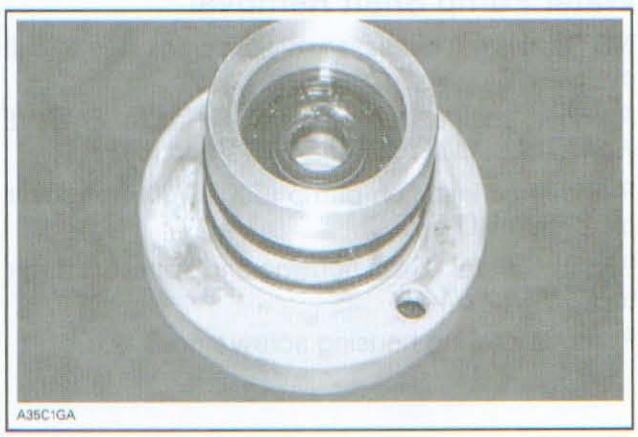

Carefully press the outer part of ceramic seal out.

NOTE: Use a mandrel with a diameter of approximately 16 mm (.63 in).

www.midwestmanuals.com

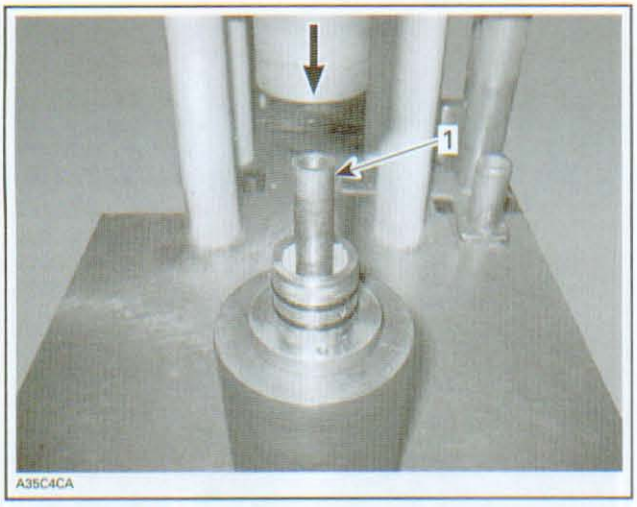

1. 16 mm (.63 in) mandrel

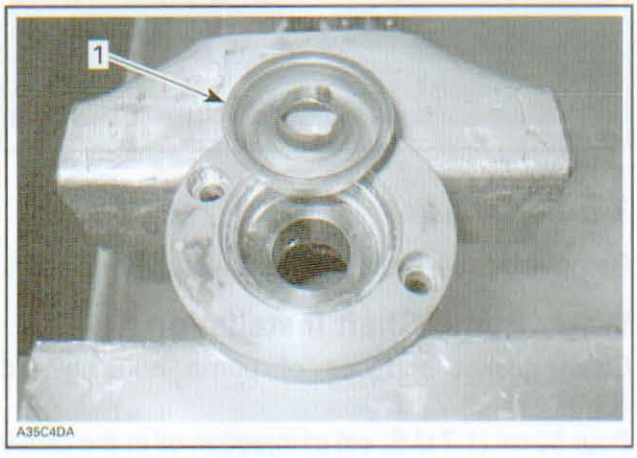

1. Outer part of ceramic seal

Remove sealant from bearing housing with sand paper no. 180.

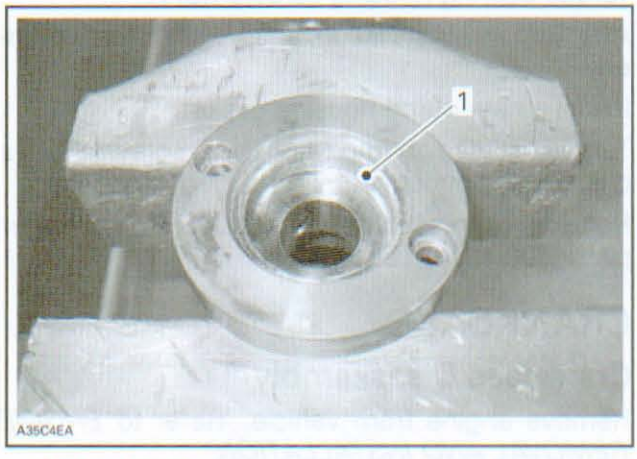

1. Remove sealant

To extract bearing **no. 12** either use a hammer puller or an appropriate pusher.

Water Pump Shaft Assembly

Reverse disassembly procedure and pay attention to the following.

NOTE: Never put oil in the press fit area of the oil seal and ceramic seal.

Push the new oil seal **no. 10** in bearing housing using the OIL SEAL PUSHER (P/N 529 035 757).

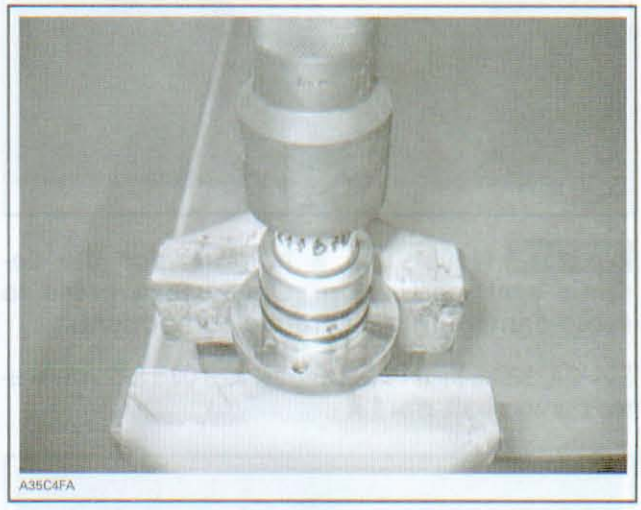

Press bearing **no. 11** into bearing housing **no. 8**.



Push the new ceramic seal **no. 9** in bearing housing **no. 8** using the CERAMIC SEAL INSTALLER (P/N 529 036 014).

www.midwestmanuals.com

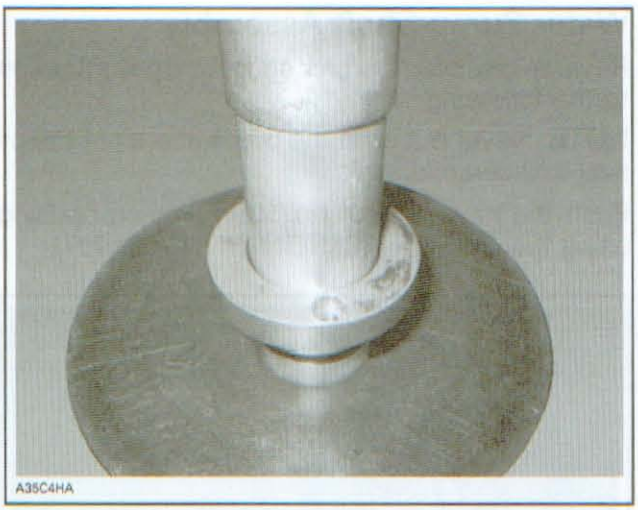

NOTICE Never use a hammer for the ceramic seal installation. Only use a press to avoid damaging the ceramic component.

Put OIL SEAL PROTECTOR (P/N 529 035 822) on water pump shaft **no. 13**.

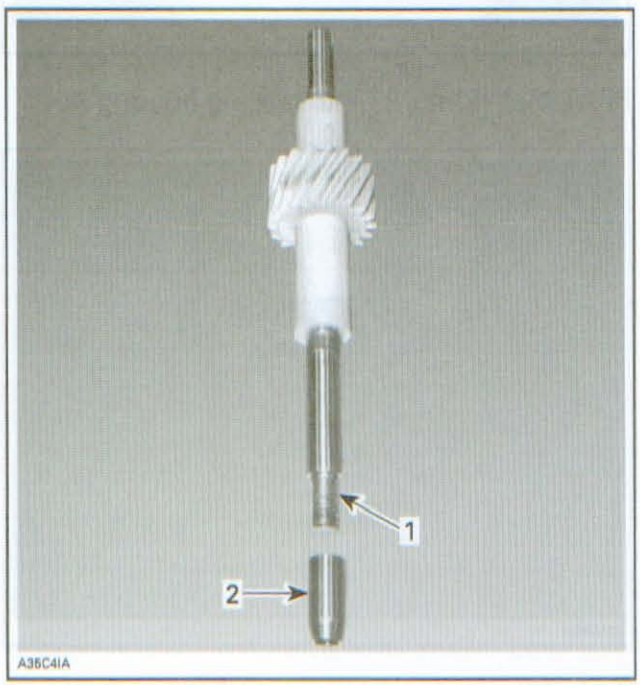

1. Water pump shaft
2. Oil seal protector

Press water pump shaft **no. 13** into the bearing housing **no. 8** with appropriate force.

NOTICE Inadequate force will damage the oil seal **no. 10** and bearing **no. 11**.

NOTE: During installation support the ceramic seal using the CERAMIC SEAL INSTALLER (P/N 529 036 014) as shown on the following illustration.

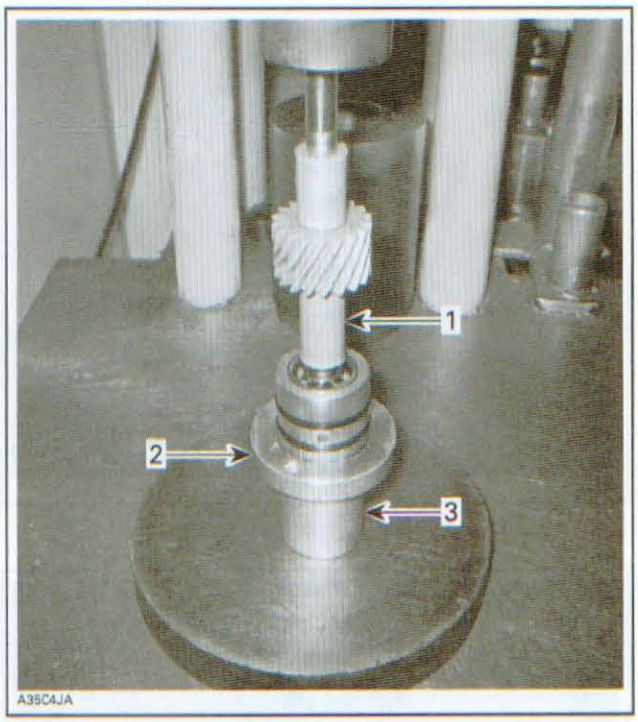

1. Water pump shaft
2. Bearing housing
3. Ceramic seal installer

Remove oil seal protector from water pump shaft.

Water Pump Shaft Installation

Clean gasket surfaces of pump housing and crankcase.

Pour 50 ml (1.7 U.S. oz) of injection oil in the cavity under worm gear to lubricate pump gearing.

Install water pump shaft assembly in crankcase while turning shaft to mesh gears.

Torque bearing housing screws **no. 7**.

After impeller installation, ensure shaft turns properly.

Install a new pump housing gasket.

Torque water pump housing screws in a criss-cross sequence.

Reinstall oil injection pump (500SS/600) or cover plate (600 HO E-TEC).

CRANKCASE

Crankcase Disassembly

Remove engine from vehicle. Refer to *ENGINE REMOVAL AND INSTALLATION*.

Remove cylinder head and cylinders. Refer to *TOP END (593)*.

Remove rewind starter. Refer to *REWIND STARTER*.

www.midwestmanuals.com

Remove trigger coils (500SS/600) or crankshaft position sensor (600 HO E-TEC), magneto flywheel and stator. Refer to *MAGNETO SYSTEM*.

Remove front engine supports.

Remove drive pulley. Refer to *DRIVE SYSTEM AND BRAKE*.

Remove PTO oil seal cover **no. 1**.

NOTE: Tap screw heads to break the Loctite bond or use a SNAP-ON MANUAL IMPACT DRIVER (P/N PIT120).

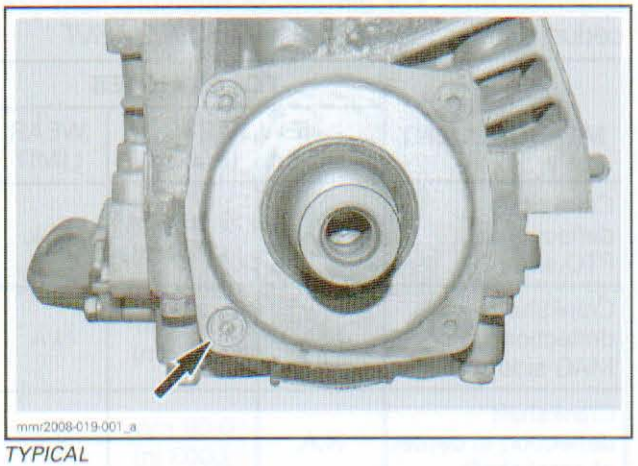

TYPICAL

Remove all screws that retain crankcase halves together.

Split crankcase and remove crankshaft.

Clean all metal components in a non-ferrous metal cleaner. Use LOCTITE CHISEL (P/N 413 708 500) accordingly.

NOTICE **Never use a sharp object to scrape away old sealant as score marks incurred are harmful to crankcase sealing.**

Crankcase Inspection

Check crankcase for cracks or other damages. Replace if necessary.

Crankcase Assembly

Install crankshaft in lower crankcase. See *CRANKSHAFT* for procedure.

Apply LOCTITE 5910 (P/N 293 800 081) on crankcase halves. Proceed as follows.

IMPORTANT: The total assembly sequence, including sealing compound application and crankcase torquing, must be performed within 10 minutes.

Use a plexiglass plate and apply some sealant on it. Use a 50 - 75 mm (2 - 3 in) soft rubber roller and spread the sealant to get a thin uniform coat on the plate (spread as necessary).

When ready, apply the sealant on crankcase mating surfaces.

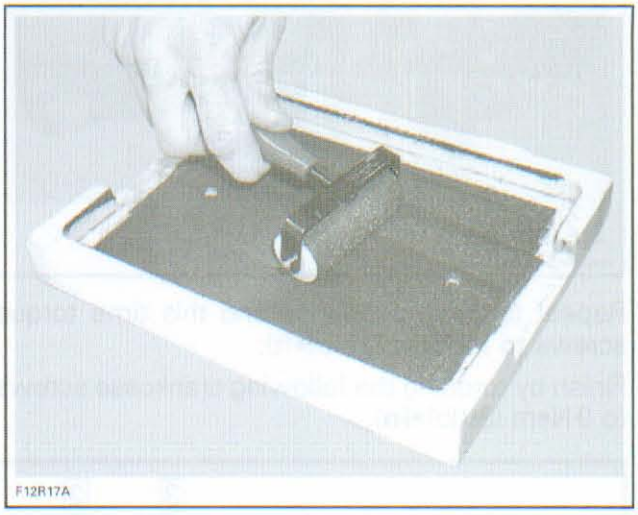

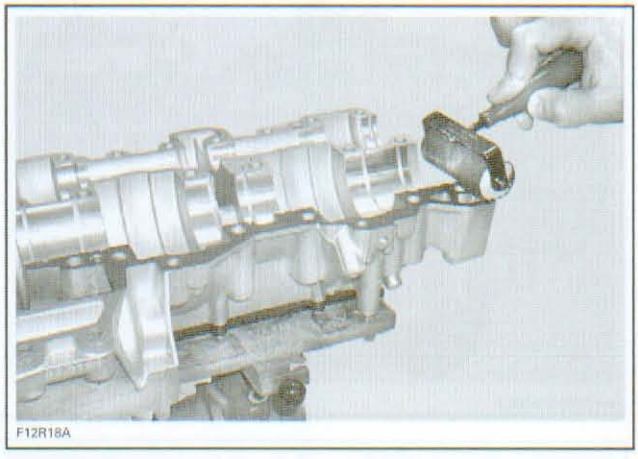

NOTE: If you do not use the roller method, you may use your finger to uniformly distribute the sealant.

Assemble both crankcase halves.

As a first step, torque screws to 18 N•m (159 lbf•**in**) as per following illustrated sequence.

www.midwestmanuals.com

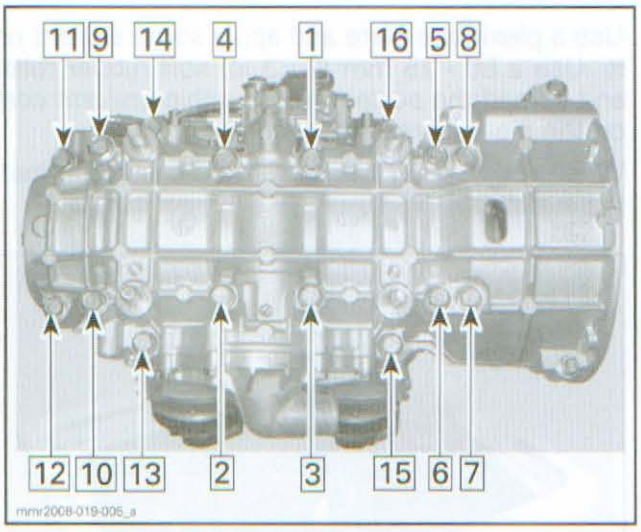

Repeat torquing sequence and this time torque screws to 29 N•m (21 lbf•ft).

Finish by torquing the following crankcase screws to 9 N•m (80 lbf•**in**).

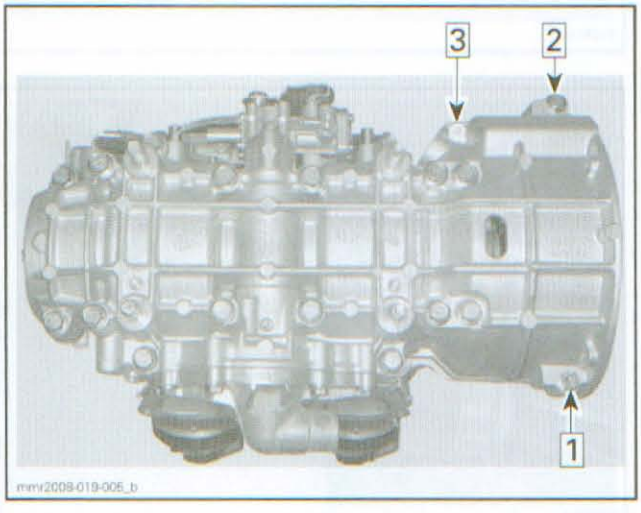

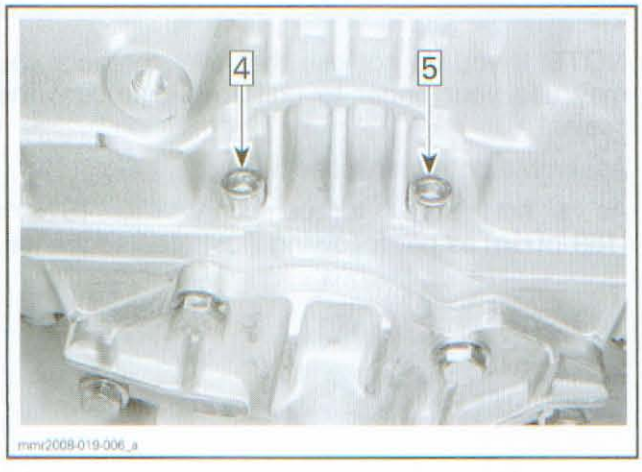

Install PTO oil seal cover (600 HO E-TEC engine).

CRANKSHAFT

Crankshaft Removal

To remove crankshaft, use crankcase disassembly procedure.

Crankshaft Inspection

Check crankshaft bearings. They must turn smoothly and without noise. Replace as required.

Refer to table below to find crankshaft dimension specifications. For dimension measurement procedures, refer to *ENGINE MEASUREMENT*.

ENGINE MEASUREMENT	TOLERANCES		
	NEW PARTS (min.)	(max.)	WEAR LIMIT
Crankshaft deflection on PTO side	N.A.	0.06 mm (.002 in)	N.A.
Crankshaft deflection on MAG side	N.A.	0.05 mm (.002 in)	N.A.
Crankshaft deflection in center of crankshaft	N.A.	0.08 mm (.003 in)	N.A.
Connecting rod big end axial play	500SS/600		
	0.35 mm (.014 in)	0.74 mm (.029 in)	1.20 mm (.047 in)
	600 HO E-TEC		
	0.28 mm (.011 in)	0.68 mm (.027 in)	1.20 mm (.047 in)
Crankshaft end-play	0.10 mm (.004 in)	0.30 mm (.012 in)	N.A.

Crankshaft Bearing Removal

NOTE: Normally it takes approximately 10 minutes to heat up a bearing so in the event of replacing bearing, it's recommended to start the bearing heating process prior to removal operation. See procedure further.

To remove bearings **no. 2** and **no. 3** from crankshaft **no. 4**, install HALF RINGS (P/N 420 977 479) and PULLER RING (P/N 420 977 494) on the outer bearing.

www.midwestmanuals.com



1. *Half ring*
2. *Puller ring*

NOTE: Apply some grease on crankshaft end to hold in place the CRANKSHAFT PROTECTOR (P/N 420 876 552) on PTO side and CRANKSHAFT PROTECTOR (P/N 420 876 557) on MAG side.

Using SCREWS (P/N 420 840 681), install BEARING PULLER (P/N 420 877 635) on the half rings.

Secure the bearing puller in a vise by one of its rib.

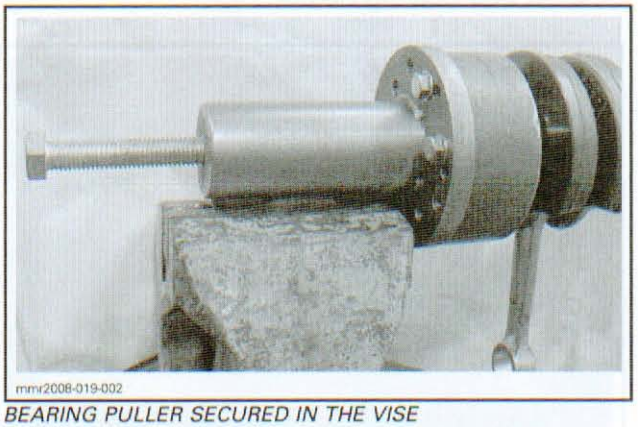

BEARING PULLER SECURED IN THE VISE

NOTICE Never use any air impact tool for tightening the puller bolt. Lubricate the bolt with XP-S LUBE (P/N 293 600 016) to avoid damaging the threads.

Screw in the puller bolt until the bearing comes out.

Follow the same procedure for the inner bearing.

NOTE: In the case of damaged bearing or less clearance between crankshaft counterbalance and the bearing or on the MAG side bearing, use SNAP-ON BEARING SEPARATOR (P/N CJ 951) or SPX/OTC BEARING SEPARATOR (P/N 1124) to facilitate the removal.

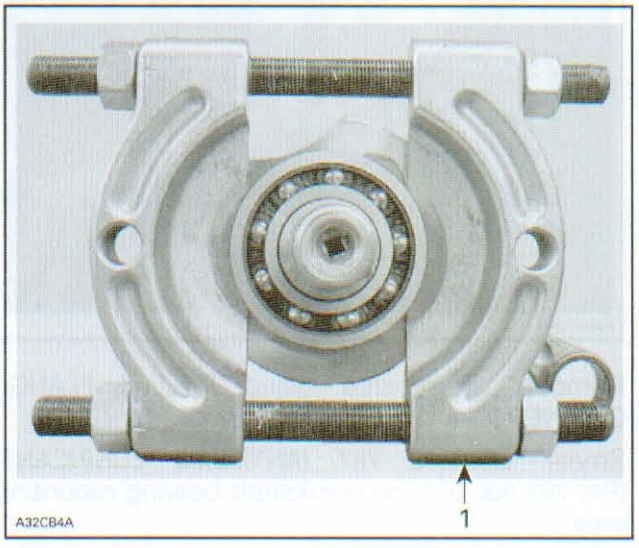

1. *Bearing separator*

Crankshaft Bearing Installation

Inspect crankshaft ends for damage.

Clean crankshaft ends with sand paper no. 180 to remove possible seal marks and debris.



www.midwestmanuals.com

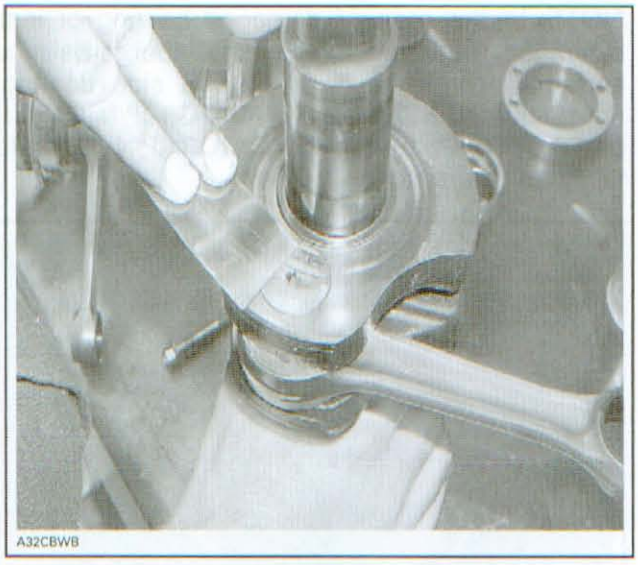
A32CBW8

Remove all residue using PULLEY FLANGE CLEANER (P/N 413 711 809).

Smear LOCTITE 767 (ANTISEIZE LUBRICANT) (P/N 293 800 070) on crankshaft bearing mounting area.

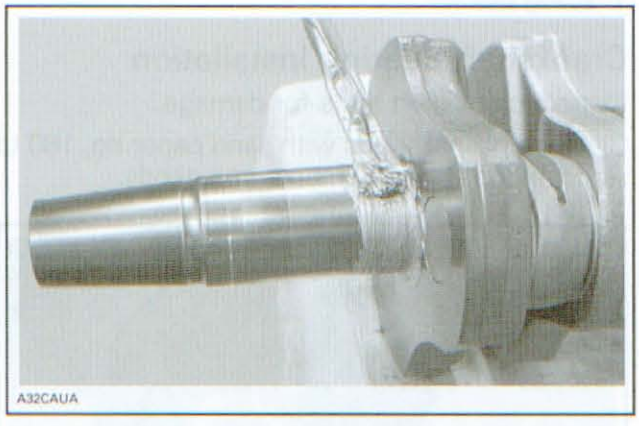
A32CAUA

Bearing Heating

Heat up the bearing(s) using BEARING HEATER (P/N 529 035 969). This will expand bearings and ease installation. If required, put a suitable plate or shim to avoid the direct contact between integrated seal with the heating surface.


A32CB7A

NOTICE Bearing(s) should not be heated to more than 80°C (176°F). Do not heat bearing(s) with direct flame, or with a heat gun or soaked in a heated oil bath. Inappropriate bearing(s) heating may result in inner seals or cage failure.

For even heat distribution, turn bearing several times during heating process.

NOTE: Two bearings can be heated at the same time on one bearing heater.

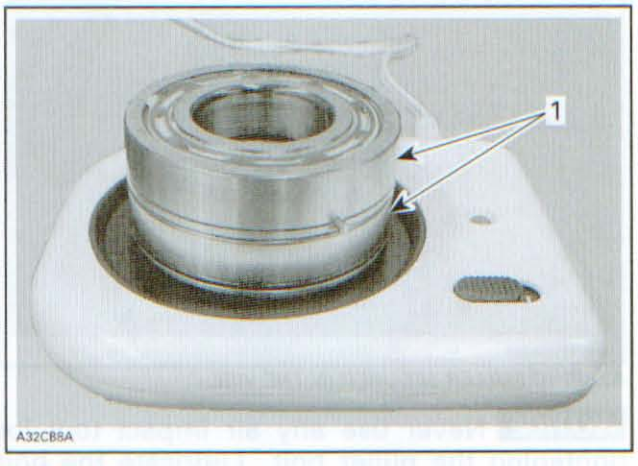

A32CB8A

1. Bearings

Probe the side of the inner race of the bearing with the temperature INDICATOR STICK (P/N 529 035 970). Stick will liquefy when the bearing reach the proper temperature.

www.midwestmanuals.com

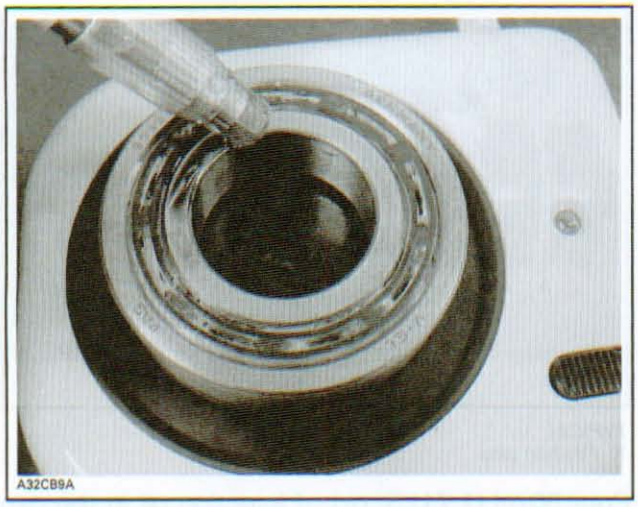

⚠ WARNING

Do not touch heated bearing with bare hands. Always wear heat resisting gloves before handling the heated bearing(s).

NOTICE Never reinstall a bearing that has been removed.

PTO Side Bearings

Slide in the inner PTO bearing with the integrated seal facing crankshaft. Push bearing to end position.



NOTE: Heated bearing should slide easily onto the crankshaft. If required, push with a BEARING INSTALLER (P/N 259 035 990) on the inner ring of the bearing. **Pay special attention to correct positioning of the locating pins and/or retaining discs.**

Install retaining discs.

Install SUPPORT PLATE (P/N 529 035 976) with appropriate distance gauge; refer to following table.

TOOL	ENGINE
DISTANCE GAUGE (P/N 529 035 966)	500SS/600
DISTANCE GAUGE (P/N 529 035 968)	600 HO E-TEC

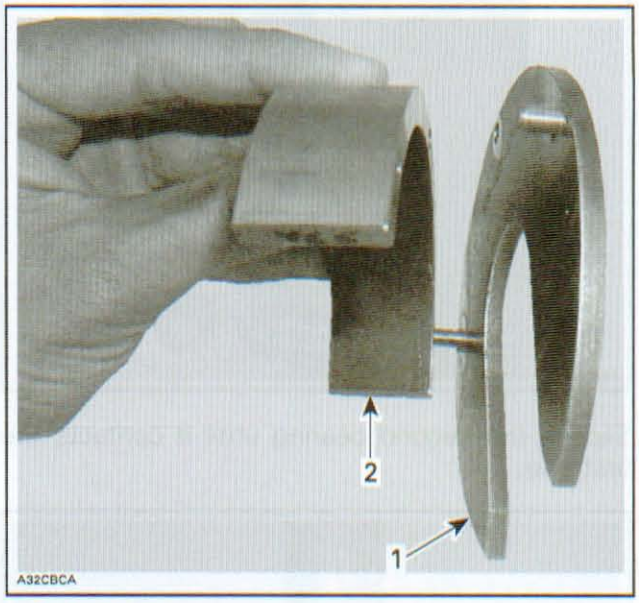

1. Support plate
2. Distance gauge

Install bearing locator tool.



Slide the heated outer PTO bearing onto the crankshaft until it contacts the distance gauge.

MAG Side Bearings

Slide the first MAG bearing **with the integrated seal facing crankshaft** until it bottoms on crankshaft shoulder.

NOTE: Heated bearing should slide easily onto the crankshaft. If required, push with a BEARING INSTALLER (P/N 259 035 980) on the inner ring of the bearing.

www.midwestmanuals.com



Slide-in the second bearing until it contacts the first one.



Crankshaft Installation

At crankshaft installation, position locating pins as illustrated.

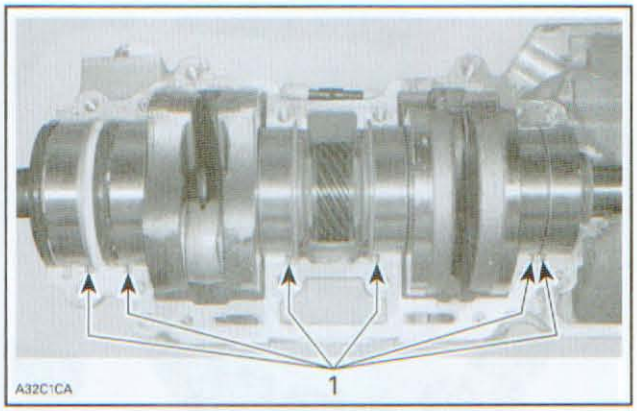

TYPICAL
1. Position pins

Pour 50 ml (1.7 U.S. oz) of injection oil in the pan under worm gear to lubricate worm gear as per photo.

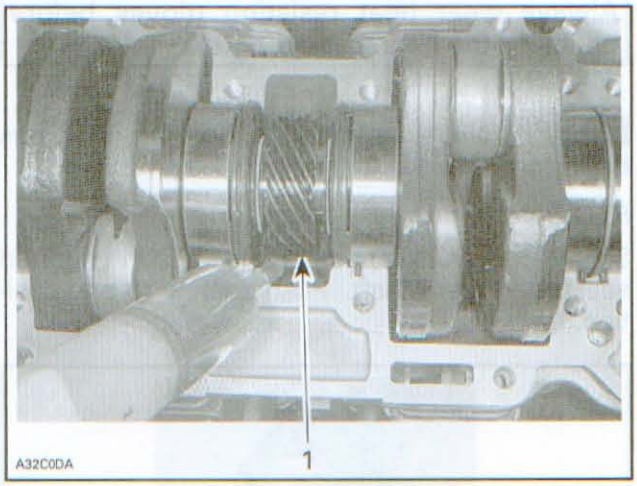

1. Oil bath

Apply ISOFLEX GREASE (P/N 293 550 021) as per following procedure:

NOTICE **Use only the recommended grease. Make sure not to push grease between the outside bearing race and the crankcase half.**

Put the following quantity of grease in a syringe.

ENGINE	QUANTITY OF GREASE
500SS/600	42 ± 5 ml (1.4 U.S. oz)
600 HO E-TEC	30 ± 5 ml (1 U.S. oz)

NOTE: The 50 g tube corresponds to 50 ml of grease.

NOTICE **Do not exceed the recommended amount of grease.**

Fill inner side of PTO side bearing with grease (about 10 ml (.3 U.S. oz).

www.midwestmanuals.com

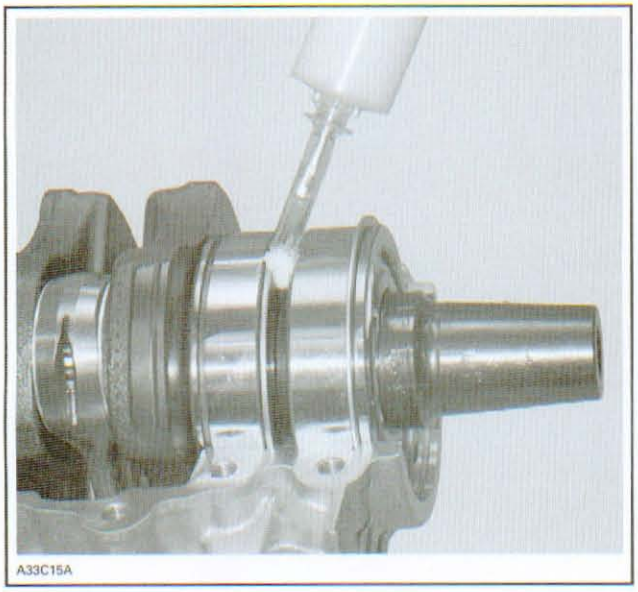
A33C15A

PTO SIDE BEARING FILLED WITH GREASE

With the syringe, fill the outer ball bearing and inner side of outer seal with the remaining of grease.

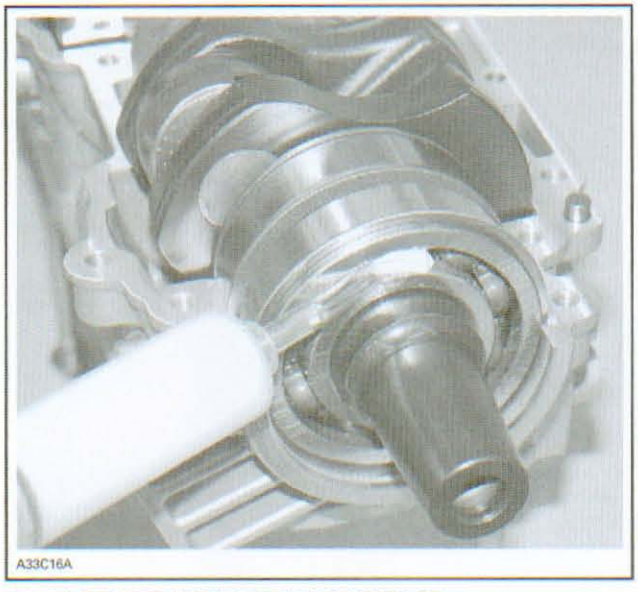
A33C16A

BALLS COATED WITH A SEAM OF GREASE

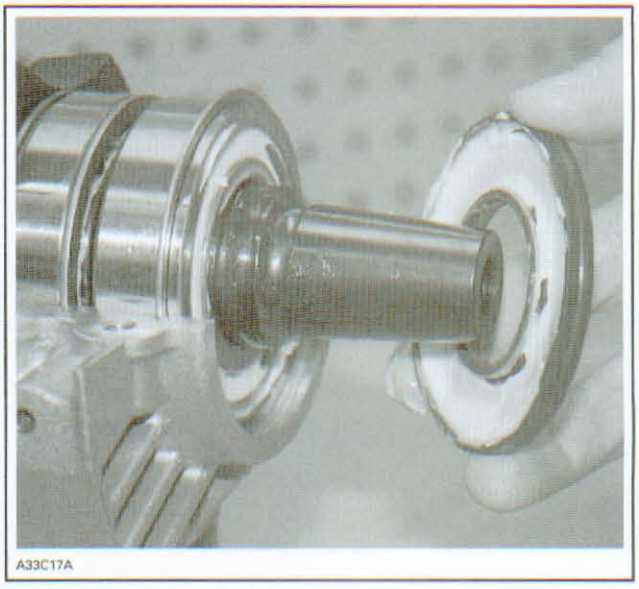
A33C17A

TYPICAL — FILL WITH GREASE AND SET IN PLACE

Apply 6 ml (.2 U.S. oz) of grease to MAG side outer bearing.

NOTE: If replaced with new bearing, do not apply grease as new bearings come with grease already applied.

Proceed with crankcase assembly. Refer to *CRANKCASE*.

www.midwestmanuals.com

www.midwestmanuals.com

BOTTOM END (797)

SERVICE TOOLS

Description	Part Number	Page
BEARING HEATER	529 035 969	192
BEARING PULLER	529 036 004	191
CERAMIC SEAL INSTALLER	529 036 014	186
DISTANCE GAUGE	529 036 060	194
INDICATOR STICK	529 035 970	193
OIL SEAL PROTECTOR	529 035 822	186
OIL SEAL PUSHER	529 035 757	185
SCREWS	420 840 681	191

SERVICE TOOLS – OTHER SUPPLIER

Description	Part Number	Page
SNAP-ON BEARING SEPARATOR	CJ 951	191
SNAP-ON MANUAL IMPACT DRIVER	PIT120	187
SPX/OTC BEARING SEPARATOR	1124	191

SERVICE PRODUCTS

Description	Part Number	Page
ISOFLEX GREASE	293 550 021	195
LOCTITE 5910	293 800 081	188
LOCTITE 767 (ANTISEIZE LUBRICANT)	293 800 070	192
LOCTITE CHISEL	413 708 500	188
PULLEY FLANGE CLEANER	413 711 809	192
XP-S LUBE	293 600 016	191

www.midwestmanuals.com

800R

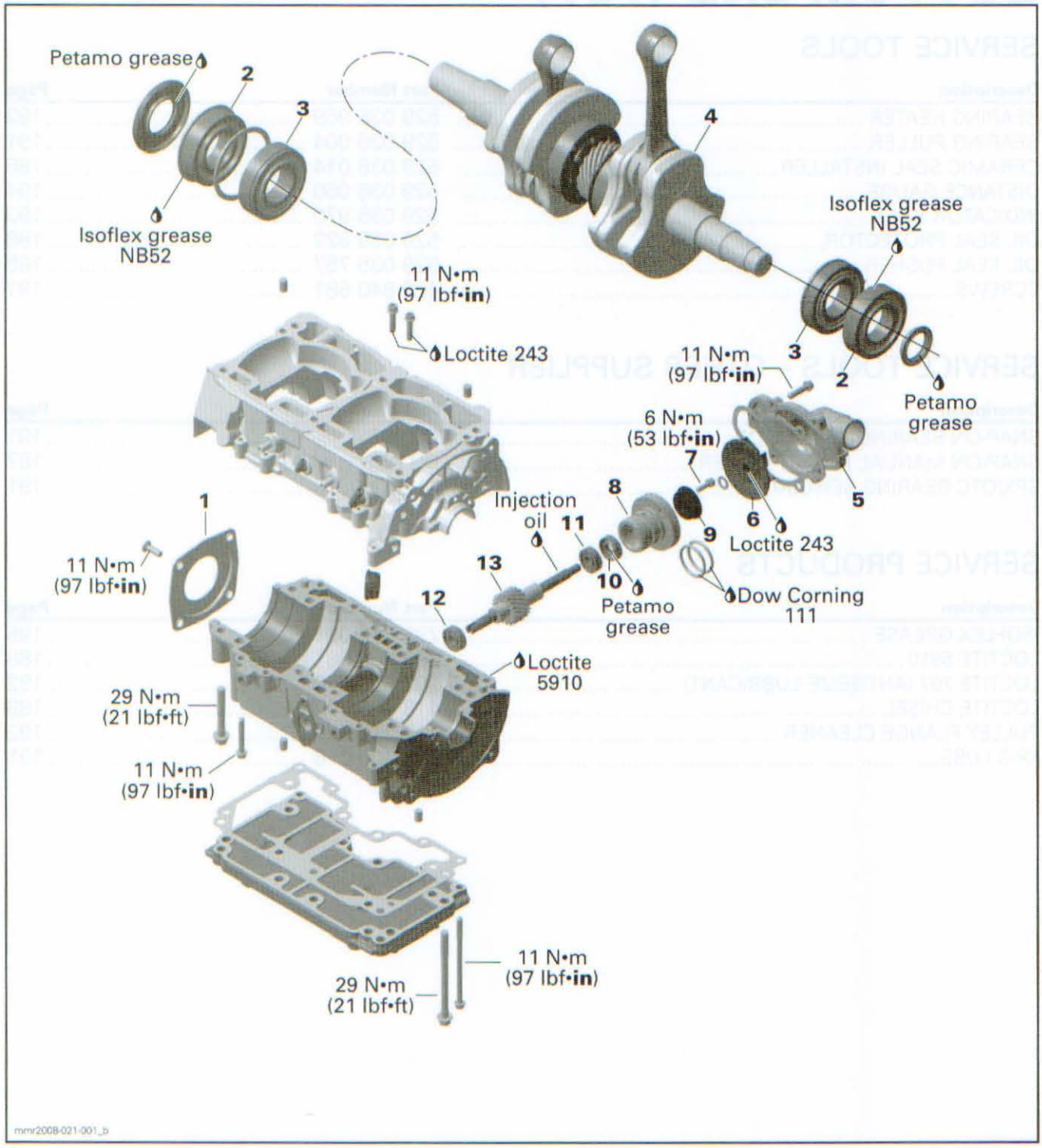

www.midwestmanuals.com

GENERAL

Before completely disassembling the engine, check airtightness. Refer to *ENGINE LEAK TEST*.

All oil seals and gaskets must be discarded and replaced with new ones when crankcase is split.

During assembly/installation, use torque values and service products as in the exploded view.

Clean threads before applying a threadlocker. Refer to *SELF-LOCKING FASTENERS* and *LOCTITE APPLICATION* at the beginning of this manual for complete procedure.

⚠ WARNING

Torque wrench tightening specifications must be strictly adhered to.
Locking devices (e.g.: locking tabs, elastic stop nuts, self-locking fasteners, cotter pins, etc.) must be replaced with new ones.

After a repair involving major parts replacement, a break-in period must be observed.

To assure additional protection during the engine break-in, 500 ml (17 U.S. oz) of recommended injection oil should be added to a full fuel tank.

NOTICE Always observe a break-in period as described in the *OPERATOR'S GUIDE*.

PROCEDURES

WATER PUMP

Water Pump Impeller Removal

Engine In Vehicle

Remove hood, bottom pan cover and RH panel. Refer to the *BODY* section.

Remove tune pipe and muffler. Refer to *EXHAUST SYSTEM*.

Remove acoustic panel.

Put a large drain pan under vehicle bottom pan.

Remove starter, refer to the *STARTING SYSTEM* section.

Refer to *ENGINE OUT OF VEHICLE* to complete procedure.

Engine Out of Vehicle

Remove pump housing **no. 5**.

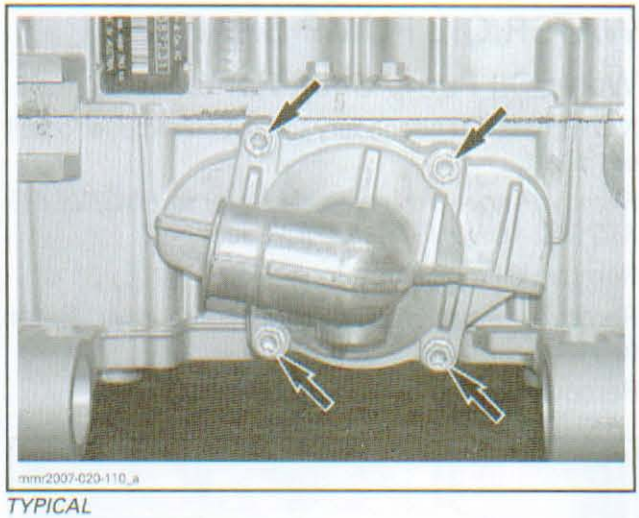

mmr2007-020-110_a

TYPICAL

Remove impeller **no. 6** by turning it counterclockwise.

NOTICE Be careful not to damage impeller fins.

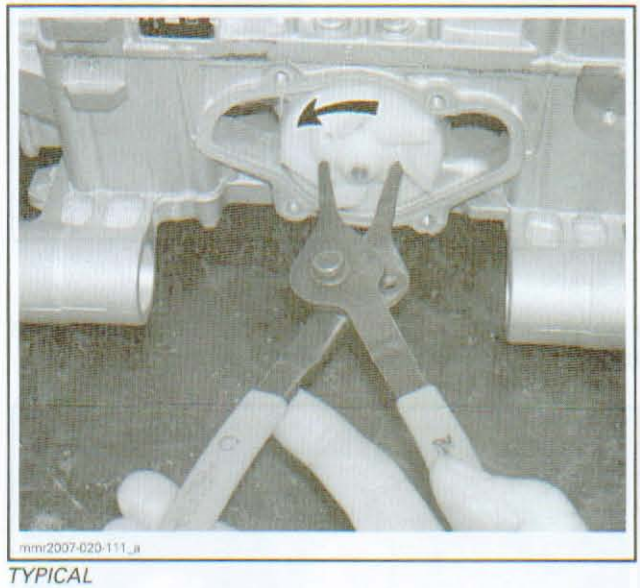

mmr2007-020-111_a

TYPICAL

Clean gasket surfaces of pump housing and crankcase.

Water Pump Impeller Installation

Install a new gasket.

Reverse removal procedure.

Ceramic Seal Replacement

The water/oil pump shaft must be removed to replace the ceramic seal. Refer to *WATER/OIL PUMP SHAFT*.

www.midwestmanuals.com

WATER/OIL PUMP SHAFT

Water/Oil Pump Shaft Removal

NOTE: It is not necessary to split crankcase to pull out shaft.

Remove engine from vehicle Refer to *ENGINE REMOVAL AND INSTALLATION* section.

Remove oil injection pump.

Remove water pump housing and impeller. Refer to *WATER PUMP*.

Remove bearing housing screws **no. 7**.

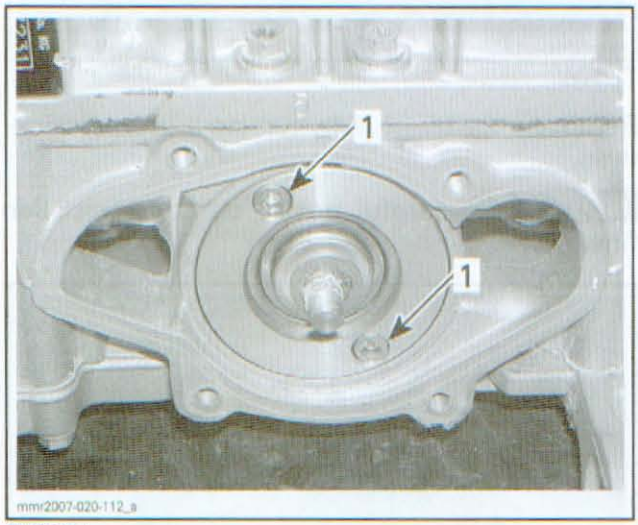

TYPICAL
1. Screws

From oil injection pump side, push shaft out while turning shaft to release it from worm gear.

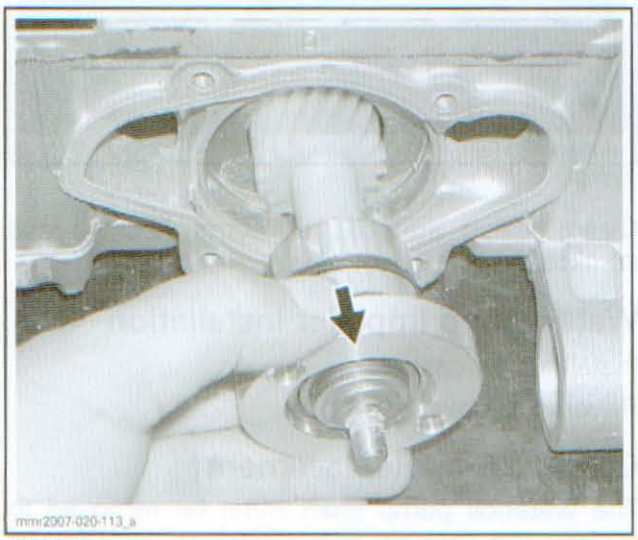

TYPICAL

Water/Oil Pump Shaft Disassembly

NOTICE Pay attention not to damage the bearing housing **no. 8** during disassembly. Marks or other damages will lead to coolant and/or oil leaking.

NOTE: For disassembly/assembly procedure a press is required.

Protect the threads of shaft with a suitable M8 nut. Properly support bearing housing and push shaft out.

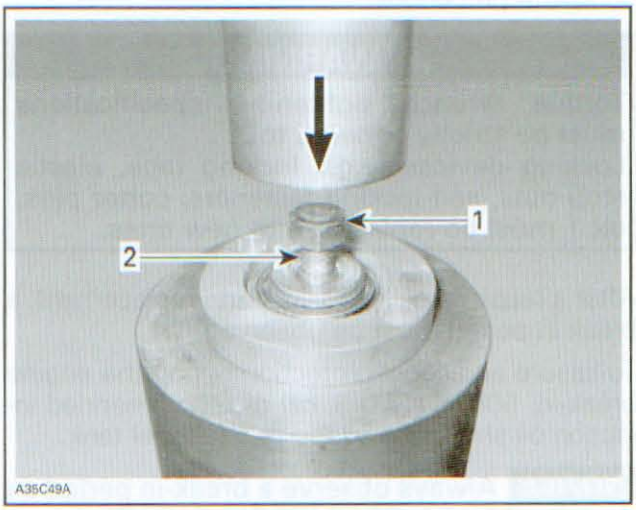

1. M8 nut
2. Shaft

NOTICE When removing water/oil pump shaft, always replace ceramic seal **no. 9** and oil seal **no. 10**. Ceramic seal cannot be removed without damage.

Pry inner part of ceramic seal **no. 9** out.

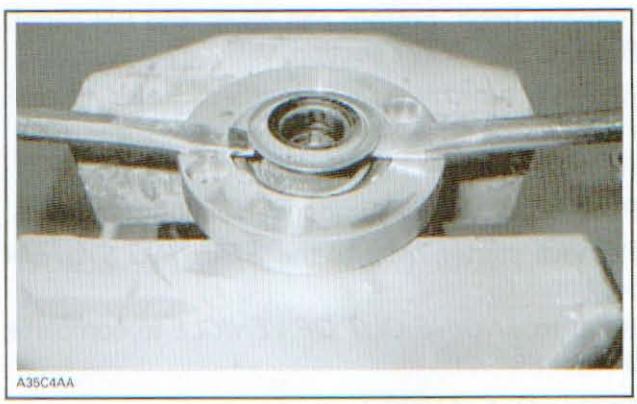

Push out bearing **no. 11** from the bearing housing using an appropriate pusher.

www.midwestmanuals.com

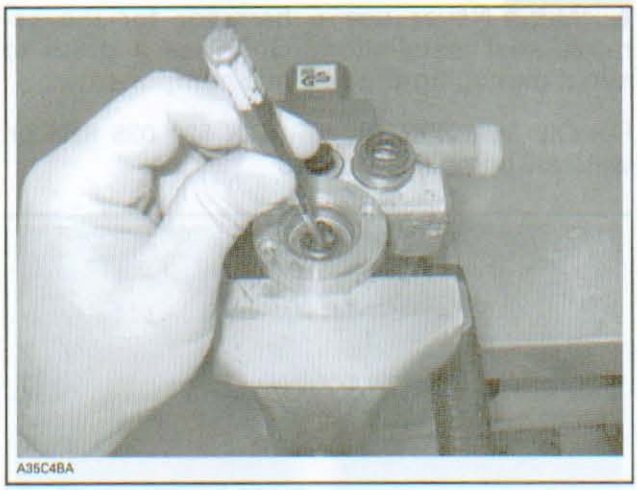
A35C4BA

Push oil seal **no. 10** out.

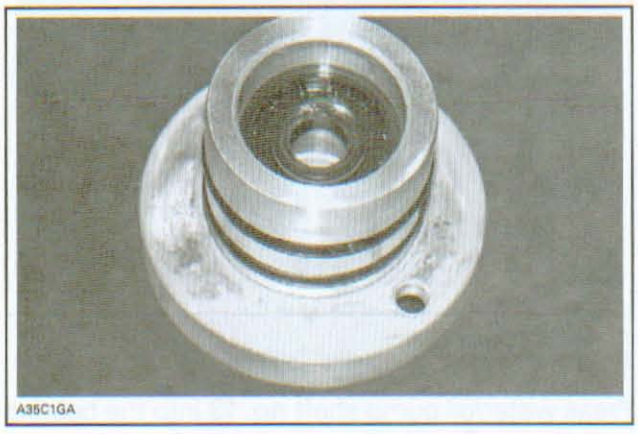
A35C1GA

Carefully press the outer part of ceramic seal out.

NOTE: Use a mandrel with a diameter of approximately 16 mm (.63 in).

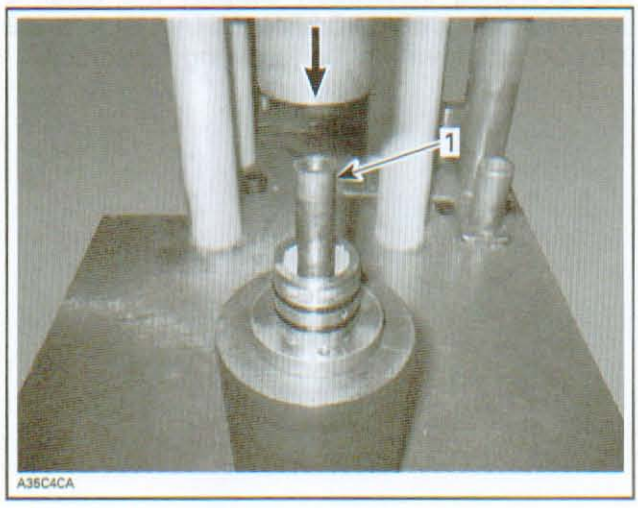

A35C4CA

1. 16 mm (.63 in) mandrel

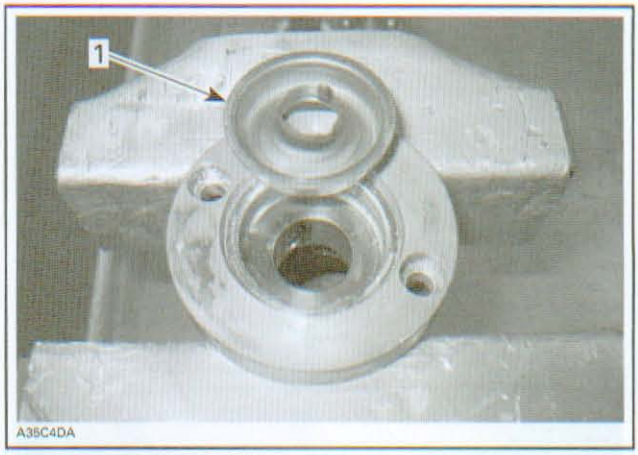

A35C4DA

1. Outer part of ceramic seal

Remove sealant from bearing housing with sand paper no. 180.



A35C4EA

1. Remove sealant

To extract bearing **no. 12** either use a hammer puller or an appropriate pusher.

Water/Oil Pump Shaft Assembly

Reverse disassembly procedure and pay attention to the following.

NOTE: Never put oil in the press fit area of the oil seal and ceramic seal.

Push the new oil seal **no. 10** in bearing housing using the OIL SEAL PUSHER (P/N 529 035 757).

www.midwestmanuals.com

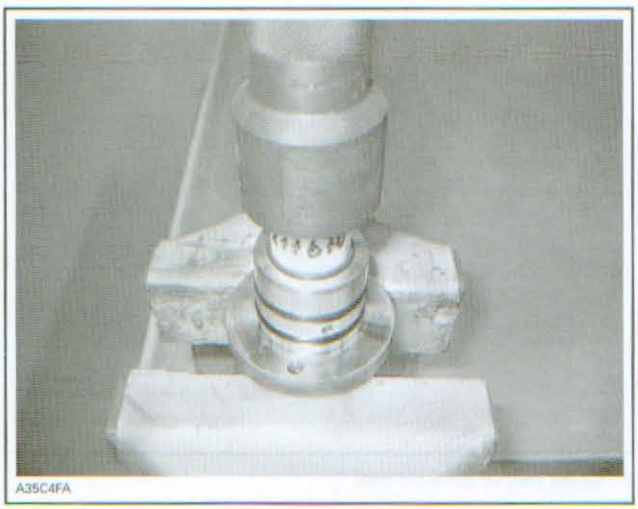
A35C4FA

Press bearing **no. 11** into bearing housing **no. 8**.

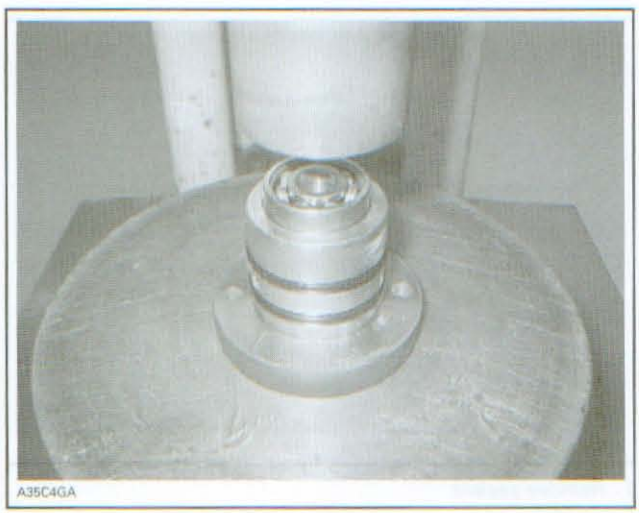
A35C4GA

Push the new ceramic seal **no. 9** in bearing housing **no. 8** using the CERAMIC SEAL INSTALLER (P/N 529 036 014).

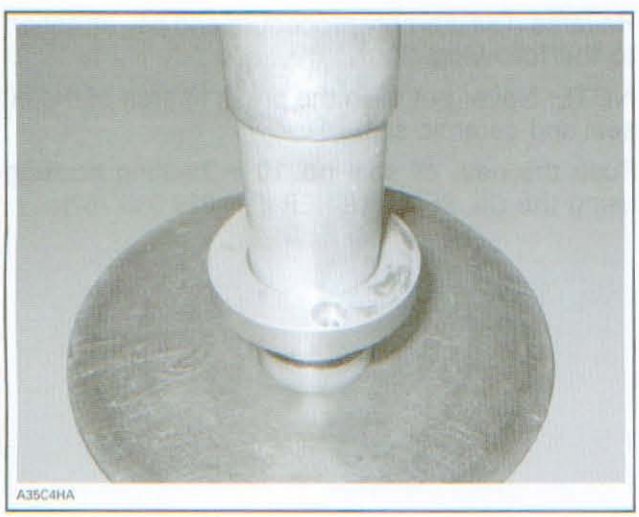
A35C4HA

NOTICE Never use a hammer for the ceramic seal installation. Only use a press to avoid damaging the ceramic component.

Put OIL SEAL PROTECTOR (P/N 529 035 822) on water/oil pump shaft **no. 13**.

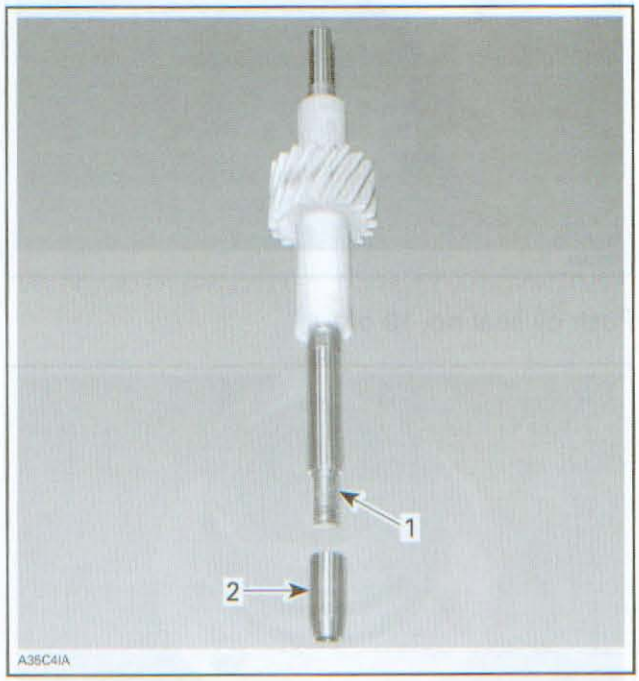

A35C4IA

1. Water/oil pump shaft
2. Oil seal protector

Press water/oil pump shaft **no. 13** into the bearing housing **no. 8** with the appropriate force.

NOTICE **Inadequate force will damage the oil seal no. 10 and bearing no. 11.**

NOTE: During installation support the ceramic seal using the CERAMIC SEAL INSTALLER (P/N 529 036 014) as shown on the following illustration.

www.midwestmanuals.com

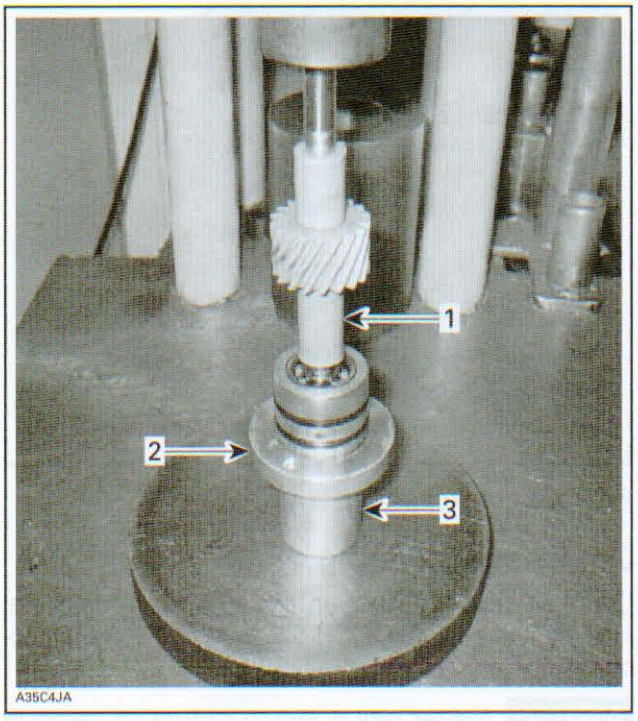

1. *Water/oil pump shaft*
2. *Bearing housing*
3. *Ceramic seal installer*

Remove oil seal protector from water/oil pump shaft.

Water/Oil Pump Shaft Installation

Pour 50 ml (1.7 U.S. oz) of injection oil in the pan under worm gear to lubricate pump gearing.

Install water/oil pump shaft assembly in crankcase while turning shaft to mesh gears.

Torque bearing housing screws **no. 7**.

NOTE: The washer behind the impeller is thicker than on other engines. Ensure to use the 1 mm (.039 in) thick washer.

After impeller installation, ensure shaft turns properly.

Torque water pump housing screws in a criss-cross sequence.

Reinstall oil injection pump.

CRANKCASE

Crankcase Disassembly

Remove engine from vehicle. Refer to *ENGINE REMOVAL AND INSTALLATION* section.

Remove cylinder head and cylinder-block. Refer to *TOP END (797)* section.

Remove magneto housing. Refer to *MAGNETO SYSTEM* section.

Remove drive pulley. Refer to *DRIVE SYSTEM AND BRAKE*.

Remove PTO oil seal cover **no. 1**.

NOTE: Tap screw heads to break the Loctite bond or use a SNAP-ON MANUAL IMPACT DRIVER (P/N PIT120).

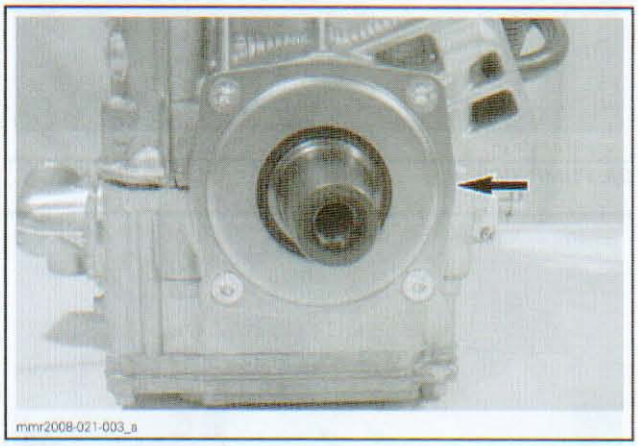

Remove base plate.

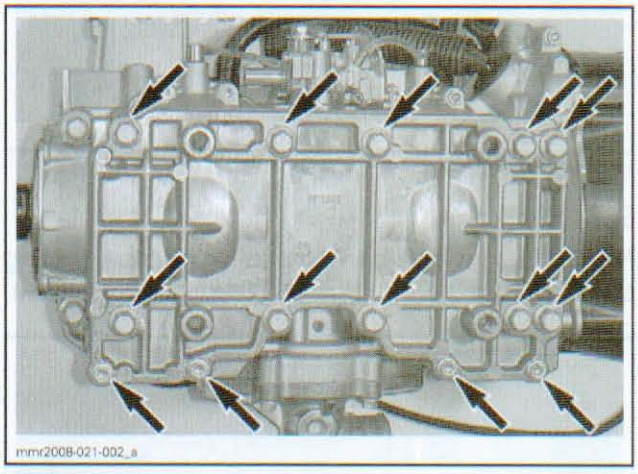

NOTICE **Whenever base plate is removed, crankcase must be opened, cleaned, and re-sealed.**

Remove engine front supports.

Remove all crankcase screws.

www.midwestmanuals.com

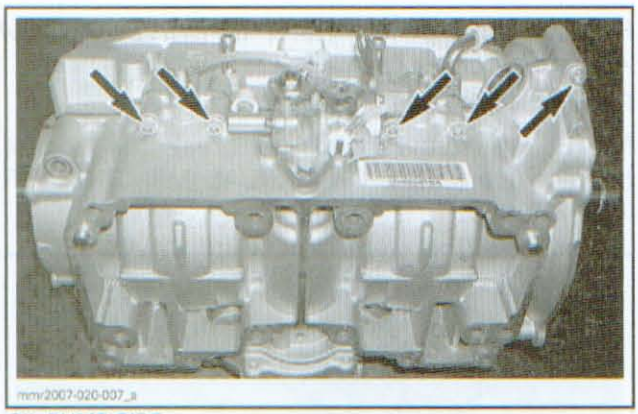

OIL PUMP SIDE

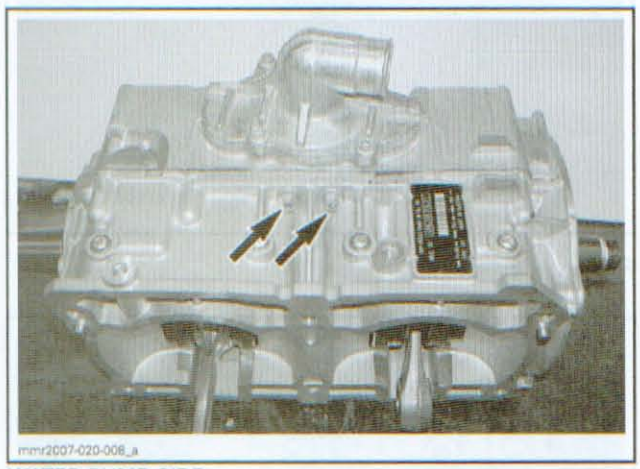

WATER PUMP SIDE

Split crankcase.

NOTE: To prevent damage to crankcase mating surfaces, use prying lugs to "unstick" crankcase.

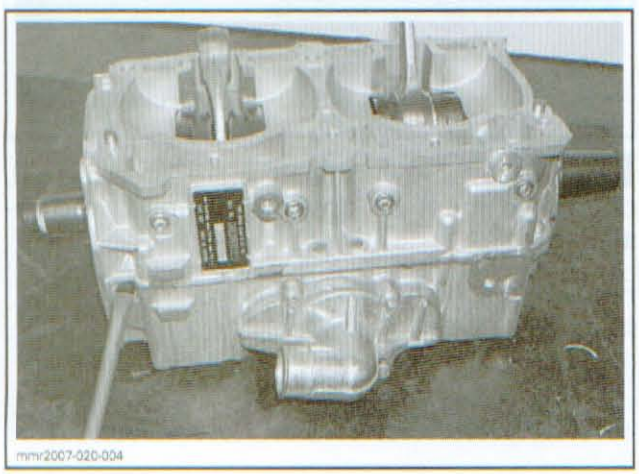

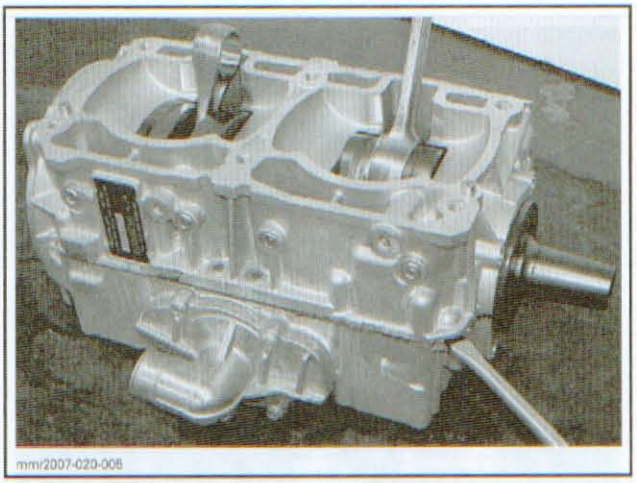

Remove crankshaft assembly.

Crankcase Cleaning

Clean all metal components in a non-ferrous metal cleaner. Use LOCTITE CHISEL (P/N 413 708 500) accordingly.

NOTICE Never use a sharp object to remove sealant as score marks incurred are harmful to crankcase sealing.

Crankcase Inspection

Check crankcase for cracks or other damages. Replace if necessary.

Crankcase Assembly

Install crankshaft in lower crankcase. See *CRANKSHAFT* for procedure.

Apply LOCTITE 5910 (P/N 293 800 081) on crankcase halves as per following procedure.

IMPORTANT: The total assembly sequence, including sealing compound application and crankcase torquing, must be performed within 10 minutes.

Use a plexiglass plate and apply some sealant on it. Use a 50 - 75 mm (2 - 3 in) soft rubber roller and spread the sealant to get a thin uniform coat on the plate (spread as necessary). When ready, apply the sealant on crankcase mating surfaces.

www.midwestmanuals.com

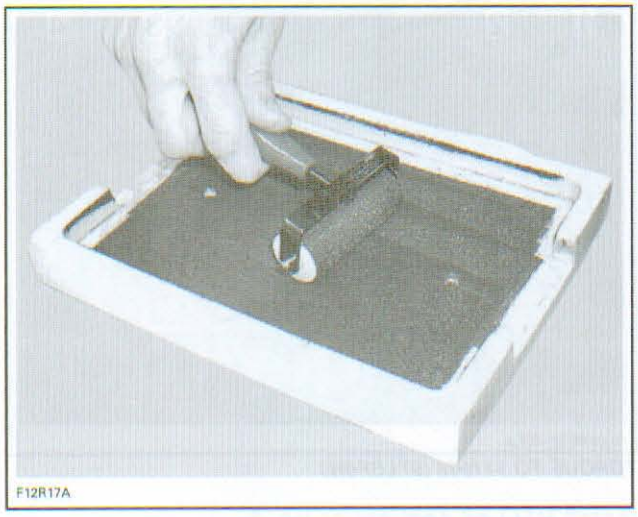
F12R17A

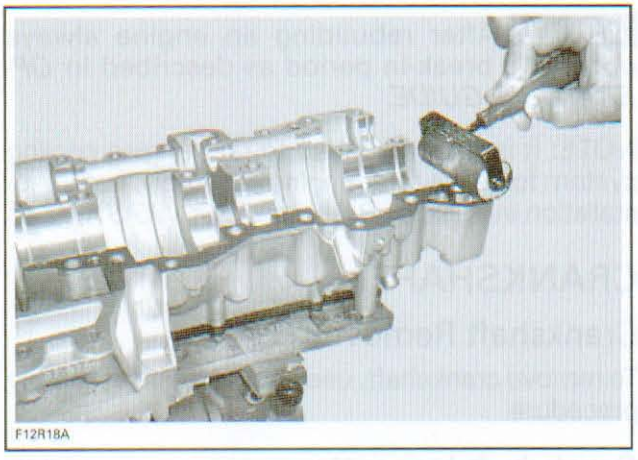
F12R18A

TYPICAL

NOTE: If you do not use the roller method, you may use your finger to uniformly distribute the sealant.

Spread a small bead of sealant around the water passage groove as illustrated.

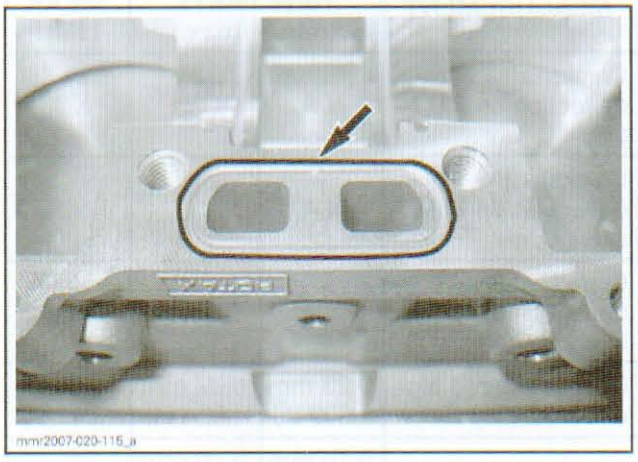
mmr2007-020-115_a

Ensure dowel pins are in their holes.

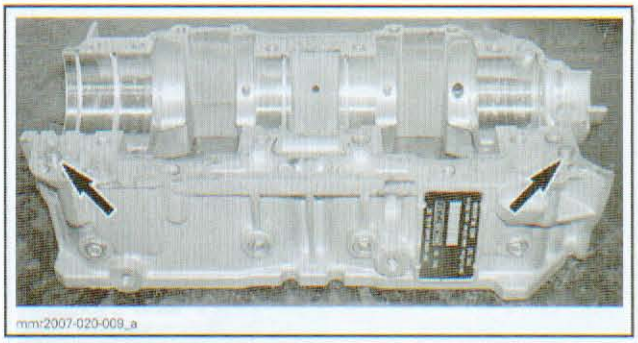
mmr2007-020-009_a

Assemble both crankcase halves.

Install M6 screws in crankcase. Torque to11 N•m (97 lbf•**in**) as per illustrated sequence.

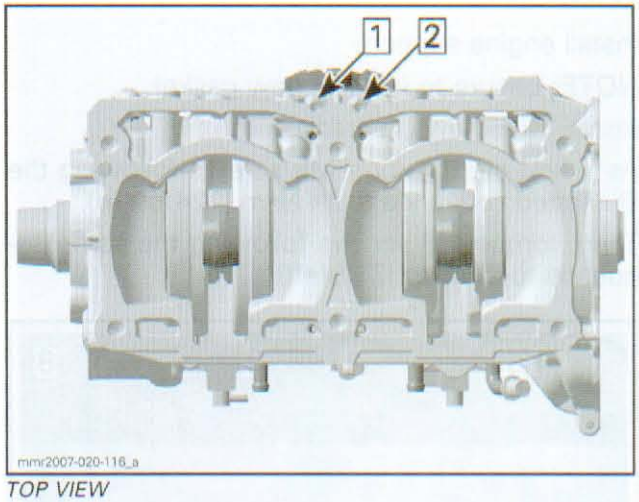

mmr2007-020-116_a

TOP VIEW

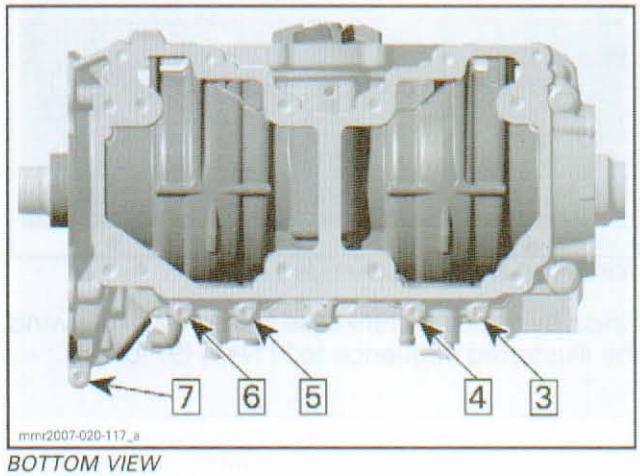

mmr2007-020-117_a

BOTTOM VIEW

Ensure dowel pins are in their holes.

www.midwestmanuals.com

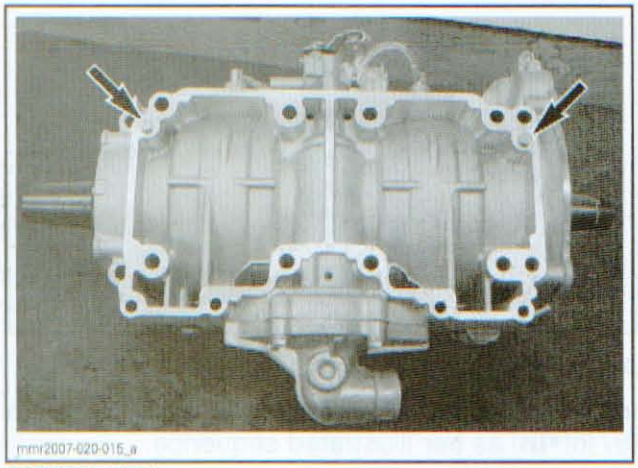

BOTTOM VIEW

Install engine support.

NOTE: Ensure to install a new gasket.

Install M8 screws in crankcase.

As a first step, torque M8 screws following the illustrated sequence to 14 N•m (124 lbf•**in**).

Then, torque M8 screws following the same sequence to 29 N•m (21 lbf•ft).

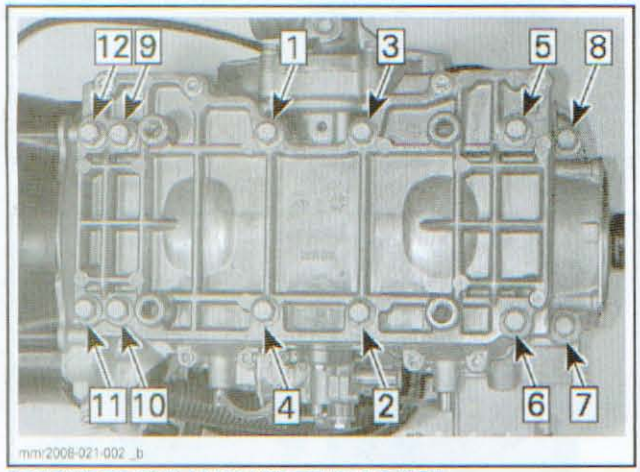

TORQUE TO 29 N•M (21 LBF•FT) IN 2 STEPS

Finish by torquing crankcase M6 screws following the illustrated sequence to11 N•m (97 lbf•**in**).

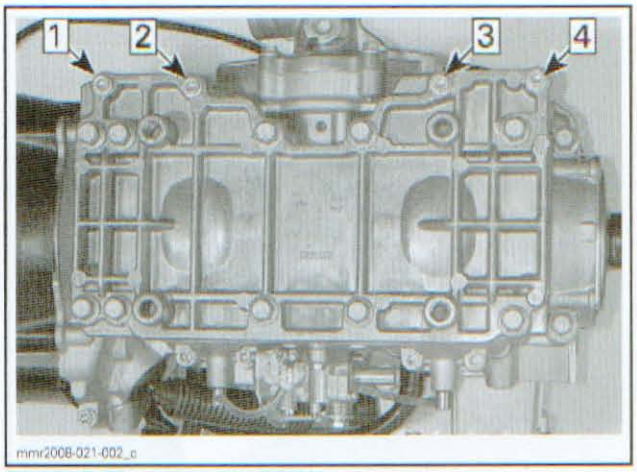

*TORQUE TO 11 N•M (97 LBF•**IN**)*

Install PTO oil seal cover **no. 1**.

NOTICE After rebuilding an engine always observe a break-in period as described in *OPERATOR'S GUIDE*.

NOTE: It is recommended to test engine cooling system for leaks after engine assembly, before installation in vehicle. Refer to *COOLING SYSTEM*.

CRANKSHAFT

Crankshaft Removal

To remove crankshaft, use crankcase disassembly procedure.

Crankshaft Inspection

Refer to table below to find bottom end engine dimension specifications. For dimension measurement procedures, refer to *ENGINE MEASUREMENT*.

ENGINE MEASUREMENT	TOLERANCES		
	NEW PARTS (min.)	(max.)	WEAR LIMIT
Crankshaft deflection on PTO side	N.A.	0.06 mm (.002 in)	N.A.
Crankshaft deflection on MAG side	N.A.	0.05 mm (.002 in)	N.A.
Crankshaft deflection in center of crankshaft	N.A.	0.04 mm (.002 in)	N.A.
Connecting rod big end axial play	0.23 mm (.009 in)	0.62 mm (.024 in)	1.20 mm (.047 in)
Crankshaft end-play	0.10 mm (.004 in)	0.30 mm (.012 in)	N.A.

www.midwestmanuals.com

Crankshaft Bearing Removal

NOTE: 10 minutes is required to heat up a new bearing for its installation, To save time, it is recommended to start the heating process prior to bearing removal operation. See procedure further.

To remove bearings **no. 2** and **no. 3** from crankshaft **no. 4**, install proper half rings and puller ring on the outer bearing.

NOTE: On MAG side, position tools on inner bearing and pull out both bearings together.

PART	MAG SIDE	PTO SIDE
Half rings	420 977 475	420 977 479
Puller ring	420 977 490	420 977 494
Crankshaft protector	420 876 557	420 877 414

Ensure to position bearing pin between half ring gap.

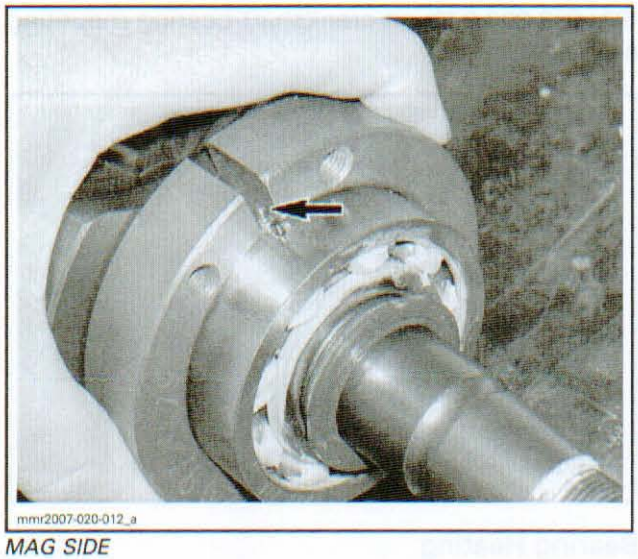

MAG SIDE



PTO SIDE
1. *Half ring*
2. *Puller ring*

NOTE: Apply some grease on crankshaft end to hold in place the proper crankshaft protector.

Using SCREWS (P/N 420 840 681), install BEARING PULLER (P/N 529 036 004) on the half rings.

Secure the bearing puller in a vise by one of its rib.



BEARING PULLER SECURED IN THE VISE

NOTICE **Never use any air impact tool for tightening the puller bolt. Lubricate the bolt with XP-S LUBE (P/N 293 600 016) to avoid damaging the threads.**

Screw in the puller bolt until the bearing comes out.

Follow the same procedure for the inner bearing (PTO side).

NOTE: As an alternate method to remove bearings, use SNAP-ON BEARING SEPARATOR (P/N CJ 951) or SPX/OTC BEARING SEPARATOR (P/N 1124). Use a press to remove bearings.

www.midwestmanuals.com

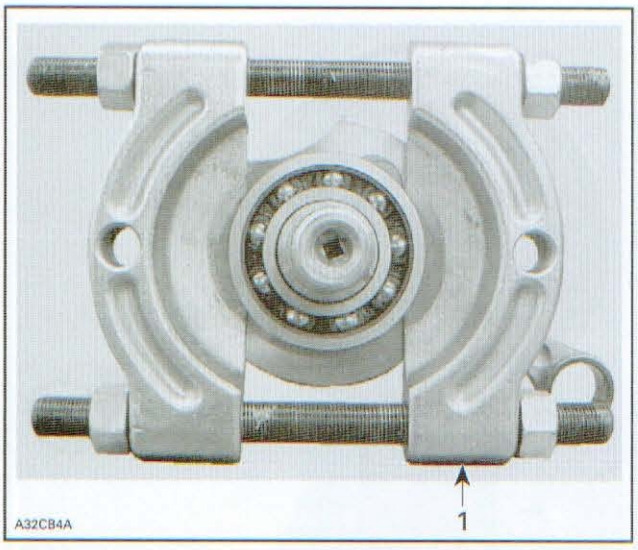

1. Bearing separator

Crankshaft Bearing Installation

Inspect crankshaft ends for damage.

Clean crankshaft ends with sand paper no. 180 to remove possible seal marks and debris.



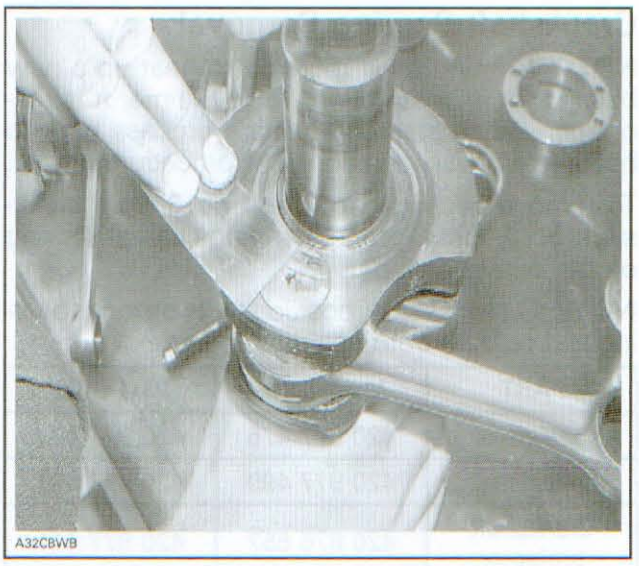

Remove all residue using PULLEY FLANGE CLEANER (P/N 413 711 809).

Smear LOCTITE 767 (ANTISEIZE LUBRICANT) (P/N 293 800 070) on crankshaft bearing mounting area.

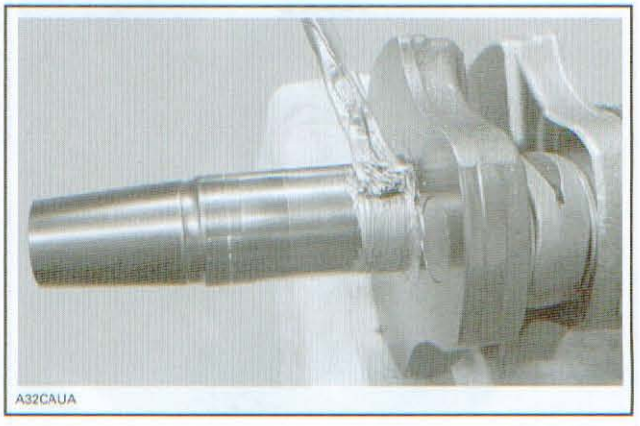

Bearing Heating

Heat up the bearing(s) using BEARING HEATER (P/N 529 035 969). This will expand bearings and ease installation. If required, put a suitable plate or shim to avoid the direct contact between the integrated seal with the heating surface.

www.midwestmanuals.com



NOTICE Bearing(s) should not be heated to more than 80°C (176°F). Do not heat bearing(s) with direct flame, or with a heat gun or soaked in a heated oil bath. Inappropriate bearing(s) heating may result in inner seals or cage failure.

For even heat distribution, turn bearing several times during heating process.

NOTE: Two bearings can be heated at the same time on one bearing heater.

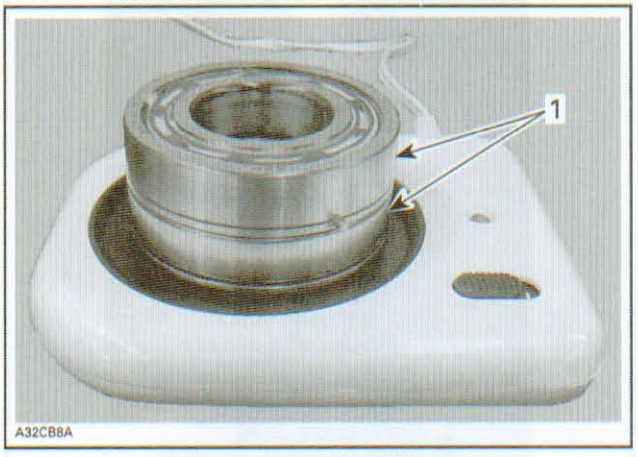

1. Bearings

Probe the side of the inner race of the bearing with the temperature INDICATOR STICK (P/N 529 035 970). Stick will liquefy when the bearing reaches the proper temperature.

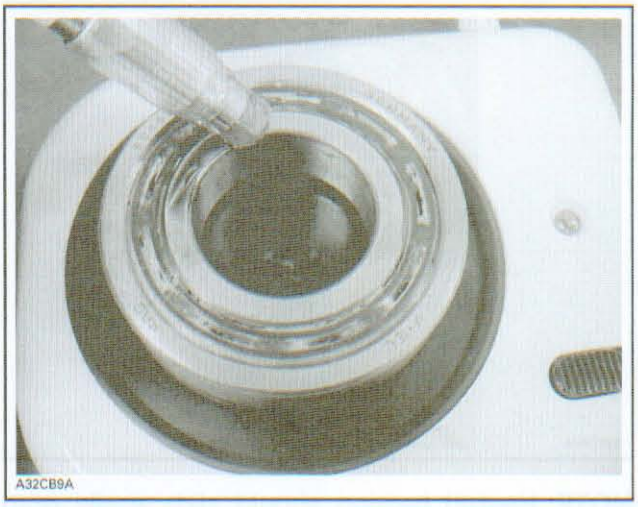

⚠ WARNING

Do not touch heated bearing with bare hands. Always wear heat resisting gloves before handling the heated bearing(s).

NOTICE Never reinstall a bearing that has been removed.

PTO Side Bearings

Install PTO bearings on crankshaft so that locating pins will be positioned as shown.

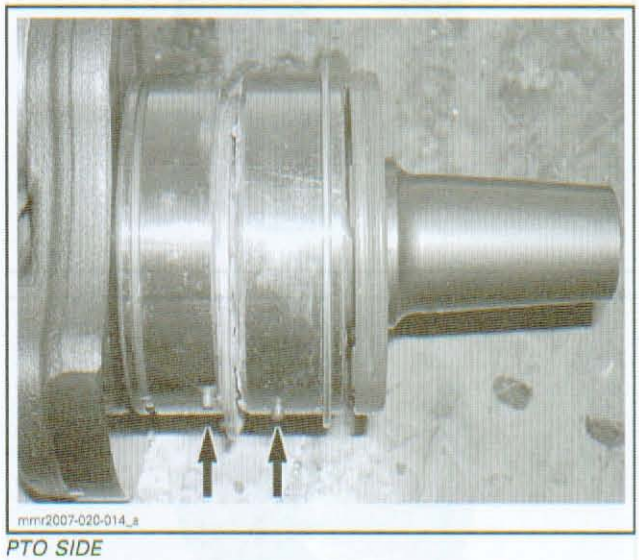

PTO SIDE

Slide the heated inner PTO bearing on crankshaft until it bottoms on crankshaft shoulder.

www.midwestmanuals.com



NOTE: Heated bearing should slide easily onto the crankshaft. If required, push with a steel tube on the inner race of the bearing.

Install retaining disc.

Install DISTANCE GAUGE (P/N 529 036 060) as shown.





TYPICAL

Slide the heated outer PTO bearing onto the crankshaft until it contacts the distance gauge.

MAG Side Bearings

Install MAG bearings on crankshaft so that locating pins will be positioned as shown.

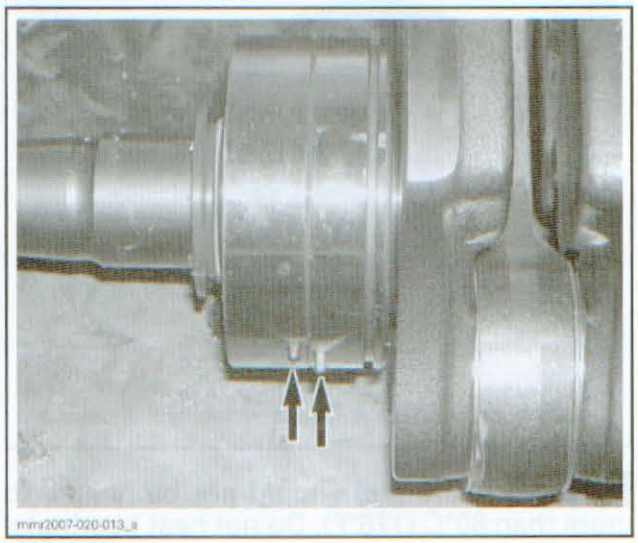

MAG SIDE

Slide the inner MAG bearing until it bottoms on crankshaft shoulder.

NOTE: Heated bearing should slide easily onto the crankshaft. If required, push with a steel tube on the inner race of the bearing.



Slide the outer bearing until it sits on inner bearing.

www.midwestmanuals.com



Crankshaft Installation

At crankshaft installation, position locating pins in their recess as illustrated.

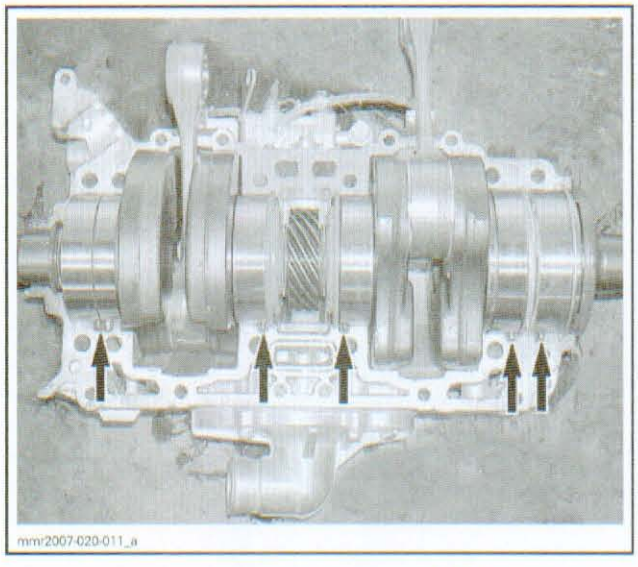

Pay attention to properly locate MAG seal in its groove.

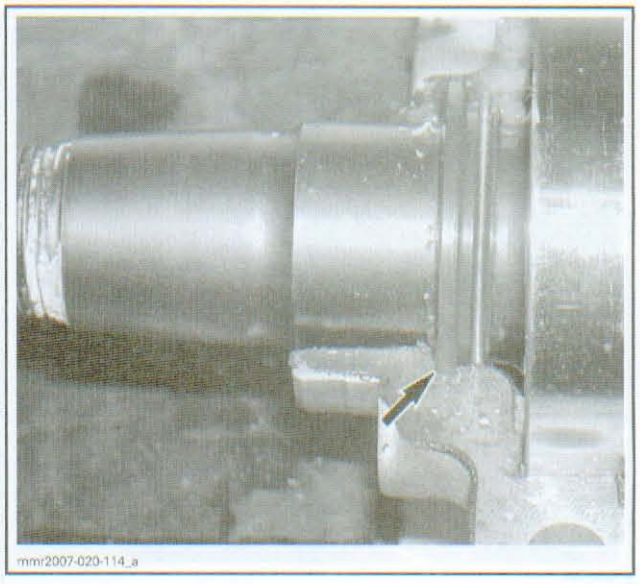

Pour 50 ml (1.7 U.S. oz) of injection oil in the oil bath under worm gear as shown.

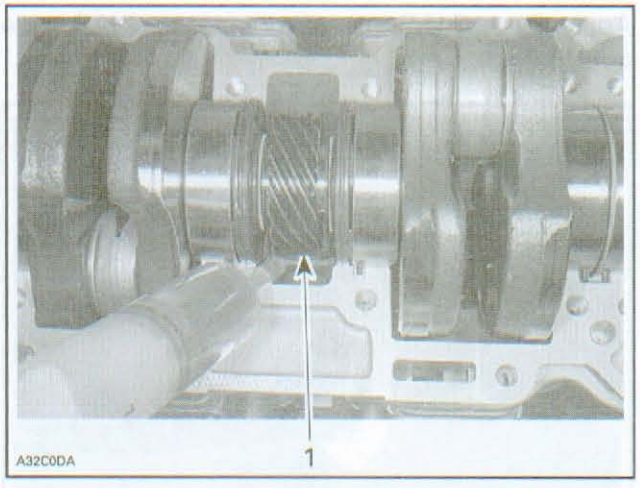

TYPICAL
1. Oil bath

Apply ISOFLEX GREASE (P/N 293 550 021) as per following procedure:

NOTICE Use only the recommended grease. Make sure not to push grease between the outside bearing race and the crankcase half.

Put approximately 25 ml (.8 U.S. oz) of grease in a syringe.

NOTE: The 50 g tube corresponds to 50 ml of grease.

NOTICE Do not exceed the recommended amount of grease.

With the syringe, fill the PTO side outer bearing with 19 ml (.6 U.S. oz) of grease.

www.midwestmanuals.com

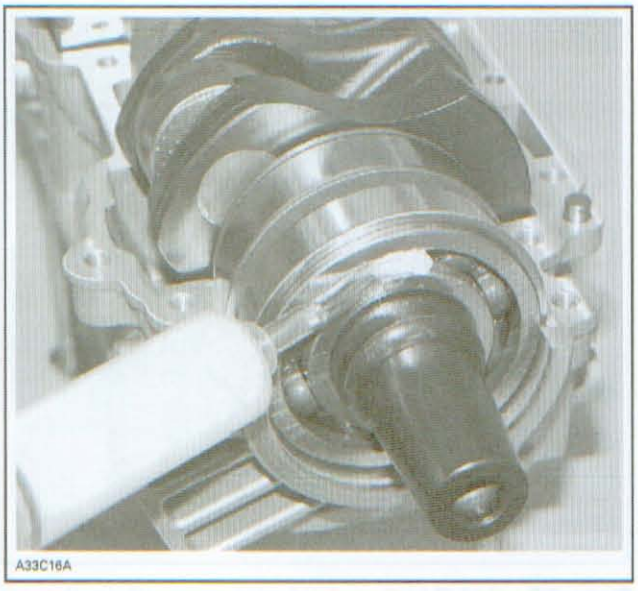
A33C16A

NOTE: Inner PTO bearing is already filled with grease (about 8 ml (.3 U.S. oz).

Apply 5 ml (.2 U.S. oz) of grease to MAG side outer bearing.

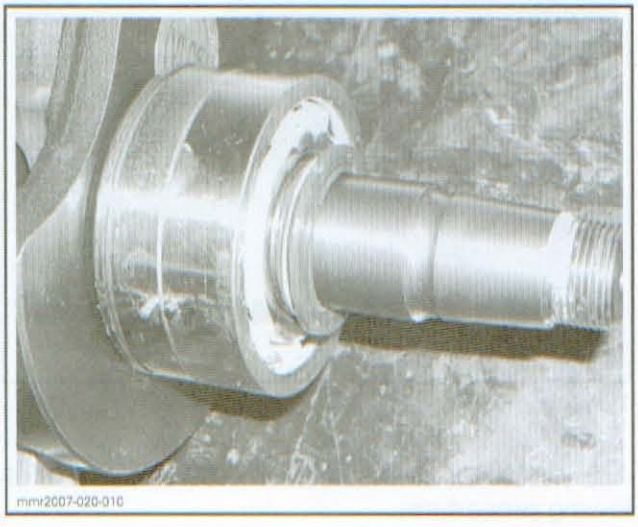
mmr2007-020-010

NOTE: Inner MAG bearing is already filled with grease (about 5 ml (.2 U.S. oz)).

Install MAG seal.

Proceed with crankcase assembly. Refer to *CRANKCASE*.

www.midwestmanuals.com

OVERVIEW (500SS/600)

GENERAL

SYSTEM DESCRIPTION

The engine management system (EMS) controls the following main systems:

- Ignition system
- Rotax Electronic Reverse (RER)
- Starting system (electric start models)
- Digitally Encoded Security System (DESS).

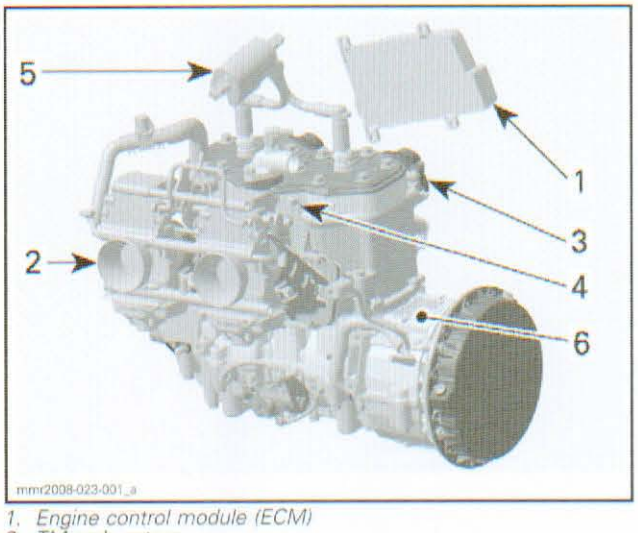

1. *Engine control module (ECM)*
2. *TM carburetors*
3. *RAVE valves*
4. *Coolant temperature sensor (CTS)*
5. *Ignition coil*
6. *Trigger coils (2)*

The EMS also offers a monitoring system and diagnostic mode to help troubleshooting some problems. Refer to *MONITORING SYSTEM/FAULT CODES* section.

Engine Control Module (ECM)

The engine control module (ECM) is the brain of the engine management system.

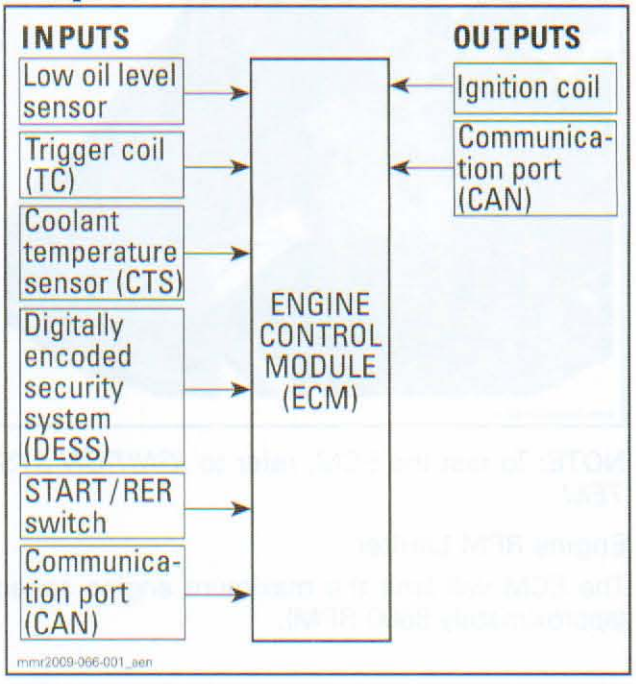

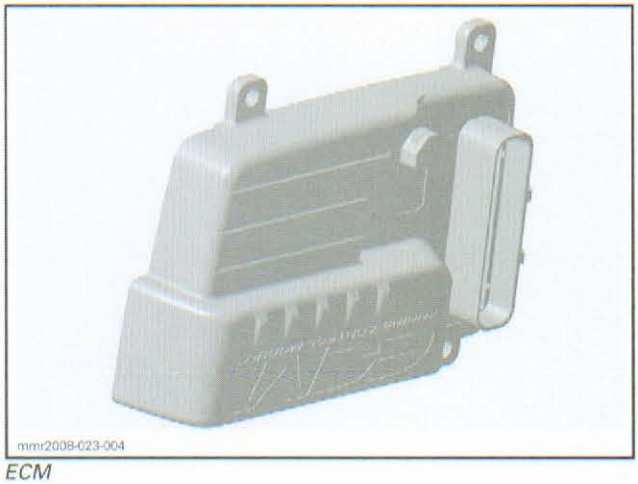

ECM

The ECM and the multifunction gauge communicate together through the CAN lines (Controller Area Network).

The ECM is located under the hood.

www.midwestmanuals.com

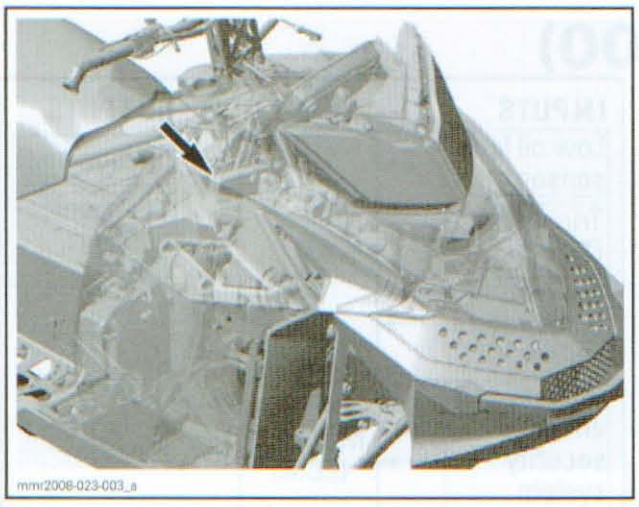

NOTE: To test the ECM, refer to *IGNITION SYSTEM*.

Engine RPM Limiter

The ECM will limit the maximum engine speed (approximately 8600 RPM).

www.midwestmanuals.com

OVERVIEW (600 HO E-TEC)

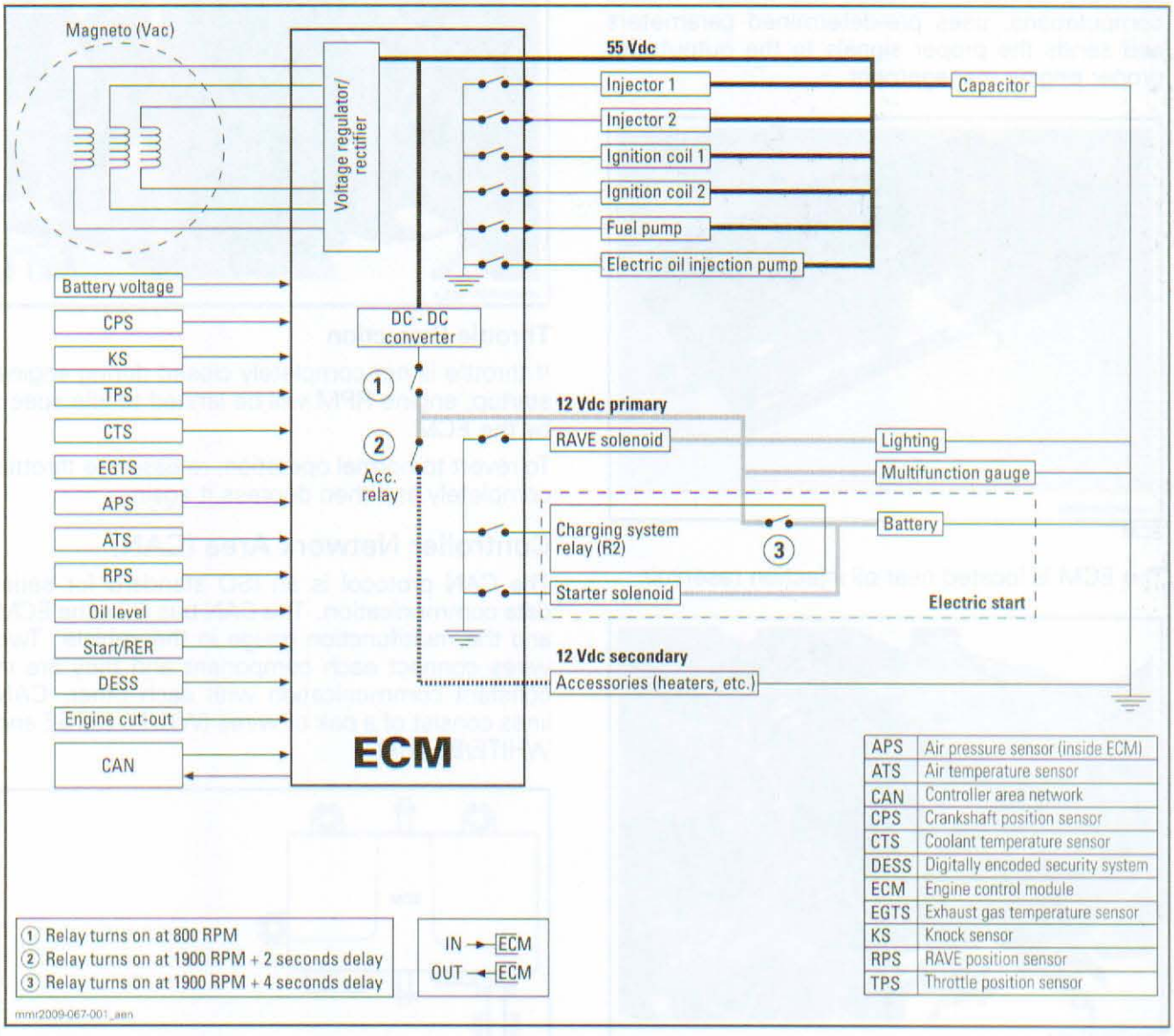

GENERAL

SYSTEM DESCRIPTION

A highly advanced engine management system (EMS) has been used on this 2-stroke engine to ensure a high power output with a clean combustion with practically no exhaust smoke.

There are 8 main systems that are controlled by the engine management system (EMS):

1. E-TEC Direct fuel injection
2. Ignition system
3. Starting system
4. Rotax electronic reverse (RER)
5. Digitally encoded security system (DESS)
6. Lubrication system
7. 3D RAVE
8. Electrical accessories.

The engine management system features a monitoring system that self-diagnoses its electronic components. For more information, refer to *MONITORING SYSTEM/FAULT CODES*.

The power distribution is also controlled by the engine management system.

www.midwestmanuals.com

Engine Control Module (ECM)

The ECM is the central point of the engine management system. It reads the inputs, makes computations, uses pre-determined parameters and sends the proper signals to the outputs for proper engine management.

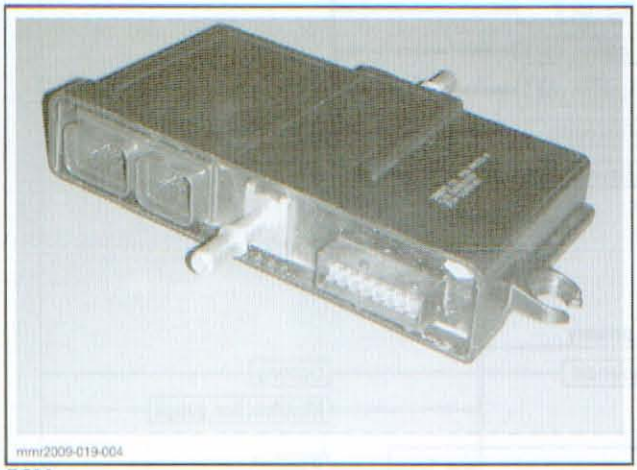

ECM

The ECM is located near oil injection reservoir.

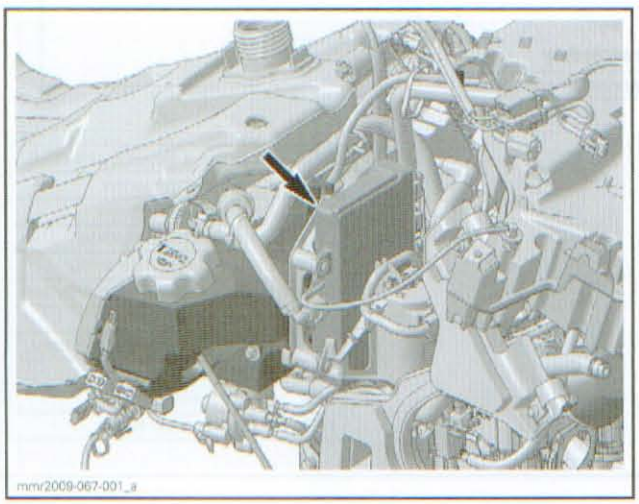

The ECM features a permanent memory that will keep the fault codes, customer information and other engine information when the engine is stopped.

ECM Cooling

Since the ECM manages all the vehicle power needs and incorporates the voltage regulator/rectifier ant other power components, a lot of heat needs to be dissipated.

The constant fresh fuel flow from fuel pump is used to cool down the ECM.

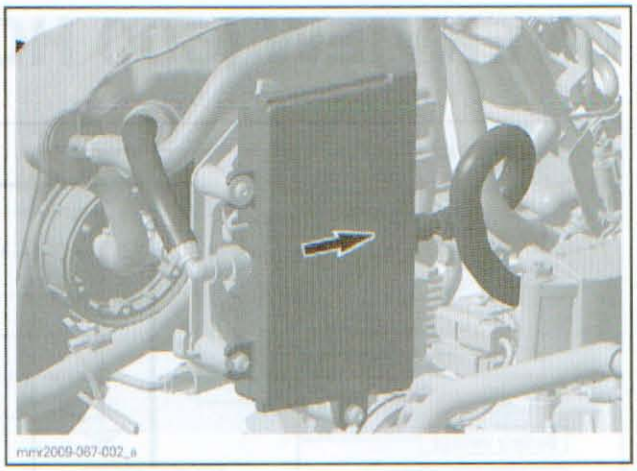

Throttle Protection

If throttle is not completely closed during engine startup, engine RPM will be limited to idle speed by the ECM.

To revert to normal operation, release the throttle completely and then depress it again.

Controller Network Area (CAN)

The CAN protocol is an ISO standard for serial data communication. The CAN bus links the ECM and the multifunction gauge in the vehicle. Two wires connect each component and they are in constant communication with each other. CAN lines consist of a pair of wires (WHITE/BEIGE and WHITE/BLACK).

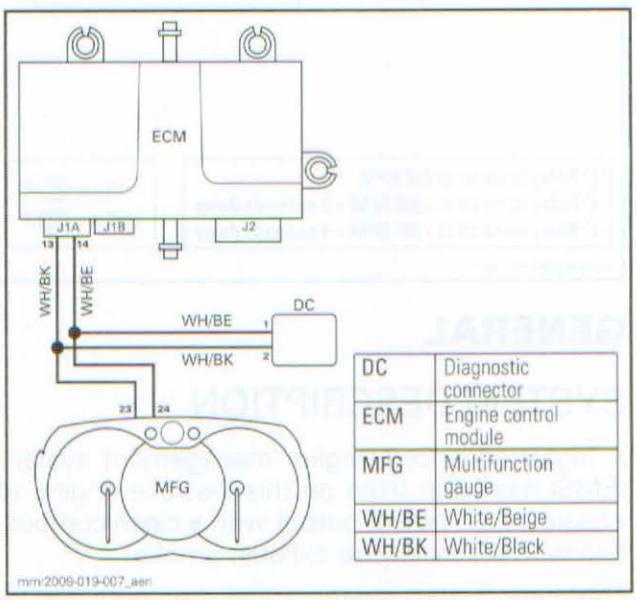

DC	Diagnostic connector
ECM	Engine control module
MFG	Multifunction gauge
WH/BE	White/Beige
WH/BK	White/Black

Fault codes are broadcasted to the CAN bus and can be displayed in B.U.D.S.

www.midwestmanuals.com

POWER DISTRIBUTION

Overview

The E-TEC technology is a batteryless system. On electric-start models, the battery is only used to supply the electric starting system.

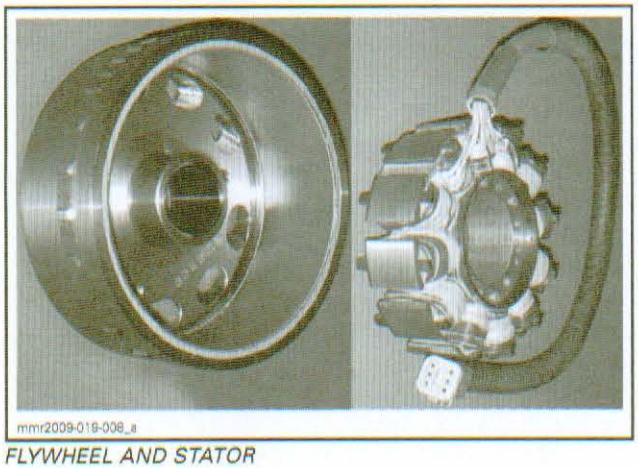

FLYWHEEL AND STATOR

A 1200 W magneto is used.

The flywheel is ventilated to cool down the temperature generated by the high power stator.

The stator is wired with 3 independent windings that works in phase. Each winding is separately wound, they are not connected, so 6 windings go to the ECM.

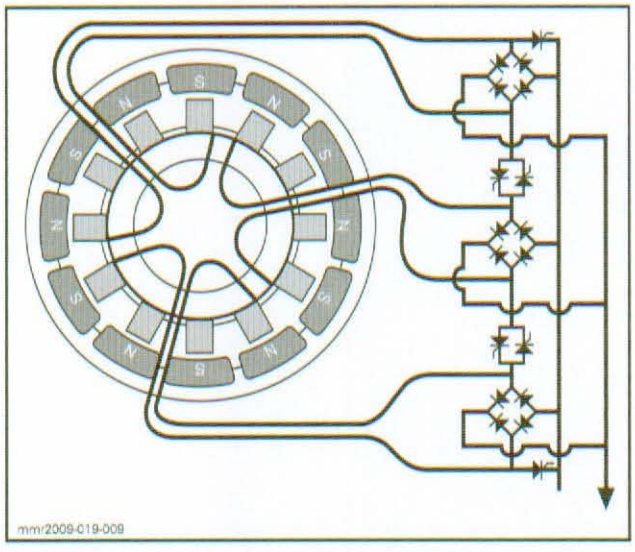

The EMS requires high voltage at low RPM and high current at higher RPM. To achieve this the stator windings are connected in series at low RPM to increase voltage and then connected in parallel at higher RPM to increase current. This series- parallel switch is done in the ECM. Now the electrical requirements of the EMS can be satisfied.

The series to parallel switching occurs at approximately 1500 RPM.

At high RPM if the magneto power is greater than the loads, the ECM will shunt the stator windings to regulate its power as necessary.

The voltage regulator/rectifier is part of the ECM.

The ECM receives the energy produced by the magneto and rectifies the alternating current (AC) to direct current (DC) and regulates the voltage to 55 Vdc and 12 Vdc.

System Voltage (55 Vdc)

Since the available power is low when cranking, the ECM first supplies 55 Vdc to the components that mandatory need voltage for the starting and the basic operation of the engine:

- ECM (internally powered to a lower voltage)
- Fuel pump
- Fuel injectors
- Ignition coils
- Electronic oil injection pump.

A large capacitor is used to stabilize the 55 Vdc system to provide a constant power to the injectors.

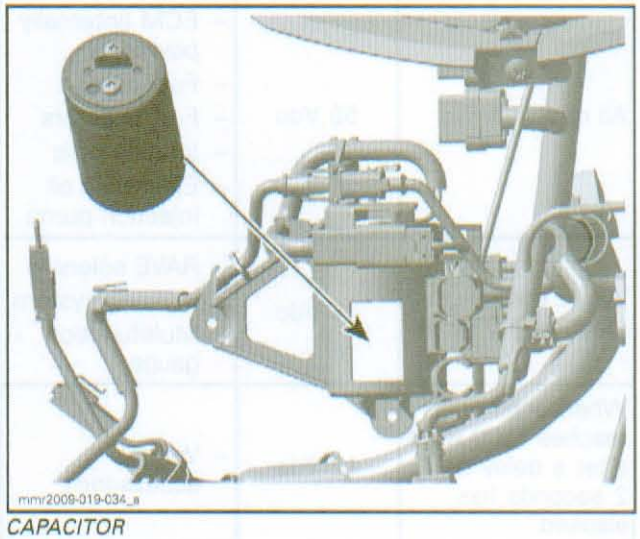

CAPACITOR

System Voltage (12 Vdc)

The 12 Vdc voltage is divided in a primary and a secondary system to distribute current to the engine and vehicle as the power becomes available from the magneto when engine speed increases. This is necessary to prevent a system overload that would lower the power available to the 55 Vdc system. A staged power delivery is used.

www.midwestmanuals.com

Primary Voltage (12 Vdc)

Since the available power is not at its maximum at the early stage of engine starting, the ECM supplies 12 Vdc to the components that are critical for the engine and vehicle when engine reaches 800 RPM.

- RAVE solenoid
- Lighting system
- Multifunction gauge.

On electric start models, when the engine speed reaches 1900 RPM and after a delay of 4 seconds has elapsed, the charging system relay (R2) closes and battery charging can take place as required.

Secondary Voltage (12 Vdc)

When the engine speed reaches 1900 RPM and after a delay of 2 seconds has elapsed, the accessory relay inside the ECM closes and power is delivered to the vehicle accessories (handle grip heaters for example).

Power Distribution Summary

ENGINE OPERATION	VOLTAGE DELIVERED	COMPONENT SUPPLIED
All rpm's	55 Vdc	– ECM (internally powered) – Fuel pump – Fuel injectors – Ignition coils – Electronic oil injection pump
When engine reaches 800 RPM	12 Vdc	– RAVE solenoid – Lighting system – Multifunction gauge
When engine reaches 1900 RPM after a delay of 2 seconds has elapsed	12 Vdc	– Vehicle accessories
When engine reaches 1900 RPM after a delay of 4 seconds has elapsed	12 Vdc	– Battery charging

Power Optimization

To efficiently use the available power from the magneto and to solve different electrical requirements, pulse width modulation (PWM) is used. The duty cycle (the time a pulse is ON) is changed as required. Therefore, voltage and current can be modulated where needed and as needed.

www.midwestmanuals.com

OVERVIEW (800R)

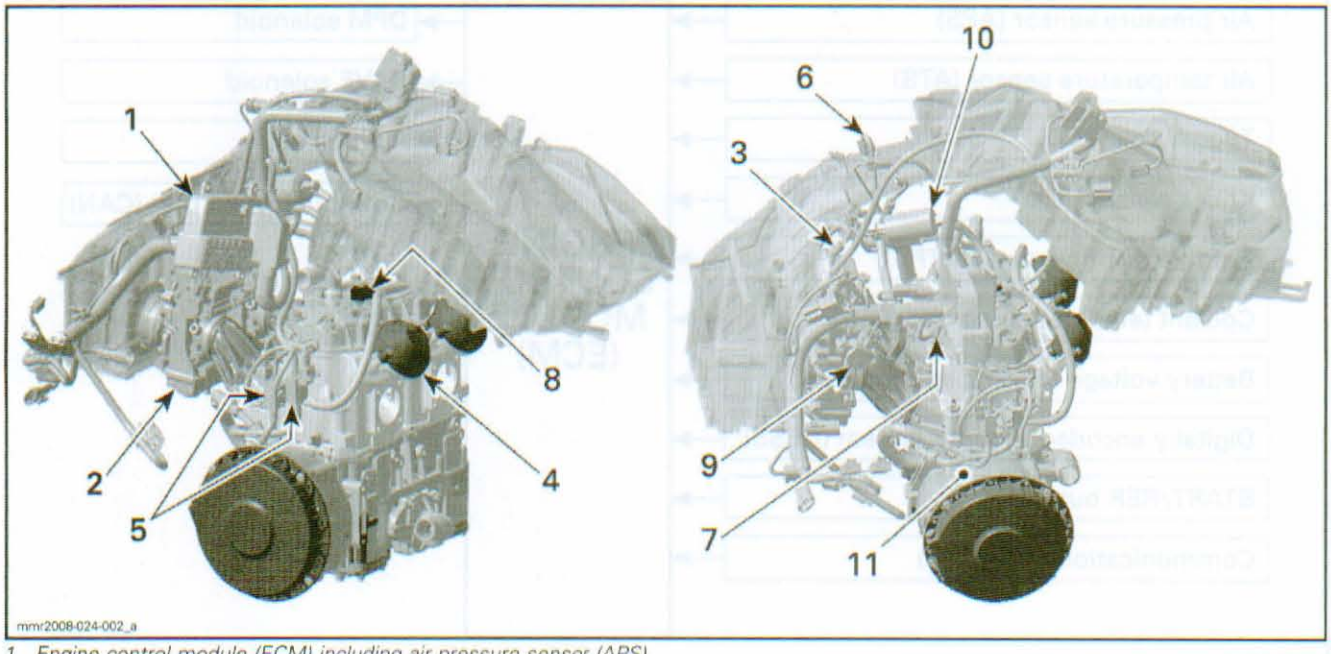

1. Engine control module (ECM) including air pressure sensor (APS)
2. TM carburetors
3. DPM manifold
4. RAVE valves
5. RAVE valve solenoid
6. Air temperature sensor (ATS)
7. Coolant temperature sensor (CTS)
8. Knock sensor (KS)
9. Throttle position sensor (TPS)
10. Ignition coil
11. Trigger coil

www.midwestmanuals.com

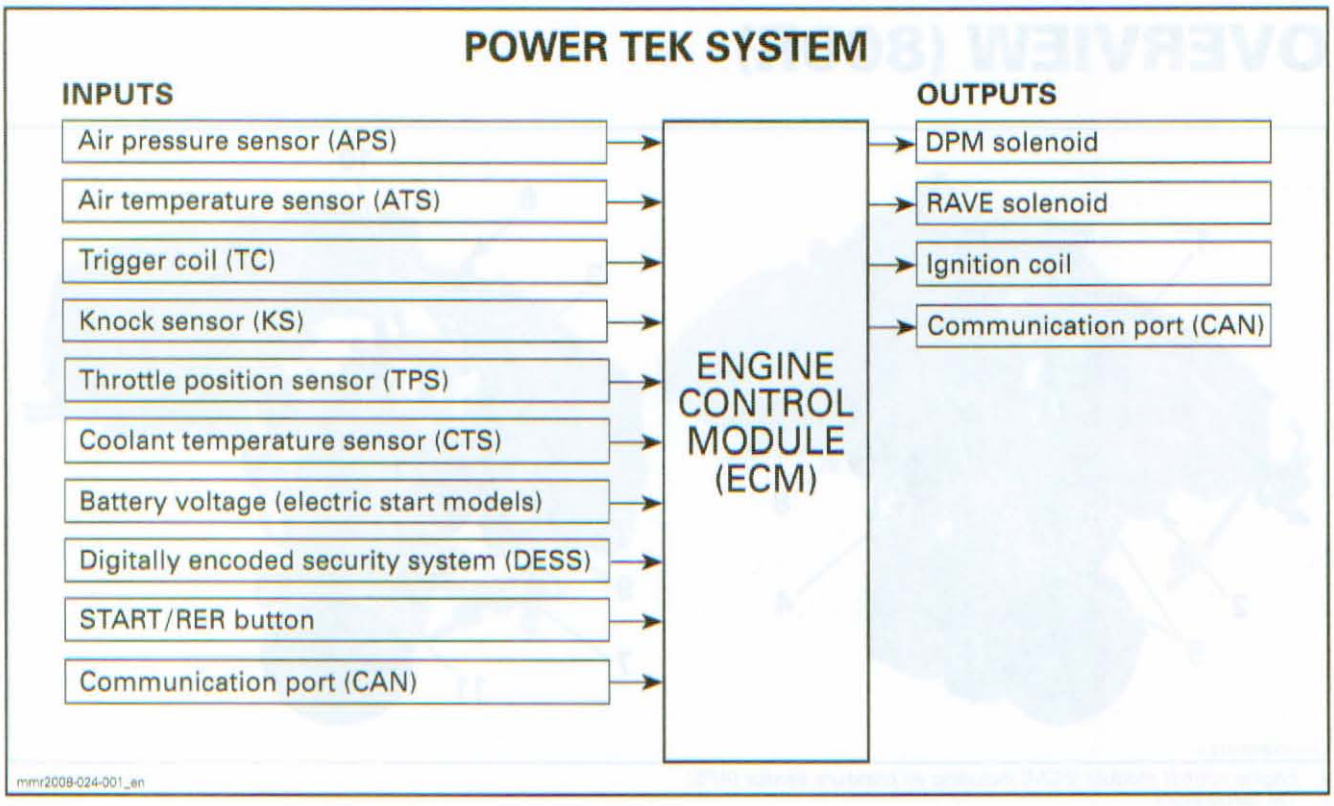

GENERAL

SYSTEM DESCRIPTION

The engine management system (EMS) controls the following main systems:

- Ignition system
- 3D RAVE system
- Digital Performance Management (DPM)
- Rotax Electronic Reverse (RER)
- Digitally Encoded Security System (DESS)
- Starting system (electric start models).

The acronym Power TEK refers to the following technologies found on this engine:

Throttle position sensor

Electronic RAVE

Knock sensor.

The TPS and knock sensor provide inputs to the ECM.

The ECM electronically controls the electric RAVE valve solenoid and the DPM solenoid.

The use of a TPS along with the trigger coils (engine RPM) allows the ECM to recognize the engine load and thus using 3D DPM and ignition maps. This achieves an improved fuel economy, a cleaner engine for emission requirements and improved engine protection (against seizure).

The EMS also offers a monitoring system and diagnostic mode to help troubleshooting some problems. Refer to *MONITORING SYSTEM/FAULT CODES* section for more details.

Engine Control Module (ECM)

The engine control module (ECM) is the brain of the engine management system.

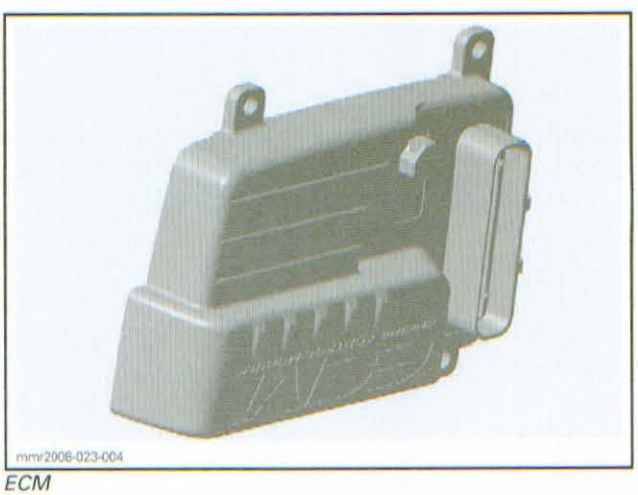

ECM

The ECM applies the proper ignition and DPM maps for optimum engine operation in all riding conditions.

www.midwestmanuals.com

The ECM and the multifunction gauge communicate together through the CAN lines (Controller Area Network).

The ECM is located in the engine compartment.

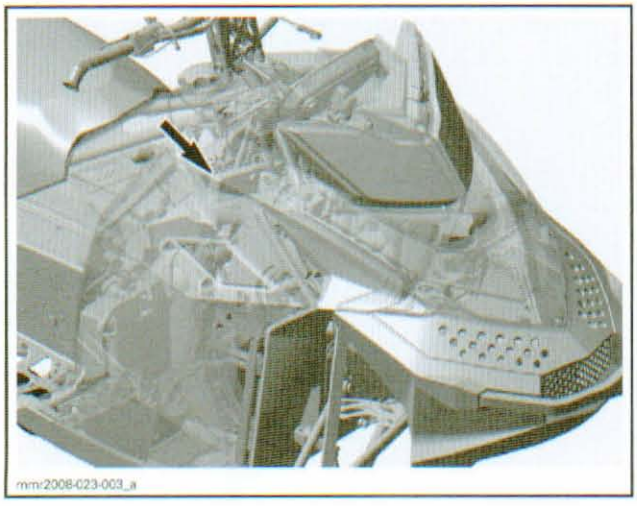

Engine RPM Limiter

The ECM will limit the maximum engine speed (approximately 8600 RPM).

Warm Up Engine Protection

The engine warm up is electronically controlled. The ignition timing, fuel delivery and 3-D RAVE opening are varied to limit power output on a cold engine to reduce the chance of engine damage. This type of limitation is RPM-related and the warm-up period should be seamless.

NOTE: When engine coolant temperature is below 5°C (41°F), the RAVE valves will be kept closed.

Knock Sensor

A knock sensor is mounted on top of the cylinder head. It detects specific vibration that would be typically generated by engine detonation.

When knocking occurs, the ECM temporarily retards ignition timing and enriches fuel mixture until knocking disappears. Then, previous parameters automatically resume as required. Refer to *COMMUNICATION TOOLS AND B.U.D.S. SOFTWARE*.

NOTE: Occasional knocking will not generate a fault code. If knocking occurrence goes over a certain threshold, a fault code will be generated.

Refer to *IGNITION SYSTEM* to test the knock sensor.

www.midwestmanuals.com

www.midwestmanuals.com

COMMUNICATION TOOLS AND B.U.D.S. SOFTWARE

SERVICE TOOLS

Description	Part Number	Page
12 V BATTERY SUPPLY CABLE	529 035 997	209–210
DIAGNOSTIC CABLE	710 000 851	210
DIAGNOSTIC CABLE	710 000 851	209
MPI-2	529 036 018	208, 210
SUPPLY T-HARNESS	529 035 869	208–209
T-HARNESS	529 035 869	210

SERVICE TOOLS – OTHER SUPPLIER

Description	Part Number	Page
OPTIONAL MALE-FEMALE EXTENSION SERIAL CABLE	DB9	208

GENERAL

Refer to *PROCEDURES* for instructions on the communication tools.

If communication problems occur, refer to *TROUBLESHOOTING*.

TROUBLESHOOTING

COMMUNICATION PROBLEMS

MPI-2 Connection Troubleshooting

The MPI-2 includes 2 status lights to show the connection conditions: USB and CAN. **Both lights must be GREEN** so that MPI-2 works properly. Otherwise, refer to the following charts.

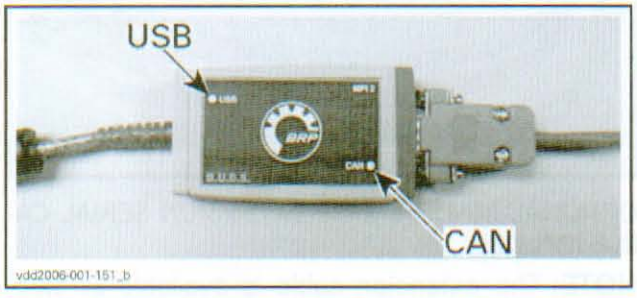

Prerequisite for USB Communication:

- PC Computer turned ON
- MPI-2 connected to PC computer.

COMMUNICATION PROBLEM (USB)	
Status	What to do
Light is OFF	– Check USB connection between MPI-2 and PC computer. – Check USB operation on PC computer (hardware or Windows drivers).

Prerequisite for CAN Communication:

1. MPI-2 connected to diagnostic connector.
2. DESS key is installed on its post.
3. B.U.D.S. started and logged.

COMMUNICATION PROBLEM (CAN)	
Status	What to do
Light is OFF	– Check connection between MPI-2 and diagnostic cable connector. – Check connection between diagnostic cable connector and T-harness. – Check connection between T-harness and diagnostic connector. – Check that battery supply cable is connected to a 12 V battery. – Check that ECM is powered.
Light is RED	– Check CAN wires and connectors on vehicle.

www.midwestmanuals.com

Communication Problems with B.U.D.S.

If one or more "ECU" is (are) not communicating with the MPI. A module may not be powered or is defective. Check to find which module is missing in B.U.D.S. Its tab at the bottom will not be visible. Then check wiring and power supply to that module.

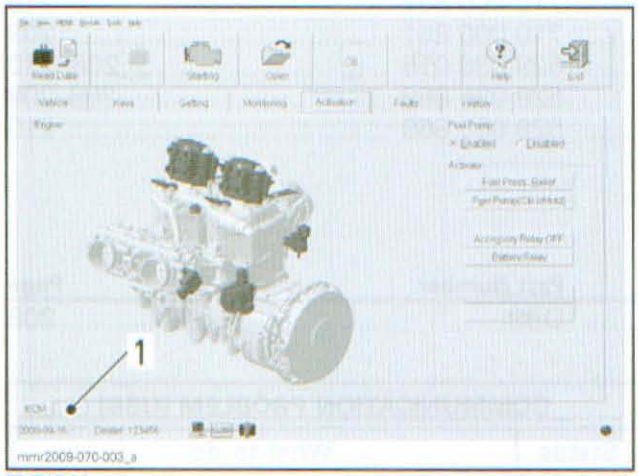

TYPICAL
1. Cluster tab not visible meaning this "ECU" is not communicating

If an "X" is shown, the communication has been lost. Refer to the other *COMMUNICATION PROBLEMS* topics in this section.

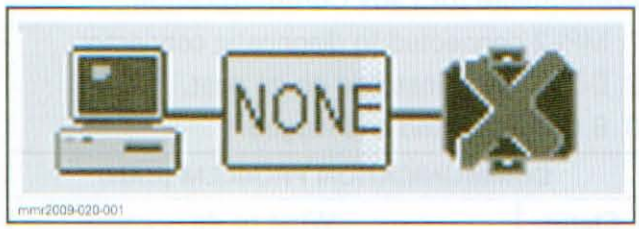

Supply T-Harness Connection Troubleshooting

500SS/600/800R

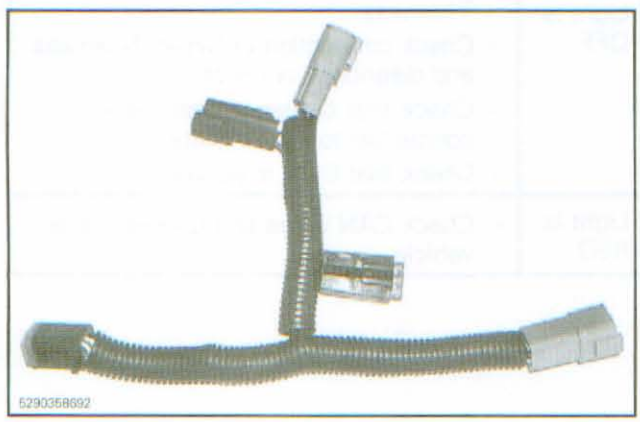

When the SUPPLY T-HARNESS (P/N 529 035 869) is connected to the diagnostic connector and powered by a 12 V battery, the engine can not be started as the connections set the ECM in diagnostic mode.

If the engine can abnormally be started with the T-harness connected, some functions will not be available in B.U.D.S. In this case, check the following:

- Fuse of the T-harness. If burnt, check battery condition. A weak battery may cause fuse to blow.
- Diode in the T-harness between pins 4 and 5.
- Damaged wiring or connectors of the T-harness.

PROCEDURES

MULTI-PURPOSE INTERFACE-2 (MPI-2)

The MPI-2 (Multi-Purpose Interface-2) is used with B.U.D.S. software to communicate with the engine management system.

Parts required

MPI-2 (P/N 529 036 018).

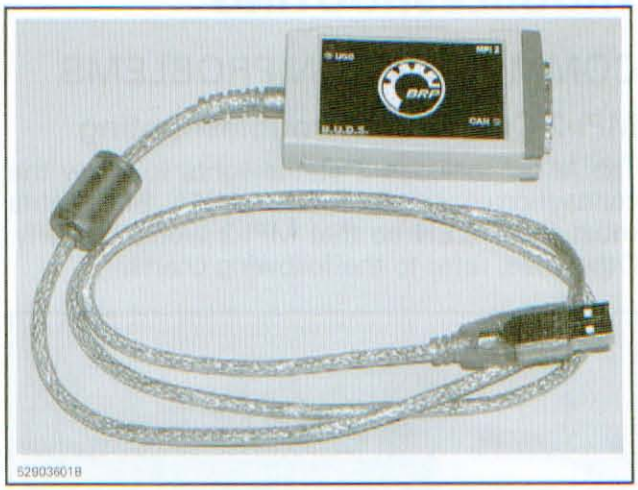

OPTIONAL MALE-FEMALE EXTENSION SERIAL CABLE (P/N DB9)

NOTE: The extension cable is available at electronic retail outlets. Do not exceed 7.6 m (25 ft).

www.midwestmanuals.com

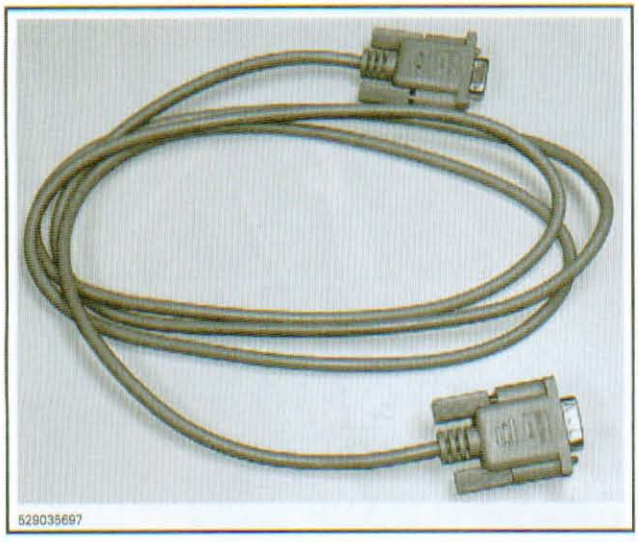

DIAGNOSTIC CABLE (P/N 710 000 851)



SUPPLY T-HARNESS (P/N 529 035 869)

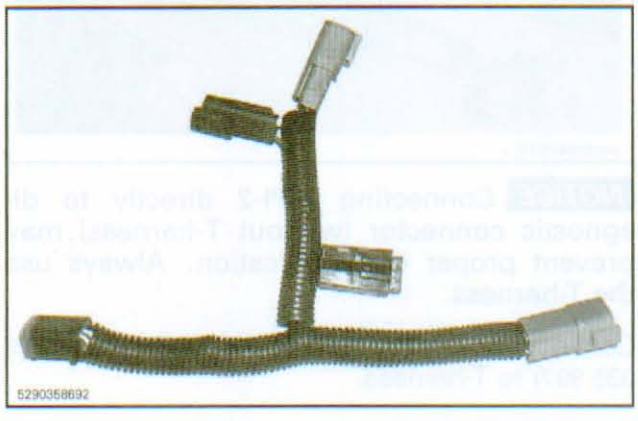

12 V BATTERY SUPPLY CABLE (P/N 529 035 997)



MPI-2 Power Supply

MPI-2

The MPI-2 uses the PC computer USB port for its power supply.

MPI-2 Connections with Vehicle

⚠ WARNING

If the computer you are using is connected to the power outlet, there is a potential risk of electrocution when working in contact with water. Be careful not to touch water while working with the computer.

NOTE: Some components will generate heat when leaving vehicle in diagnostic mode for a long period. Always disconnect MPI supply harness and supply cable from vehicle/battery when not working on vehicle.

Connect MPI-2 connector to the USB port of a PC (personal computer).

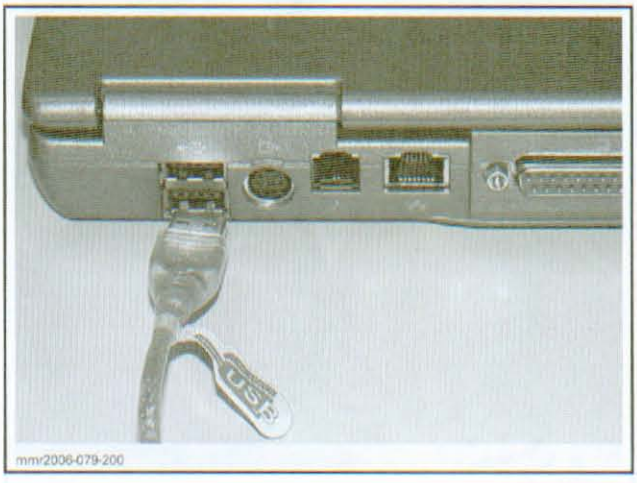

Remove the diagnostic connector from the protective cap on the right side of the vehicle.

www.midwestmanuals.com

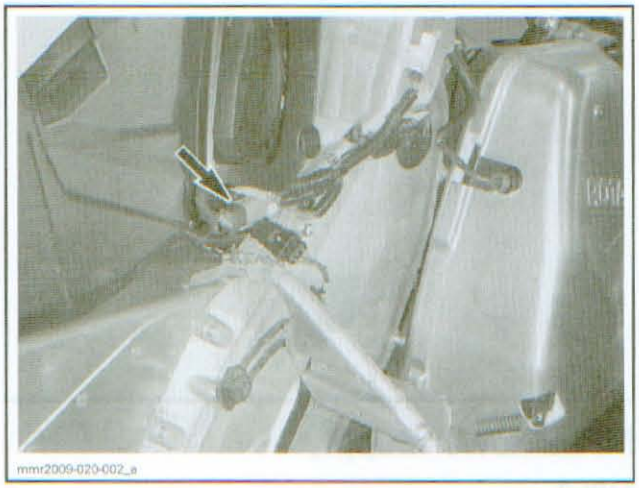

Connect the T-HARNESS (P/N 529 035 869) to diagnostic connector.

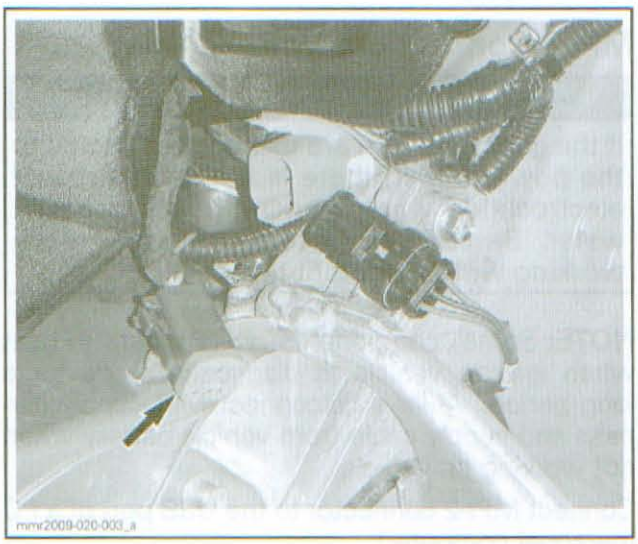

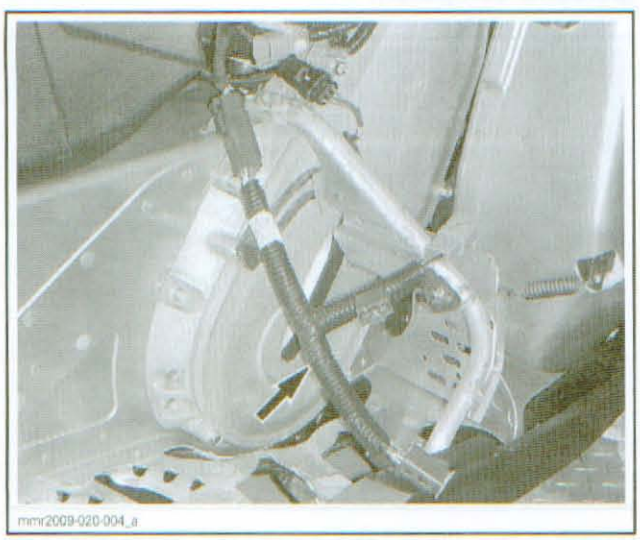

Connect the DIAGNOSTIC CABLE (P/N 710 000 851) to T-harness connector.



Connect the MPI-2 (P/N 529 036 018) to diagnostic cable.



NOTICE Connecting MPI-2 directly to diagnostic connector (without T-harness) may prevent proper communication. Always use the T-harness.

Connect the 12 V BATTERY SUPPLY CABLE (P/N 529 035 997) to T-harness.

www.midwestmanuals.com



Connect the battery supply cable to a 12 V battery.

NOTE: Connect cable clips to vehicle battery if so equipped.



NOTICE Always use the proper supply harness and cables. Make sure to respect polarity when connecting cable clips to battery. Match RED cables together.

Set headlamp to low beam to reduce battery discharge rate.

500SS/600/800R

NOTE: Engine cannot be started in diagnostic mode. Battery supply cable must be disconnected from battery to allow engine starting.

B.U.D.S. SOFTWARE

B.U.D.S. (Bombardier Utility and Diagnostic Software) is designed to allow electrical component inspection, diagnostic options and adjustments such as the closed throttle.

For more information pertaining to the use of the B.U.D.S. software, use its help which contains detailed information on its functions.

Use the latest B.U.D.S. version available on BOSSWeb.

IMPORTANT: Make sure all connections have been made **before starting B.U.D.S.** to allow proper operation.

Reading Data from a Vehicle using the B.U.D.S. Software

Install DESS key on its post.

Start B.U.D.S. and logon.

Select the protocol **Kw2000** in **MPI** under **Choose protocol**.

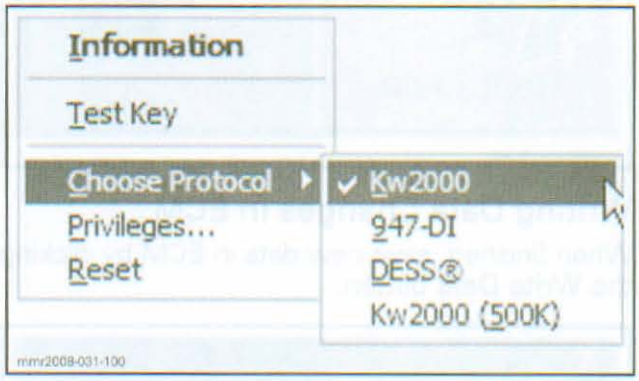

If **No vehicle detected...** message is displayed in B.U.D.S.:

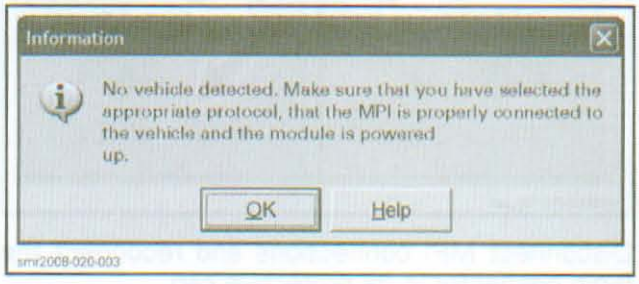

Make sure both USB and CAN lights of MPI-2 are GREEN. Otherwise, refer to *TROUBLESHOOTING* in this section.

Make sure the status bar shows the kW2000 and the number 2 to its right. Otherwise, refer to *TROUBLESHOOTING* in this section.

www.midwestmanuals.com

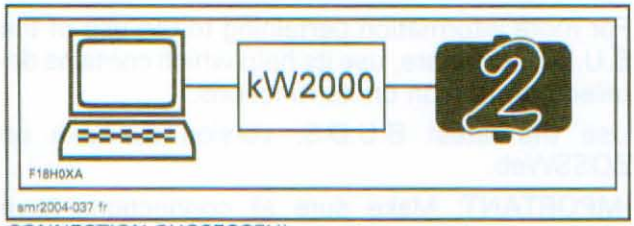

CONNECTION SUCCESSFUL

NOTE: Number 2 indicates that the ECM and the multifunction gauge are recognized by the MPI.

Read ECM by clicking the **Read Data** button.

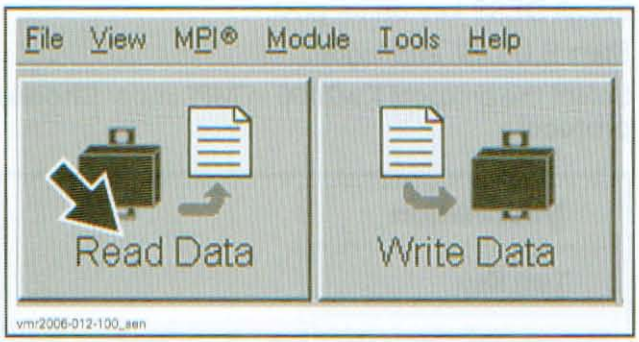

Writing Data Changes in ECM

When finished, save new data in ECM by clicking the **Write Data** button.

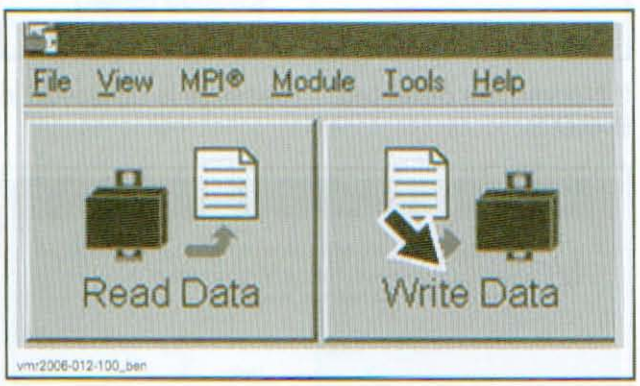

Disconnect MPI connections and reconnect the 6-pin connector in its protective cap.

NOTICE **Failure to secure the diagnostic connector in its protective cap would allow corrosion and damage to the terminals.**

NOTE: There is a 120 Ω resistor in protective cap to minimize the possibility of communication error.

Electronic Modules ("ECU") Update

Whenever B.U.D.S. is started, check if there is an update icon in B.U.D.S. status bar.

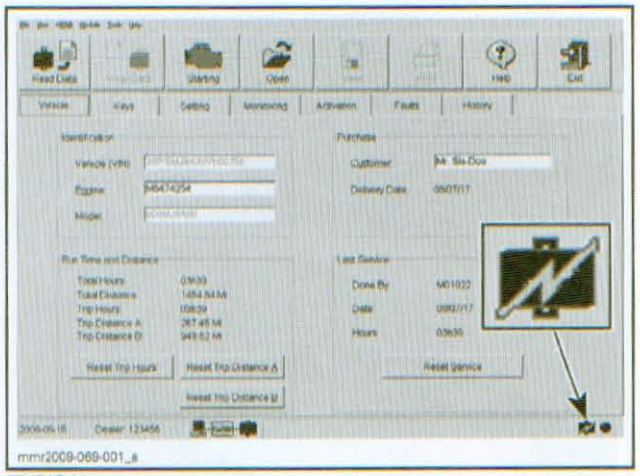

TYPICAL

The icon indicates that a file is available in B.U.D.S. to update any of the following electronic modules: ECM or multifunction gauge.

Use the **Module** menu and check all modules one at a time.

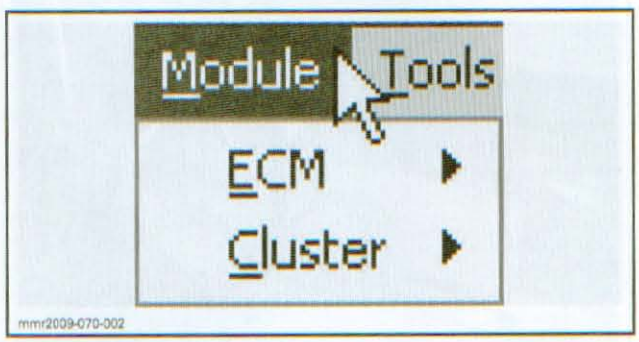

1. If the **Update** option is **greyed out**, no update file is available for this module.
2. If the **Update** option is **black**, an update file is available for this module. Select the update option and load the proper file.

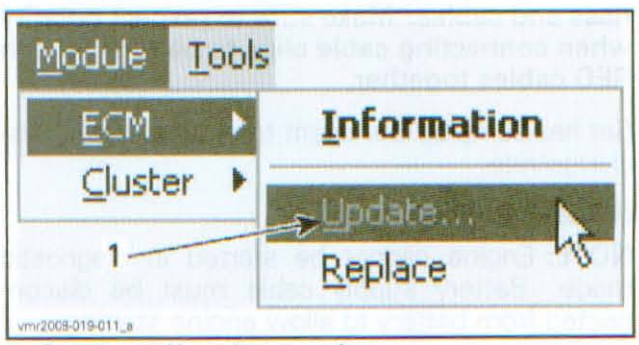

1. *Greyed out: No update to perform*
   Black: Update file available

www.midwestmanuals.com

MONITORING SYSTEM AND FAULT CODES

GENERAL

MONITORING SYSTEM

The EMS features a monitoring system that self-diagnose its electronic components.

When a predefined condition (engine overheat for example) or a fault occurs, the ECM sends a signal to the multifunction gauge and/or audible signals to a beeper to inform you of this particular condition.

The ECM monitors the following functions and components.

500SS/600

COMPONENT
DESS
RER
Low oil level
Engine RPM
Hi engine temperature (turns on @ 80°C (176°F) then turns off @ 75°C (167°F)
CAN
ECM
CTS
Main relay

600 HO E-TEC

COMPONENT
EMS (TPS, CPS, knock sensor, RAVE valve solenoids, APS, ATS, EGTS, RPS, ignition coils and fuel injectors)
12 V overload and 55 V voltage
DESS
RER
Low oil level, electronic oil injection pump
Engine RPM
Coolant temperature
CAN
ECM
CTS
Starter solenoid (electric start models)
Fuel pump
Charging system relay (electric start models)

800R

COMPONENT
EMS (TPS, knock sensor, 3D RAVE valve solenoids, DPM, APS and ATS)
DESS
RER
Low oil level
Engine RPM
Hi engine temperature (turns on @ 85°C (185°F) then turns off @ 80°C (176°F)
CAN
ECM
CTS
Main relay

Limp Home Mode

The ECM may automatically set default parameters to ensure the adequate operation of the vehicle if a component of the engine management system is not operating properly.

www.midwestmanuals.com

NOTE: Sensor failures will not lead automatically to a limp home mode. The check engine LED will turn on and in some cases the beeper.

The engine RPM may be limited if some critical components fail. In this case, releasing throttle and letting the engine returning to idle speed may allow normal operation to come back. If it does not work, try removing and reinstalling the tether cord cap on DESS post.

These performance-reduced modes allow the rider to go back home which would not be possible without this advanced system.

500SS/600

EMS ACTION	CAUSE
Engine is gradually stopped. Beeper sounds for 5 seconds and a shutdown message is displayed in multifunction gauge before shutdown.	Engine overheat protection: – Engine idled more than 5 minutes while engine temperature raised above 85°C (185°F).

600 HO E-TEC

EMS ACTION	CAUSE
Engine is gradually stopped. Beeper sounds for 5 seconds and a shutdown message is displayed in multifunction gauge before shutdown.	Fuel pump wiring short circuit or open circuit.
	Fuel pump current requirement is too high.
	Engine overheat protection: – Engine idled more than 5 seconds while engine temperature raised above 85°C (185°F). – Engine idled more than 5 minutes while engine temperature raised above 37°C (99°F).
Engine speed is limited to 3000 RPM	DESS key is not recognized by the ECM. The antitheft system is active. RAVE valves are kept at closed position.
Engine speed is limited to 5500 RPM (RAVE valves are kept closed)	Oil injection pump wiring short circuit or open circuit.
	Low voltage in the 55 V system. Voltage dropped to 50 Vdc.
	Engine overheat. Engine temperature reached 115°C (239°F).
	Exhaust gas temperature too high. Temperature reached 800°C (1,472°F).
	High engine detonation.
Engine speed is limited to 7000 RPM	Max. RPM allowed to the engine in reverse. RAVE valves are kept closed.
	Max. RPM allowed when engine is cold. Air temperature is below -25°C (-13°F). RAVE valves are kept at mid position. Oil injection pump duty cycle is increased to warm up oil.
	NOTE: When coolant temperature is below 20°C (68°F), RAVE valves are kept at mid position and no RPM limitation takes place. Oil pump works in its usual mode.
Engine speed is limited to 8600 RPM	Maximum engine RPM allowed.

800R

EMS ACTION	CAUSE
Engine is gradually stopped. Beeper sounds for 5 seconds and a shutdown message is displayed in multifunction gauge before shutdown.	Engine overheat protection: – Engine idled more than 5 minutes while engine temperature raised above 85°C (185°F).
Engine speed is limited to 5200 RPM (RAVE valves are kept closed)	Engine overheat: Engine temperature reached 90°C (194°F).

www.midwestmanuals.com

Pilot Lamps

Warning lights in multifunction gauge and/or a beeper provide signals as vehicle operation feedback or to indicate a problem.

Pilot lamp can flash alone or in combination with another lamp.

Beeper codes will be heard and messages (depending on gauge model) will be displayed to catch your attention.

NOTE: Message displayed is not available on all gauges.

500SS/600/800R

PILOT LAMP(S) ON	BEEPER	MESSAGE DISPLAYED	DESCRIPTION
	Fast short beeps	ENGINE	Engine is overheating.
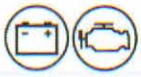	4 short beeps every 2 minutes	LOW BAT	Indicate a low or high battery voltage condition.
		HIGH BAT	
	4 short beeps	CHECK ENGINE	Engine fault.
	4 short beeps every 2 minutes	KNOCK	Engine detonation. – Ensure recommended fuel is used. – Check fuel quality, replace if necessary.
	Continuously beeps	SHUTDOWN	Shutdown procedure in force due to engine overheating problem.
	4 short beeps every 2 minutes	LOW OIL	Injection oil level is low.
	Slow long beeps	REVERSE	Electronic reverse is selected.
	3 short beeps	REV. FAIL	Engine rotation did not change after reverse try, try again.
DESS	Refer to *DESS WARNING SIGNALS* below.		

www.midwestmanuals.com

600 HO E-TEC

PILOT LAMP(S) ON OR FLASHING	BEEPER	DESCRIPTION
	Continuous fast short beeps	Major engine, muffler or ECM overheating.
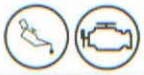	Continuous fast short beeps	Electronic oil injection pump problem.
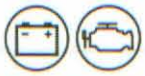	4 short beeps every 2 minutes	Low or high battery voltage or battery charging relay.
	4 short beeps	Minor engine or muffler overheating.
	4 short beeps	Engine management system fault.
	4 short beeps every 2 minutes	High engine detonation.
	Continuously beeps	Engine shutdown procedure due to engine overheating at idle or a fuel pump problem.
	4 short beeps every 2 minutes	Injection oil level is low.
DESS	Refer to *DIGITALLY ENCODED SECURITY SYSTEM (DESS)* section.	

FAULT CODES

A fault code is an indication that a glitch or malfunction is detected by the monitoring system of the vehicle.

When there is a problem, the EMS (engine management system) can provide fault codes to ease the troubleshooting.

The faults registered in the ECM (engine control module) are kept when the battery is disconnected.

Many fault codes at the same time is likely to be burnt fuse(s), a faulty relay or a problem with the vehicle wiring harness.

When using the service action suggested in the **Fault** section of B.U.D.S., a system circuit referred to as DA-26 or J1A-26 for instance, means connector "A" on the ECM and the pin 26.

IMPORTANT: After a problem has been solved, ensure to clear the fault(s) in the ECM using the B.U.D.S. software. This will properly reset their states.

How to Read Fault Codes Using B.U.D.S. Software

Refer to *COMMUNICATION TOOLS/B.U.D.S. SOFTWARE* section.

For more information pertaining to the faults code status and report, refer to B.U.D.S. online help or to the EMS fault code tables.

How to Read Fault Codes on the Premium Multifunction Gauge

Fault codes can also be displayed in the premium multifunction gauge. Refer to *LIGHTS, GAUGE AND ACCESSORIES*.

www.midwestmanuals.com

SPECIFIC FAULT CODES

The following gives additional information related to specific fault codes.

Fault Code P0336

500SS/600/800R

This code occurs when engine RPM goes too high which could happen under some mechanical-related circumstances and is not necessarily related to a problem with the engine management system.

Fault Code P1676

600 HO E-TEC Manual Start

This code occurs if the wrong option was selected in B.U.D.S. Connect and start B.U.D.S. to uncheck **With Electric Start**.

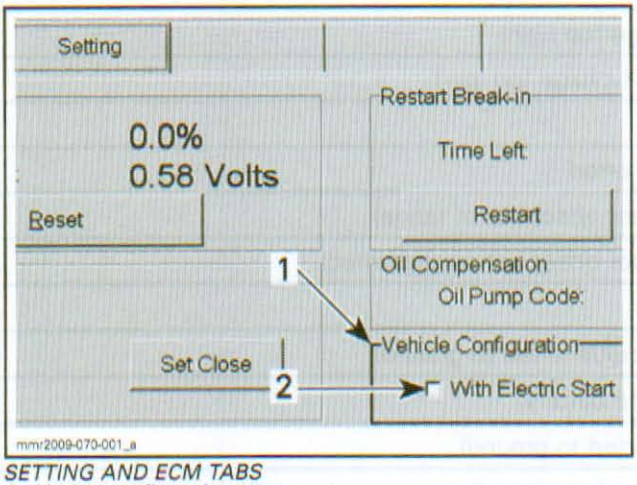

SETTING AND ECM TABS
1. *Vehicle configuration area*
2. *Uncheck* **With Electric Start**

NOTE: If the option is not checked on an Electric Start model, the starter relay (solenoid) and its circuits will not be monitored by the EMS (Engine Management System). The starter operation will not be altered.

Fault Code P1102 (TPS offset out of range)

800R

POSSIBLE CAUSE	ACTION TO PERFORM
Wrong carburetor mechanical position during reset of closed TPS.	– Check cable adjustment. – Check idle stop for wear. – Make sure throttle plate is against throttle stop. – Reset **Closed Throttle**. – Adjust idle throttle angle as specified. – Make sure the TPS body is not loose.
No initialisation of ECM after its replacement.	
TPS sensor has moved from its original position.	

Fault Code P1104 (TPS offset not programmed)

800R

POSSIBLE CAUSE	ACTION TO PERFORM
No initialisation of ECM after its replacement.	Reset **Closed Throttle**.

www.midwestmanuals.com

FAULT CODE TABLES

500SS/600/800R

FAULT CODE	DESCRIPTION
P0079	RAVE solenoid 1 output fault (open circuit/shorted to ground)
P0080	RAVE solenoid 1 output fault (shorted to battery)
P0085	RAVE solenoid 2 output fault (open circuit/shorted to ground)
P0086	RAVE solenoid 2 output fault (shorted to battery)
P0107	Air Pressure Sensor fault (voltage too low)
P0108	Air Pressure Sensor fault (voltage too high)
P0112	Air Temperature Sensor fault (voltage too low)
P0113	Air Temperature Sensor fault (voltage too high)
P0117	Engine Temperature Sensor fault (voltage too low)
P0118	Engine Temperature Sensor fault (voltage too high)
P0122	Throttle Position Sensor fault (voltage too low)
P0123	Throttle Position Sensor fault (voltage too high)
P0326	Knock sensor reference signal fault (voltage too low)
P0336	High engine RPM detected
P0605	System fault (Calibration checksum error)
P1102	System fault (Throttle Position Sensor offset out of range)
P1104	System fault (Throttle Position Sensor offset not programmed)
P1217	Overheat shutdown occurred
P1261	HAC solenoid output fault (open circuit/shorted to ground)
P1262	HAC solenoid output fault (shorted to battery)
P1656	DESS communication link fault (shorted to ground)
P1675	Relay output fault (open circuit/shorted to ground)
P1676	Relay output fault (shorted to battery)
P1520	Critical low oil level detected
P0217	Critical engine temperature detected
P1326	Critical detonation level detected
P0600	CAN Message Missing

www.midwestmanuals.com

600 HO E-TEC

FAULT CODE	DESCRIPTION	CAUSE	ACTION
P0079	RAVE solenoid open circuit or shorted to ground	Disconnected RAVE solenoid. Damaged RAVE solenoid, wires or terminals.	Check for approximately 12 volts between RAVE solenoid RD/OR wire and chassis. Check for approximately 30 ohms between RAVE solenoid terminals. Check system circuit J1B-15.
P0106	Intake air pressure sensor functional problem	Damaged air pressure sensor inside in the ECM.	Replace the ECM.
P0107	Intake air pressure sensor voltage too low	Damaged air pressure sensor inside in the ECM.	Replace the ECM.
P0108	Intake air pressure sensor voltage too high	Damaged air pressure sensor inside in the ECM.	Replace the ECM.
P0111	Air temperature sensor functional problem	Intermittent air temperature sensor reading or circuit wires shorted to ground.	Check system circuits J1A-20 for continuity to terminal "B" of the ATS connector and J1A-27 for continuity to terminal "A" of the ATS connector. Check circuits J1A-20 and J1A-27 for resistivity to ground. Sensor can have an intermittent reading, replace the sensor if necessary.
P0112	Air temperature sensor voltage too low	Air temperature sensor or circuit wires shorted to ground.	Disconnect the sensor and check for a change in the fault code. If the fault code stays the same, look for a short circuit on the harness. If the fault code is different, replace the sensor. Check system circuit J1A-20 for continuity to terminal "B" of the ATS connector. Check system circuit J1A-20 for resistivity to ground.
P0113	Air temperature sensor voltage too high	Disconnected sensor or sensor's resistance too high.	Check for disconnected air temperature sensor on the airbox. Check the air temperature sensor for approximately 2280 to 2736 ohms at 19 to 21°C (66 to 70°F). Replace the sensor if necessary. Check system circuits J1A-20 for continuity to terminal "B" of the ATS connector and J1A-27 for continuity to terminal "A" of the ATS connector.
P0116	Coolant temperature sensor functional problem	Intermittent coolant temperature sensor reading or circuit wires shorted to ground.	Check system circuit J1A-19 for continuity to terminal 1 of the CTS connector and J1A-27 for continuity to terminal 2 of the CTS connector. Check circuit J1A-19 and J1A-27 for resistivity to ground. Replace the sensor if necessary.

www.midwestmanuals.com

FAULT CODE	DESCRIPTION	CAUSE	ACTION
P0117	Coolant temperature sensor voltage too low	Coolant temperature sensor or circuit wires shorted to ground.	Disconnect the sensor and check for a change in the fault code. If the fault code stays the same, look for a short circuit on the harness. If the fault code is different, replace the sensor. Check for leakage between sensor's connection and ground. Check system circuit J1A-19 for continuity to terminal 1 of the CTS connector and J1A-27 for continuity to terminal 2 of the CTS connector. Check circuit J1A-19 and J1A-27 for resistivity to ground.
P0118	Coolant temperature sensor voltage too high	Disconnected sensor or sensor's resistance too high.	Check for disconnected coolant temperature sensor. Check the engine temperature sensor for approximately 2280 to 2736 ohms at 19 to 21°C (66 to 70°F). Replace the sensor if necessary. Check system circuit J1A-19 for continuity to terminal 1 of the CTS connector and J1A-27 for continuity to terminal 2 of the CTS connector.
P0121	Throttle position sensor functional problem	Damaged circuit wires or connector, damaged throttle position sensor.	Check throttle position sensor connector for 5 volts between pin 1 and 2. Check system circuit J1A-18.
P0122	Throttle position sensor voltage too low	Damaged circuit wires, damaged throttle position sensor or damaged ECM pins.	Check system circuits J1A-10 for continuity to terminal 1 of the TPS connector, J1A-26 for continuity to terminal 2 of the TPS connector and J1A-18 for continuity to terminal 3 of the TPS connector. Refer to the service manual for complete throttle position sensor testing procedure.
P0123	Throttle position sensor voltage too high	Damaged circuit wires, damaged throttle position sensor or damaged ECM pins.	Check system circuits J1A-10 for continuity to terminal 1 of the TPS connector, J1A-26 for continuity to terminal 2 of the TPS connector and J1A-18 for continuity to terminal 3 of the TPS connector. Refer to the service manual for complete throttle position sensor testing procedure.
P0217	High coolant temperature detected	Poor cooling conditions. Engine may have been idling for too long. Low coolant level. Problem with cooling system.	Check coolant level. Check condition list to find out how it happened. Check cooling system.
P0230	Fuel pump over current	Damaged circuit wires, damaged fuel pump.	Check system circuit J2-4 for continuity to terminal 1 of the fuel pump connector. Check system circuit J2-4 for resistivity to ground. Replace the fuel pump if necessary.
P0231	Fuel pump open circuit or shorted to ground	Disconnected fuel pump. Damaged fuel pump, damaged circuit wires or connectors.	Check system circuit J2-4 for continuity to terminal 1 of the fuel pump connector. Check system circuit J2-12 for continuity to terminal 2 of the fuel pump connector. Check circuit J2-4 and J2-12 for resistivity to ground.

www.midwestmanuals.com

FAULT CODE	DESCRIPTION	CAUSE	ACTION
P0261	MAG injector open circuit or shorted to ground	Damaged or disconnected injector, circuit wires or ECM output pins.	Check system circuit J1B-8 for continuity to terminal 2 of the MAG injector. Check system circuit J2-13 for continuity to terminal 1 of the MAG injector. Check circuit J1B-8 for resistivity to ground.
P0262	MAG injector shorted to system voltage (over current)	Damaged injector, circuit wires or ECM output pins.	Check for approximately 2.4 ohms on injector. Check if system circuit J1B-8 is shorted to system voltage (55 V).
P0264	PTO injector open circuit or shorted to ground	Damaged or disconnected injector, circuit wires or ECM output pins.	Check system circuit J1B-1 for continuity to terminal 2 of the PTO injector. Check system circuit J2-13 for continuity to terminal 1 of the PTO injector. Check circuit J1B-1 for resistivity to ground.
P0265	PTO injector shorted to system voltage (over current)	Damaged injector, circuit wires or ECM output pins.	Check for approximately 2.4 ohms on injector. Check if system circuit J1B-1 is shorted to system voltage (55 V).
P0326	Knock sensor below minimum noise	Damaged or disconnected knock sensor, damaged circuit wires or damaged connector.	Check system circuits J1A-33 for continuity to terminal 2 of knock sensor connector and J1A-34 for continuity to terminal 1 of knock sensor connector. Check sensor mounting surface and torque.
P0339	Crankshaft signal fault (lost of sync)	CPS signal not plausible, damaged circuit wires, damaged connector or damaged tooth wheel.	Check for 190 to 290 ohms between terminals J1A-6 and J1A-7 of ECM connector. Check for 2 volts AC between terminals J1A-6 and J1A-7 of ECM connector while cranking the engine.
P0351	MAG ignition coil open circuit or shorted to ground	Damaged circuit wires or connector, damaged or disconnected ignition coil.	Check system circuit J1B-26 for continuity to terminal 2 of the ignition coil connector. Check for 55 volts on terminal 3 of ignition coil connector. Check for continuity between terminal 1 of ignition coil connector and chassis.
P0352	PTO ignition coil open circuit or shorted to ground	Damaged circuit wires or connector, damaged or disconnected ignition coil.	Check system circuit J1B-19 for continuity to terminal 2 of the ignition coil connector. Check for 55 volts on terminal 3 of ignition coil connector. Check for continuity between terminal 1 of ignition coil connector and chassis.
P0426	Exhaust temperature sensor functional problem	Intermittent exhaust temperature sensor reading or circuit wires shorted to ground.	Check system circuits J1A-12 for continuity to terminal 2 of the EGTS connector and J1A-27 for continuity to terminal 1 of the EGTS connector. Check circuit J1A-12 for continuity to ground. Replace the sensor if necessary.
P0427	Exhaust temperature sensor voltage too low	Exhaust temperature sensor or circuit wires shorted to ground.	Disconnect the sensor and check for a change in the fault code. If the fault code stays the same, check system circuit J1A-12 for continuity to terminal 2 of the EGTS connector and J1A-27 for continuity to terminal 1 of the EGTS connector. Check circuit J1A-12 for continuity to ground. If the fault code is different, replace the sensor.

www.midwestmanuals.com

FAULT CODE	DESCRIPTION	CAUSE	ACTION
P0428	Exhaust temperature sensor voltage too high	Disconnected sensor or sensor's resistance too high.	Check for disconnected exhaust gas temperature sensor. Check the exhaust temperature sensor for 215 to 225 ohms at 19 to 21°C (66 to 70°F). Replace the sensor if necessary. Check system circuits J1A-12 for continuity to terminal 2 of the EGTS connector and J1A-27 for continuity to terminal 1 of the EGTS connector. Check circuit J1A-27 for continuity to ground.
P0562	Primary 12 volts circuit voltage too low	Battery failure, damaged circuit wires or connection, too much load on electrical system.	Check battery condition, check if additional accessories are connected in the circuit.
P0563	Primary 12 volts circuit voltage too high	An external battery charge may have been used, damaged ECM.	Measure primary 12 volts circuit voltage on diagnostic connector pin 3 and 5 for approximately 14 volts while engine is running. If it's higher than 15.5 volts you may have a damaged ECM. Make sure no external power is connected to the primary 12 volt circuit.
P0601	ECM memory checksum error	Damaged ECM.	Replace ECM.
P0608	Sensor's power supply voltage too low	Damaged circuit wires, shorted TPS or RAVE position sensor.	Disconnect TPS and RAVE position sensor. Check RAVE positions sensor connector for 5 volts between pin 1 and 3. Check system circuit J1A-10 for resistivity to ground.
P1217	Major engine overheat occurred	Poor cooling conditions. Engine may have been idling for too long. Low coolant level. Problem with cooling system.	Check coolant level. Check condition list to find out how it happened. Check cooling system.
P1217	Engine shutdown at idle because overheat occurred	Engine coolant temperature reached a high value at idle and the engine was stopped for protection.	Avoid keeping the engine idling for too long. Inspect cooling system for leaks.
P1231	Oil pump open circuit or shorted to ground	Damaged or disconnected oil pump, circuit wires or ECM output pins.	Check connection on oil pump, check system circuit J1B-23. Check WHITE/RED wire on oil pump connector for 55 volts.
P1326	High engine detonation detected on MAG side	Bad timing offset, engine temperature too high.	Check coolant system, check timing offset.
P1327	High engine detonation detected on PTO side	Bad timing offset, engine temperature too high.	Check coolant system, check timing offset.
P1351	MAG ignition shorted to system voltage	Damaged circuit wires or connector, damaged ignition coil.	Check system circuit J1B-26, check WHITE/RED wire on ignition coil connector for 55 volts.
P1352	PTO ignition shorted to system voltage	Damaged circuit wires or connector, damaged ignition coil.	Check system circuit J1B-19, check WHITE/RED wire on injector connector for 55 volts.

www.midwestmanuals.com

FAULT CODE	DESCRIPTION	CAUSE	ACTION
P1426	High exhaust gas temperature detected	Damaged sensor, low fuel pump pressure, air leak in exhaust system, poor fuel quality.	Check fuel pump pressure, check sensor and replace if necessary, check components in exhaust system.
P1471	RAVE position sensor functional problem	Damaged circuit wires or connector, damaged RAVE position sensor.	Check RAVE position sensor connector for 5 volts between pin 1 and 3. Check system circuit J1A-1.
P1472	RAVE position sensor voltage too low	Damaged circuit wires or connector, damaged RAVE position sensor.	Check RAVE position sensor connector for 5 volts between pin 1 and 3. Check system circuit J1A-1.
P1473	RAVE position sensor voltage too high	Damaged circuit wires or connector, damaged RAVE position sensor.	Check RAVE position sensor connector for 5 volts between pin 1 and 3. Check system circuit J1A-1.
P1476	RAVE valve middle position not reached	Damaged bellows. Damaged or dicconnected hoses. Damaged E-RAVE solenoid valve. Adjustment of the link between the two E-RAVE valves. Carbon deposit around E-RAVE parts.	Check for damaged bellows. Check for damaged or disconnected vacuum hoses. Check for damaged or disconnected pressure hoses. Check if the E-RAVE valves move freely. Clean and make the necessary adjustment if necessary.
P1477	RAVE valve close position not reached	Damaged bellows. Damaged or dicconnected hoses. Damaged E-RAVE solenoid valve. Adjustment of the link between the two E-RAVE valves. Carbon deposit around E-RAVE parts.	Check for damaged bellows. Check for damaged or disconnected vacuum hoses. Check for damaged or disconnected pressure hoses. Check if the E-RAVE valves move freely. Clean and make the necessary adjustment if necessary.
P1478	RAVE valve open position not reached	Damaged bellows. Damaged or dicconnected hoses. Damaged E-RAVE solenoid valve. Adjustment of the link between the two E-RAVE valves. Carbon deposit around E-RAVE parts.	Check for damaged bellows. Check for damaged or disconnected vacuum hoses. Check for damaged or disconnected pressure hoses. Check if the E-RAVE valves move freely. Clean and make the necessary adjustment if necessary.
P1520	Critical low oil level detected	Engine has run with oil level lamp lit for too long.	Fill the oil tank with proper oil type.
P1532	High ECM temperature detected	Poor fuel flow in ECM. Damaged ECM.	Check fuel system for clogged filter, damaged regulator or damaged fuel pump.
P1533	Major ECM overheat occurred	Low fuel pressure, low fuel circulation in ECM.	Check fuel pump pressure, check fuel line for pinched hose.

www.midwestmanuals.com

FAULT CODE	DESCRIPTION	CAUSE	ACTION
P1549	Major exhaust gas overheat occurred	Damaged sensor, low fuel pump pressure, air leak in exhaust system, poor fuel quality.	Check fuel pump pressure, check sensor and replace if necessary, check components in exhaust system.
P1562	Low voltage on 55 V system voltage circuit	Damaged circuit wires, connector, injector, ignition coil, oil pump, capacitor or ECM.	Check for inverted wires on magneto connector, loose connection on capacitor. Check for defective component as describe in possible causes.
P1563	High voltage on 55 V system voltage circuit	Damaged circuit wires, connector or ECM.	Check for inverted wires on magneto connector, loose connection on capacitor.
P1621	Overload on 12 V primary circuit	Damaged circuit wires or connector.	Check RED/ORANGE circuit for damaged or shorted wires. Check tail light, headlamp or diagnostic connector.
P1622	Overload on 12 V secondary circuit	Damaged circuit wires or connector.	Check RED/YELLOW circuit for damaged or shorted wire. Check connections on visor outlet, check heated grips if equipped with standard gauge.
P1623	Overload on 12 V battery circuit	Damaged circuit wires, connector or battery.	Check RED/WHITE circuit for damaged or shorted wire. Check battery condition. A blown 30 A fuse is a good indication of a problem with the wires or the battery.
P1660	Tachometer RPM signal open circuit or shorted to ground		
P1656	DESS line shorted to ground	Damaged circuit wires or mixed up connections.	Check system circuits J1A-23 for continuity to terminal 1 of DESS post connector, J1A-11 for continuity to terminal 3 of DESS post connector and J1A-5 for continuity to terminal 2 of DESS post connector. Check system circuit J1A-23 for continuity to circuit J1A-5 when DESS key is installed on DESS post. Check system circuit J1A-11 for continuity to the center contact of the DESS post connector and circuit J1A-5 for continuity to the outer ring of the DESS post. Check system circuits J1A-5, J1A-11 and J1A-23 for continuity to ground.
P1676	Battery relay open circuit or shorted to ground (electric start only)	Damaged or disconnected relay, circuit wires or terminals.	Check for disconnected relay, damaged circuit wires.

www.midwestmanuals.com

FUEL TANK AND FUEL PUMP

SERVICE TOOLS

Description	Part Number	Page
FLUKE 115 MULTIMETER	529 035 868	245
FUEL HOSE ADAPTER	529 036 023	233
FUEL PUMP NUT TOOL	529 036 118	241–242
HOSE PINCHER	295 000 076	235
LEAK TEST KIT	529 033 100	231
PLIERS OETIKER 1099	295 000 070	247
PRESSURE GAUGE	529 035 709	233
SMALL HOSE PINCHER	295 000 076	231, 237, 240
SUCTION PUMP	529 035 880	234
VACUUM/PRESSURE PUMP	529 021 800	231–232

SERVICE PRODUCTS

Description	Part Number	Page
DIELECTRIC GREASE	293 550 004	247

Midwest Manuals
sales@midwestmanuals.com
www.midwestmanuals.com

www.midwestmanuals.com

500SS/600/800R

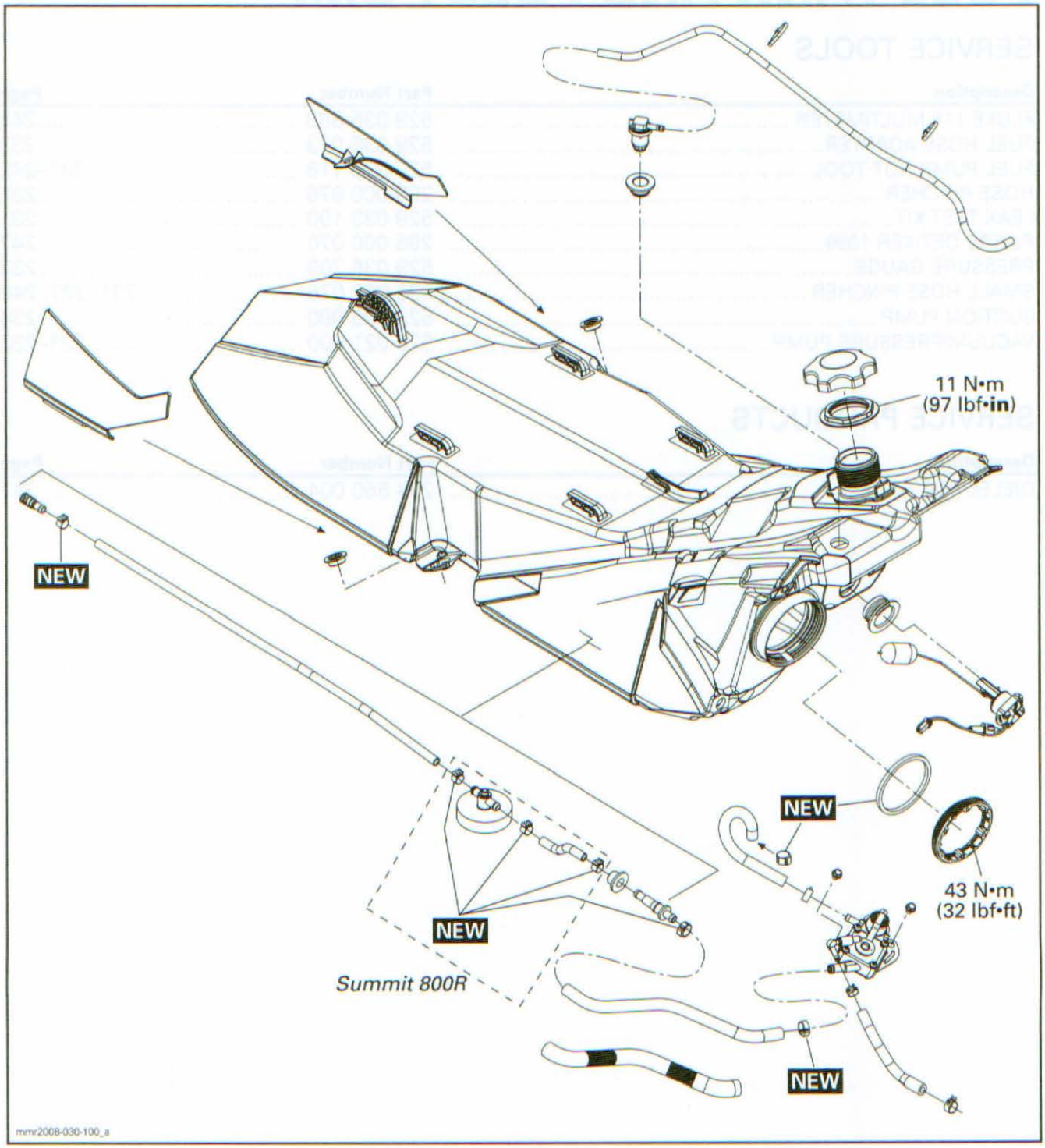

www.midwestmanuals.com

600 HO E-TEC

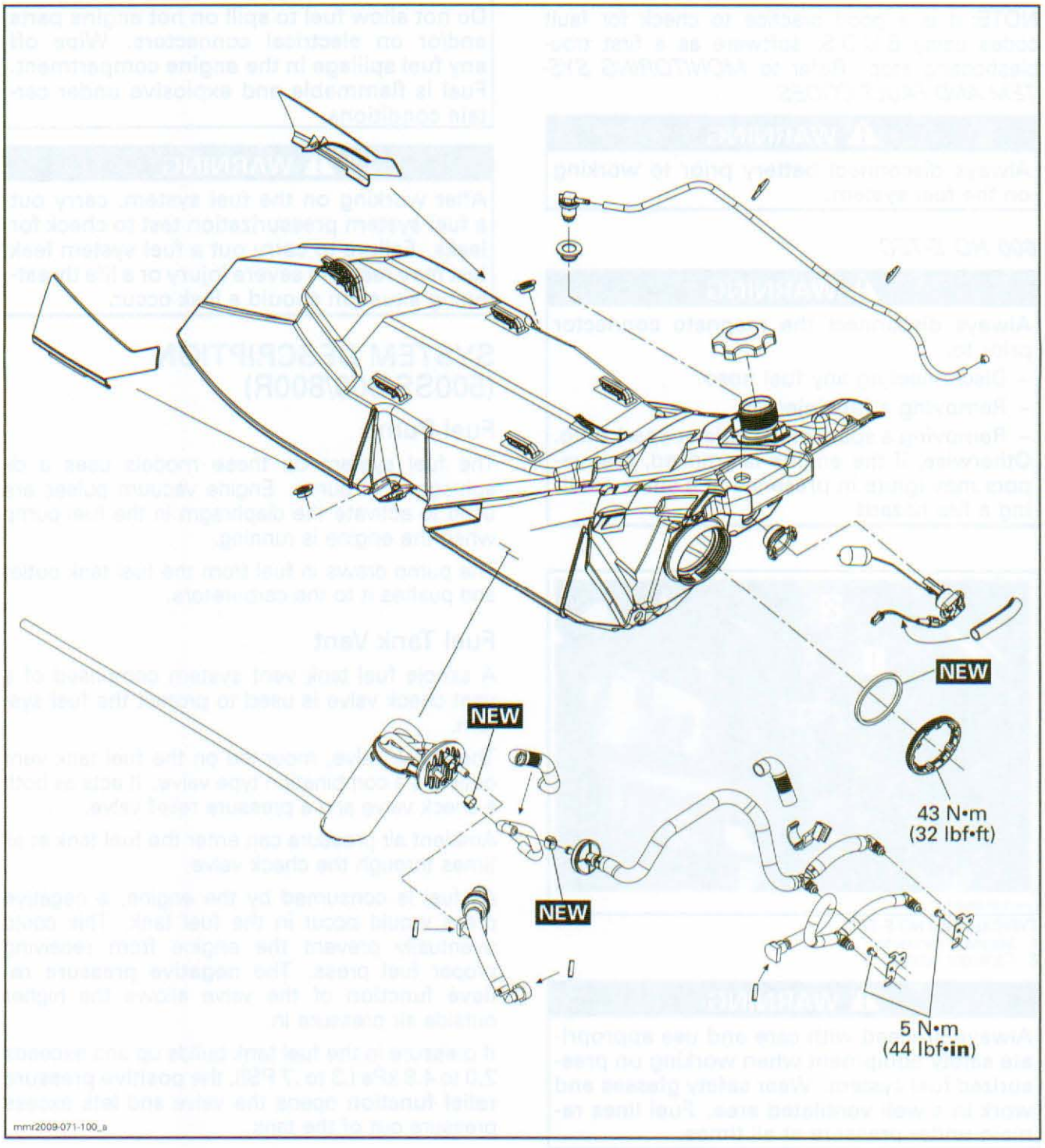

www.midwestmanuals.com

GENERAL

NOTE: It is a good practice to check for fault codes using B.U.D.S. software as a first troubleshooting step. Refer to *MONITORING SYSTEM AND FAULT CODES*.

⚠ WARNING

Always disconnect battery prior to working on the fuel system.

600 HO E-TEC

⚠ WARNING

Always disconnect the magneto connector prior to:
- Disconnecting any fuel hose.
- Removing a fuel injector.
- Removing a spark plug cable or spark plug.

Otherwise, if the engine is cranked, fuel vapors may ignite in presence of a spark creating a fire hazard.

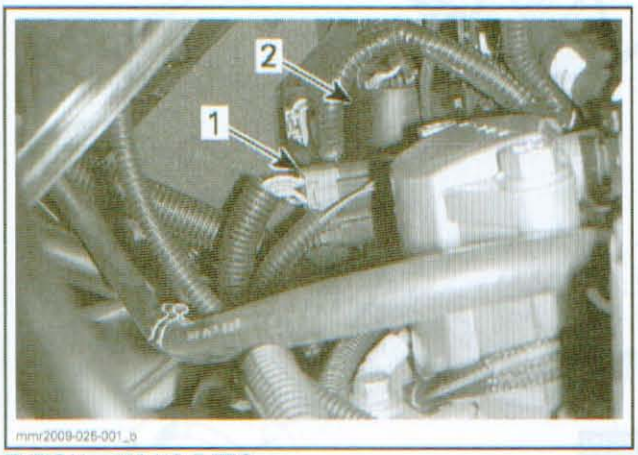

TYPICAL - 600 HO E-TEC
1. *Magneto connector*
2. *Capacitor support*

⚠ WARNING

Always proceed with care and use appropriate safety equipment when working on pressurized fuel system. Wear safety glasses and work in a well ventilated area. Fuel lines remain under pressure at all times.

Use the B.U.D.S. software to release fuel pressure prior to removing a hose.

Cover the fuel line connection with an absorbent shop rag and slowly disconnect the fuel hose to minimize spilling.

⚠ WARNING

Do not allow fuel to spill on hot engine parts and/or on electrical connectors. Wipe off any fuel spillage in the engine compartment. Fuel is flammable and explosive under certain conditions.

⚠ WARNING

After working on the fuel system, carry out a fuel system pressurization test to check for leaks. Failure to carry out a fuel system leak test may result in severe injury or a life threatening situation should a leak occur.

SYSTEM DESCRIPTION (500SS/600/800R)

Fuel Pump

The fuel system on these models uses a diaphragm fuel pump. Engine vacuum pulses are used to activate the diaphragm in the fuel pump when the engine is running.

The pump draws in fuel from the fuel tank outlet and pushes it to the carburetors.

Fuel Tank Vent

A simple fuel tank vent system comprised of a vent check valve is used to protect the fuel system.

The check valve, mounted on the fuel tank vent outlet, is a combination type valve. It acts as both a check valve and a pressure relief valve.

Ambient air pressure can enter the fuel tank at all times through the check valve.

As fuel is consumed by the engine, a negative press would occur in the fuel tank. This could eventually prevent the engine from receiving proper fuel press. The **negative pressure relieve function** of the valve allows the higher outside air pressure in.

If pressure in the fuel tank builds up and exceeds 2.0 to 4.8 kPa (.3 to .7 PSI), the **positive pressure relief function** opens the valve and lets excess pressure out of the tank.

Fuel Filter

The system has one level of filtering, a fuel strainer at the fuel pick-up(s) within the fuel tank.

Fuel Level Gauge

An electric float type fuel level sensor is used with the gauge for fuel level indication.

www.midwestmanuals.com

SYSTEM DESCRIPTION (600 HO E-TEC)

Electric Fuel Pump

The electric fuel pump is mounted in the front RH upper part of fuel tank.

A 12 Vdc high pressure fuel pump with a jet pump is used.

NOTE: Although the fuel pump is connected to the 55 Vdc system, the ECM modulates the voltage (Pulse Width Modulation) between 9 and 16 Vdc depending on the engine RPM. The fuel pump output will change as voltage changes.

As soon as the engine is cranked, the electric fuel pump turns on and runs continuously to provide fuel to the injectors.

To ensure a constant delivery of fuel to the engine for uphill, downhill or sideways riding conditions when the fuel quantity is low, a rear pickup and a sump tank at the bottom of the fuel pump module is used. A combination check valve allows the pump to draw fuel either from the front inlet or from the rear pickup.

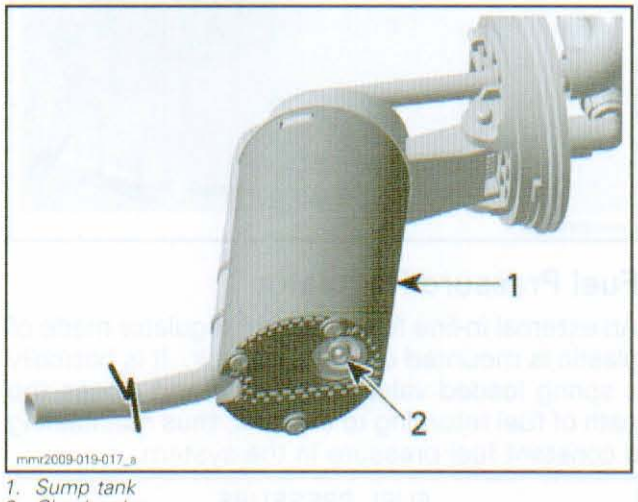

1. Sump tank
2. Check valve

The sump tank encompasses the fuel pump.

When there is enough fuel in the fuel tank, the bottom inlet of the fuel pump draws fuel from the sump tank.

When the fuel pump runs in this condition, fuel from the electric pump flows through a jet pump that contains a restrictor.

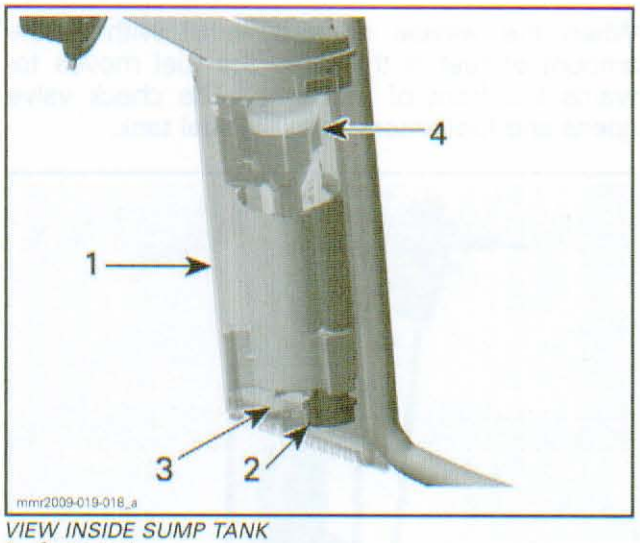

VIEW INSIDE SUMP TANK
1. Sump tank
2. Bottom inlet
3. Check valve (open upwards)
4. Restrictor

As the fuel accelerates through the restrictor, it generates a low pressure area at a connection to the rear pickup, which draws in fuel to fill the sump tank.

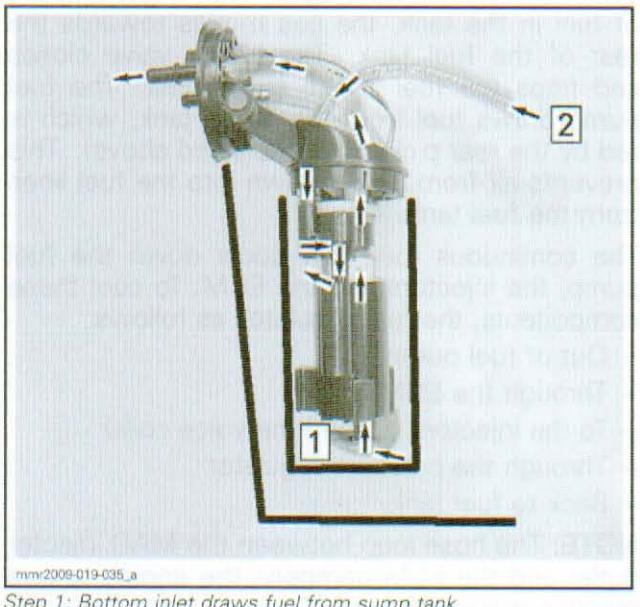

Step 1: Bottom inlet draws fuel from sump tank
Step 2: Low pressure from restrictor draws fuel from rear pickup to fill sump tank

At the bottom of the sump tank, a check valve allows the fuel in the fuel tank to enter the sump tank.

As the fuel is drawn out of the sump tank by the electric pump, fuel in the vehicle tank naturally enters the sump tank through the sump tank check valve.

www.midwestmanuals.com

When the vehicle rides downhill with a low amount of fuel in the tank, the fuel moves towards the front of fuel tank. The check valve opens and fuel enters from the fuel tank.

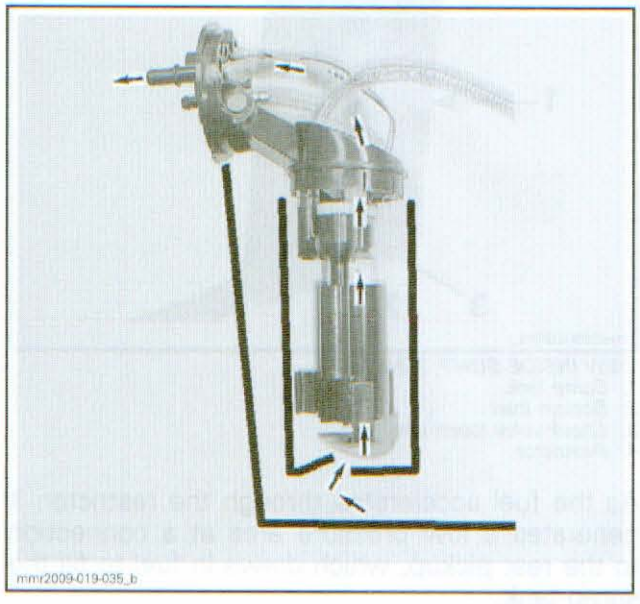

When the vehicle rides uphill with a low amount of fuel in the tank, the gas moves towards the rear of the fuel tank. The check valve closes and traps the fuel in the sump tank. The fuel pump draws fuel from the sump tank, which is fed by the rear pickup (as explained above). This prevents air from being drawn into the fuel lines from the fuel tank.

The continuous fuel flow cools down the fuel pump, the injectors and the ECM. To cool these components, the fuel circulates as follows:

- Out of fuel pump
- Through the ECM
- To the injectors (around the voice coils)
- Through the pressure regulator
- Back to fuel tank.

NOTE: The hose loop between the MAG injector outlet and the ECM dampens the engine torque reaction movement.

Fuel Pickup

Fuel enters into the sump tank from either an inlet at the bottom of the sump tank, or from a remote pickup in the rear portion of the fuel tank.

The bottom fuel pump inlet uses a nylon mesh filter, and the rear pickup uses a replaceable strainer to filter out relatively large dirt particles.

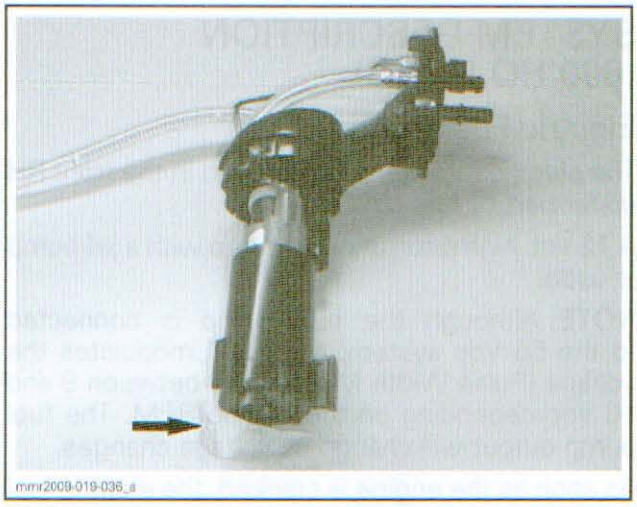

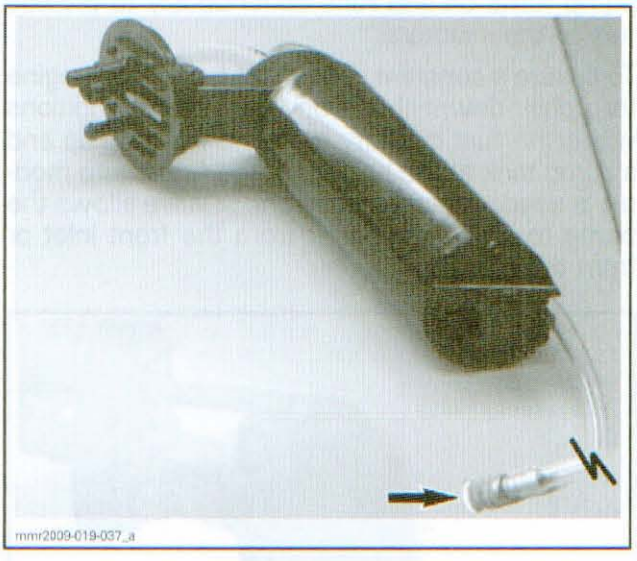

Fuel Pressure Regulator

An external in-line fuel pressure regulator made of plastic is mounted over the oil tank. It is basically a spring loaded valve that opens and closes the path of fuel returning to the tank, thus maintaining a constant fuel pressure in the system.

FUEL PRESSURE
Approximately 303 kPa (44 PSI) at 2000 RPM (will be lower at idle)

Fuel Tank Vent

The fuel tank is vented through a combination type check valve that allows ambient air pressure to enter fuel tank at all times.

As fuel is consumed by the engine, a negative press would occur in the fuel tank. This could eventually prevent the engine from receiving proper fuel press. The **negative pressure relieve function** of the valve allows the higher outside air pressure in.

www.midwestmanuals.com

If pressure builds up and exceeds 2.0 to 4.8 kPa (.3 to .7 PSI) in the fuel tank, the check valve opens and lets the excess pressure vent out of the tank.

In-Line Fuel Filter

An in-line filter is located in front of fuel tank, above the oil tank.

It is a replaceable metallic canister type filter used to deliver dirt-free fuel to the injectors.

The fuel filter is sold as a kit that comprises an assembly of hoses, the filter, and the quick connect fittings.

Fuel Level Indication

A float type fuel level sensor varies its resistance with fuel level thus providing a signal to the multifunction gauge for fuel level indication.

INSPECTION

FUEL SYSTEM PRESSURIZATION

1. Fill up fuel tank.
2. Open the left side panel to access the fuel vent line.
3. Install a SMALL HOSE PINCHER (P/N 295 000 076) on the vent line.

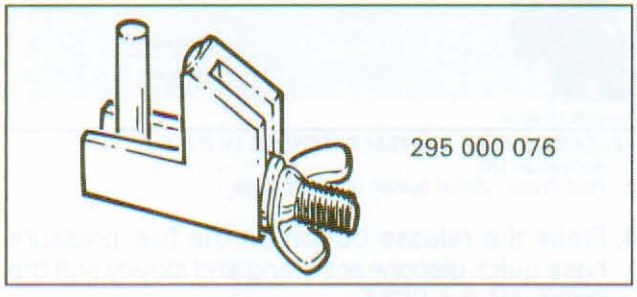

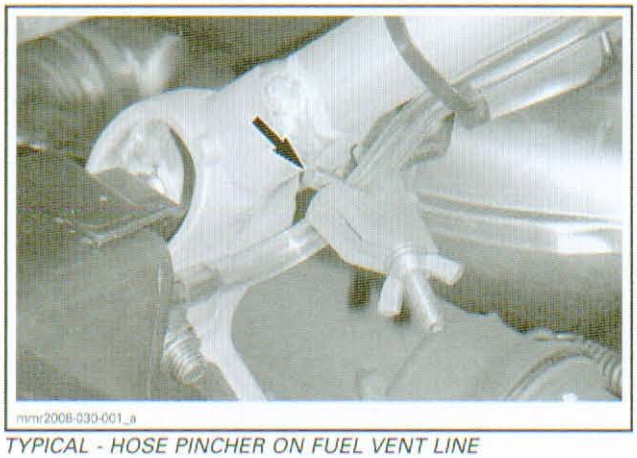

TYPICAL - HOSE PINCHER ON FUEL VENT LINE

500SS/600/800R

On these models, also install a hose pincher on the carburetor fuel feed line.

All Models

4. Install the appropriate test cap from the LEAK TEST KIT (P/N 529 033 100) on fuel tank inlet.

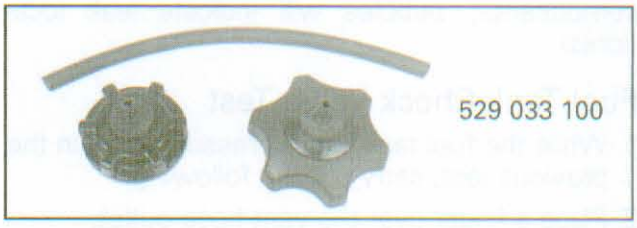

5. Install VACUUM/PRESSURE PUMP (P/N 529 021 800) on pressure test fuel cap.



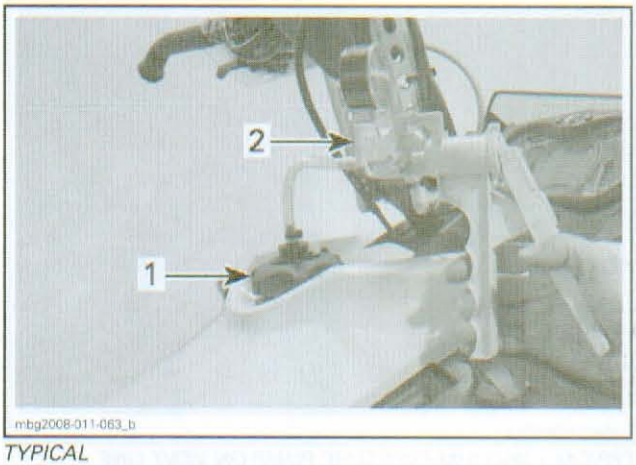

TYPICAL
1. *Pressure test fuel cap*
2. *Vacuum/pressure pump*

6. Set pump selector to pressure.
7. Pressurize fuel tank as follows.

www.midwestmanuals.com

PRESSURE	TIME WITHOUT PRESSURE DROP
21 kPa (3 PSI)	3 minutes

If pressure drops, locate fuel leak(s) and repair or replace leaking component(s).

To ease locating leak(s), spray soapy water on components; bubbles will indicate leak location(s).

Fuel Tank Check Valve Test

1. While the fuel tank is still pressurized as in the previous test, carry out the following:
2. Place a finger over the vent hose outlet.
3. When removing hose pincher, alternately touch and release vent hose outlet. You should feel pressurized air flowing out indicating the pressure relief valve function is working.
4. Release any remaining pressure in the fuel tank by slowly unscrewing fuel tank cap.
5. Remove the pressure test fuel cap.
6. Remove the fuel tank vent line from its fitting on the lower left front body panel.
7. Install the VACUUM/PRESSURE PUMP (P/N 529 021 800) on the vent line and apply air pressure through check valve. Air must flow freely towards the fuel tank neck.

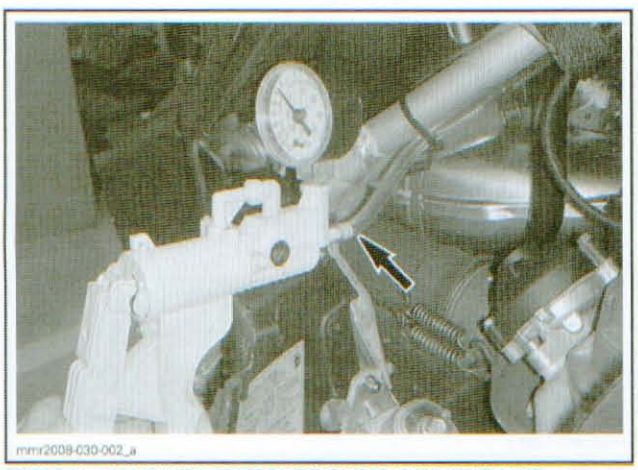

TYPICAL - VACUUM/PRESSURE PUMP ON VENT LINE

NOTE: If fuel vent check valve does not function as indicated in test, replace check valve.

8. Remove vacuum/pressure pump.
9. Install vent line on its fitting.
10. Install normal fuel tank cap.

FUEL PUMP PRESSURE TEST (600 HO E-TEC)

The pressure test will show the available pressure at the fuel pump outlet. It validates the pressure regulator and the fuel pump.

1. Ensure there is enough gas in fuel tank.
2. Connect vehicle to the latest B.U.D.S. software, refer to the *COMMUNICATION TOOLS AND B.U.D.S. SOFTWARE* section.
3. Release the fuel pressure in the system by selecting the following in B.U.D.S.:
   - 3.1 **Read Data**
   - 3.2 **Activation** tab
   - 3.3 **ECM** tab in the lower LH corner of the **Activation** page
   - 3.4 **Fuel Press. Relief** button in the **Activate** field.

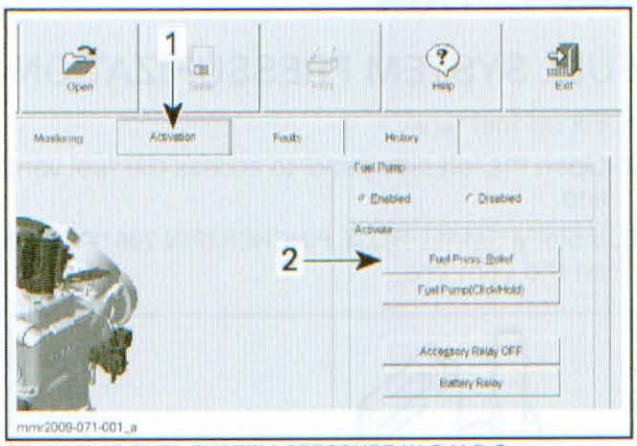

RELEASING FUEL SYSTEM PRESSURE IN B.U.D.S.
1. *Activation tab*
2. *Fuel Press. Relief button on ECM page*

4. Press the release button on the fuel pressure hose quick disconnect fitting and slowly pull the fitting off the ECM.

www.midwestmanuals.com

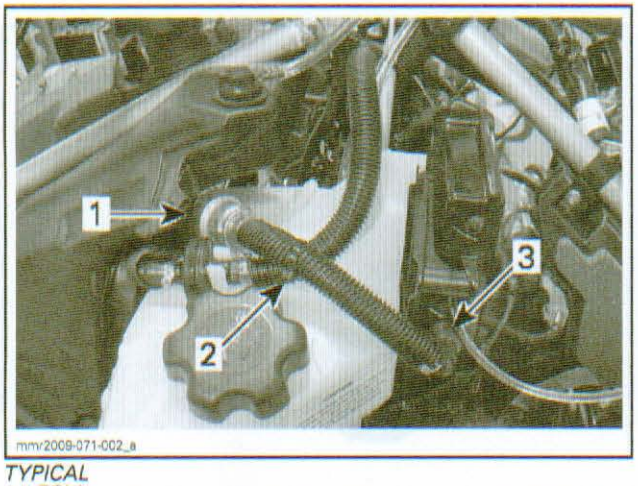

TYPICAL
1. *ECM*
2. *Fuel pressure hose*
3. *Release button, quick disconnect fitting*

NOTE: Place a container under the hose fitting to recover the fuel remaining in the system.

5. Install the FUEL HOSE ADAPTER (P/N 529 036 023) and the PRESSURE GAUGE (P/N 529 035 709) between fuel pressure hose and ECM.

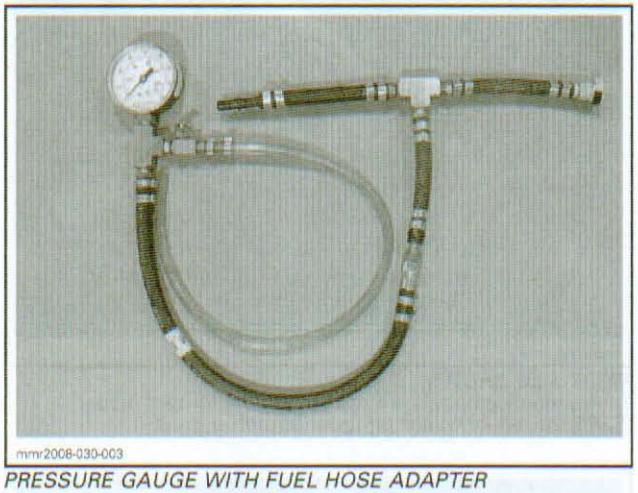

PRESSURE GAUGE WITH FUEL HOSE ADAPTER

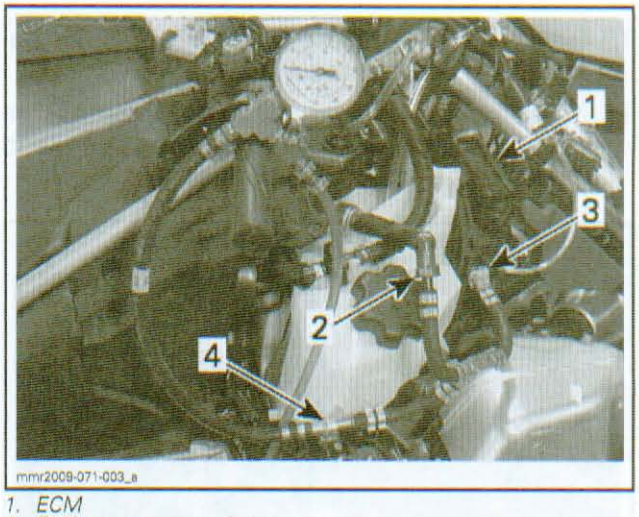

1. *ECM*
2. *Fuel pressure hose fitting*
3. *Fuel hose adapter to ECM fitting*
4. *Fuel hose adapter to pressure gauge*

⚠ WARNING

When carrying out pressure test, ensure fuel is not leaking from test equipment onto hot exhaust system or electrical components. Ensure fuel hose do not come into contact with hot engine parts or hot exhaust system.

6. Start engine.
7. Run engine above 2000 RPM and observe the fuel pressure.

FUEL PRESSURE
303 kPa (44 PSI)

FUEL PRESSURE TROUBLESHOOTING	
RESULT	POSSIBLE CAUSE
Pressure above specifications	Defective fuel regulator
Pressure below specifications	Clogged fuel filter
	Defective fuel regulator
	Defective fuel pump
	Leak in the fuel system circuit

8. Stop engine.

Fuel pressure should remain stable.

9. If fuel pressure drops, check the following for leaks:
   - Tools
   - Hoses
   - Fuel injectors
   - Fuel pressure regulator
   - Fuel pump.

www.midwestmanuals.com

10. Release fuel pressure using B.U.D.S. as described in this procedure.
11. Bleed away any remaining fuel in the pressure gauge and fuel hose adapter using the bleed valve on the fuel hose adapter.



1. Pressure gauge bleed valve

12. Remove pressure gauge and fuel hose adapter.
13. Reinstall the fuel pressure hose on ECM and gently but firmly pull on hose to ensure quick disconnect fitting is properly locked and secure on the ECM.
14. Reinstall all remaining removed parts.

PROCEDURES

FUEL TANK

Fuel Tank Removal

1. Remove the following items, refer to *BODY* section:
   - Seat
   - Both side panels
   - Hood
   - Console.
2. Drain fuel tank as much as possible using the SUCTION PUMP (P/N 529 035 880).



3. Remove the aft mounting bolt from the rear frame member forward mount, and the top mounting bolts from upper column support as indicated on the illustration. Discard the elastic nuts.

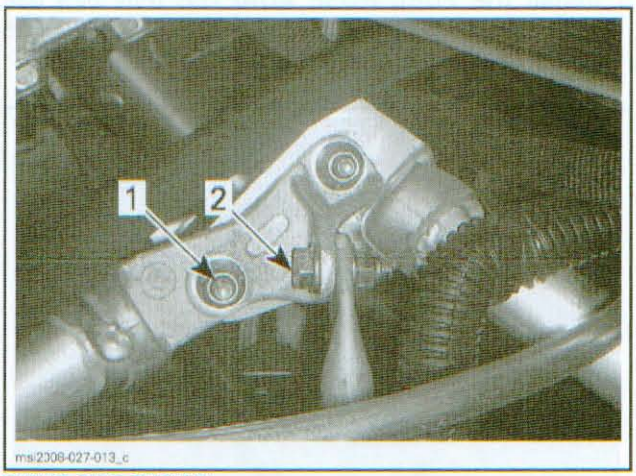

RIGHT SIDE SHOWN
1. At mounting bolt on rear frame member forward mount
2. RH top mounting bolt on upper column support

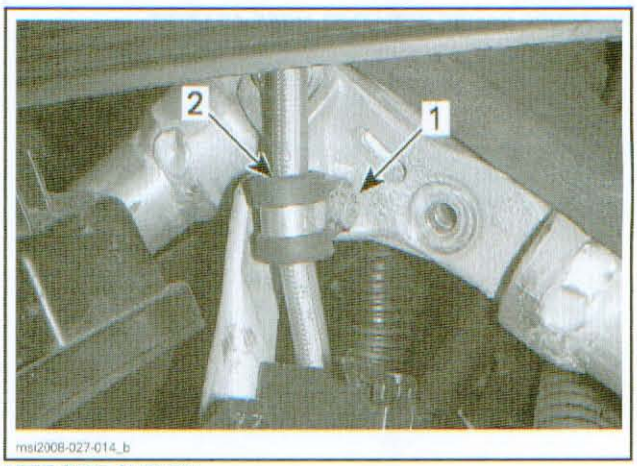

LEFT SIDE SHOWN
1. Top mounting bolt on LH upper column support
2. Brake hose retaining clamp

www.midwestmanuals.com

4. Release the torque applied to the mounting bolt on the front frame member, but do not remove bolt and elastic nut.



1. Mounting bolt, front frame member

5. Remove trim panels covering the aft end of the rear frame members by pulling upwards, then pulling out (one each side).

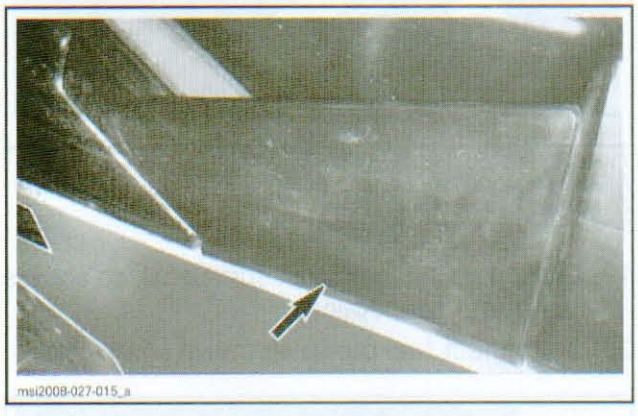

6. Remove elastic nut and shoulder bushing retaining the rear frame members (one each side) to the tunnel (discard nuts, keep shoulder bushings).

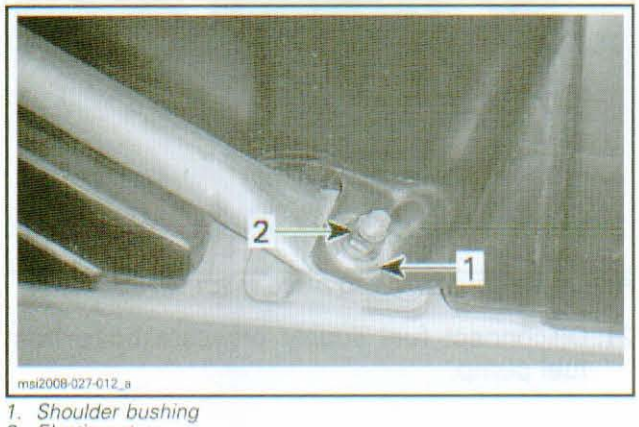

1. Shoulder bushing
2. Elastic nut

7. Disconnect the fuel level sensor connector.

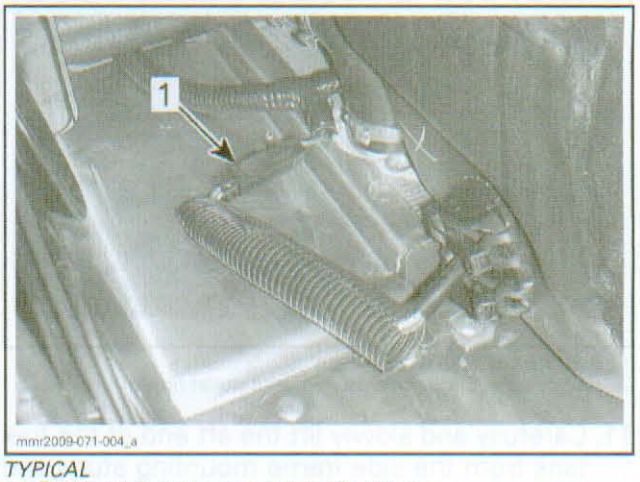

TYPICAL
1. Fuel level sensor connector to disconnect

8. Disconnect the fuel tank vent line at the check valve.

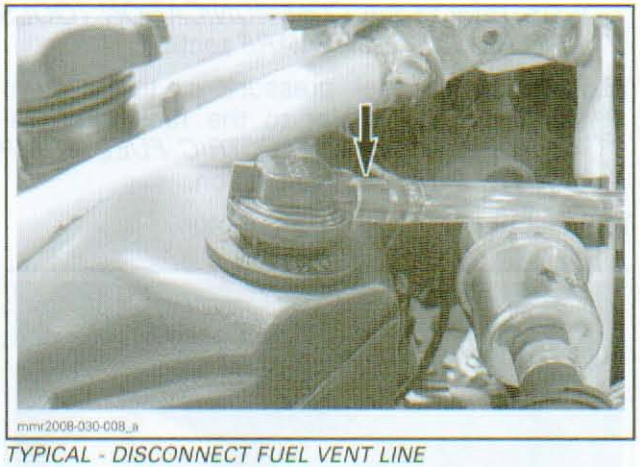

TYPICAL - DISCONNECT FUEL VENT LINE

500SS/600/800R Models

9. Install a small HOSE PINCHER (P/N 295 000 076) on the fuel tank outlet hose.
10. Disconnect the fuel line by cutting the Oetiker clamp and pulling the hose off the fitting.

⚠ WARNING

Work in a well ventilated area. Use a shop rag to absorb the residual fuel that will drain from the hose as it is disconnected.

www.midwestmanuals.com

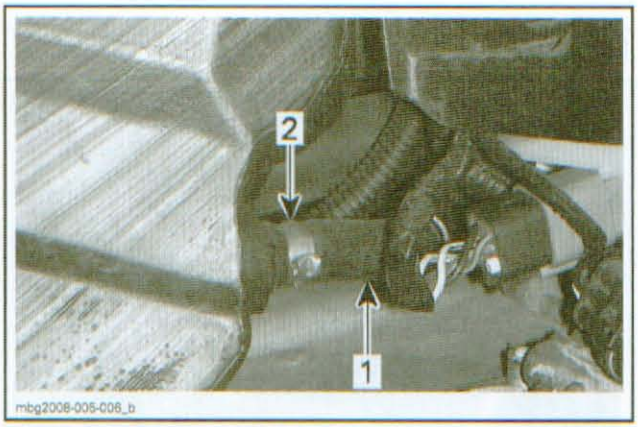

1. Install small hose pincher here
2. Remove this Oetiker clamp, fuel tank outlet hose

11. Carefully and slowly lift the aft end of the fuel tank from the side frame mounting studs and remove it from the vehicle.

600 HO E-TEC

12. Connect vehicle to the latest B.U.D.S. software, refer to the *COMMUNICATION TOOLS AND B.U.D.S. SOFTWARE* section.
13. Release the fuel pressure in the system using B.U.D.S., refer to the fuel pump removal procedure in *ELECTRIC FUEL PUMP (600 HO E-TEC)* in this section.
14. Disconnect magneto connector.

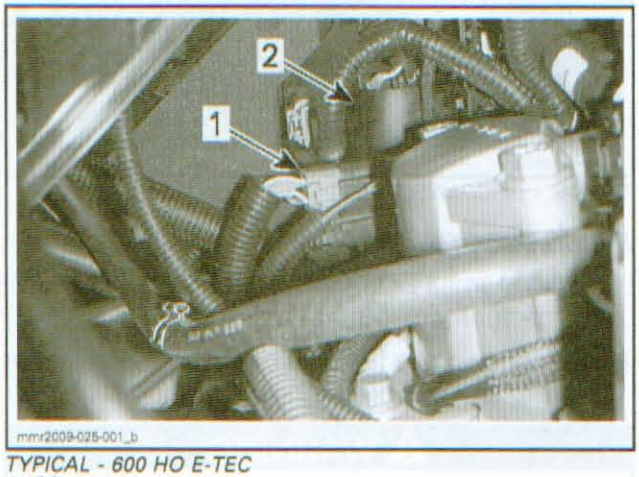

TYPICAL - 600 HO E-TEC
1. Magneto connector
2. Capacitor support

⚠ WARNING

The magneto connector must be disconnected to prevent any spark in the engine compartment and to remove power from the fuel pump. Otherwise, if engine is cranked, fuel vapors may ignite in presence of a spark creating a fire hazard.

15. Cut the locking ties securing the fuel return hose to the fuel supply hose and to the upper column.
16. Press the release button on the fuel pressure hose quick disconnect fitting and slowly pull the fitting off the ECM.

NOTE: Place a container under the fitting to recover the fuel remaining in the system.

17. Cut the locking tie securing the pressure and return hoses together.
18. Remove the fuel pressure regulator from its holder on top of oil tank.

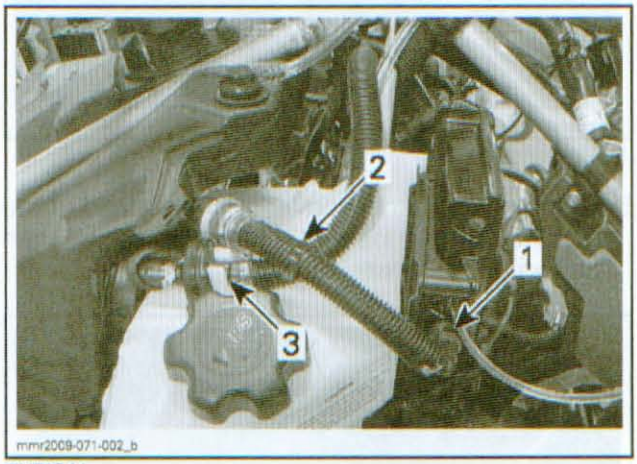

TYPICAL
1. Fuel pressure hose fitting at ECM
2. Locking tie to remove
3. Fuel pressure regulator holder

19. Move the fuel tank back sufficiently to access fuel pump connections.
20. Disconnect fuel pump electrical connector.

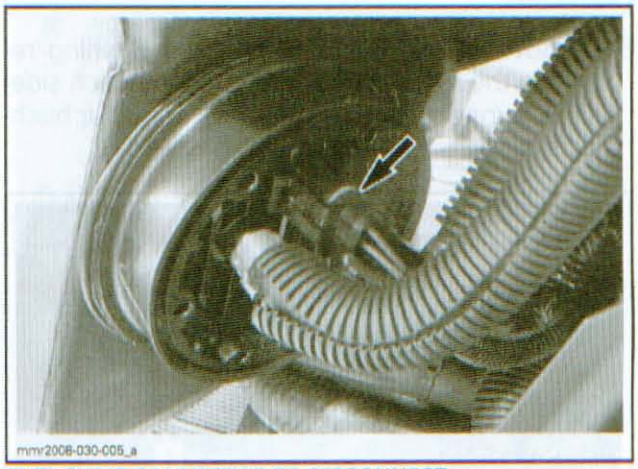

FUEL PUMP CONNECTOR TO DISCONNECT

21. Disconnect fuel supply pressure hose from fuel pump.

www.midwestmanuals.com

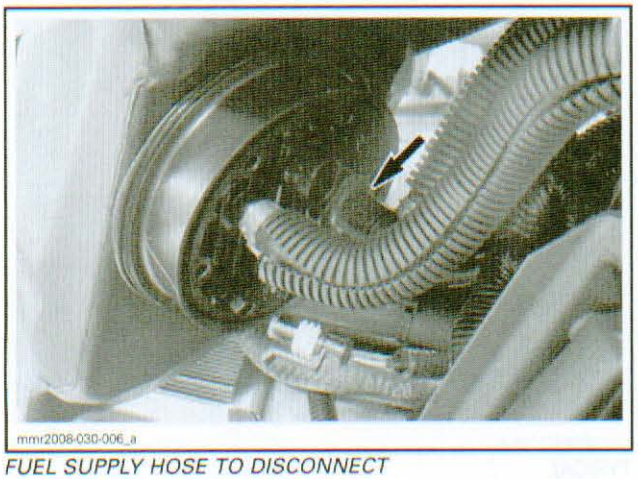

FUEL SUPPLY HOSE TO DISCONNECT

22. Install a SMALL HOSE PINCHER (P/N 295 000 076) on the fuel return hose close to the pump inlet.
23. Remove and discard the Oetiker clamp securing the fuel return hose to the fuel pump, then remove the fuel return hose from the pump.



TYPICAL - REMOVE AND DISCARD OETIKER CLAMP

NOTE: Place a container under the return hose end to recover the fuel remaining in the system.

24. Carefully and slowly lift the aft end of the fuel tank from the side frame mounting studs and remove it from vehicle.

Fuel Tank Installation

Installation procedures are the reverse of the removal procedures however, pay attention to the following.

500SS/600/800R

1. Position fuel tank on vehicle.
2. Connect fuel supply hose to fuel tank fitting using a **NEW** Oetiker clamp, then remove hose pincher.

⚠ WARNING

Ensure hose clamp is tight and that hose cannot turn on the fitting.

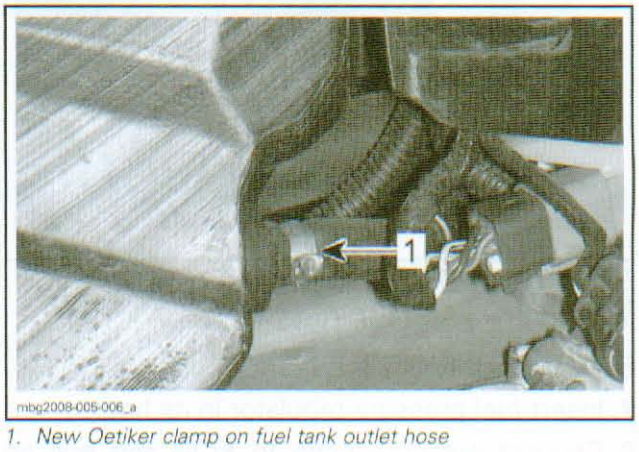

1. New Oetiker clamp on fuel tank outlet hose

3. To continue installation, go to **step 10** in 600 HO E-TEC.

600 HO E-TEC

1. Position fuel tank on vehicle.
2. Install the fuel return hose on the fuel pump using a **NEW** Oetiker clamp before installing pressure hose and electrical connector.

⚠ WARNING

Ensure hose clamp is tight and that hose cannot turn on the fitting.

3. Remove hose pincher from fuel return hose.
4. Connect the fuel supply hose to the fuel pump, then pull on hose to ensure the fitting is properly locked and secure.
5. Connect the fuel tank pump electrical connector.

www.midwestmanuals.com

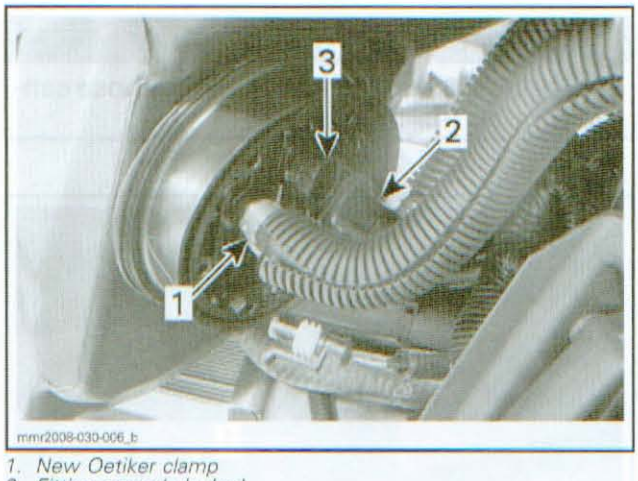

1. *New Oetiker clamp*
2. *Fitting properly locked*
3. *Electrical connector installed*

6. Move tank forward in normal position.
7. Insert fuel pressure regulator in its holder.
8. Connect pressure hose to ECM and pull on hose to ensure it is properly locked and secure.
9. Install the locking tie securing pressure hose and return hose together.

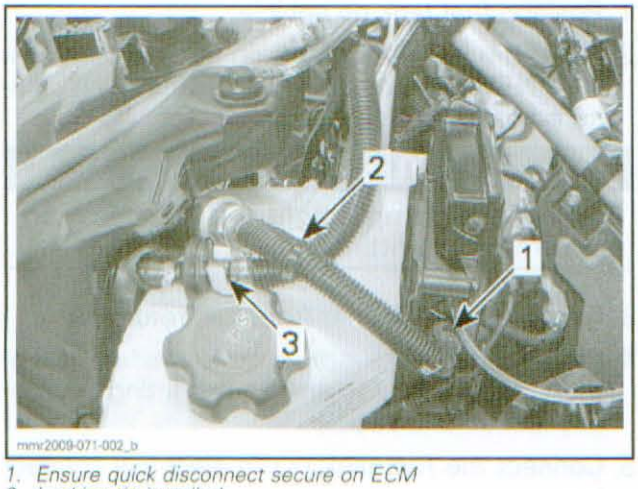

1. *Ensure quick disconnect secure on ECM*
2. *Locking tie installed*
3. *Pressure regulator in holder*

10. Connect the fuel level sensor connector.

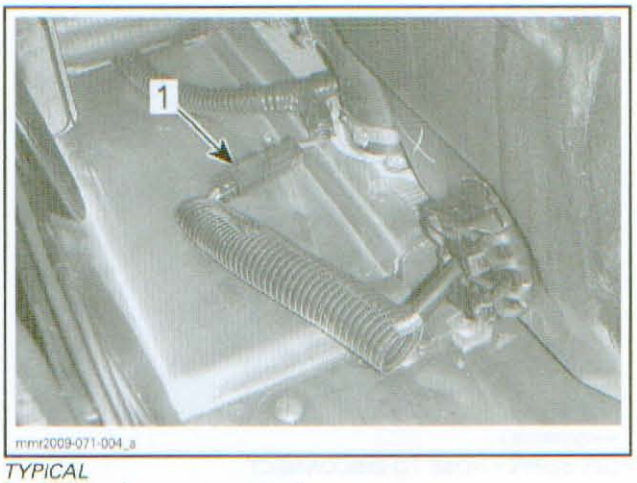

TYPICAL
1. *Fuel level sensor connected*

11. Install the vent tube on check valve.

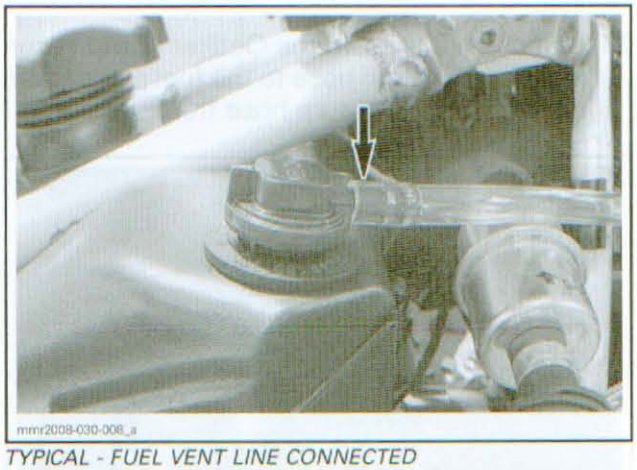

TYPICAL - FUEL VENT LINE CONNECTED

⚠ WARNING

Ensure vent tube is not kinked or pinched.

12. Install shoulder bushings and NEW elastic nuts on the rear frame members (one each side).
13. Torque nuts securing aft end of rear frame members to 33 N•m (24 lbf•ft).

www.midwestmanuals.com

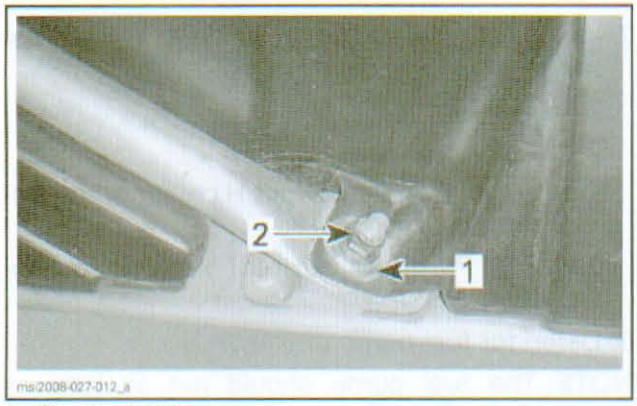

1. Shoulder bushing
2. Elastic nut

14. Insert the mounting bolts on the rear frame members forward mounts, and the two upper mounting bolts on the upper column supports. Secure with NEW elastic nuts.

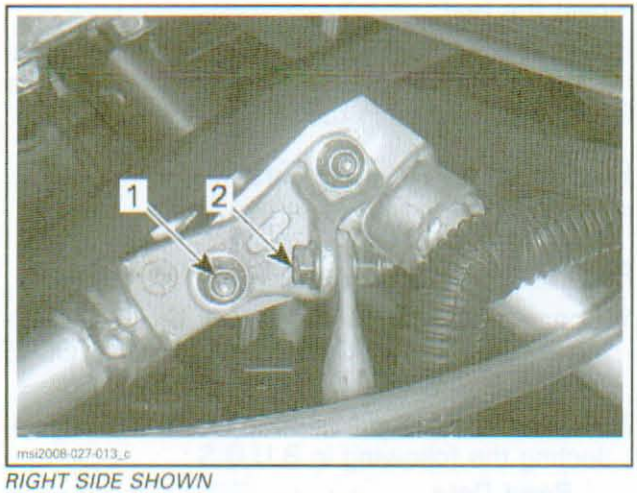

RIGHT SIDE SHOWN
1. Rear frame member mounting bolt
2. Mounting bolts on upper column supports (one each side)

NOTE: Be sure to install the brake hose clamp on the LH upper column support mounting bolt.

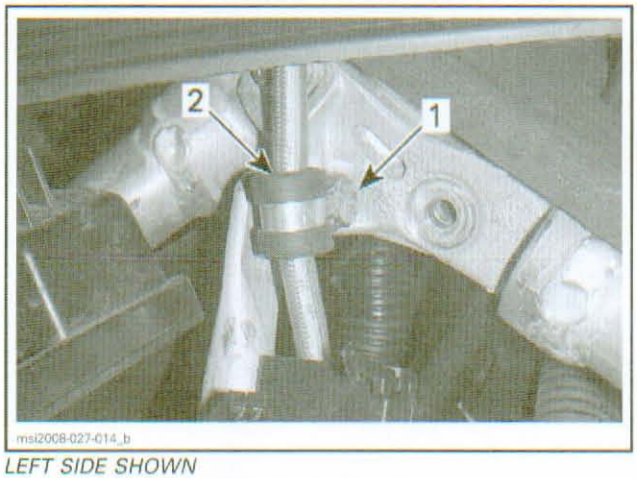

LEFT SIDE SHOWN
1. LH upper column support mounting bolt
2. Brake hose retaining clamp

15. Torque nut on rear frame members mounting bolt and top nuts on upper column supports to 18 N•m (159 lbf•**in**).
16. Torque elastic nut on the front frame member mounting bolt to 18 N•m (159 lbf•**in**).

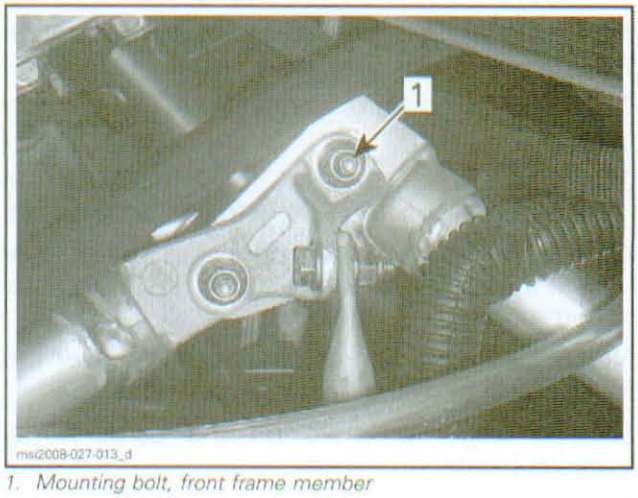

1. Mounting bolt, front frame member

17. Install all remaining parts.
18. Torque the fuel tank filler neck nut to 11 N•m (97 lbf•**in**).
19. Carry out a fuel system leak test, refer to *FUEL SYSTEM PRESSURIZATION* in this section.

⚠ WARNING

After working on the fuel system, carry out a fuel system pressurization test to check for leaks. Failure to carry out a fuel system leak test could result in severe injury or a life threatening situation should a leak occur.

20. Refuel tank.

DIAPHRAGM FUEL PUMP (500SS/600/800R)

Fuel Pump Test

Check fuel pump valves operation as follows:

1. Empty fuel tank.

NOTE: For the following test, ensure hoses have a tight fit.

2. Disconnect outlet hose from fuel tank.
3. Alternately apply pressure and vacuum with pump from leak test kit to disconnected hose. The inlet valve should release with pressure and hold under vacuum.
4. Disconnect inlet hose from carburetor.

www.midwestmanuals.com

5. Repeat the same procedure to disconnected hose. This time the outlet valve should hold with pressure and release under vacuum.

Fuel Pump Removal

1. Remove the primary air intake silencer.

NOTE: Do not disconnect cables from carburetors.

2. On 800R models, disconnect the TPS connector.
3. Install a SMALL HOSE PINCHER (P/N 295 000 076) on the fuel supply line close to the pump outlet.
4. Remove the Norma spring clamp and disconnect the carburetors fuel supply line at the fuel pump outlet.

NOTE: Use a rag and a container to recover the fuel flowing from the disconnected hose.

5. Install larger pinchers on the carburetor(s) coolant lines.
6. Remove Norma spring clamp and disconnect the impulse (vacuum) line at the fuel pump.
7. Disconnect carburetors from engine and move them aside for access to the fuel pump.
8. Remove screws securing fuel pump to chassis.

Fuel Pump Installation

1. Reverse the removal procedure.
2. Carry out a fuel system pressurization test to ensure there isn't a leak in the fuel system.

⚠ WARNING

After working on the fuel system, carry out a fuel system pressurization test to check for leaks. Failure to carry out a fuel system leak test could result in severe injury or a life threatening situation should a leak occur.

ELECTRIC FUEL PUMP (600 HO E-TEC)

Fuel Pump Test With B.U.D.S.

NOTE: Activating the fuel pump as described in this procedure can be used for purging air from the fuel system whenever a fuel hose has been disconnected and reconnected. The pump should be activated for 15 seconds to ensure proper purging of the system.

1. Connect vehicle to the latest B.U.D.S. software, refer to *COMMUNICATION TOOLS AND B.U.D.S. SOFTWARE* subsection.
2. In B.U.D.S., select the following to activate the fuel pump.
   - 2.1 **Read Data**
   - 2.2 **Activation** tab
   - 2.3 **ECM** tab in the lower LH corner of the **Activation** page
   - 2.4 **Fuel Pump (Click/Hold)** button in the **Activate** field.
3. Listen for fuel pump operation.

NOTE: The fuel pump should run as long as you hold the **Fuel Pump (Click/Hold)** button in B.U.D.S.

If you do not hear the pump come ON, select the **Faults** tab in B.U.D.S. and check for fault codes.

If there is no fault code, connect a known good fuel pump to the vehicle harness (in parallel) and repeat the test.

If the second fuel pump functions when connected to the vehicle harness, then replace the fuel pump installed in the vehicle.

Fuel Pump Pressure Test

Refer to *INSPECTION* in this section.

Fuel Pump Removal

1. Connect vehicle to the latest B.U.D.S. software, refer to the *COMMUNICATION TOOLS AND B.U.D.S. SOFTWARE* section.
2. Release the fuel pressure in the system by selecting the following in B.U.D.S.:
   - **Read Data**
   - **Activation** tab
   - **ECM** tab in the lower LH corner of the **Activation** page
   - **Fuel Press. Relief** button in the **Activate** field.

www.midwestmanuals.com

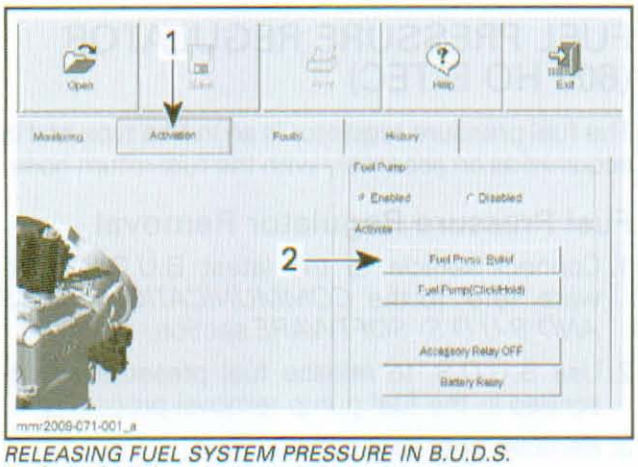

RELEASING FUEL SYSTEM PRESSURE IN B.U.D.S.
1. *Activation tab*
2. *Fuel Press. Relief button on ECM page*

3. Disconnect magneto connector.

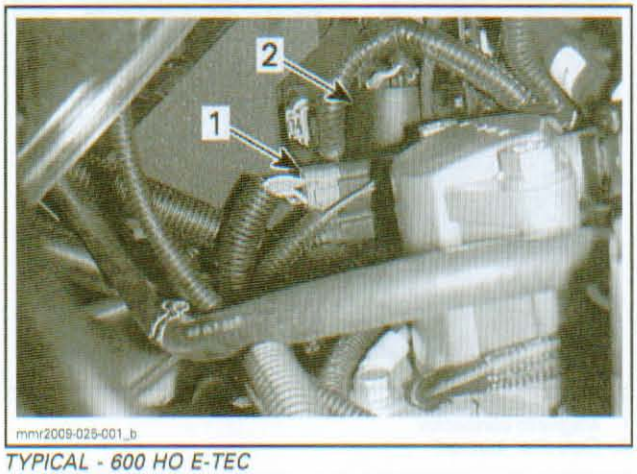

TYPICAL - 600 HO E-TEC
1. *Magneto connector*
2. *Capacitor support*

⚠ WARNING

The magneto connector must be disconnected to prevent any spark in the engine compartment and to remove power from the fuel pump. Otherwise, if engine is cranked, fuel vapors may ignite in presence of a spark creating a fire hazard.

Follow procedures for removing fuel tank and move fuel tank back for access to fuel pump. Refer to *FUEL TANK REMOVAL* in this section.

4. Disconnect fuel pump as described in the *FUEL TANK REMOVAL* procedure in this section.
5. Using the FUEL PUMP NUT TOOL (P/N 529 036 118), remove fuel pump spanner nut.

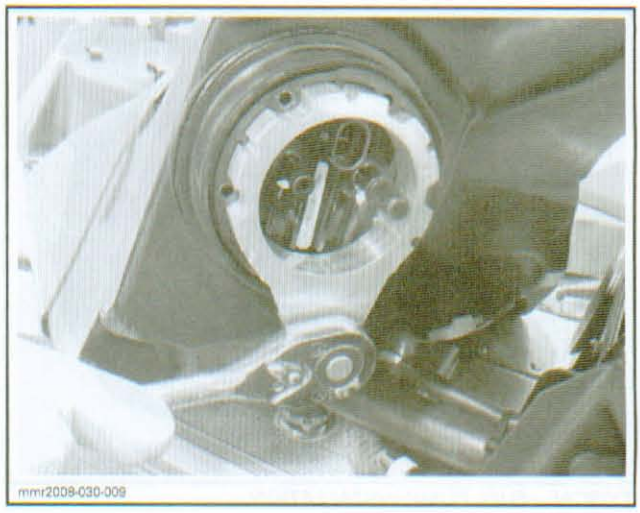

6. Remove fuel pump assembly from fuel tank.

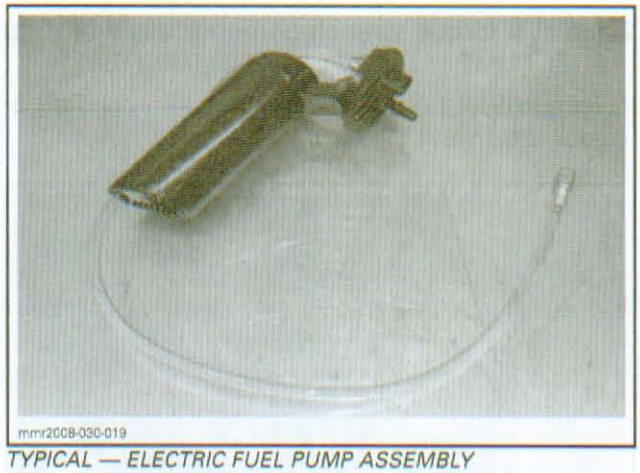

TYPICAL — ELECTRIC FUEL PUMP ASSEMBLY

7. Remove and discard fuel pump gasket.

Fuel Pump Installation

For installation, reverse the removal procedure however, pay attention to the following.

1. Install a NEW gasket on the fuel pump prior to installing the pump in the tank.

NOTE: The gasket must be installed on the fuel tank side so it is located between the pump and the fuel tank.

www.midwestmanuals.com

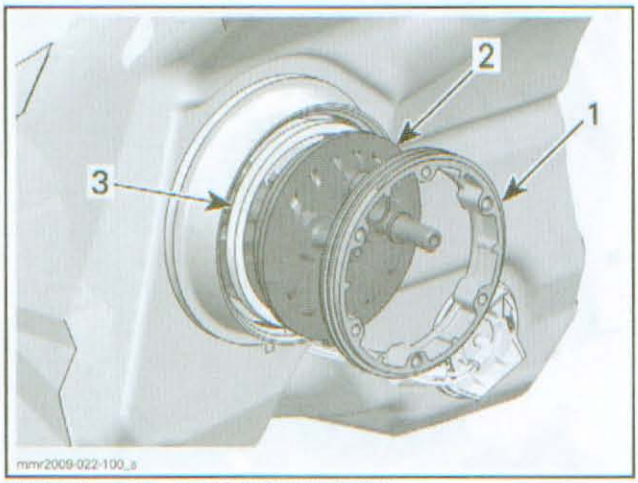

TYPICAL - FUEL PUMP INSTALLATION
1. *Fuel pump spanner nut*
2. *Fuel pump face plate*
3. *Fuel pump gasket*

2. Install a torque wrench perpendicularly (90°) to FUEL PUMP NUT TOOL (P/N 529 036 118).
3. Torque fuel pump spanner nut as specified in exploded view.

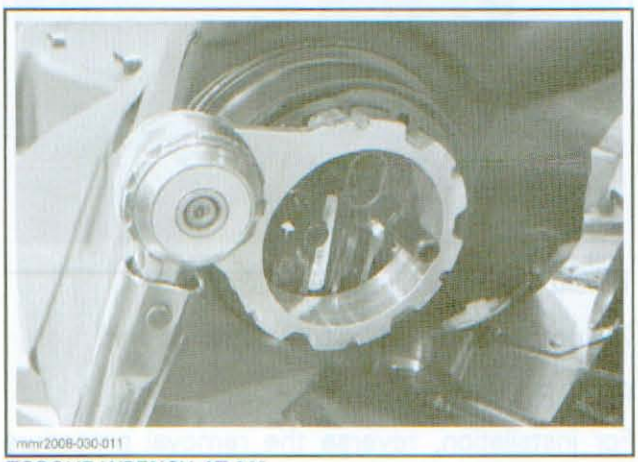

TORQUE WRENCH AT 90°

4. To reconnect fuel pump and install fuel tank, refer to the *FUEL TANK INSTALLATION* procedure in this section.
5. Carry out a fuel system leak test, refer to *FUEL SYSTEM PRESSURIZATION* in this section.

⚠ WARNING

After working on the fuel system, carry out a fuel system pressurization test to check for leaks. Failure to carry out a fuel system leak test could result in severe injury or a life threatening situation should a leak occur.

FUEL PRESSURE REGULATOR (600 HO E-TEC)

The fuel pressure regulator is an in-line type and is acquired as an assembly with the fuel return hose.

Fuel Pressure Regulator Removal

1. Connect vehicle to the latest B.U.D.S. software, refer to the *COMMUNICATION TOOLS AND B.U.D.S. SOFTWARE* section.
2. Use B.U.D.S. to release fuel pressure as described in the fuel pump removal procedure.
3. Remove both side panels.
4. Disconnect magneto connector.

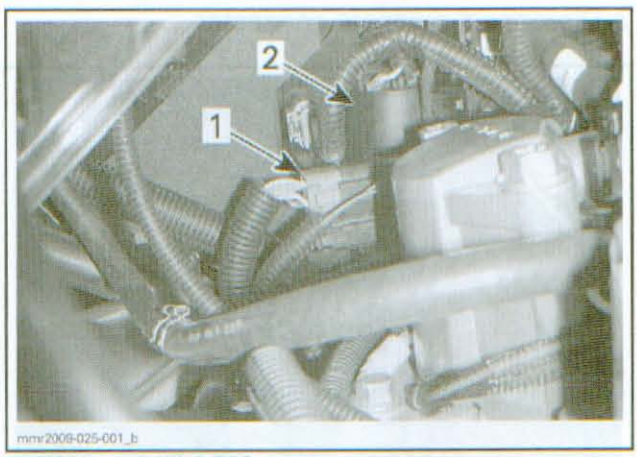

TYPICAL - 600 HO E-TEC
1. *Magneto connector*
2. *Capacitor support*

⚠ WARNING

The magneto connector must be disconnected to prevent any spark in the engine compartment and to remove power from the fuel pump. Otherwise, if engine is cranked, fuel vapors may ignite in presence of a spark creating a fire hazard.

5. Cut the locking ties securing the fuel return hose to the fuel supply hose and to the upper column.
6. Pull back corrugated plastic sheath and install a small hose pincher on the return hose forward of the fuel pressure regulator.
7. Remove and discard Oetiker clamp on the fuel return hose aft of the fuel pressure regulator.

www.midwestmanuals.com

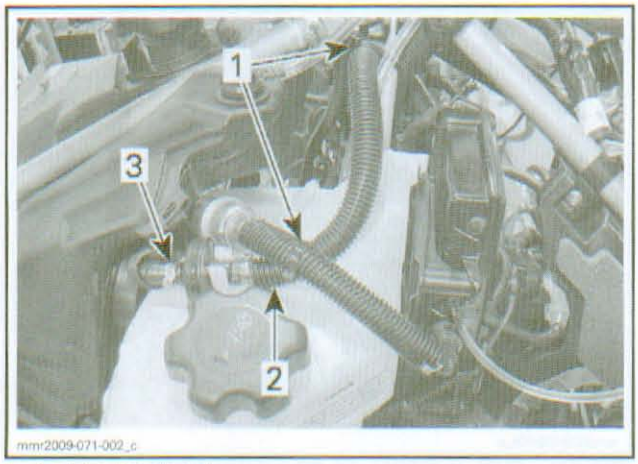

1. Locking ties to cut
2. Pull back plastic sheath and install hose pincher here
3. Remove this Oetiker clamp

8. Disconnect fuel return hose from the pressure regulator fitting.

NOTE: Place a container under the fuel return hose and drain the fuel remaining in hose.

9. Remove fuel pressure regulator from holder on oil tank.
10. Place a container under the pressure regulator, remove the hose pincher, and drain the fuel in the hose.
11. Disconnect the fuel return hose from both fuel injectors, refer to the *E-TEC DIRECT FUEL INJECTION* section for specific details.

NOTE: Be sure to place shop rags around the injector hose fittings to catch the fuel spillage.

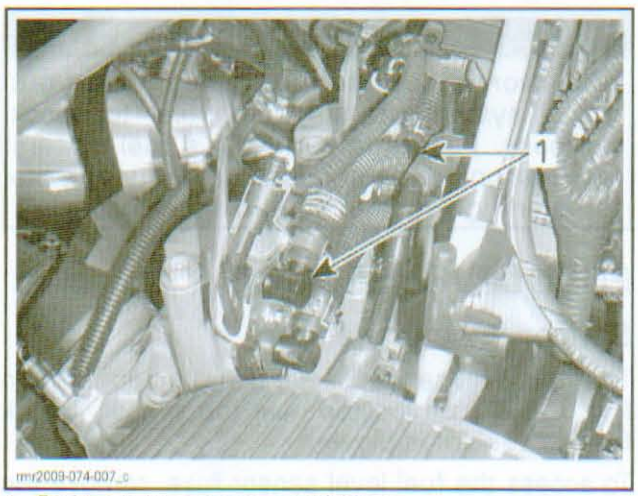

1. Fuel return hose to remove at injectors

12. Remove fuel pressure regulator hose assembly from vehicle.

Fuel Pressure Regulator Installation

For installation, reverse the removal procedures. However, pay attention to the following.

Be sure to strictly follow the procedures in the *E-TEC DIRECT FUEL INJECTION* section when reconnecting fuel return hose to injectors.

Install a NEW Oetiker clamp to retain the fuel return hose to the fuel pressure regulator.

⚠ WARNING

Ensure hose clamp is tight and that hose cannot turn on the fitting.

When installation is complete, carry out a fuel system leak test, refer to *FUEL SYSTEM PRESSURIZATION* in this section.

⚠ WARNING

After working on the fuel system, carry out a fuel system pressurization test to check for leaks. Failure to carry out a fuel system leak test could result in severe injury or a life threatening situation should a leak occur.

IN-LINE FUEL FILTER (600 HO E-TEC)

In-line Fuel Filter Removal

1. Connect vehicle to the latest B.U.D.S. software, refer to the *COMMUNICATION TOOLS AND B.U.D.S. SOFTWARE* section.
2. Use B.U.D.S. to release fuel pressure as described in the fuel pump removal procedure.
3. Remove both side panels.
4. Disconnect magneto connector.

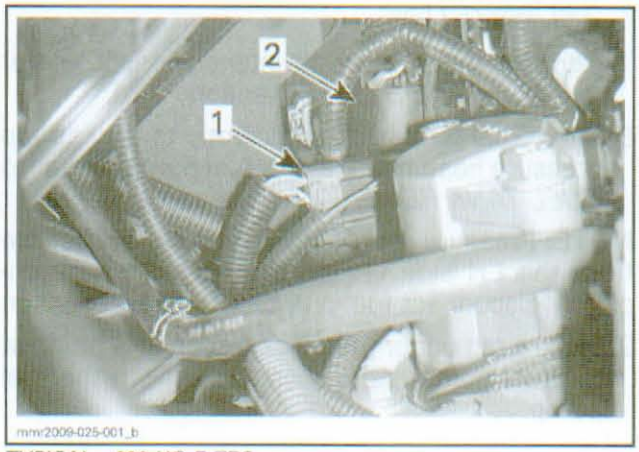

TYPICAL - 600 HO E-TEC
1. Magneto connector
2. Capacitor support

www.midwestmanuals.com

⚠ WARNING

The magneto connector must be disconnected to prevent any spark in the engine compartment and to remove power from the fuel pump. Otherwise, if the engine is cranked, fuel vapors may ignite in presence of a spark creating a fire hazard.

5. Cut the locking ties securing the fuel return hose to the fuel supply hose.

⚠ WARNING

Work in a well ventilated area. Wipe up all spilled fuel.

6. Press the release button on the fuel pressure hose quick disconnect fitting and slowly pull the fitting off the ECM.

NOTE: Place a container under the hose fitting to recover residual fuel remaining in the system.

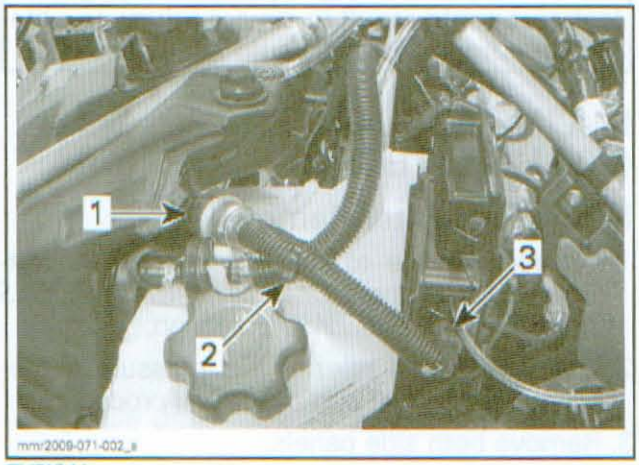

TYPICAL
1. *In line fuel filter*
2. *Locking tie to cut*
3. *Quick disconnect fitting*

7. Remove the primary air intake silencer. Refer to *AIR INTAKE SYSTEM* section.
8. Move fuel tank back sufficiently to access the pressure hose fitting at the fuel pump. Refer to *FUEL TANK REMOVAL* in this section.

NOTE: Pressure hose fitting will be accessible from the LH side. It is not necessary to completely disconnect fuel pump or fuel level sensor.

9. Place a rag under the quick disconnect fitting at the fuel pump and disconnect it from the fuel pump.

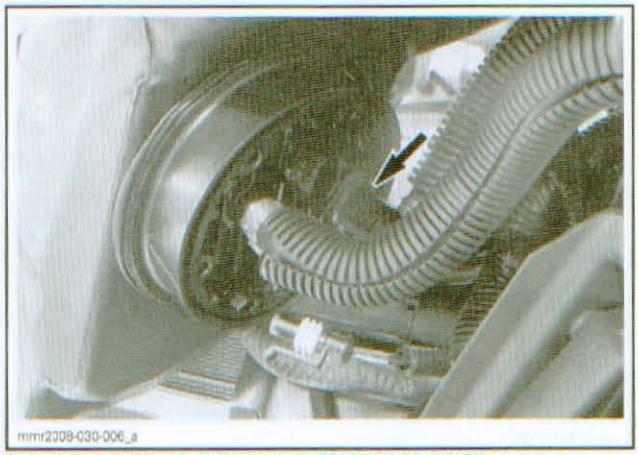

TYPICAL - FUEL SUPPLY LINE TO DISCONNECT

10. Remove fuel filter from vehicle.

In-line Fuel Filter Installation

The installation is the reverse of the removal procedure.

⚠ WARNING

Ensure hose clamp is tight and that hose cannot turn on the fitting.

When reconnecting quick disconnect pressure fittings to fuel pump and ECM, be sure to pull on the each end of the hose to ensure they are properly locked and secure.

When installation is complete, carry out a fuel system leak test, refer to *FUEL SYSTEM PRESSURIZATION* in this section.

⚠ WARNING

After working on the fuel system, carry out a fuel system pressurization test to check for leaks. Failure to carry out a fuel system leak test could result in severe injury or a life threatening situation should a leak occur.

FUEL LEVEL SENSOR

Sensor Fuse Inspection

The fuel level sensor circuit is protected by an in line 0.25 A fuse located near the sensor. Check fuse to see if it is blown.

To access the fuel level sensor fuse, remove the primary air intake silencer.

www.midwestmanuals.com

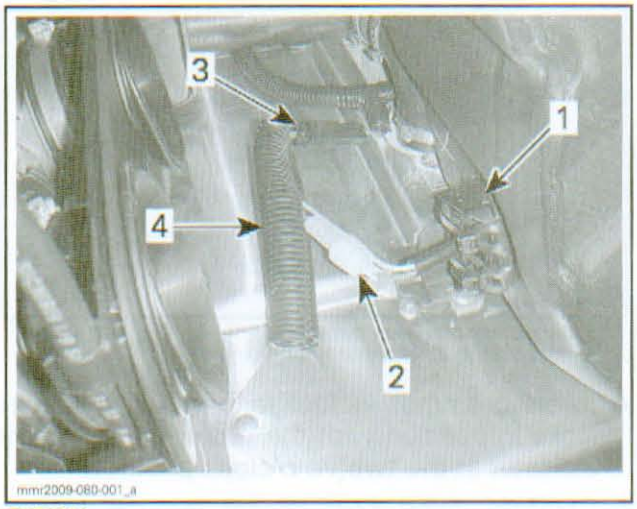

TYPICAL
1. *Fuel level sensor*
2. *In-line fuse*
3. *Connector*
4. *Corrugated plastic sheath*

Fuel Level Sensor Resistance Test

1. Obtain access to fuel level sensor connector, refer to *FUEL TANK REMOVAL* in this section.
2. Disconnect fuel level sensor.

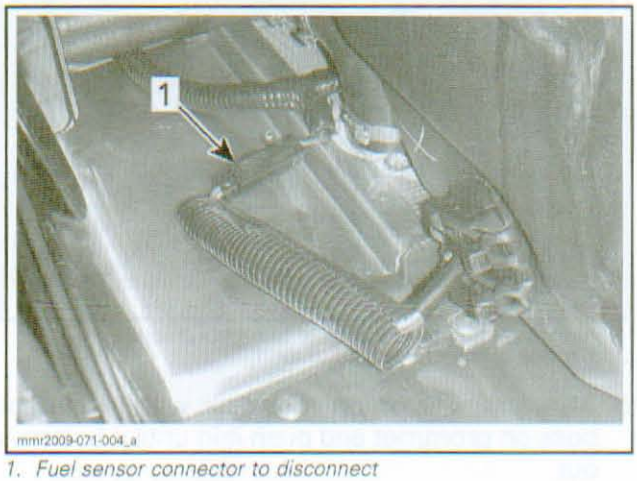

1. *Fuel sensor connector to disconnect*

3. Connect the FLUKE 115 MULTIMETER (P/N 529 035 868) between the two pins in the sensor connector and set it to Ω.
4. Test resistance of sensor as follows.

FUEL LEVEL SENSOR RESISTANCE TEST	
Full level resistance value	7 Ω ± 3 Ω
Empty level resistance value	95 Ω ± 5 Ω

Replace sensor if not as specified in table.

Fuel Level Sensor Removal

1. Drain fuel tank.
2. Move fuel tank back sufficiently to access fuel sensor and connector. Refer to *FUEL TANK REMOVAL* in this section.

NOTE: It is not necessary to disconnect fuel pump.

3. Disconnect fuel sensor connector.

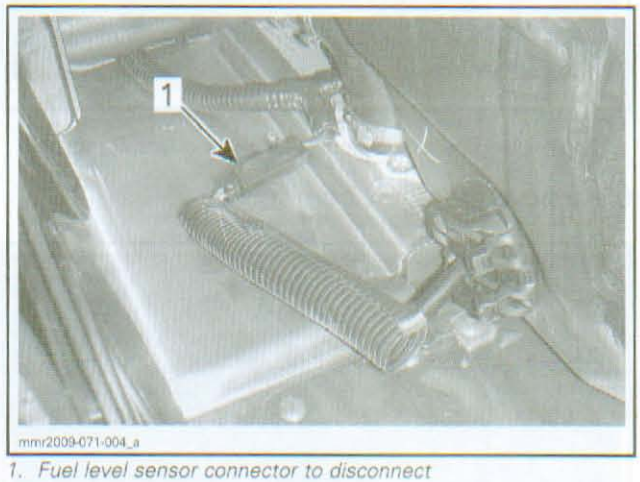

1. *Fuel level sensor connector to disconnect*

4. Cut locking ties securing grommet.

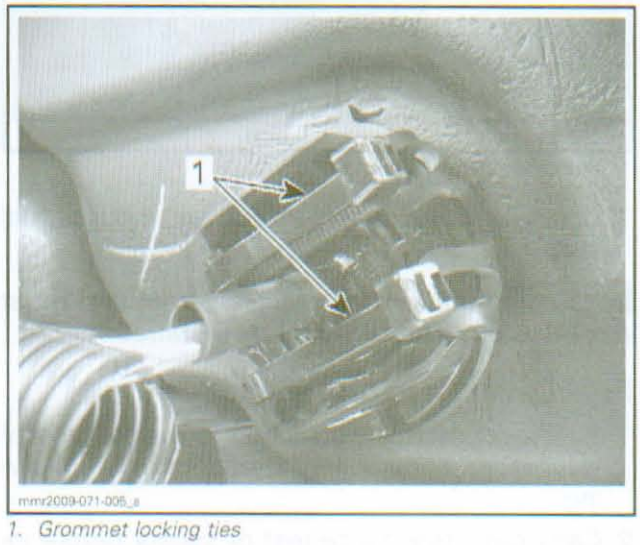

1. *Grommet locking ties*

5. Insert a screwdriver between grommet and sensor face plate. Gently pry sensor loose in grommet.

NOTE: Do not try to remove sensor from grommet at this time.

www.midwestmanuals.com

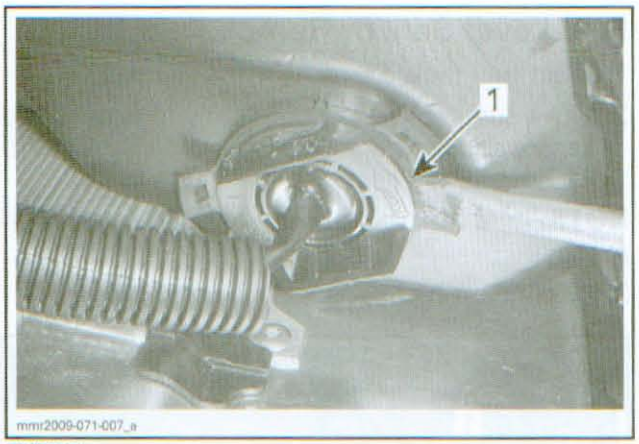

TYPICAL
1. *Screwdriver inserted between grommet and face of sensor*

6. Remove grommet from fuel tank.

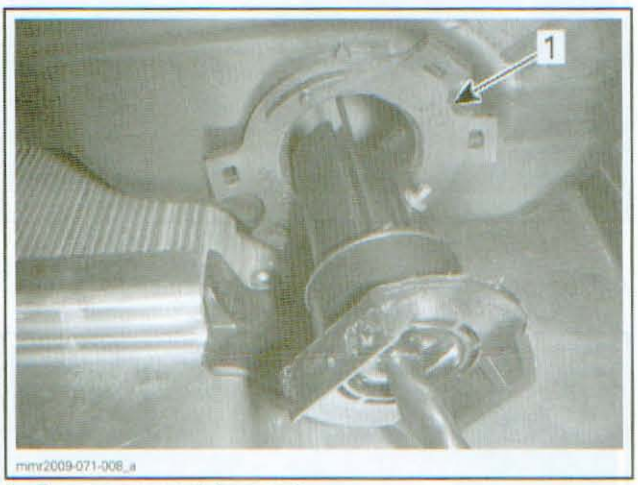

1. *Remove grommet from tank*

7. Carefully rotate sensor as you pull it out of fuel tank.

NOTICE **Float arm is precisely bent and must not be altered on removal or installation.**

Fuel Level Sensor Installation

1. Fuel level sensor installation is the reverse of removal procedure. Pay attention to the following.
2. Carry out a resistance test of sensor before installation, refer to *FUEL LEVEL SENSOR RESISTANCE TEST* in this section.
3. To ease grommet and fuel level sensor installation, spray a fine mist of plain water (NO SOAP) on outer beveled surface and inner surface of grommet.

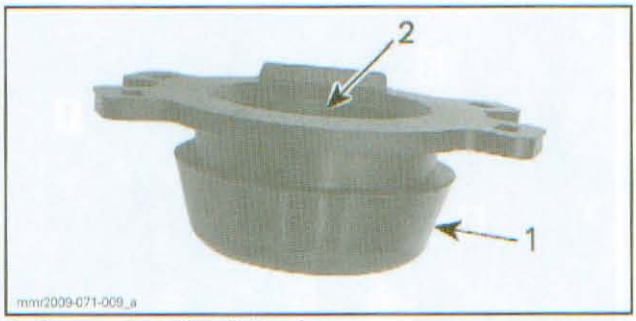

1. *Spray water on beveled surface*
2. *Spray water on inner diameter of grommet*

4. Insert grommet in fuel tank ensuring it fully locks in position with the grommet alignment indicator at the **twelve o'clock position**.
5. Carefully insert float sensor through hole in grommet gently rotating it in position.

NOTE: Ensure the flat side of sensor is pointing in a general upwards direction.

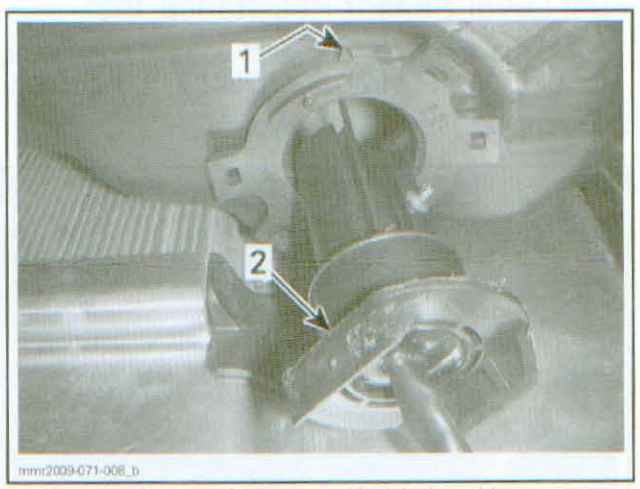

1. *Alignment indicator facing up at 12 o'clock position*
2. *Flat side of sensor upwards position*

6. Align top flat portion of sensor with alignment boss on grommet and push it in until it bottoms out.

www.midwestmanuals.com

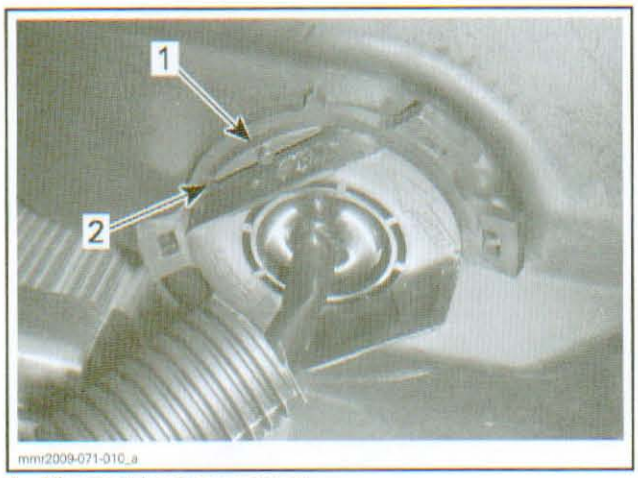

1. *Alignment boss on grommet*
2. *Flat side of sensor aligned to grommet*

NOTE: Note the angle at which the fuel level sensor is positioned. Some fuel tanks may have 2 alignment index marks molded on the fuel tank side. Disregard the index marks on fuel tank. The sensor **must be** aligned with the grommet alignment boss, and the **grommet alignment indicator must be at the twelve o'clock position** for proper sensor operation.

7. Install locking ties to secure grommet on fuel level sensor.

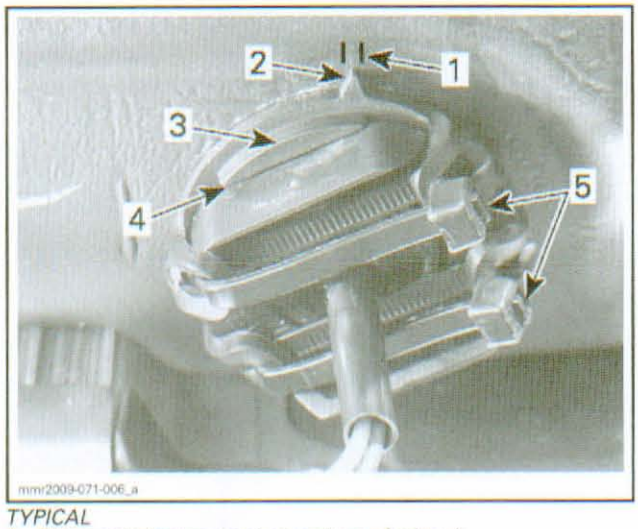

TYPICAL
1. *Disregard alignment index marks on fuel tank*
2. *Grommet alignment indicator must be at twelve o'clock*
3. *Sensor alignment boss on grommet*
4. *Sensor aligned to grommet boss*
5. *Locking ties secured*

8. Use DIELECTRIC GREASE (P/N 293 550 004) in connector to prevent corrosion.
9. Carry out a fuel system leak test, refer to *FUEL SYSTEM PRESSURIZATION* in this section.
10. Test fuel level indication as you fill fuel tank before you complete reassembly of vehicle.

OETIKER CLAMPS

Clamp Replacement

To secure or cut Oetiker clamps on fuel lines, use PLIERS OETIKER 1099 (P/N 295 000 070).

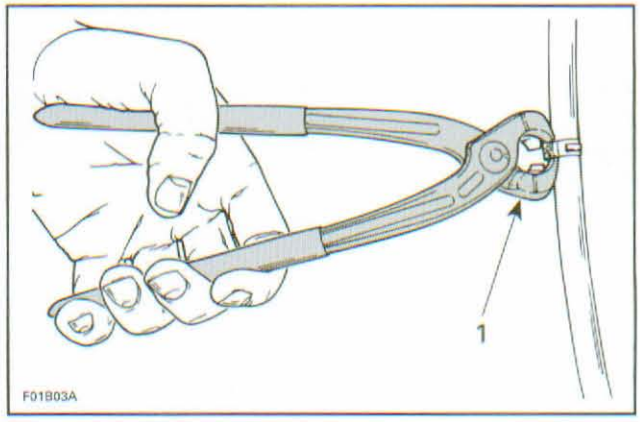

1. *Cutting clamp*

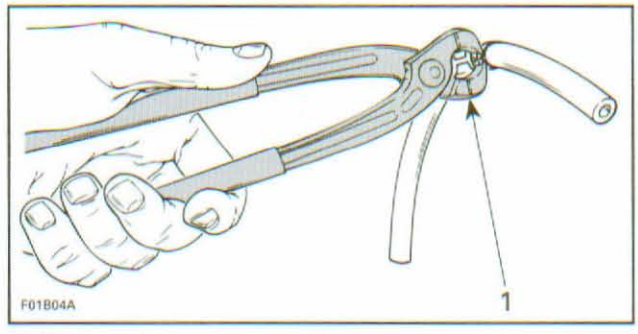

1. *Securing clamp*

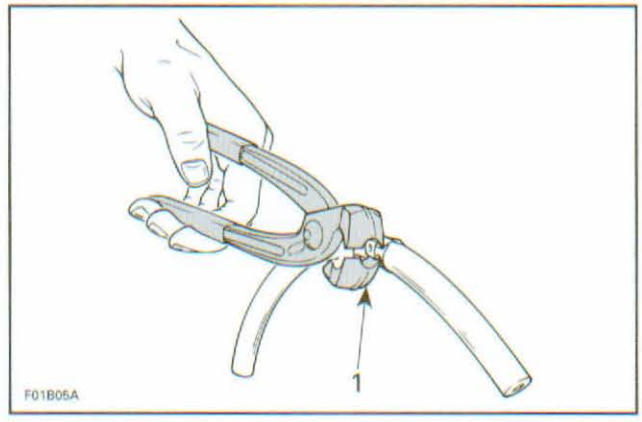

1. *Securing clamp in limited access*

⚠ WARNING

Use of improper fuel lines could compromise fuel system integrity.

www.midwestmanuals.com

www.midwestmanuals.com

TM CARBURETORS

SERVICE TOOLS

Description	Part Number	Page
CARBURETOR TOOL KIT	404 112 000	253
DIGITAL INDUCTIVE TYPE TACHOMETER	529 014 500	257
SMALL HOSE PINCHER	295 000 076	261
SUPPLY CABLE	529 035 997	260
SUPPLY HARNESS	529 035 869	260

SERVICE PRODUCTS

Description	Part Number	Page
DIELECTRIC GREASE	293 550 004	263
LOCTITE 243 (BLUE)	293 800 060	255, 261

www.midwestmanuals.com

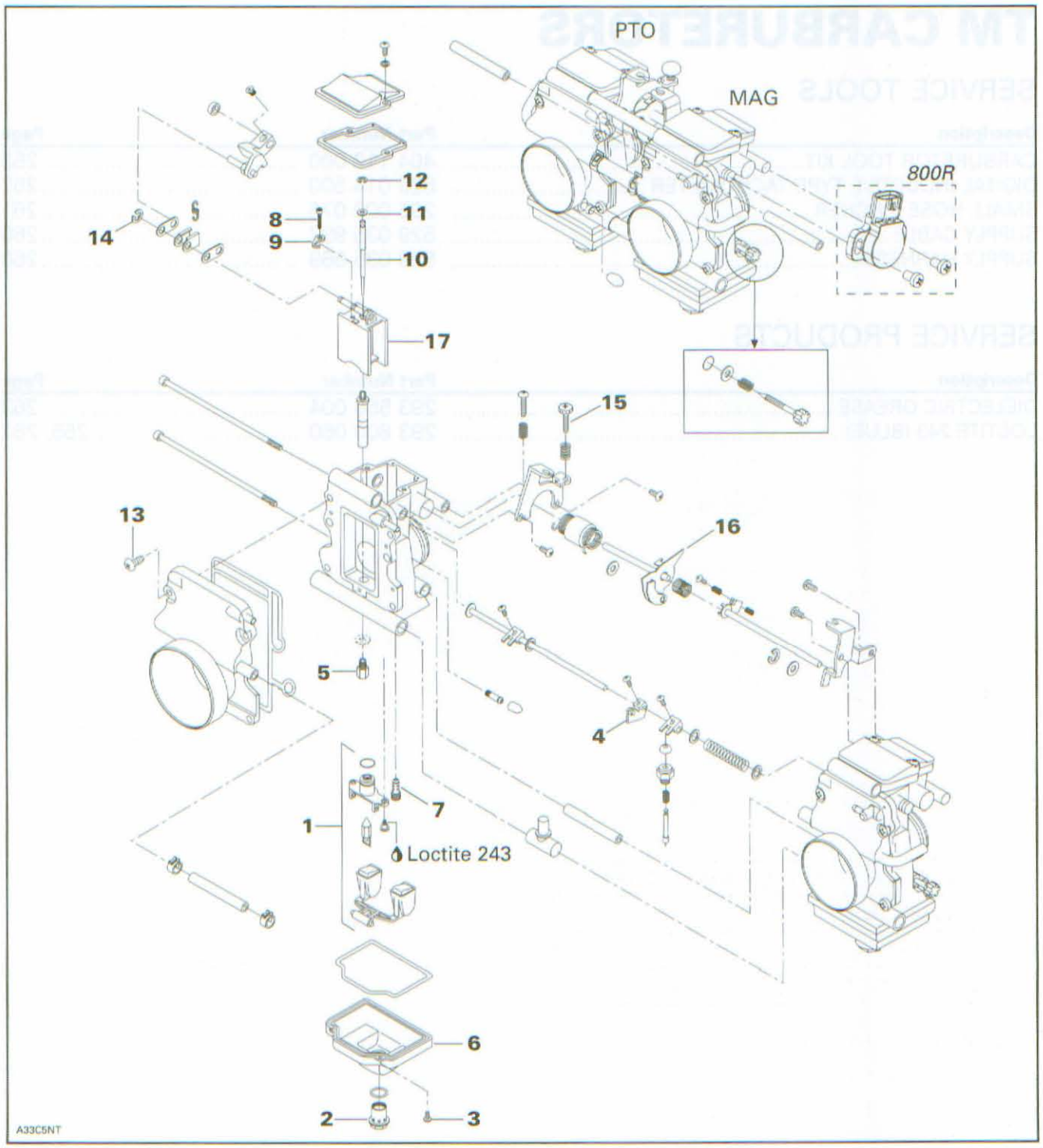

www.midwestmanuals.com

PROCEDURES

CARBURETORS

NOTE: On **800R** models, it is a good practice to check for fault codes using B.U.D.S. software as a first troubleshooting step. Refer to *MONITORING SYSTEM AND FAULT CODES* section.

Carburetor Identification

TM type dual carburetor assembly is identified on PTO side carburetor body.

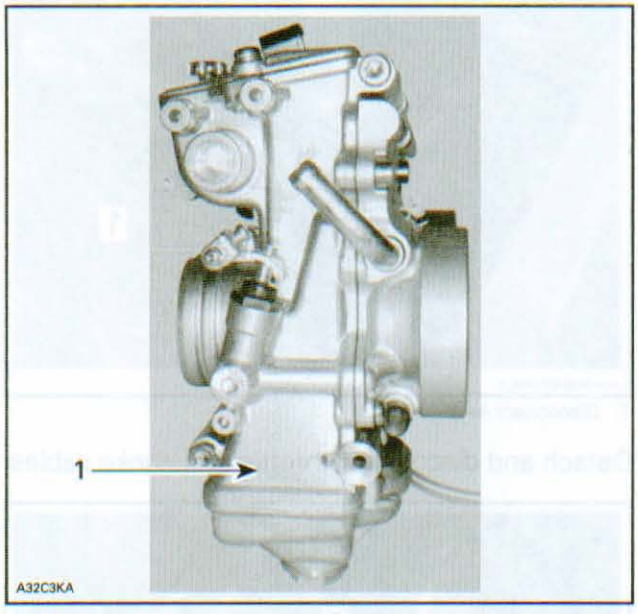

TYPICAL
1. Identification number

CARBURETOR IDENTIFICATION NUMBER	
500SS/600	TM40-394
800R (MX Z)	TM40-397
800R (SUMMIT)	TM40-400

Carburetor Removal

Remove LH side panel.

Remove belt guard. Refer to *DRIVE SYSTEM AND BRAKE* section.

Remove primary air intake silencer. Refer to *AIR INTAKE SYSTEM* section.

500SS/600

Disconnect vent hose.

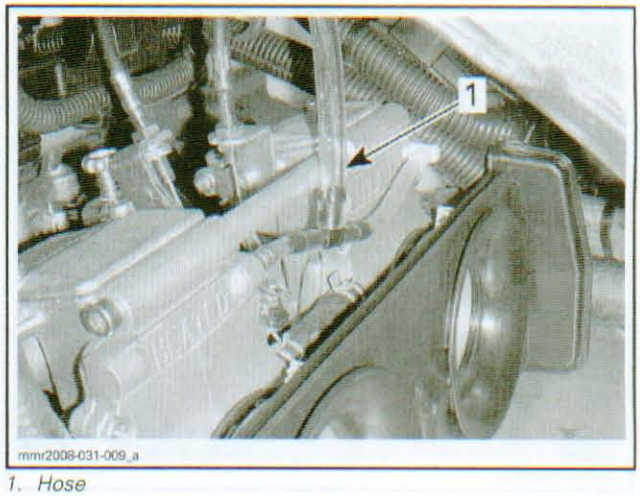

1. Hose

800R

Disconnect DPM manifold top hose and connector.

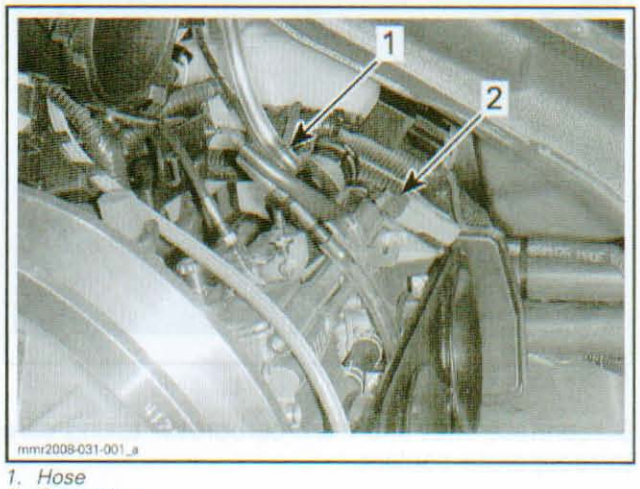

1. Hose
2. Connector

500SS/600/800R

Turn heated carburetor coolant inlet line valve to OFF position.

www.midwestmanuals.com

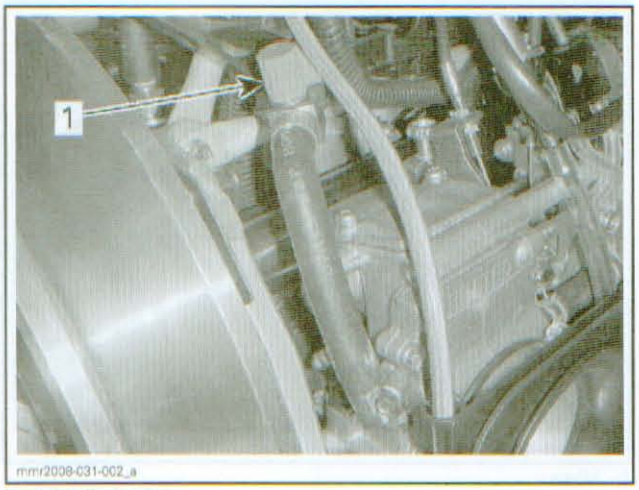

1. *Inlet line valve*

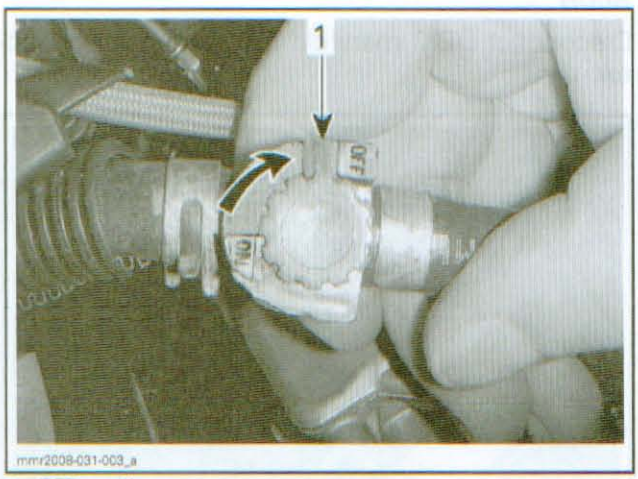

1. *OFF position*

Disconnect **inlet** line from carburetor taking care to recuperate coolant.

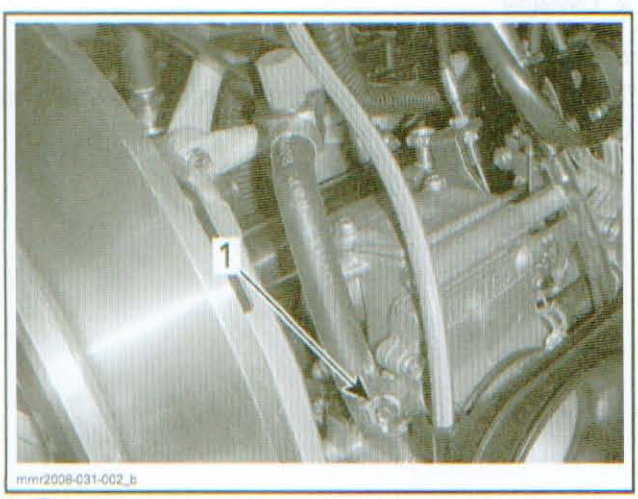

1. *Disconnect here*

Loosen clamps retaining carburetors to intake adapters.

Detach carburetors from intake adapters.

Lift carburetors then disconnect fuel line from fuel pump. Take care to recuperate fuel.

⚠ WARNING

Fuel is flammable and explosive under certain conditions. Always wipe off any fuel or oil spillage from the vehicle. Ensure work area is well ventilated. Do not smoke or allow open flames or sparks in the vicinity.

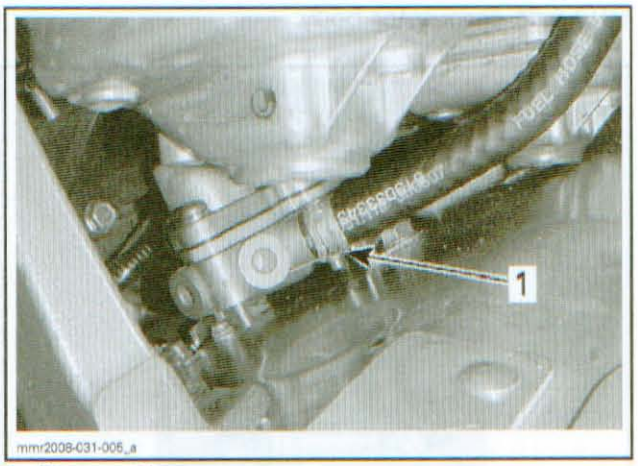

1. *Disconnect here*

Detach and disconnect throttle and choke cables.

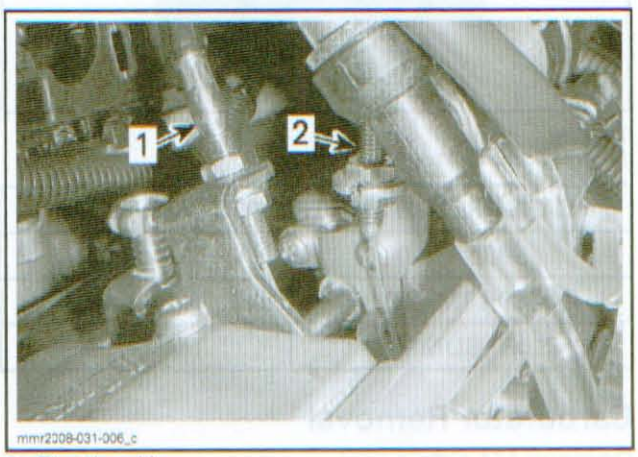

1. *Throttle cable*
2. *Choke cable*

800R

Disconnect TPS connector.

www.midwestmanuals.com

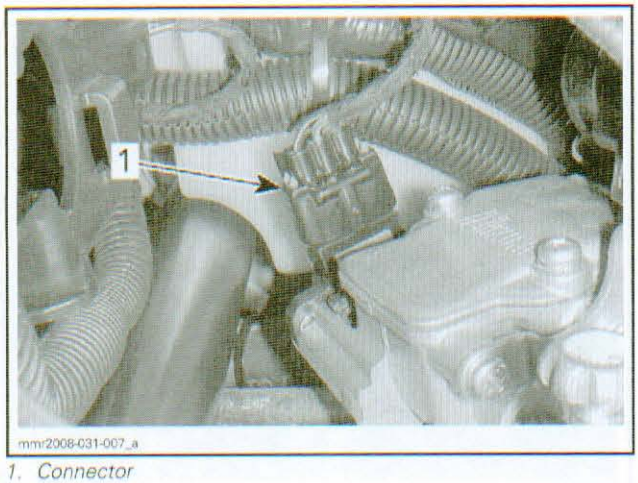

1. Connector

500SS/600/800R

Pinch and disconnect heated carburetor **outlet** line taking care to recuperate coolant.

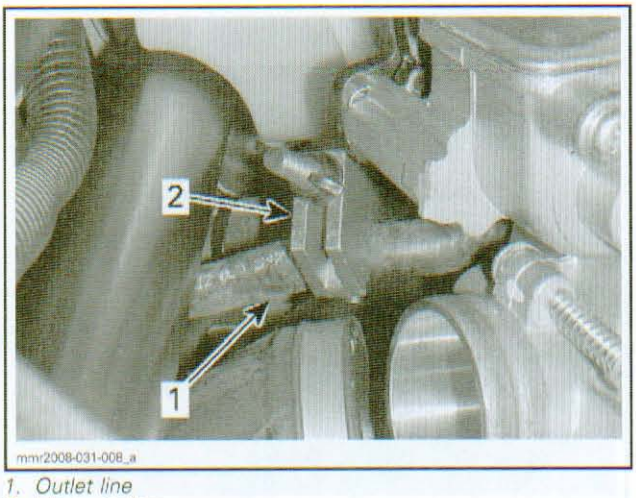

1. Outlet line
2. Hose pincher

Remove carburetors.

Carburetor Disassembly

NOTE: To ease the carburetor disassembly and assembly procedures, it is recommended to use the CARBURETOR TOOL KIT (P/N 404 112 000).

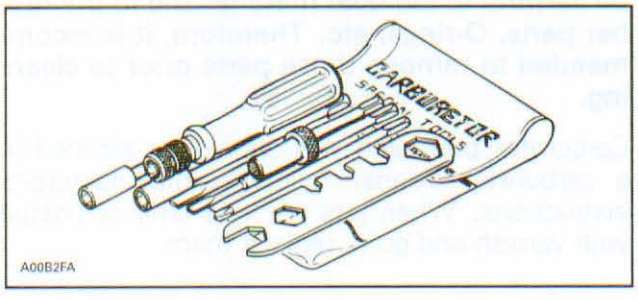

Float Bowl

Unscrew drain plug **no. 2** and screws **no. 3**.

Remove float bowl **no. 6**.

Float and Needle Valve Assembly

Unfasten both screws then, pull out float and needle valve assembly **no. 1**.

Main Jet

The main jet **no. 5** installed in the carburetor has been selected for a temperature of -18°C (0°F) at sea level. Different jetting can be installed to suit temperature and altitude changes. A Service Bulletin gives information about calibration according to altitude and temperature.

Main jet may be removed without removing float bowl **no. 6** by first removing drain plug **no. 2**.

Pilot Jet

Use narrow screwdriver from the CARBURETOR TOOL KIT (P/N 404 112 000) to unscrew pilot jet **no. 7**.

Throttle Slide

⚠ WARNING

It is critical to the free operation of the throttle slide that the 2 connecting plates as assembled in one carburetor be of the exact same length. Always replace the connecting plates by a pair of new ones that were matched at the factory for length and discard the old ones. Simultaneously replace all the plates of the carburetors of a same rack.

Do not disassemble throttle slide **no. 17** needlessly.

NOTICE **After throttle slide reassembly, proceed with a leak test. See below for procedure.**

1. Disassemble both carburetors at the same time. Coolant hose between carburetor throttle slide covers must remain in place during the complete disassembly and assembly.
2. Remove carburetor cover.
3. Loosen needle retainer screw **no. 8**.
4. Fully open throttle and hold in this position.
5. Move aside needle retainer **no. 9**.

www.midwestmanuals.com

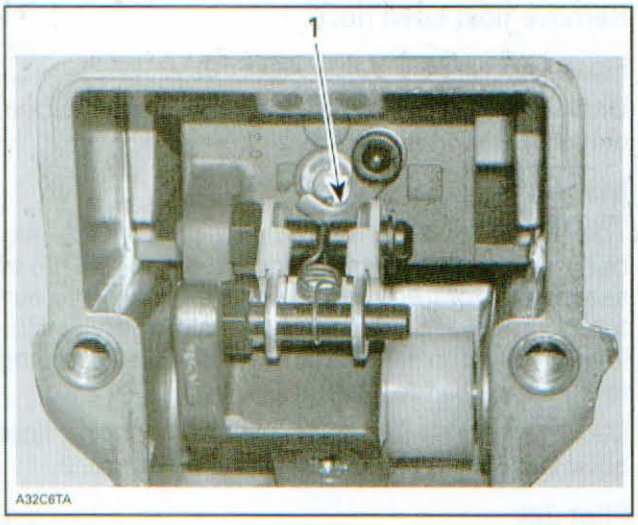

1. Needle retainer moved aside

6. Turn dual carburetor assembly upside down to free needle **no. 10**. Take care not to loose plastic washer **no. 11** under needle circlip **no. 12**.

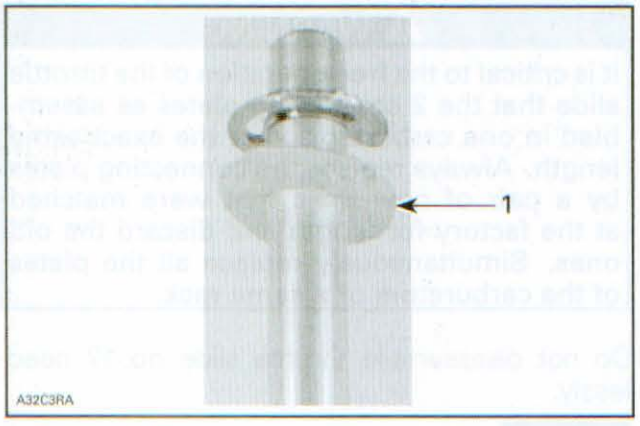

1. Plastic washer

7. Unscrew throttle slide cover screws **no. 13**.
8. Open throttle 3/4 wide and keep that opening.
9. Lift throttle slide covers bottom first until they are free from carburetor bodies. Then, slide them out.

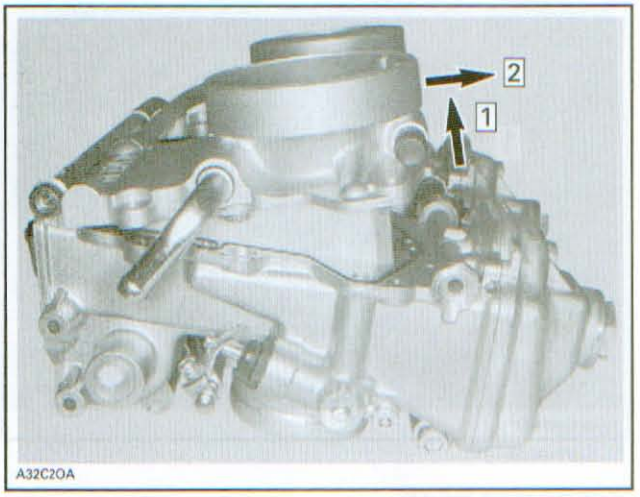

Step 1: Lift bottom first
Step 2: Slide out

10. Remove circlip **no. 14** retaining throttle slide.

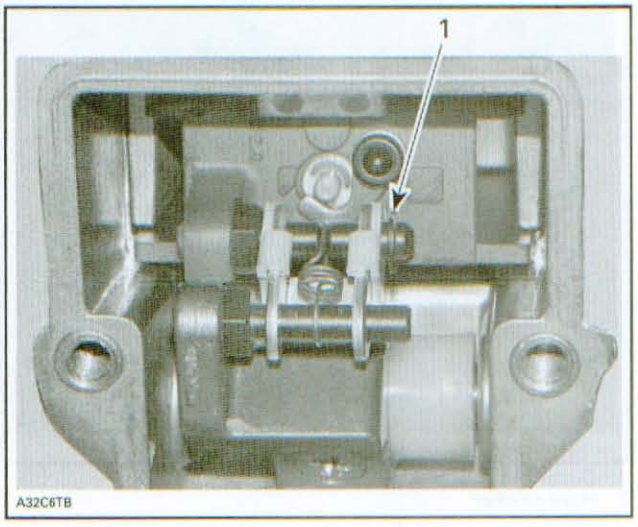

1. Circlip

Carburetor Cleaning

The entire carburetor should be cleaned with a general solvent and dried with compressed air.

NOTICE **Heavy duty carburetor cleaner may be harmful to the float material and to the rubber parts, O-rings, etc. Therefore, it is recommended to remove those parts prior to cleaning.**

Carburetor body and jets should be cleaned in a carburetor cleaner following manufacturer's instructions. When jets are very dirty or coated with varnish and gum, replace them.

www.midwestmanuals.com

⚠ WARNING

Solvent with a low flash point such as gasoline, naphtha, benzol, etc., should not be used as they are flammable and explosive.

Carburetor Inspection

1. Check throttle slide for wear. Replace as necessary.
2. Check for fuel soaked into float **no. 1**; replace as necessary.
3. Check float for cracks or other damages affecting free movement; replace as necessary.

Carburetor Assembly

The assembly is the reverse of the disassembly procedure. Pay attention to the following.

Float and Needle Valve Assembly

Apply LOCTITE 243 (BLUE) (P/N 293 800 060) on screw threads.

Throttle Slide

At throttle slide assembly, needle retainer must face carburetor body.

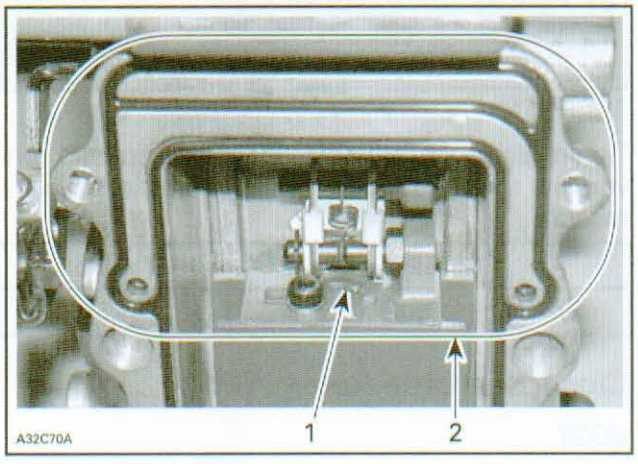

1. Needle retainer
2. Ensure O-ring gasket is properly seated in nipple area

After inserting throttle slide cover in place and before installing screws, ensure O-ring gasket is properly seated in its groove especially in the area around vent nipple. See illustration above.

Carburetor Installation

The installation is the reverse of the removal procedure. However, pay attention to the following.

If carburetors were disassembled, adjustments should be performed following this sequence:

1. Carburetor synchronization
2. Pilot screw adjustment
3. Closed throttle reset (TPS) (800R)
4. Throttle cable adjustment
5. Idle speed adjustment
6. Choke cable adjustment.

Refer to procedures in this section in regards with these adjustments.

Carburetor Synchronization

To ensure throttle cable does not pull on throttle slide, do the following:

1. Loosen throttle cable housing adjusting and locking nuts.

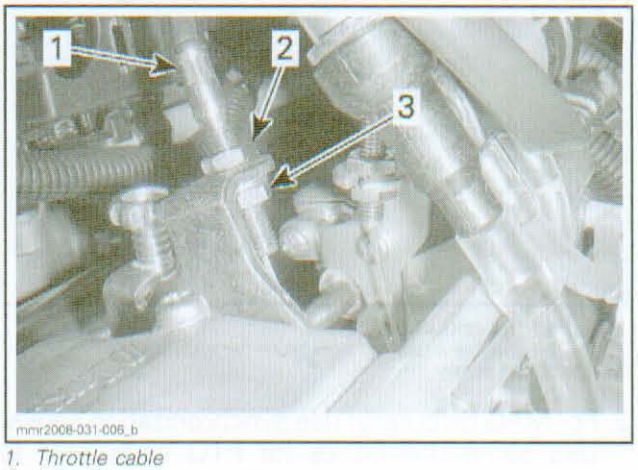

1. Throttle cable
2. Adjusting nut
3. Locking nut

2. Unscrew idle speed screw until there is a gap between tip of screw and throttle lever stopper.

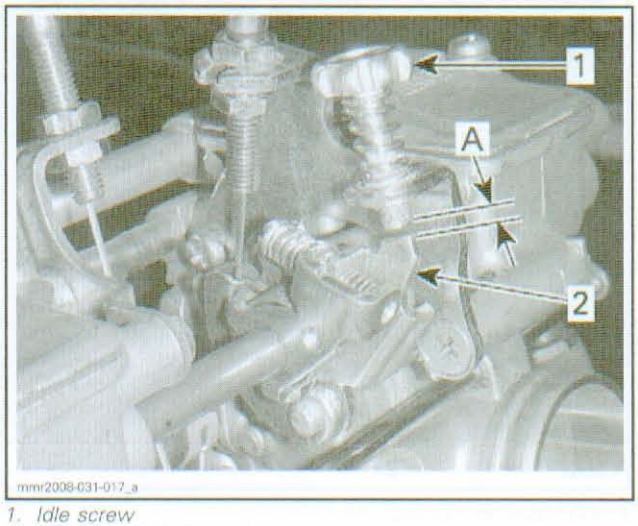

1. Idle screw
2. Throttle lever stopper
A. Gap required here

www.midwestmanuals.com

To perform carburetor synchronization, first proceed on PTO carburetor.

1. Use a drill bit to measure flat slide height (see following table) on **outlet** side of carburetor (engine side).
2. Adjust by turning idle speed screw **no. 15**.

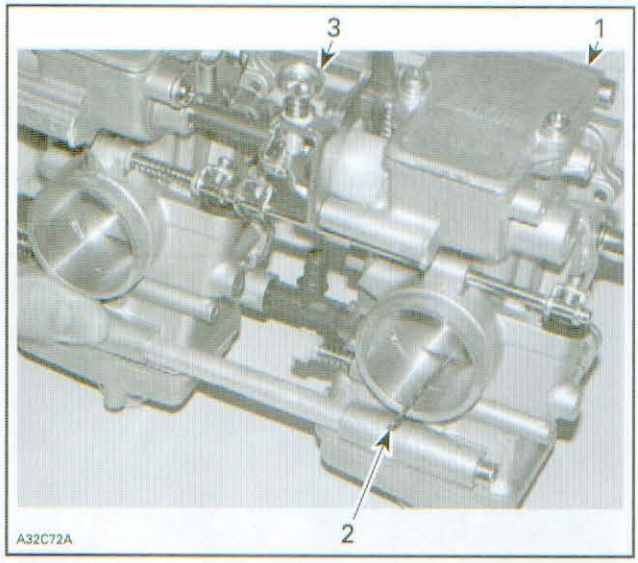

1. Adjust PTO carburetor first
2. Drill bit used as a gauge to measure flat slide height
3. Idle speed screw

3. For MAG carburetor use synchronization screw. Use same drill bit as for PTO carburetor to measure flat slide height. Turn synchronization screw to adjust.

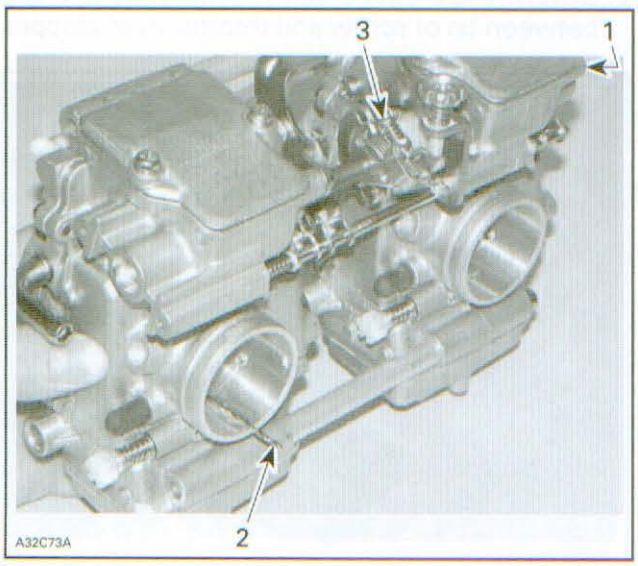

1. PTO carburetor adjusted first
2. Drill bit used as a gauge to measure flat slide height
3. Synchronization screw

MODEL	FLAT SLIDE HEIGHT (DRILL BIT SIZE)
500SS/600	1.5 mm ± 0.1 mm (.059 in ± .004 in)
800R	Summit: 2.0 mm ± 0.1 mm (.079 in ± .004 in) Others: 1.6 mm ± 0.1 mm (.063 in ± .004 in)

Pilot Screw Adjustment

Completely close the pilot screw (until a slight seating resistance is felt) then back off as specified.

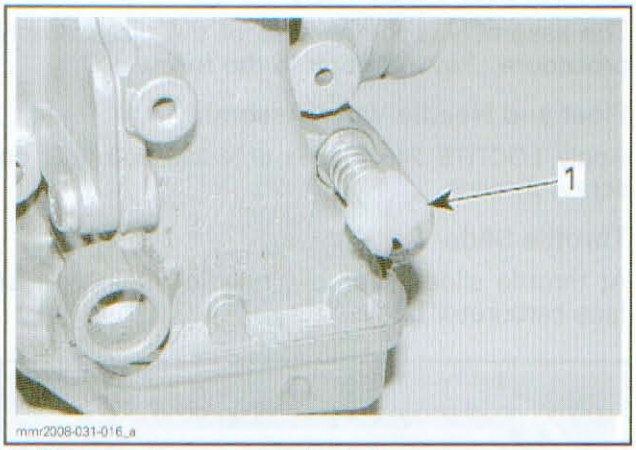

1. Pilot screw (one on each carburetor)

Turning screw in clockwise leans mixture and conversely, turning it out counterclockwise enriches mixture.

ENGINE	TURNS
500SS/600/800R	1.5

Closed Throttle Reset (TPS)

800R

This reset is very important. The setting of the TPS will determine the basic parameters for all fuel and ignition mappings. An improperly set TPS may lead to poor engine performance.

Reset must be done each time one of the following conditions is met:

- Throttle position sensor (TPS) is loosened or removed
- Carburetor is replaced
- ECM is replaced.

Refer to *THROTTLE POSITION SENSOR (TPS)* in this section.

www.midwestmanuals.com

Idle Speed Adjustment

NOTICE Before starting engine for the idle adjustment, make sure that oil pump is adjusted. The oil pump adjustment must be checked after each time carburetor idle is adjusted. Refer to *LUBRICATION SYSTEM* section.

1. Start engine and allow it to warm.
2. Adjust idle speed to specifications by turning idle speed screw clockwise to increase engine speed or counterclockwise to decrease it.
3. Use a DIGITAL INDUCTIVE TYPE TACHOMETER (P/N 529 014 500) to set idle speed.

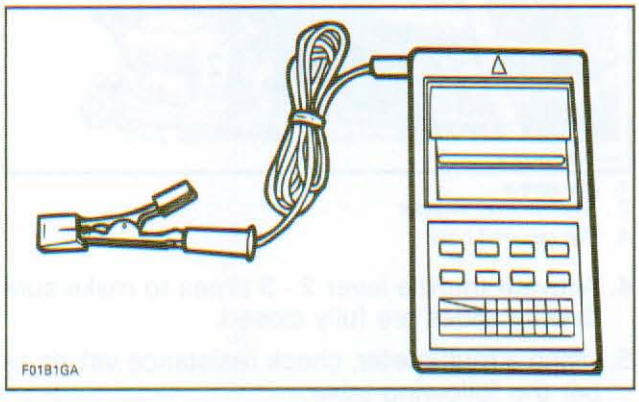

TACHOMETER

NOTICE Do not attempt to set the idle speed by using the pilot screw. Severe engine damage can occur.

MODEL	IDLE SPEED (RPM ± 200)
500SS/600	1600
800R	Summit: 1900 Others: 1600

THROTTLE POSITION SENSOR (TPS)

800R

General

The throttle position sensor (TPS) is a potentiometer that sends a signal to the ECM which is proportional to the throttle opening.

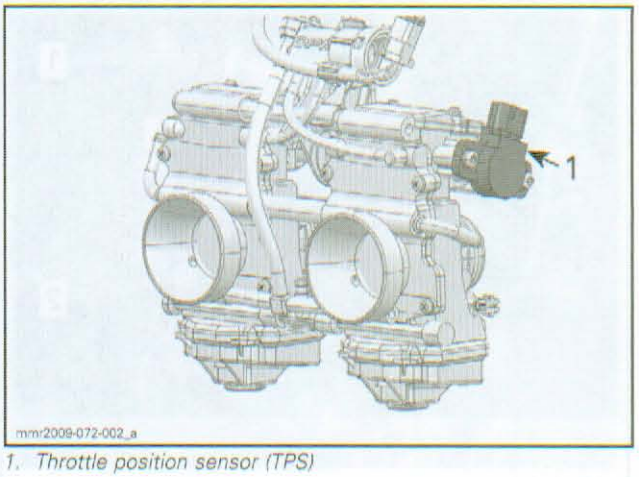

1. Throttle position sensor (TPS)

Before replacing the TPS, check the following as these could be causing the fault.

- Throttle cable adjustment too tight or there is not enough free-play. Not returning fully to idle stop.
- Throttle idle set screw is loose or worn.
- TPS is loose.
- Corroded or damaged wiring or connectors.
- Carburetors have been replaced and the **Closed Throttle** reset has not been performed.
- ECM has been replaced and the **Closed Throttle** reset has not been performed.

The ECM may generate several fault codes pertaining to the TPS. Refer to *MONITORING SYSTEM AND FAULT CODES* section for more information.

Closed Throttle Reset (TPS)

This reset is very important. The setting of the TPS will determine the basic parameters for all fuel and ignition mappings. An improperly set TPS may lead to poor engine performance.

Reset must be done each time one of the following conditions is met:

- Throttle position sensor (TPS) is loosened or removed.
- Carburetor is replaced.
- ECM is replaced.

1. Unscrew idle speed screw until there is a gap between tip of screw and throttle lever stopper.

www.midwestmanuals.com

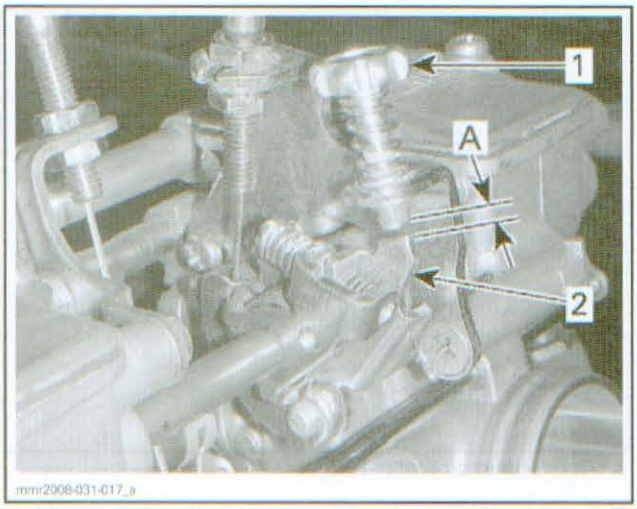

1. Idle screw
2. Throttle lever stopper
A. Gap required here

2. Use B.U.D.S. software.
3. Push the **Reset** button in the **Setting** tab of B.U.D.S.

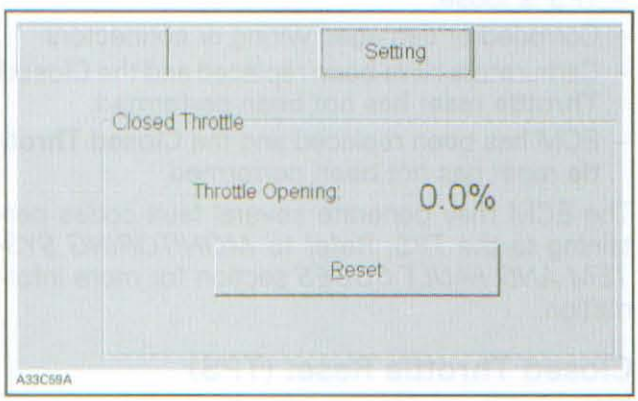

SETTING TAB

4. If TPS is not within the allowed range while re-setting the **Closed Throttle**, the ECM will generate a fault code and will not accept the setting. Verify the following:
   - 4.1 Ensure throttle cable has enough free-play (flat slides must be closed).
   - 4.2 Throttle position sensor (TPS).
   - 4.3 If reset is successful, check throttle cable adjustment.
   - 4.4 Adjust idle speed.

TPS Resistance Test

1. Disconnect ECM connector.
2. Unscrew idle speed screw until there is a gap with the throttle lever stopper.
3. IMPORTANT: Remember to perform the **Closed Throttle Reset** procedure when all tests will be done since the idle screw was loosened for the test.

NOTE: The gap between idle speed screw and stopper is important to ensure throttle slide is completely closed to read TPS resistance values.

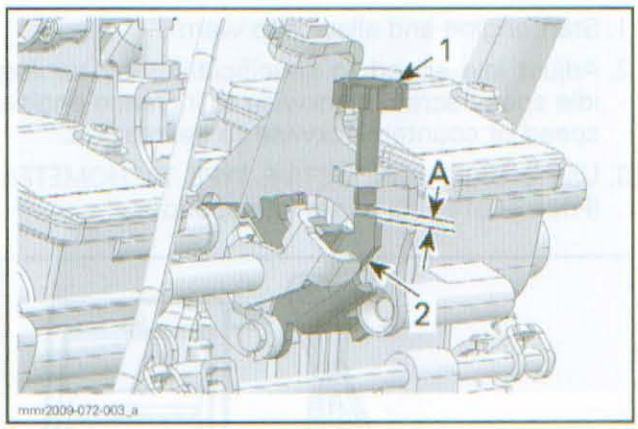

1. Idle screw
2. Throttle lever stopper
A. Gap required here

4. Activate throttle lever 2 - 3 times to make sure throttle slides are fully closed.
5. Using a multimeter, check resistance values as per the following table.

ECM CONNECTOR		THROTTLE POSITION	
PIN		IDLE	WIDE OPEN
22	4	3680 - 5520 Ω	480 - 720 Ω
22	1	4000 - 6000 Ω	
4	1	480 - 720 Ω	3680 - 5520 Ω

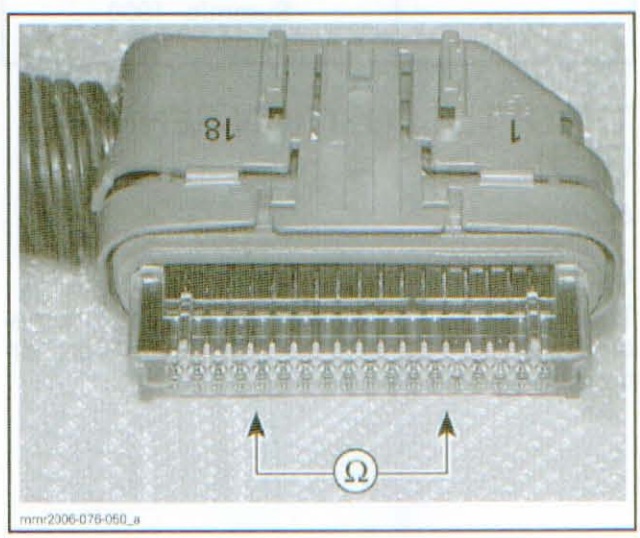

www.midwestmanuals.com

NOTE: The resistance value should change smoothly and proportionally to the throttle movement. Otherwise, replace TPS.

6. If resistance values are good, perform wear test and voltage test.
7. If resistance test fails, perform the following continuity test.

TPS Wiring Continuity Test

1. Disconnect TPS connector.

NOTE: To disconnect TPS connector, firmly press locking tab on top outer side of connector to release it.



1. Firmly squeeze here

2. Disconnect ECM connector and check continuity of wires between TPS connector and ECM connector.

TPS CONNECTOR	ECM CONNECTOR	RESULT
Pin 1	DA-22	Close to 0 Ω
Pin 2	DA-4	
Pin 3	DA-1	

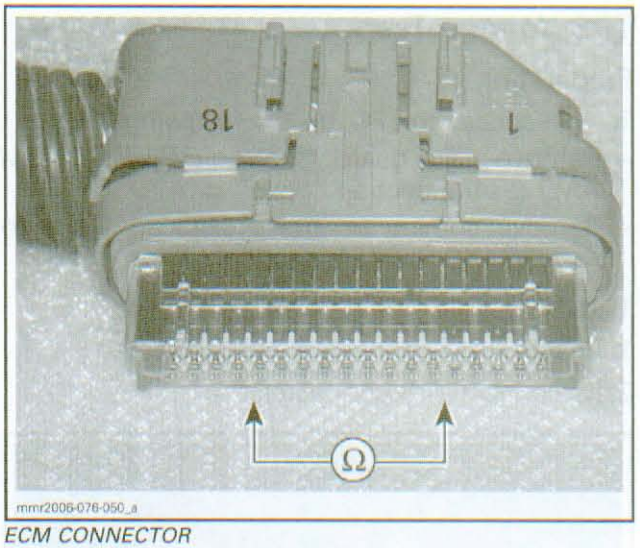

ECM CONNECTOR

3. If test fails, repair or replace wiring harness.
4. If test succeeds, check for short-circuit of ECM wiring to ground as follows.

ECM CONNECTOR		RESULT
DA-22	With chassis ground	Open circuit (OL)
DA-4		
DA-1		

5. If test fails, repair or replace wiring harness.
6. If test succeeds, perform wear test and voltage test.

TPS Wear Test

1. While engine is not running, activate throttle and pay attention for smooth operation without physical stops of the cable.
2. Use B.U.D.S. software.
3. Use the **Throttle Opening** display under **Monitoring**.
4. Slowly and regularly depress the throttle. Observe the needle movement. It must change gradually and regularly as you move the throttle. If the needle "sticks", bounces, suddenly drops or if any discrepancy between the throttle movement and the needle movement is noticed, it indicates a worn TPS that needs to be replaced.

www.midwestmanuals.com

TPS Voltage Test

Preparation

To gain access to TPS, do the following:

- Remove pulley guard. Refer to *DRIVE SYSTEM AND BRAKE* section.
- Remove primary air intake silencer. Refer to *AIR INTAKE SYSTEM* section.

Test

1. Ensure ECM connectors are connected.
2. Disconnect TPS connector.

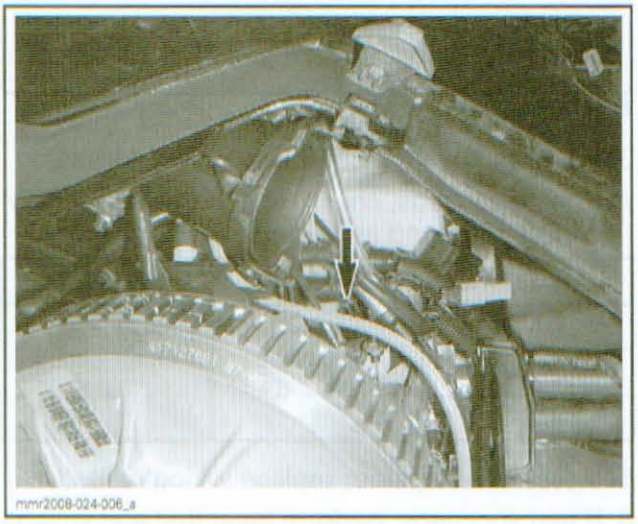

3. Check the voltage readings from harness connector as follows.
4. Connect the SUPPLY HARNESS (P/N 529 035 869) to the 6-pin diagnostic connector of vehicle. Connect the SUPPLY CABLE (P/N 529 035 997) to supply harness. Connect clips to vehicle battery. Ensure to match RED wires together and BLACK wires together.

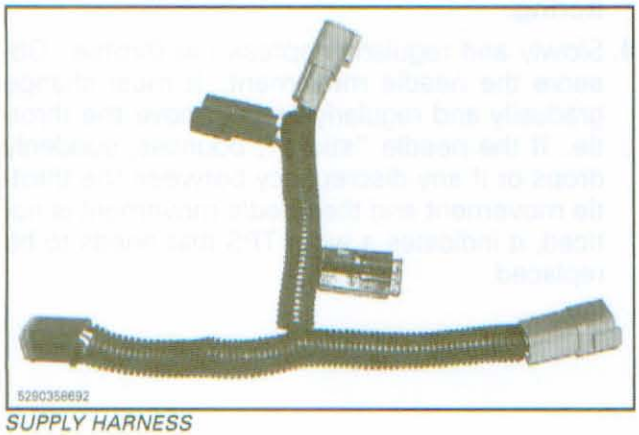

SUPPLY HARNESS



SUPPLY CABLE

NOTE: On manual start models, use an external 12 V battery.

TPS CONNECTOR	VOLTAGE
Pin 1 with pin 3	5.0 Vdc

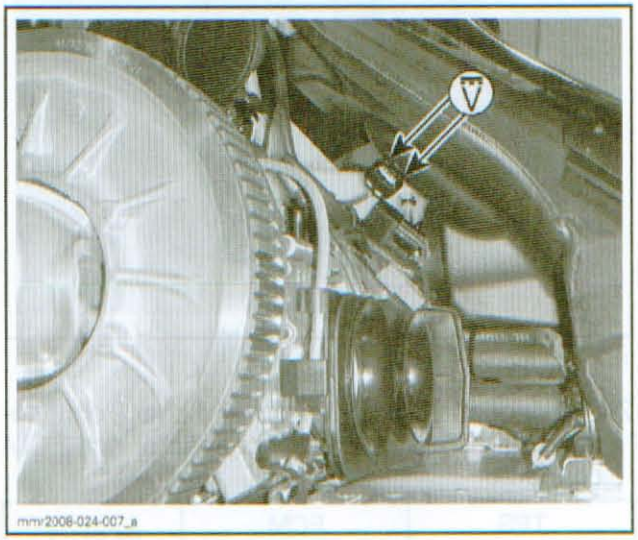

5. If voltage is not as per specification and all other resistance test were done, try a new ECM.

TPS Replacement

1. Remove pulley guard. Refer to *DRIVE SYSTEM AND BRAKE* section.
2. Remove primary air intake silencer. Refer to *AIR INTAKE SYSTEM* section.
3. Remove adapter plate from carburetors.

www.midwestmanuals.com

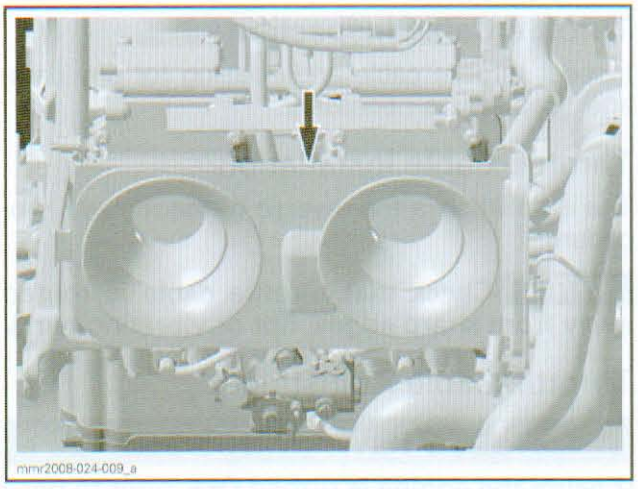

4. Loosen carburetor clamps.
5. Install a SMALL HOSE PINCHER (P/N 295 000 076) on each coolant hoses connected to carburetors.

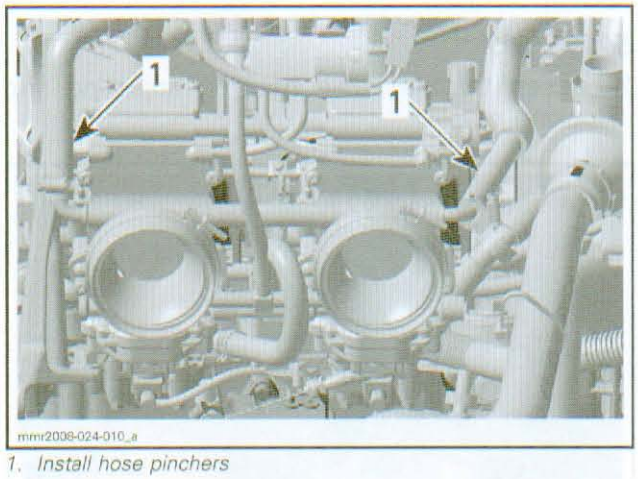

1. Install hose pinchers

6. Disconnect coolant hoses from carburetors.

NOTE: Keep throttle cable installed to avoid further adjustment.

7. Properly rotate and slightly pull out carburetors to gain access to TPS.
8. Loosen two screws retaining the TPS.
9. Remove TPS.

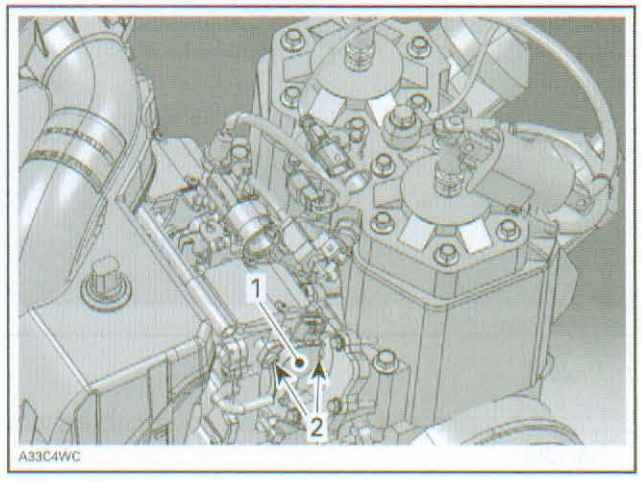

CARBURETOR
1. Throttle position sensor (TPS)
2. Screws

10. Install the new TPS.
11. Apply LOCTITE 243 (BLUE) (P/N 293 800 060) on the TPS retaining screws, then torque to 3 N•m (27 lbf•**in**).
12. Reinstall remaining removed parts.
13. Proceed with the **Closed Throttle Reset**.

THROTTLE CABLE

Throttle Cable Removal

1. Unscrew engine supports from frame and lift the engine to be able to disconnect oil pump cable from oil pump. Refer to *ENGINE REMOVAL AND INSTALLATION* section.
2. Remove applicable parts to ensure access to oil pump. Refer to *OIL INJECTION PUMP REMOVAL* section for procedures.

NOTE: Before removing the cable from vehicle, note its routing for installation.

3. Remove steering cover.
4. Using long nose pliers to hold the cable, push the end of cable out of its location.
5. Remove the retaining circlip, keep circlip for re-use.

www.midwestmanuals.com



TYPICAL
1. Circlip

6. Unhook cable sheath then remove cable from handle.
7. Disconnect cable and cable end from carburetors.

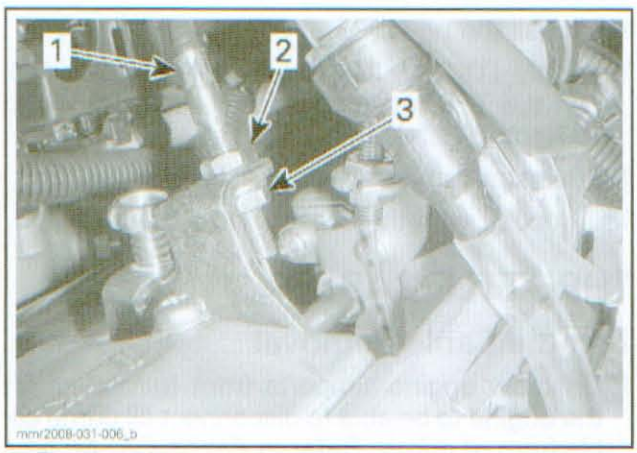

1. Throttle cable
2. Adjusting nut
3. Locking nut

8. Disconnect cable from oil pump then remove cable.

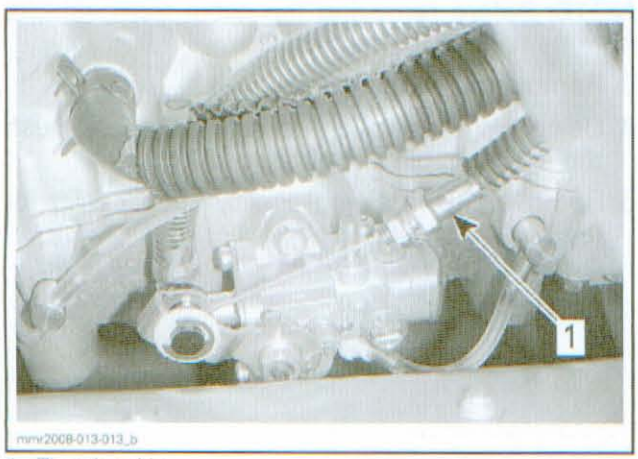

1. Throttle cable

Throttle Cable Inspection

Inspect throttle cable and housing for any damage. Replace as necessary.

Throttle Cable Installation

The installation is the reverse of the removal procedure.

NOTICE Check that throttle cable is routed away from sharp edges, hot or vibrating parts.

Throttle Cable Adjustment

⚠ WARNING

Ensure the engine is turned OFF, prior to performing the throttle cable adjustment.

Engine must be set in its position, carburetors installed on engine and throttle cable properly routed.

500SS/600

1. Loosen throttle cable housing adjusting and locking nuts.

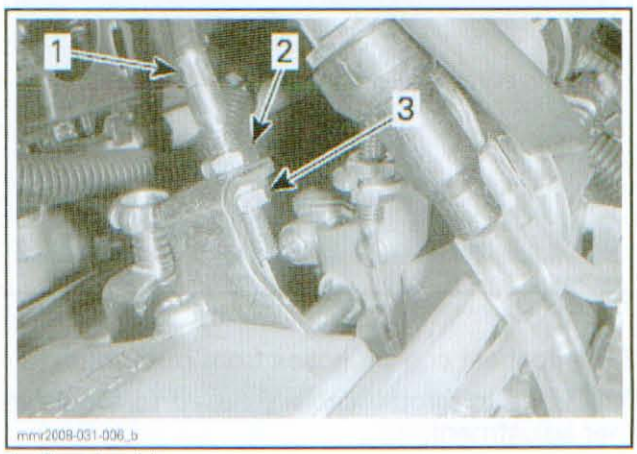

1. Throttle cable
2. Adjusting nut
3. Locking nut

2. While holding throttle lever in wide open throttle position, use your finger to validate flat side lower edge position inside venturi bore. A small play should be felt. If not, adjust throttle cable accordingly.
3. Also ensure that, when throttle is released to idle position, the idle adjusting screw end touches its stopper. No tension should be applied to throttle cable.
4. Adjust oil pump cable, refer to *LUBRICATION SYSTEM* section.

www.midwestmanuals.com

NOTICE Oil pump cable must be readjusted whenever throttle cable adjustment or idle speed are changed, otherwise serious engine damage may occur.

800R

1. Loosen throttle cable housing adjusting and locking nuts.

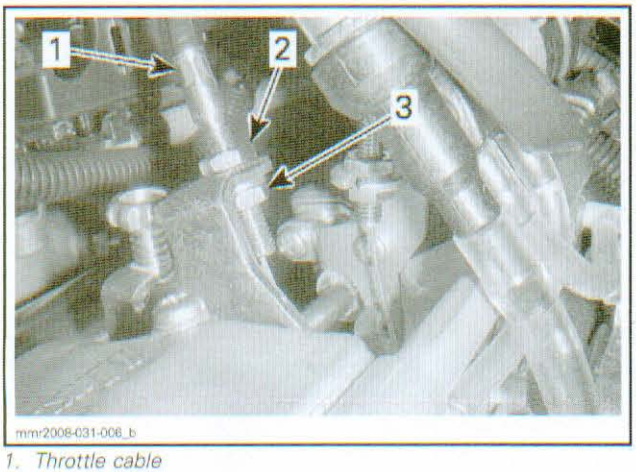

1. Throttle cable
2. Adjusting nut
3. Locking nut

2. Perform the wide open throttle position verification as follows.
   2.1 Use B.U.D.S. software.
   2.2 In **Monitoring** tab, check if throttle opening is within 95 and 100% when throttle lever is fully depressed.



MONITORING TAB

   2.3 Adjust throttle cable as required to be within this value.
3. Validate the idle position as follows.
4. Ensure that some free-play remains in the throttle cable at idle position.
5. Tighten idle screw until the specified % appears under **Throttle opening** in **Setting** tab of B.U.D.S.

MODEL	THROTTLE OPENING IN B.U.D.S.
MX Z	4%
SUMMIT	5%

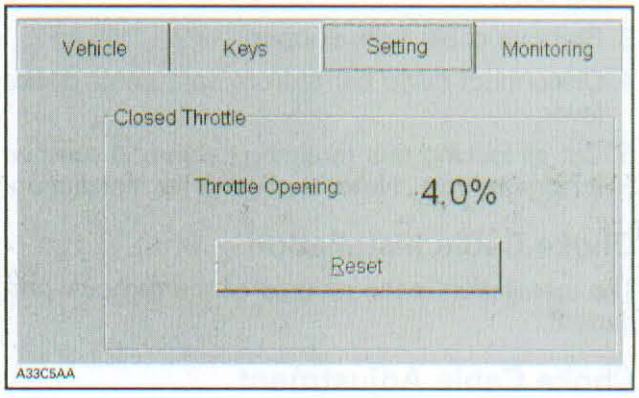

TYPICAL — SETTING TAB

6. Adjust oil pump cable, refer to *LUBRICATION SYSTEM* section.

NOTICE Oil pump cable must be readjusted whenever throttle cable adjustment or idle speed are changed, otherwise serious engine damage may occur.

Throttle Cable Lubrication

Lubricate exposed portion of cable with DIELECTRIC GREASE (P/N 293 550 004) when throttle handle is at full throttle.

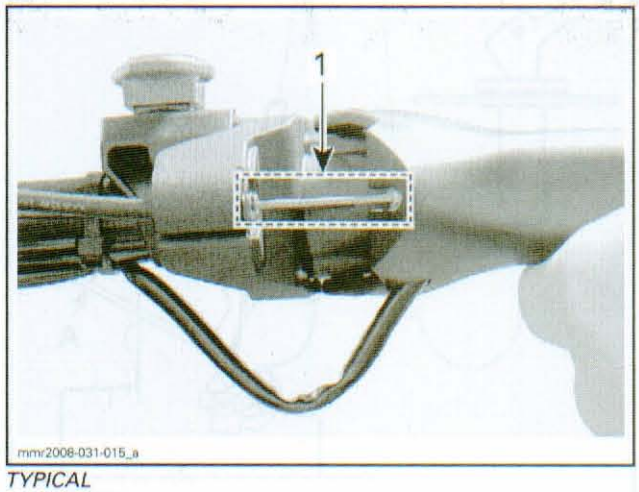

TYPICAL
1. Lubricate

www.midwestmanuals.com

CHOKE CABLE

Choke Cable Removal

NOTE: Before removing choke cable, note its routing for installation.

1. Remove choke cable nut and pull cable underneath console.
2. Loosen choke cable housing adjusting and locking nuts.
3. Remove cable from support.
4. Disconnect cable barrel from carburetor choke lever.
5. Cut all locking ties retaining cable and remove it from vehicle. Note its routing for installation.

Choke Cable Installation

The installation is the reverse of the removal procedure.

Choke Cable Adjustment

Adjust choke cable as per following procedure:

1. Loosen choke cable housing adjusting and locking nuts.
2. While choke lever is fully open, pull choke cable until cam lever reaches the stopper. Tighten cable housing adjusting and locking nuts in this position.
3. As a confirmation, the gap between the stopper and the cam lever should be within 0 mm and 0.5 mm (0 in and .02 in).

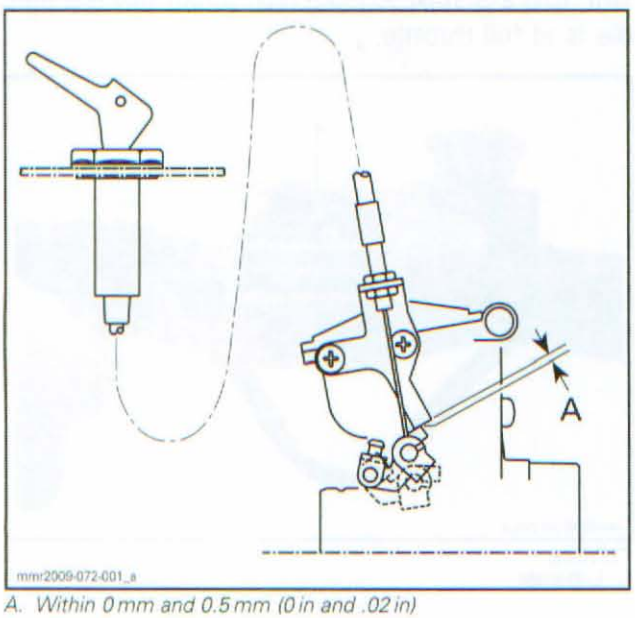

A. Within 0 mm and 0.5 mm (0 in and .02 in)

www.midwestmanuals.com

DPM SYSTEM (800R)

SERVICE TOOLS

Description	Part Number	Page
FLUKE 115 DIGITAL MULTIMETER	529 035 868	268
VACUUM/PRESSURE PUMP	529 021 800	271

www.midwestmanuals.com

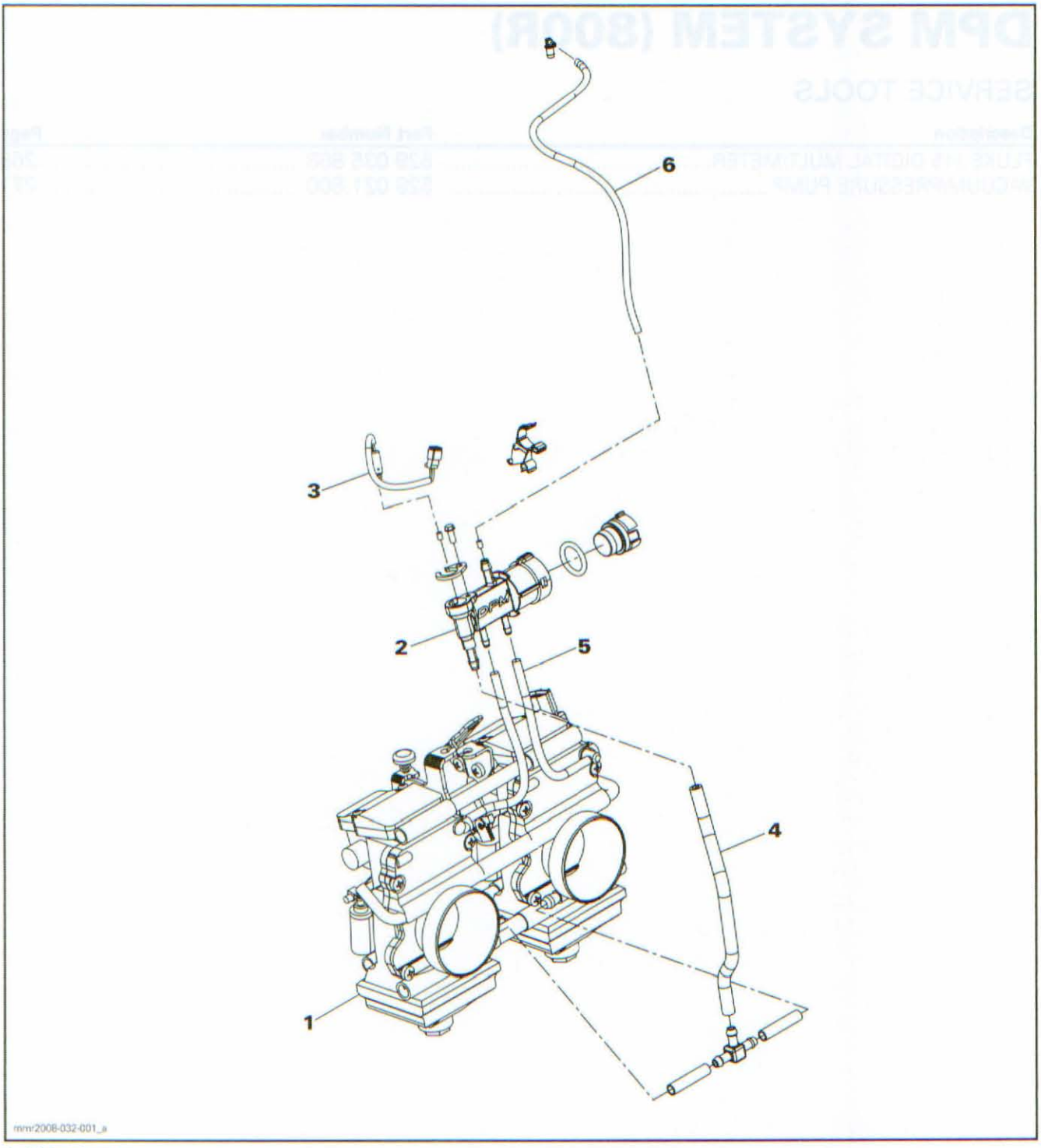

1. *TM carburetor*
2. *DPM manifold*
3. *DPM solenoid*
4. *Negative pressure tubes connected to venturi*
5. *Float bowl tubes*
6. *Vent tube connected to air intake silencer*

www.midwestmanuals.com

GENERAL

SYSTEM DESCRIPTION

The DPM receives negative pressure created in the carburetor venturi. A solenoid (controlled by ECM) opens the passage, when activated, to decrease the pressure in the carburetor bowls which in turn, lean the fuel mixture.

NOTE: For engine starting and warm-up, the required richer mixture is supplied by a conventional choke (enricher type).

The carburetors are calibrated with the richest jetting required to fulfil the worse operating conditions.

Using predefined maps, the ECM is constantly activating (duty cycle) the DPM solenoid to optimize the air/fuel mixture.

The ECM receives the signals from different sensors which indicate engine operating conditions at millisecond intervals.

The engine RPM (through the trigger coils) and TPS are the primary sensors used to control the DPM. Other sensors (air pressure, air and coolant temperature) are used as secondary inputs.

As air temperature and altitude change, the ECM uses its 3D mapping to maintain the air/fuel mixture at an optimum.

The ECM begins to lean fuel mixture when engine RPM is above approximately 3500 RPM.

PROCEDURES

NOTE: It is a good practice to check for fault codes using B.U.D.S. software as a first troubleshooting step. Refer to *MONITORING SYSTEM AND FAULT CODES* section.

AIR TEMPERATURE SENSOR (ATS)

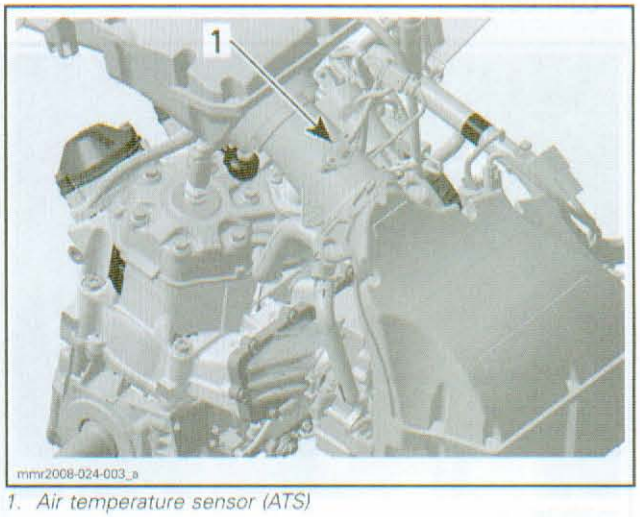

1. Air temperature sensor (ATS)

ATS Sensor Dynamic Test

1. Use B.U.D.S. software.
2. Look **Intake Air** in **Monitoring** tab of B.U.D.S. It should show the ambient temperature. Otherwise, perform the ATS sensor resistance test.

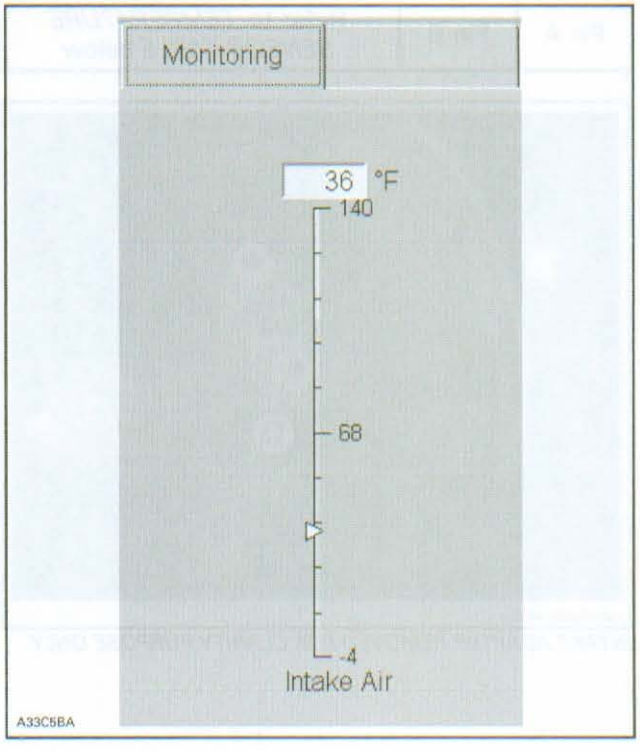

ATS Sensor Resistance Test

1. Remove pulley guard. Refer to *DRIVE SYSTEM AND BRAKE* section.

www.midwestmanuals.com

2. Remove primary air intake silencer. Refer to *AIR INTAKE SYSTEM* section.
3. Rotate intake adapter to disconnect ATS sensor connector.

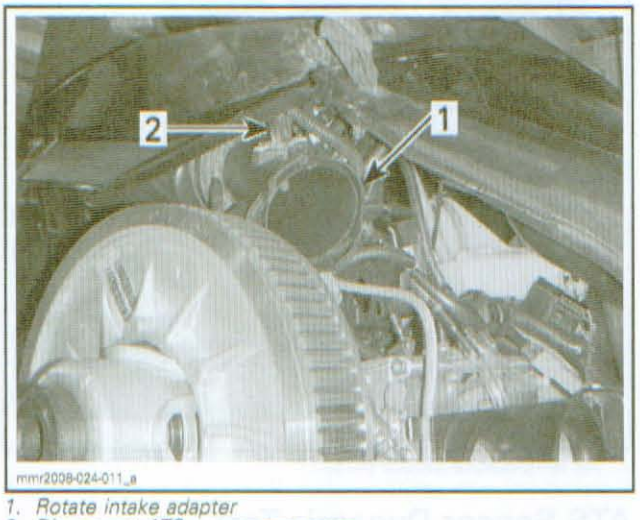

mmr2008-024-011_a

1. Rotate intake adapter
2. Disconnect ATS sensor connector

4. Using the FLUKE 115 DIGITAL MULTIMETER (P/N 529 035 868), measure ATS sensor resistance.

ATS SENSOR		MEASUREMENT
Pin A	Pin B	Refer to *TEMPERATURE SENSOR TABLE* below

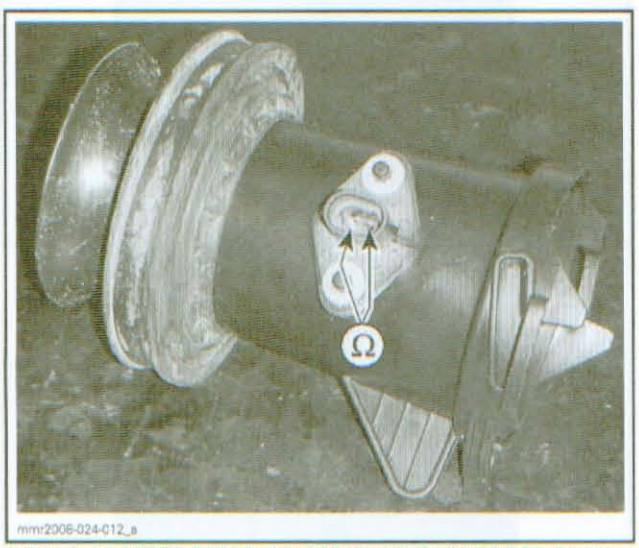

mmr2008-024-012_a

INTAKE ADAPTER REMOVED FOR CLARITY PURPOSE ONLY

ATS SENSOR TEMPERATURE TABLE		MEASUREMENT
°C	°F	RESISTANCE (Ω)
- 30	- 22	28000
- 20	- 4	14500
0	32	5500
20	68	2500
40	104	1200
60	140	600
80	176	320
100	212	180
130	266	90

If out of specification, replace sensor.

If resistance tests good, **Reconnect** the ATS sensor and test the circuit continuity.

ATS Sensor Circuit Continuity Test (with Sensor)

Disconnect the ECM connector.

Measure resistance at ECM connector as follows.

ECM CONNECTOR		MEASUREMENT
DA-1	DA-19	Refer to *TEMPERATURE SENSOR TABLE* above

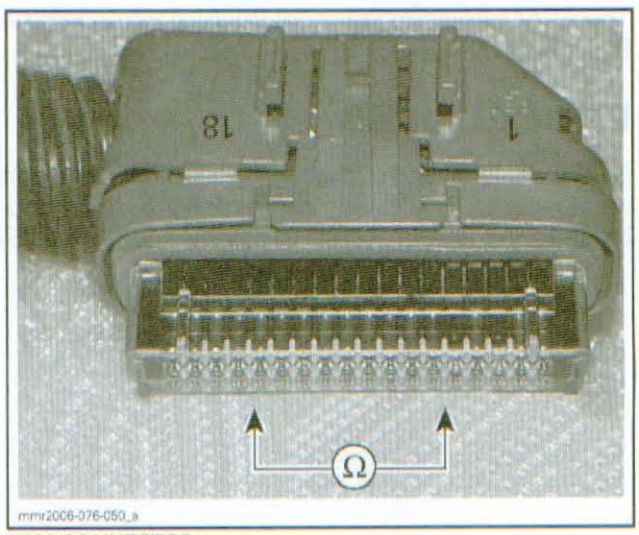

mmr2006-076-050_a

ECM CONNECTOR

If resistance is out of specification (sensor resistance is good), repair the connectors or replace the wiring harness between ECM connector and the ATS sensor.

Reinstall removed parts. Ensure intake adapter boot is properly installed on the adapter. See below in *ATS SENSOR REPLACEMENT*.

www.midwestmanuals.com

ATS Sensor Replacement

1. See procedures above to reach sensor.
2. Loosen boot clamp.

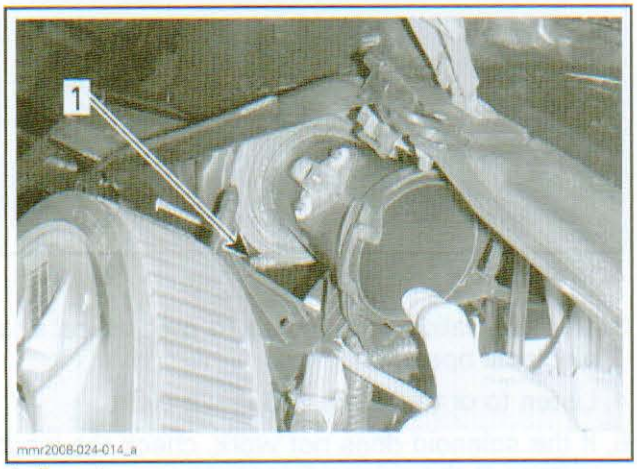

1. Boot clamp

3. Unplug ATS sensor connector.
4. Pull out intake adapter.
5. Remove and discard sensor push nuts.

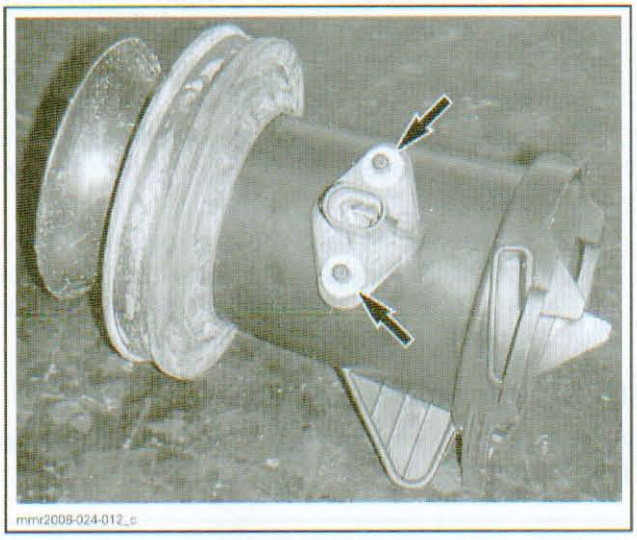

6. Pull out sensor.
7. Use **NEW** push nuts and secure the new sensor to adapter.
8. Ensure adapter boot is properly installed as shown.

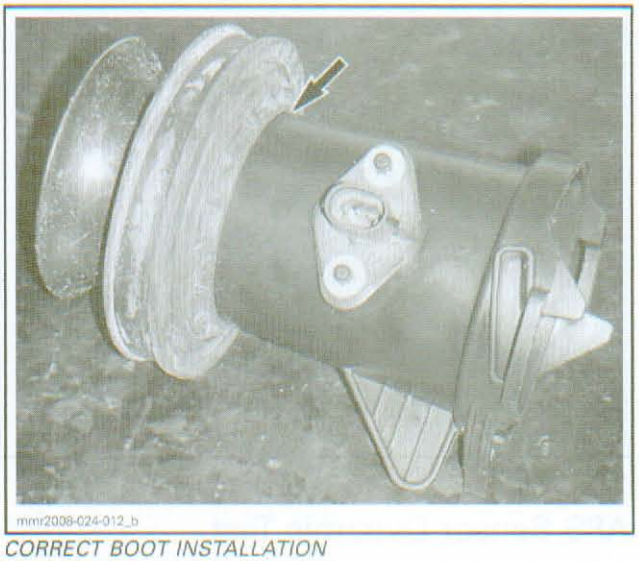

CORRECT BOOT INSTALLATION

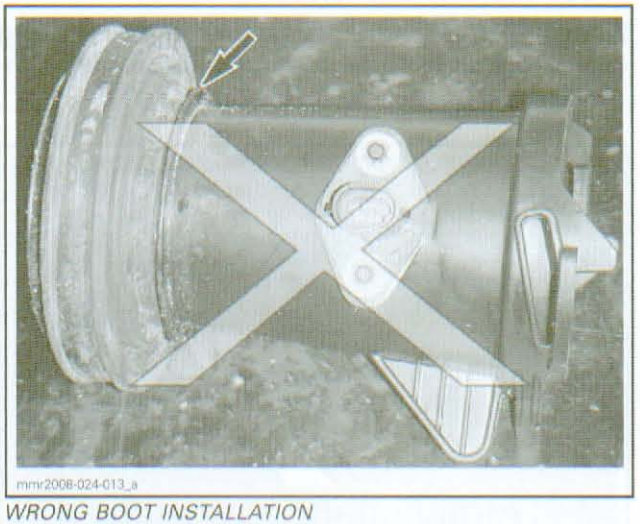

WRONG BOOT INSTALLATION

9. Install intake adapter on secondary air intake silencer.
10. Reconnect ATS sensor.
11. Reinstall all other removed parts.

AIR PRESSURE SENSOR (APS)

APS sensor is integrated in ECM.

www.midwestmanuals.com

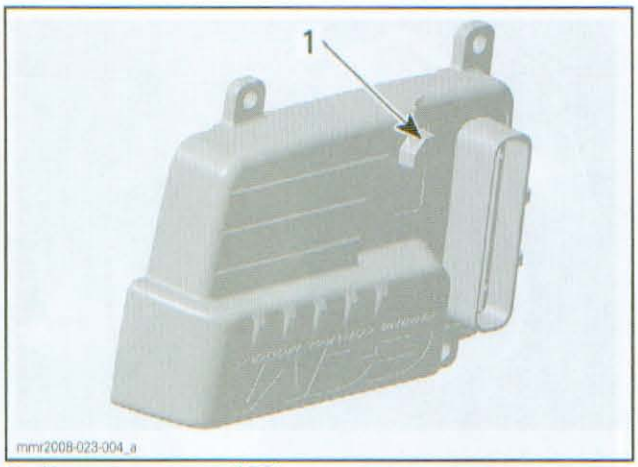

1. Air pressure sensor (APS)

APS Sensor Dynamic Test

1. Use B.U.D.S. software.
2. Look **Atmospheric Pressure** in **Monitoring** tab. It should show the actual pressure. Otherwise, perform the following.

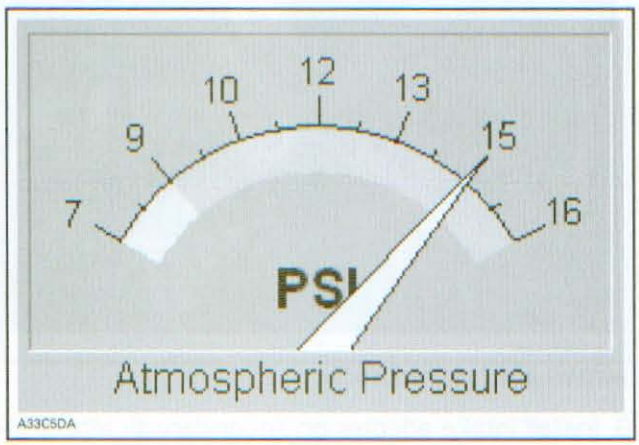

3. Ensure pressure orifice is free of snow, ice and dirt. Temporarily remove the orifice filter and clean the area.
4. Check for fault codes in B.U.D.S.
5. If sensor does not work replace ECM.

DPM SOLENOID

DPM Solenoid Test with B.U.D.S.

1. Connect B.U.D.S. software. Refer to *COMMUNICATION TOOLS AND B.U.D.S. SOFTWARE* section for proper connection instructions.
2. Energize **Leaning valve** (DPM solenoid) from **Activation** tab.

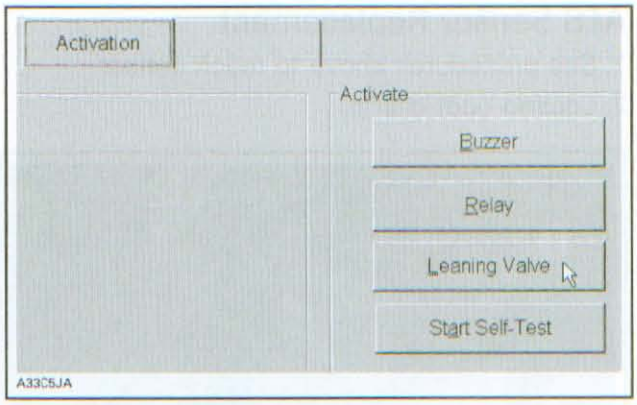

ACTIVATION TAB

3. This will validate the solenoid mechanical and electrical operation.
4. Listen to or touch relay to feel it clicks.
5. If the solenoid does not work, check the input voltage at the solenoid connector.

DPM Solenoid Input Voltage Test

1. Disconnect the connector from the solenoid.
2. Measure voltage between pin 2 of DPM solenoid on harness side, and battery ground (engine ground on manual start models).
   - 2.1 If 12 V is read, disconnect connector from the ECM and check continuity of circuit between pin DA-29 and pin 1. If wire/connector tests good, try a new ECM.
   - 2.2 If it does not read 12 V, check the corresponding fuse(s), relay and continuity of circuit DP-2. If continuity is faulty, repair or replace wire and connector.

DPM Solenoid Replacement

At reassembly, ensure that solenoid seals are in place.

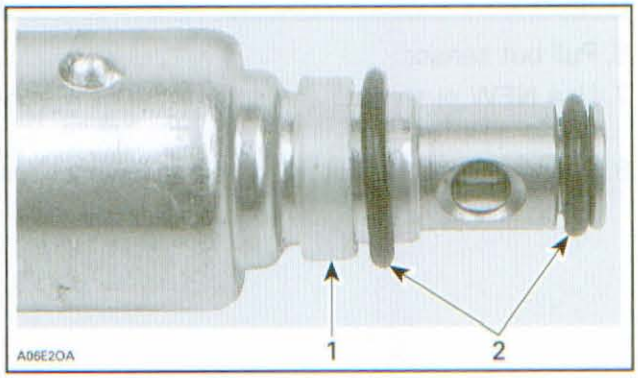

1. Plastic seal
2. O-rings

www.midwestmanuals.com

DPM MANIFOLD

DPM Manifold Visual Inspection

With DPM manifold removed from vehicle and all hoses disconnected from DPM manifold, inspect for any broken fittings or missing dust caps. If any part is broken, replace DPM manifold.

Ensure jets are positioned with the taper as shown.

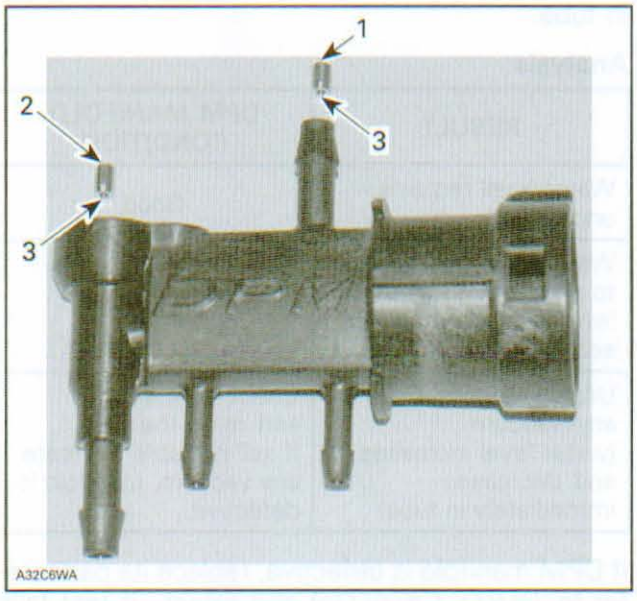

1. *Vent jet*
2. *Lean jet*
3. *Taper end here*

Pay also attention not to mix jets. Refer to the following table for the proper inner diameter size. Refer to the illustration above for the jet location.

MODEL	INSIDE DIAMETER MM (IN)	
	VENT JET	LEAN JET
800R	1.2 mm (.047 in)	2.0 mm (.079 in)

Ensure DPM cap O-ring is in good condition. To install cap, firmly push until tabs click and lock on both sides in DPM.

Leak test the DPM manifold.

DPM Manifold Leak Test

Required Items

The following items will be required:

- Water column with at least 350 mm (13-3/4 in) in height
- 4.8 mm (3/16 in) T-fitting
- 6 mm (15/64 in) T-fitting
- 3.5 mm (9/64 in) ID x 100 mm (4 in) hose
- 6 mm (15/64 in) ID x 300 mm (12 in) hose
- VACUUM/PRESSURE PUMP (P/N 529 021 800).



529 021 800

DPM Manifold Preparation

Connect hoses as shown.

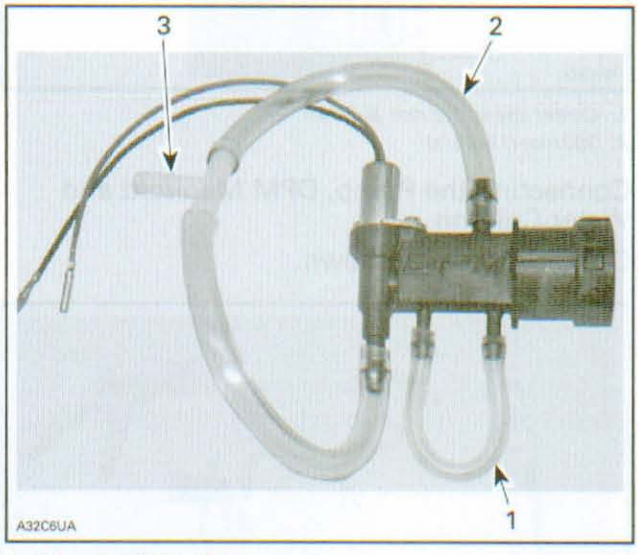

1. *3.5 mm (9/64 in) ID hose*
2. *6 mm (15/64 in) ID hose*
3. *6 mm (15/64 in) T-fitting*

Water Column Preparation

Mount water column vertically and secure it to a wall or workbench.

Fill water column to center line (at least 175 mm (6-7/8 in)) in height. Refer to following photo.

www.midwestmanuals.com

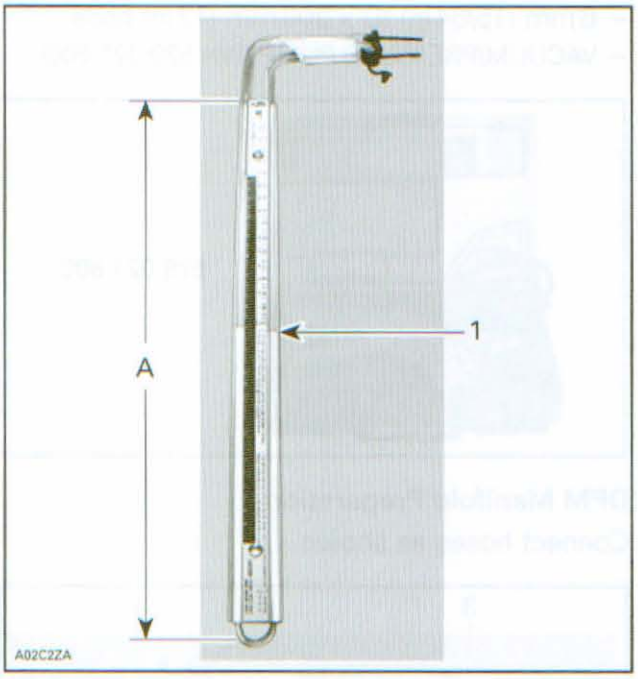

1. Center line at 175 mm (6-7/8 in)
A. 350 mm (13-3/4 in)

Connecting the Pump, DPM Manifold and Water Column

Connect hoses as shown.

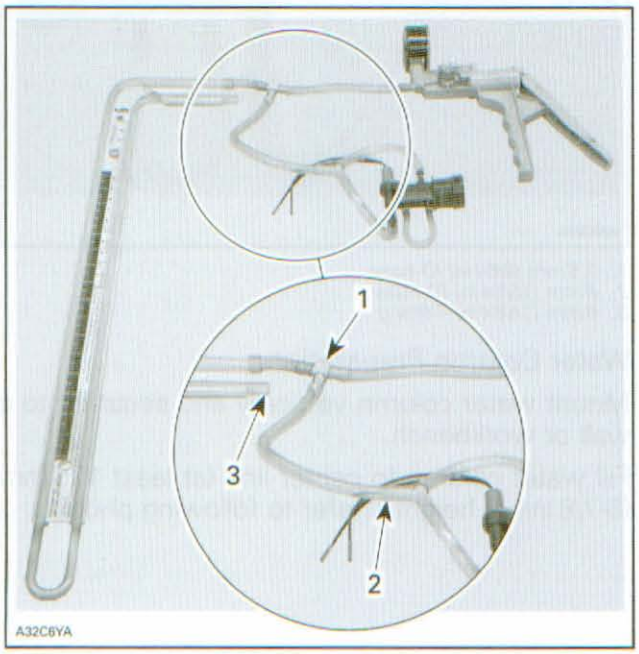

1. 4.8 mm (3/16 in) T-fitting
2. T-fitting
3. Vented to atmosphere

Collect hose into one of the water column tubes, leave the other tube at atmospheric pressure.

Testing

Set pump to «vacuum».

NOTICE Never use pump directly on DPM to make a pressure test. The vacuum produced by the pump is too high and would damage DPM components. Use the water column as explained above.

Apply negative pressure (vacuum) until the extremities of the water in the tube attain a difference of 350 mm (13-3/4 in).

Stop pumping and allow water levels to stabilize in tube.

Analysis

RESULT	DPM MANIFOLD CONDITION
Water level remains unchanged	Good
Water level drops slowly to return to an even level in **more than** 10 seconds	Defective
Unable to create any vacuum (water level increases and decreases immediately in tube)	Check your set-up and re-do the test. If still not able to create any vacuum, manifold is defective

If DPM manifold is defective, replace its parts (refer to *PARTS CATALOG*) and retest. If test fails again, replace DPM manifold.

www.midwestmanuals.com

E-TEC DIRECT FUEL INJECTION

SERVICE TOOLS

Description	Part Number	Page
FLUKE 115 MULTIMETER	529 035 868	284, 286, 307–308, 311, 313
HOSE PINCHERS	295 000 076	305
INJECTOR ADAPTER	529 036 136	288
INJECTOR RETAINER PLATES	529 036 137	282
PLIERS OETIKER 1099	295 000 070	278
T-HARNESS	529 035 869	296

SERVICE TOOLS – OTHER SUPPLIER

Description	Part Number	Page
SNAP-ON HAMMER	CJ125-6	288
SNAP-ON SCREW	CJ93-1	288

SERVICE PRODUCTS

Description	Part Number	Page
ANTI-SEIZE LUBRICANT	293 800 070	316
DIELECTRIC GREASE	293 550 004	291
PULLEY FLANGE CLEANER	413 711 809	305

GENERAL

⚠ WARNING

Always disconnect the magneto connector prior to:
- Disconnecting any fuel hose.
- Removing a fuel injector.
- Removing a spark plug cable or spark plug.

Otherwise, fuel vapors may ignite in presence of a spark creating a fire hazard.

⚠ WARNING

Fuel is flammable and explosive under certain conditions. Always proceed with care and use appropriate safety equipment when working on pressurized fuel system. Wear safety glasses and work in a well ventilated area. Fuel lines remain under pressure at all times. When removing or installing high pressure test equipment and disconnecting fuel line connections:
- Release fuel pressure prior to removing a hose.
- Cover the fuel line connection with an absorbent shop rag.
- Slowly disconnect the fuel hose to minimize spilling.
- Do not allow fuel to spill on hot engine parts and electrical connectors.
- Wipe up any fuel spillage in the engine compartment.

www.midwestmanuals.com

⚠ WARNING

Perform a fuel pressure test each time a component from the fuel system is removed. Prior to start the engine when a fuel hose was disconnected or an injector removed:

- Ensure all fuel lines are properly connected.
- Crank engine to pressurize fuel system. Do not let engine run. If it starts, stop it right away.
- Inspect engine compartment to detect any fuel leakage or an abnormally strong fuel odor which may be an indication of a fuel leak that is not readily visible.

SYSTEM DESCRIPTION

The ECM reads the input signals from different sensors which indicate engine operating conditions at micro-second intervals.

The ECM calculates the proper air/fuel ratio and activates the output to injectors.

Signals from sensors are used by the ECM to determine the injection parameters (fuel maps required for optimum air-fuel ratio).

The crankshaft position sensor (CPS), the throttle position sensor (TPS) are the primary sensors used to control the injection. Other sensors (like temperature sensors, etc.) are used as secondary input.

Air Induction

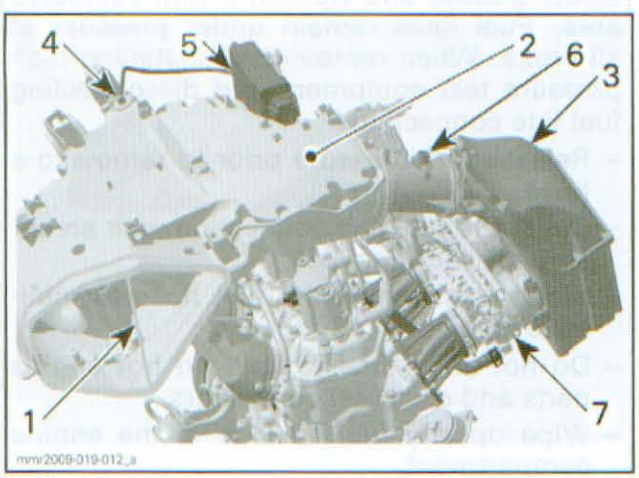

1. *Mesh filter*
2. *Secondary air intake silencer*
3. *Primary air intake silencer*
4. *Air pressure fitting and hose*
5. *Air pressure sensor in ECM*
6. *Air temperature sensor*
7. *Throttle body*

Air flows through a mesh filter in the secondary air intake silencer mounted on top of engine. The mesh filter prevents snow from being drawn into the engine.

Air pressure is measured in the secondary air intake silencer through a tube connected to the ECM.

Air then flows through the primary air intake silencer.

Air temperature is measured at the entry point of the primary air intake silencer.

Air is then drawn through a dual throttle body mounted on the engine intake side.

Throttle Body

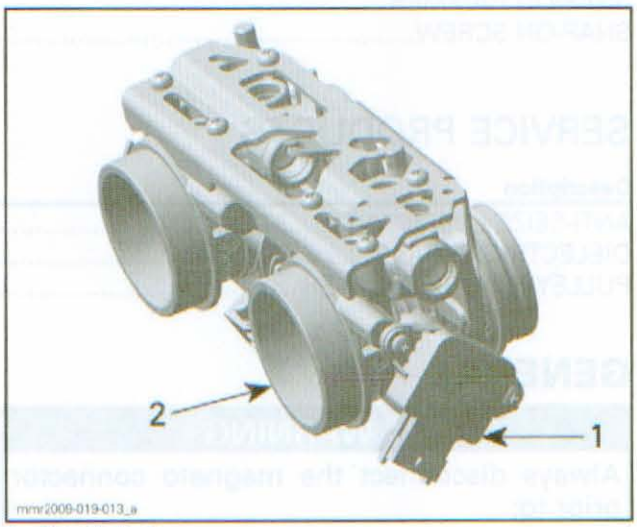

1. *Throttle body*
2. *TPS (Throttle Position Sensor)*

Dell'Orto dual 46 mm throttle body is directly mounted on intake flange of each cylinder.

The air flow is controlled by two throttle plates. Each throttle plate has a 6.8 mm (.268 in) idle hole.

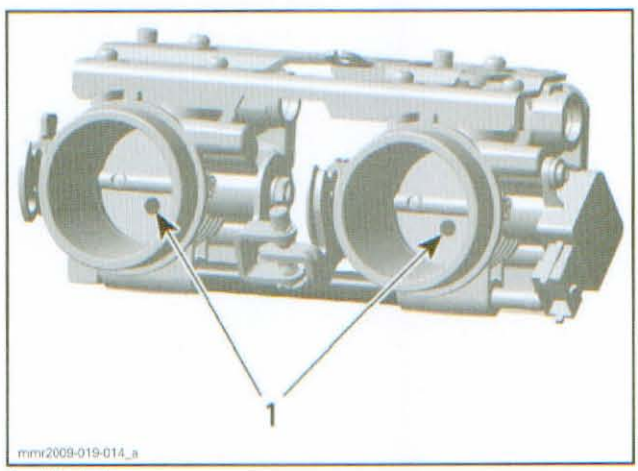

1. *Idle holes*

www.midwestmanuals.com

Since there is a constant airflow through the idle holes of the throttle plates, the idle speed is controlled by the ECM by varying the amount of fuel injected in the combustion chamber and by controlling the injection timing.

The TPS (Throttle Position Sensor) is fitted on the throttle body. The TPS sends throttle angle position to the ECM.

Engine coolant flows through throttle body to prevent potential freezing of throttle plates due to the temperature drop naturally created by the venturi.

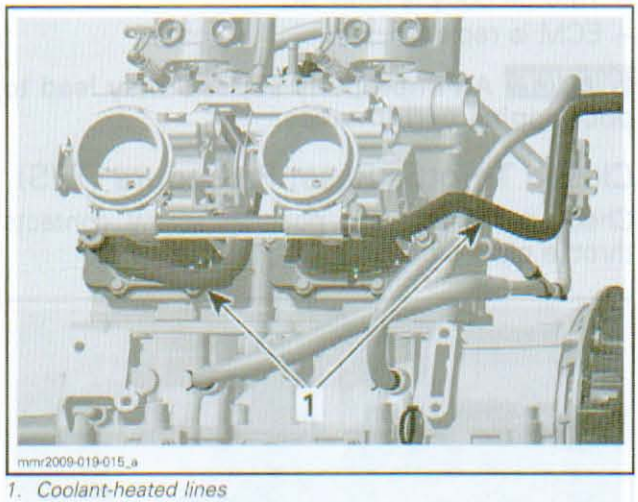

1. Coolant-heated lines

The air then continues through the reed valves into the cylinder base then into the crankcase.

Fuel Injector

The injectors work on the 55 Vdc system voltage.

One injector per cylinder is used.

The E-TEC injector is mounted directly on top of the cylinder head.

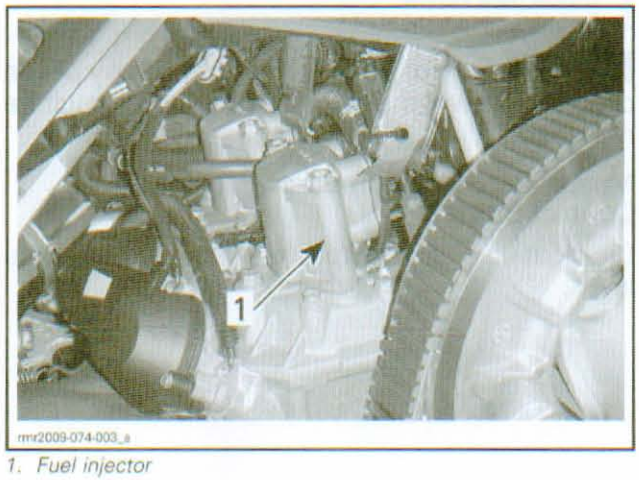

1. Fuel injector

The injector achieves a direct injection right into the combustion chamber. This keeps the piston cooler with less fuel.

A voice coil type is used to open and close the injector nozzle. This allows a quick operation of the injector at the opening stage as well as at the closing stage. This results in the ability to operate the engine at a high RPM and this lowers unburned fuel to the exhaust port.

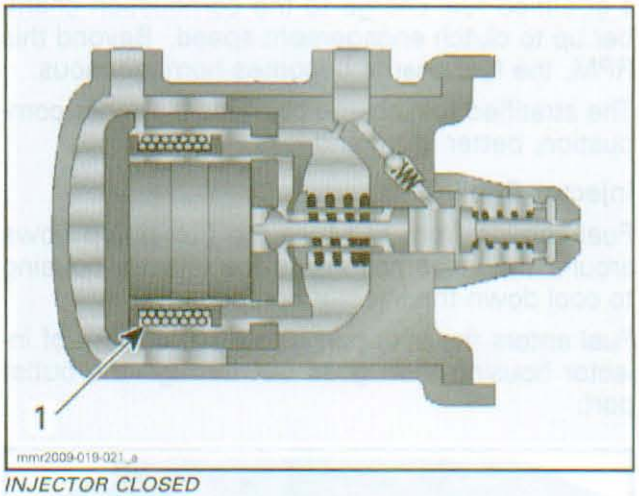

INJECTOR CLOSED
1. Voice coil

When a positive current is supplied to the coil by the ECM, the injector plunger moves towards the spring loaded injector needle. As injector plunger moves, this builds up a pressure in the injector chamber. When the pressure reaches approximately 1724 kPa (250 PSI), this overcomes the injector needle spring strength and the needle opens. Then, the fuel injection takes place while the pressure peaks at 3103 kPa (450 PSI).

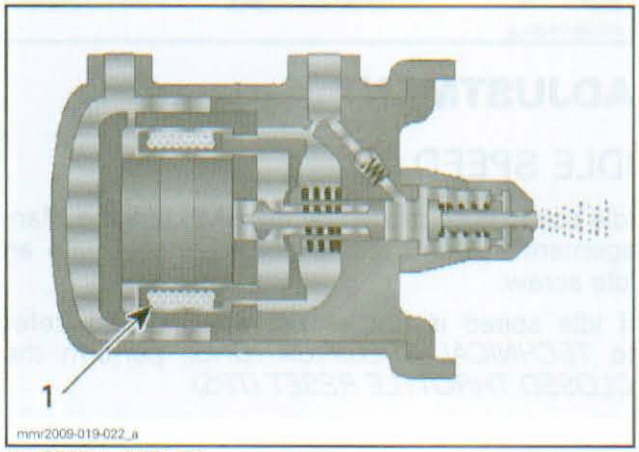

INJECTOR OPENED
1. Voice coil

Swirl channels are used in injector to better atomize the fuel charge.

www.midwestmanuals.com

The quantity of injected fuel is controlled by varying the injector plunger stroke.

To bring the injector plunger backward to its rest position, current is reversed and the return springs close the injector needle and plunger. Near the end of the return stroke, a brief positive current is applied to "brake" the injector plunger. This results in a quieter operation of the injectors.

In forward engine rotation, the injectors provide a stratified fuel charge to the combustion chamber up to clutch engagement speed. Beyond this RPM, the fuel charge becomes homogeneous.

The stratified fuel charge provides a cleaner combustion, better idling and less smoke.

Injector Cooling

Fuel coming from ECM via the fuel pump flows around the voice coil inside the injector housing to cool down the injector components.

Fuel enters the inlet port located at bottom of injector housing then goes out through the outlet port.

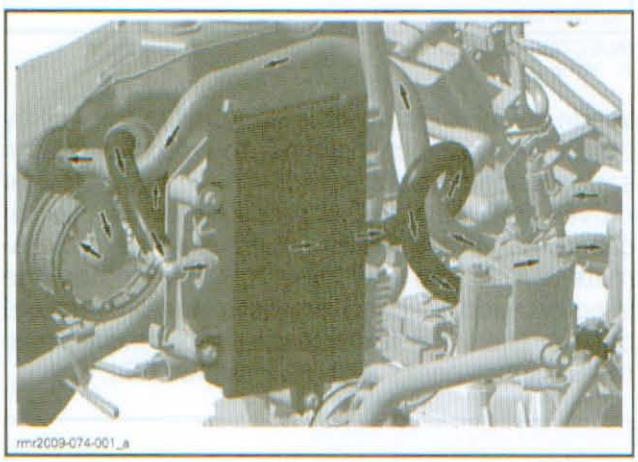

ADJUSTMENT

IDLE SPEED

Idle speed is controlled by the EMS (Engine Management System) and is not adjustable with an idle screw.

If idle speed is not as per specification (refer to *TECHNICAL SPECIFICATIONS*), perform the *CLOSED THROTTLE RESET (TPS)*.

CLOSED THROTTLE RESET (TPS)

General Information

This operation performs a reset of the TPS (throttle position sensor) values in the ECM when the throttle is closed. This reset is very important as the setting of the TPS will determine the basic parameters for all fuel mapping and several ECM calculations for idle speed control of the engine.

Closed throttle reset must be done if:
- TPS is loosen, removed or replaced.
- Throttle body is replaced.
- ECM is replaced.

NOTICE An improperly set TPS may lead to poor engine performance.

Closed Throttle Reset Procedure (TPS)

Check if master zero position screw contacts throttle plate stopper.

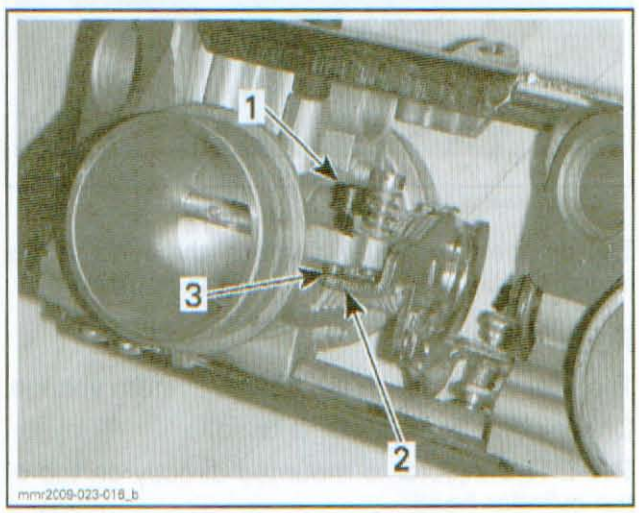

1. *Master zero position screw (capped)*
2. *Throttle plate stopper*
3. *Contact here*

NOTICE Do not alter the setting of any of the capped screw, otherwise throttle body must be replaced.

Master Zero Position Screw Does NOT Contact Stopper

Check if idle screw touches the throttle plate lever.

www.midwestmanuals.com

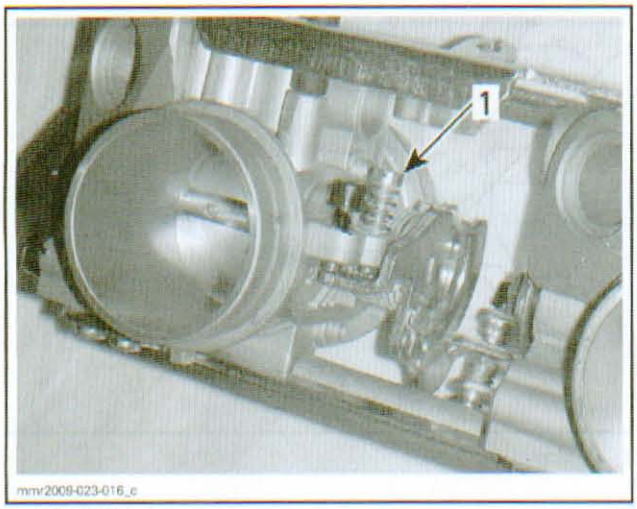

1. Idle screw

If idle screw touches the throttle plate lever, someone tampered with the idle screw. To correct the problem, exceptionally, unscrew idle screw until there is a gap.

If idle screw does not touch the throttle plate lever, adjust throttle cable. Refer to *THROTTLE CABLE* in this section.

Refer to *MASTER ZERO POSITION SCREW DOES CONTACT STOPPER* when the problem is corrected.

Master Zero Position Screw DOES Contact Stopper

Push throttle lever approximately one quarter then quickly release. Repeat 2 - 3 times to settle throttle plates.

Connect B.U.D.S. Refer to *COMMUNICATION TOOLS/B.U.D.S. SOFTWARE.*

IMPORTANT: First ensure there is no fault code related to the TPS. If so, it will not be possible to perform the **Closed Throttle** reset and the **Throttle Opening** could not be set within the specification.

Use the B.U.D.S. software and look in **Setting** tab.

The **Throttle Opening** must be within the following specification.

THROTTLE OPENING
Within – 0.2 and 0.2% (0 ± 0.2)

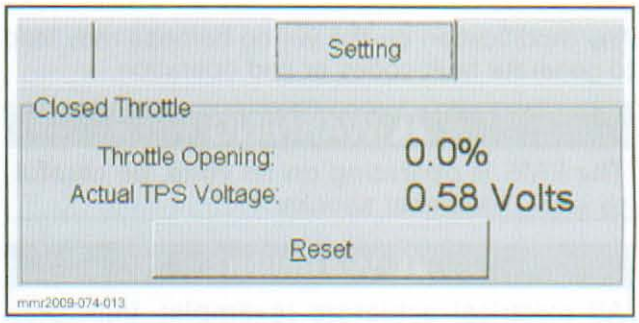

If throttle opening is within the % specification, DO NOT reset the **Closed Throttle**. It is not required.

If throttle opening is NOT within the % specification, press **Reset** button in **Closed Throttle**.

IMPORTANT: If the Actual TPS Voltage is not within 0.3 - 0.7 Volts, the **reset will not be done** and no fault code will be set. Verify the following then carry out the reset again.

- Make sure throttle cable is not stuck or too tight.
- Make sure TPS is not loose.
- Check TPS condition and its wiring/connectors.

TROUBLESHOOTING

DIAGNOSTIC TIPS

Engine problems are not necessarily related to the injection system.

It is important to ensure the mechanical integrity of the engine is present.

Spark Plugs

Improper spark plug indexing may lead to engine misfiring. Check if BRP spark plugs are installed or if spark plugs are properly indexed.

3D RAVE Valves

RAVE valves improper position may lead to engine misfiring. Check RAVE valves.

Electrical System

It is important to check that the electrical system is functioning properly:

- System voltage
- Capacitor (refer to *CHARGING SYSTEM*)
- Ground connections
- Wiring connectors.

Ensure that all electronic components are original BRP recommended components.

www.midwestmanuals.com

Any modification on the wiring harness may lead to generate fault codes or bad operation.

⚠ WARNING

The EMS is operating on 55 volts, be careful to avoid electrical shocks.

⚠ WARNING

All electrical actuators (example: injectors, fuel pump, ignition coils and electronic oil injection pump) are powered as soon as engine is cranked when engine stop switch is at the RUN position.

Electrical Connections

Pay particular attention to ensure that pins are not out of their connectors or out of shape.

Make sure that connections are very tight and they make good contact, they are corrosion-free and show no signs of moisture. Particularly check ECM ground connections.

NOTE: Do not apply dielectric grease or other lubricant on the ECM connectors.

Check if wiring harness shows any signs of scoring.

Resistance Measurement

When measuring the resistance with an ohmmeter, all values are given for a temperature of 20°C (68°F). The value of a resistor varies with the temperature. The value for common resistor or windings (such as solenoid) increases as the temperature increases. However, our temperature sensors are NTC types (Negative Temperature Coefficient) except for the EGTS, and work the opposite which means that the value decreases as the temperature increases. Use the provided tables for sensor resistive values at given temperature.

The resistive value of a temperature sensor may test good at a certain temperature but it might be defective at other temperatures.

A good test would be to put sensor in a container filled with ice and water and measure resistance. Then, heat water and read resistance at different temperatures.

PROCEDURES

FUEL HOSES AND OETIKER CLAMPS

To secure or cut Oetiker clamps on fuel lines, use PLIERS OETIKER 1099 (P/N 295 000 070).

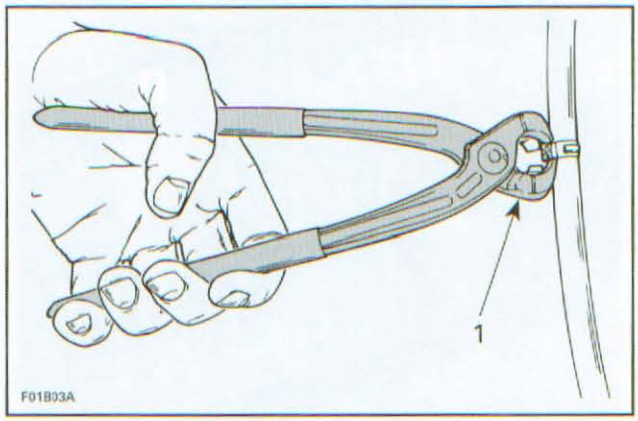

1. Cutting clamp

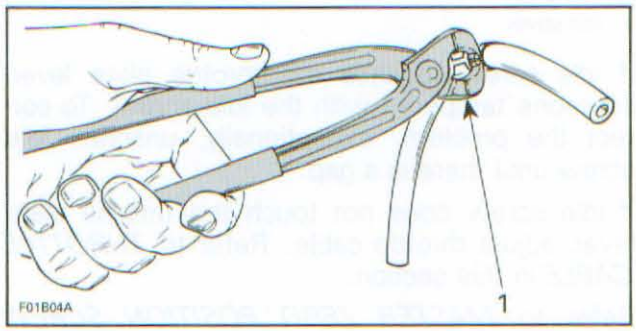

1. Securing clamp

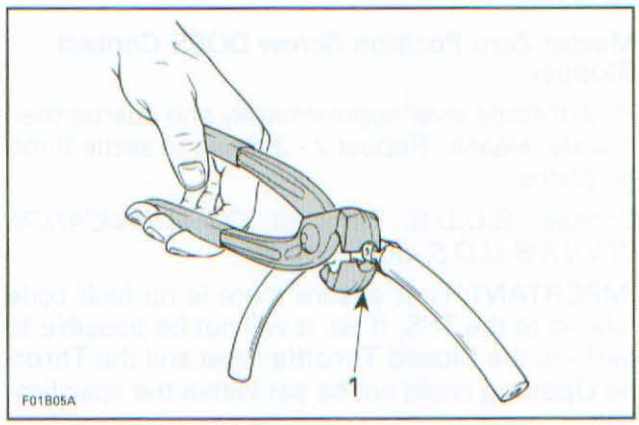

1. Securing clamp in limited access

www.midwestmanuals.com

⚠ WARNING

- Never use a hose pincher on high pressure hoses.
- Never change the routing of a fuel hose.
- Always reinstall the corrugated protective tubing on fuel hose.
- Always install new Oetiker clamps on fuel hoses.
- Secure fuel hoses using the appropriate locking tie or fastener to prevent contact with sharp edges or hot, rotating and moving parts.
- After connecting a hose or a quick connect fitting, pull on hose near the fitting to make sure it is securely locked.

Use of improper fuel lines could compromise fuel system integrity.

THROTTLE CABLE

Throttle Cable Removal

Remove handlebar cover.

Depress and hold throttle lever.

Pull out circlip using long nose pliers. Keep circlip to re-use.

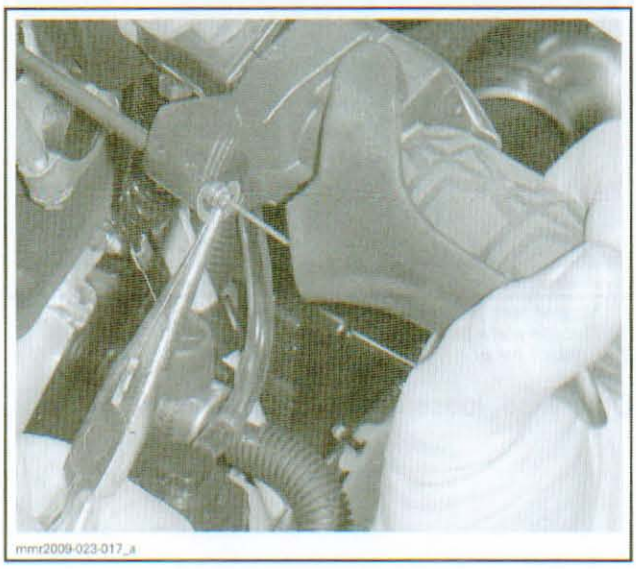

Pull throttle cable out of its housing.

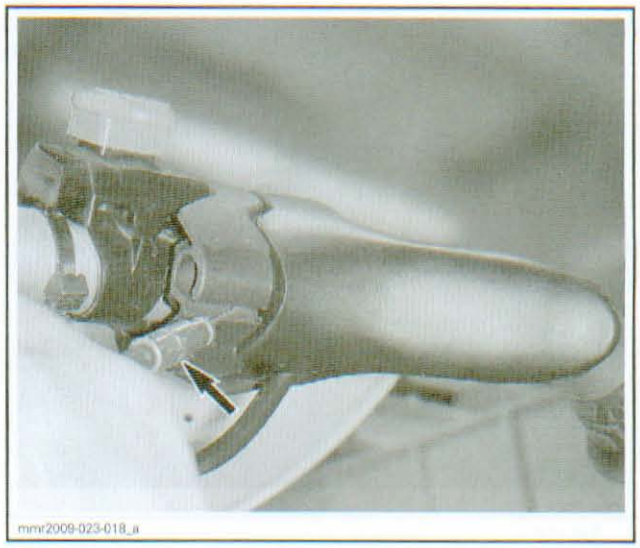

Unhook cable end barrel from throttle lever and remove cable.

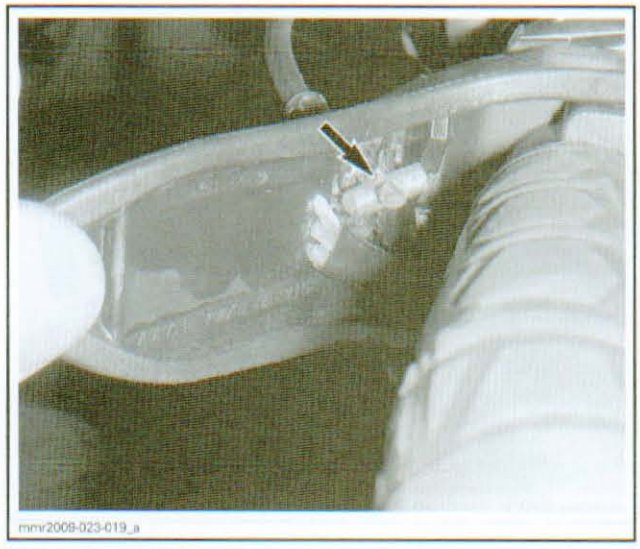

Note cable routing before removal.

Remove drive belt guard. Refer to *DRIVE BELT*.

Remove primary air intake silencer. Refer to *AIR INTAKE SYSTEM*.

At throttle body, unlock top nut.

Fully unscrew bottom nut.

www.midwestmanuals.com

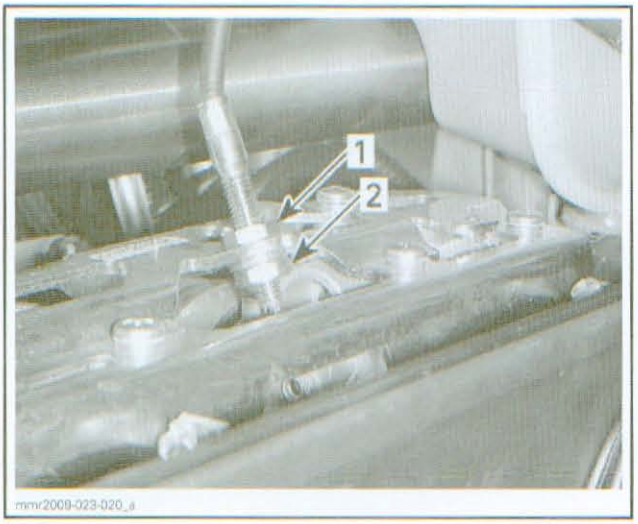

1. Top nut
2. Bottom nut

Loosen throttle body clamps.

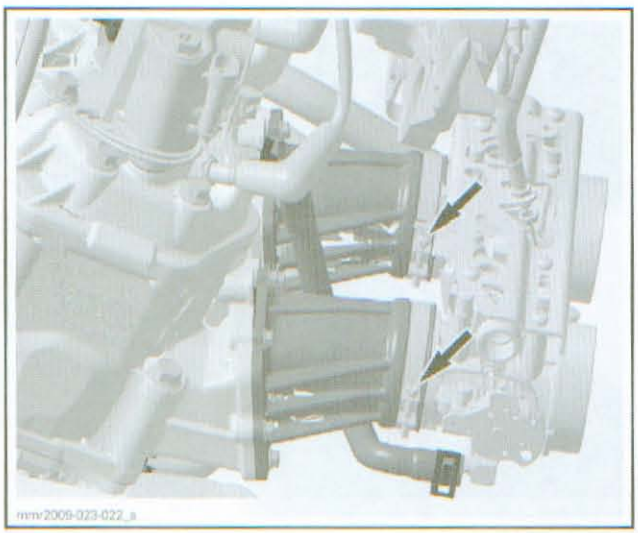

Pull out throttle body enough to unhook throttle cable end.



Remove throttle cable.

Throttle Cable Installation

Reverse removal procedure but pay attention to the following.

Route cable as noted before removal.

Ensure that cable ends are properly secured in their levers.

Proceed with throttle cable adjustment.

Throttle Cable Adjustment

NOTICE Do not alter throttle cable routing. It may cause poor startability and erratic idling.

With throttle lever released, ensure there is some free-play in throttle cable to allow a contact between master zero position screw end and throttle plate stopper.

NOTICE Do not tamper with any screw. Otherwise, it may result in throttle body replacement.

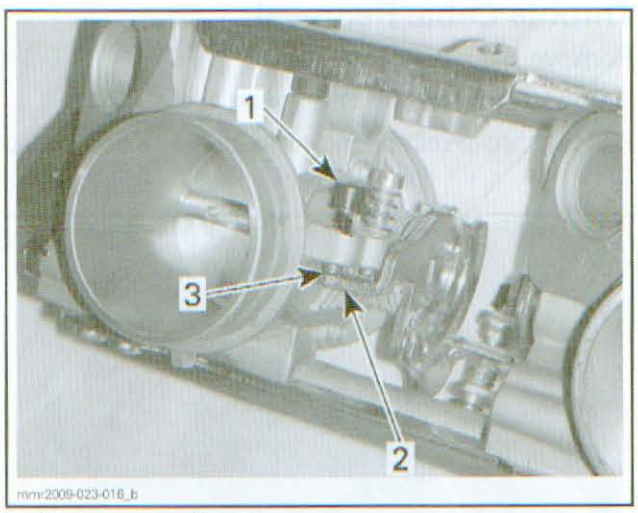

1. Master zero position screw
2. Throttle plate stopper
3. Contact here

Otherwise, loosen throttle cable nuts.

www.midwestmanuals.com

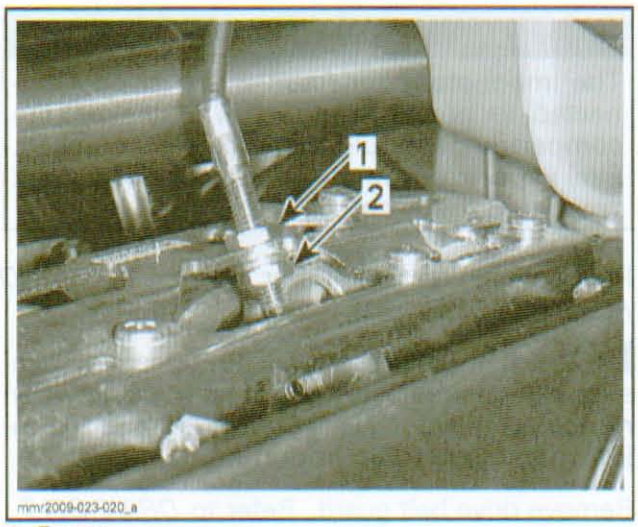

1. Top nut
2. Bottom nut

Set cable adjuster accordingly then tighten nuts.

Push throttle lever approximately one quarter then quickly release. Repeat 2 - 3 times to settle throttle plate. Recheck adjustment.

Connect B.U.D.S. Refer to *COMMUNICATION TOOLS/B.U.D.S. SOFTWARE*.

Use the B.U.D.S. software and look in **Monitoring** tab.

Fully depress throttle lever and hold.

Look at the throttle opening. Displayed value must be within the following specification.

THROTTLE OPENING (WIDE OPEN THROTTLE)
95 - 100%

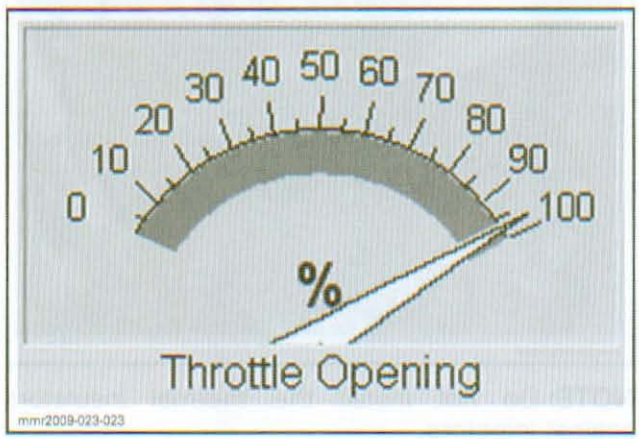

Otherwise re-adjust throttle cable.

NOTE: If value is below the minimum, tighten throttle cable. If value is above the maximum value, loosen throttle cable.

FUEL INJECTOR

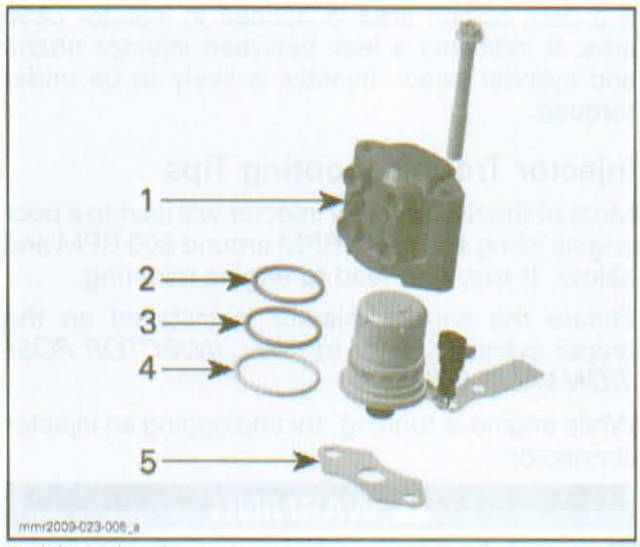

1. Injector housing
2. Top O-ring
3. Bottom O-ring
4. Crush ring
5. Thermal insulator

Every fuel injector is bench tested. Its electrical and flow characteristics are registered throughout all its operating range in a calibration file.

When an injector is replaced, the matching calibrated file must be loaded in the ECM using B.U.D.S. so that the ECM properly controls the injector.

Injector Visual Inspection

Open LH panel.

Remove drive belt guard. Refer to *DRIVE BELT* section.

Look at the injector area.

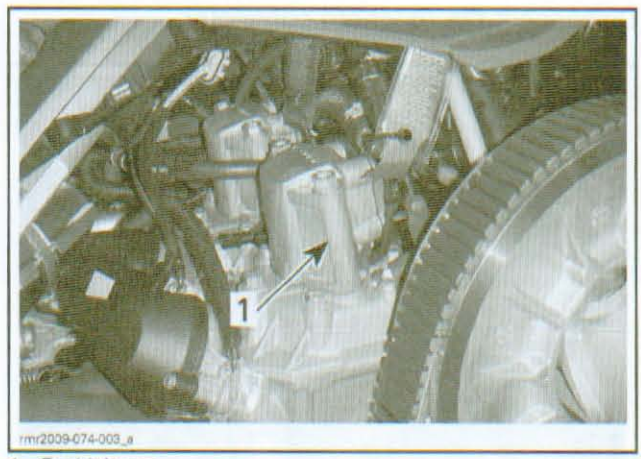

1. Fuel injector

If a fuel leak is noticed in the hose areas, inspect hoses and connections.

www.midwestmanuals.com

If a fuel leak is noticed in injector base area, it indicates a leak of the lower O-ring of injector.

If a dark carbon area is noticed in injector base area, it indicates a leak between injector nozzle and cylinder head. Injector is likely to be under torqued.

Injector Troubleshooting Tips

Most of the time a faulty injector will lead to a poor engine idling and a low RPM around 800 RPM and below. It may also lead to engine misfiring.

Ensure the correct injector is installed on the proper cylinder. Refer to *FUEL INJECTOR POSITION VALIDATION*.

While engine is running, try unplugging an injector connector:

⚠ WARNING

Be careful while working close to rotating parts.

- If engine RPM does not change, this injector could be faulty.
- If engine RPM decreases, the other injector could be faulty.

If one injector is thought to be faulty, proceed with the injector tests.

Injector Leakage Test

Preparation

First make sure fuel pressure is within specifications. Refer to *FUEL TANK AND FUEL PUMP* section.

NOTE: Keep the pressure gauge installed for the leakage test.

Disconnect the magneto connector.

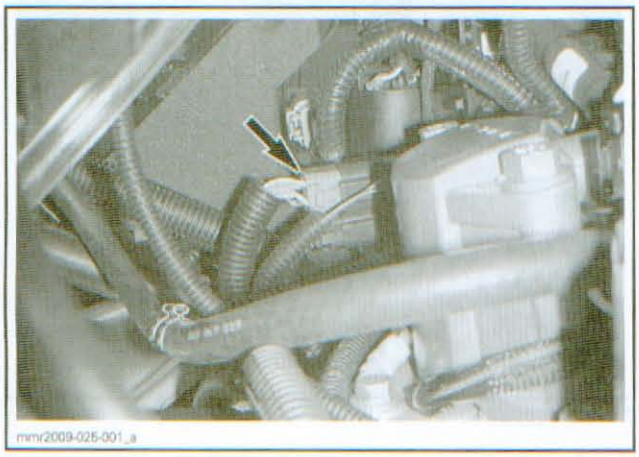

mmr2009-026-001_a

⚠ WARNING

The magneto connector must be disconnected to prevent any spark in the engine compartment should the engine be cranked. Fuel vapors may ignite in presence of a spark creating a fire hazard.

Release fuel pressure. Refer to *FUEL TANK AND FUEL PUMP*.

NOTICE **If fuel pressure is not released, pressure will push injector out of its housing when removing injector. This could damage the injector and lead to an important fuel spill.**

Remove drive belt guard. Refer to *DRIVE BELT*.

Remove secondary air intake silencer. Refer to *AIR INTAKE SYSTEM*.

Unlock ECM support to move ECM as necessary to lift fuel injectors.

NOTE: Injector leakage test can be done on one injector at a time or on both injectors simultaneously.

Unscrew both injectors. Refer to *FUEL INJECTOR REMOVAL* further in this section.

Carefully lift both injectors. Be careful not to pry hoses against their plastic fittings.

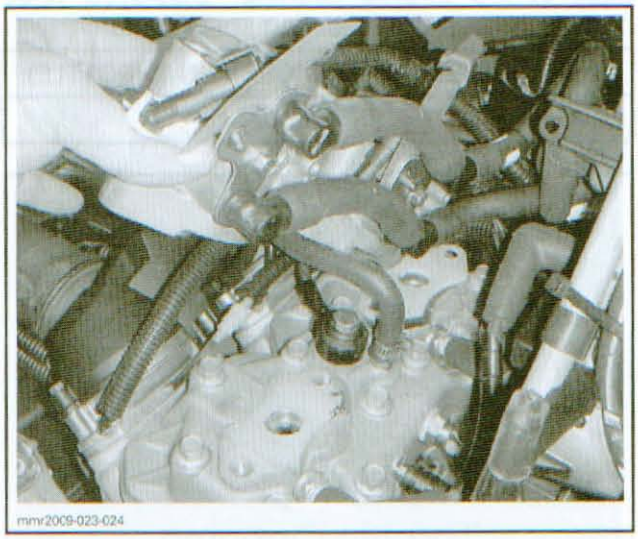

mmr2009-023-024

NOTE: Do not install the thermal insulators against injectors.

Secure both injectors to the INJECTOR RETAINER PLATES (P/N 529 036 137).

www.midwestmanuals.com


529036137

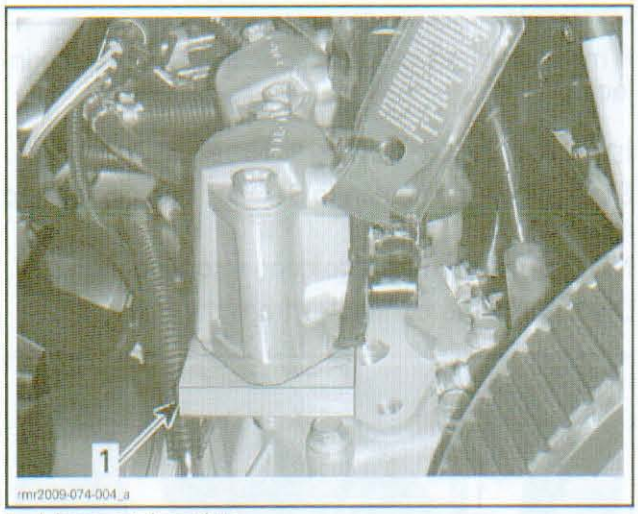

rmr2009-074-004_a

1. *Injector retainer plate*

NOTICE Ensure to position opening in retainer plate on the injector wiring side.

NOTE: An old E-TEC cylinder head can be used assuming injector mating surface is in good condition.

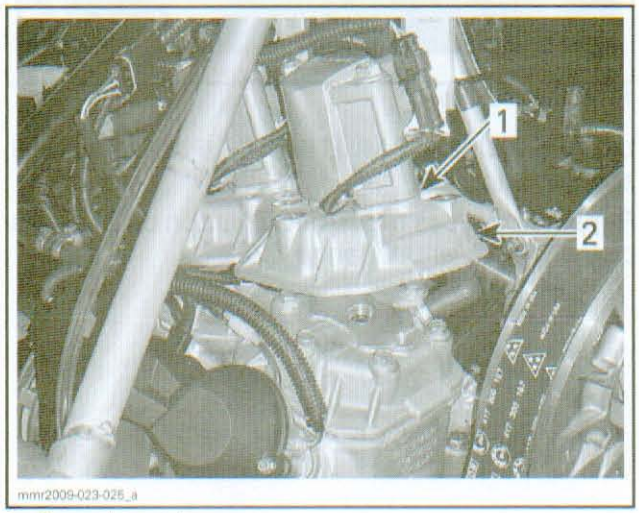

mmr2009-023-026_a

1. *Thermal insulator*
2. *Old E-TEC cylinder head*

Slightly tighten the injector screws.

⚠ WARNING

Injector retainer plate is installed to prevent injector to be projected out when pressurizing the injector during the test. Always use the appropriate technique to prevent injector projection.

Place an appropriate container under injectors.

Ensure spark plug caps are installed on spark plugs.

Ensure there is enough fuel in fuel tank.

Connect B.U.D.S. Refer to *COMMUNICATION TOOLS/B.U.D.S. SOFTWARE*.

Leakage Test

Use the B.U.D.S. software and go in **Activation** tab.

Click and hold the **Fuel Pump** button.

NOTE: Fuel pump will operate as long as button is held depressed in B.U.D.S.

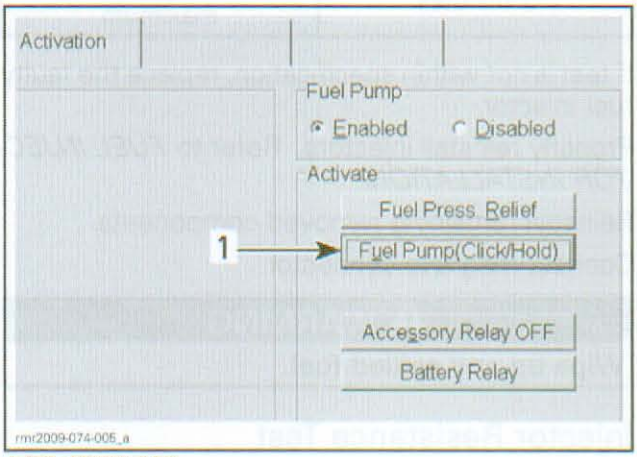

rmr2009-074-005_a

ACTIVATION TAB
1. *Click and hold*

NOTE: Ensure fuel pump is enabled in B.U.D.S.

www.midwestmanuals.com

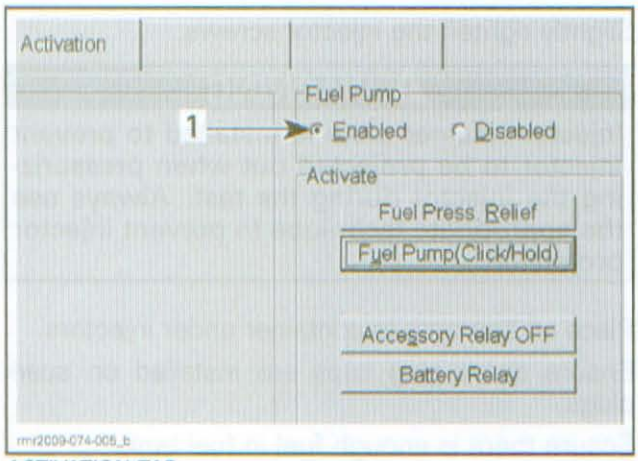

ACTIVATION TAB
1. Pump enabled

Check for fuel leakage from the injector nozzle.

Monitor fuel pressure at fuel pressure gauge. If pressure drops below 275 kPa (40 PSI) during the test, re-activate fuel pump as necessary.

FUEL INJECTOR LEAKAGE	
TEST DURATION	SPECIFICATION
2 minutes	2 drops per minute maximum

If test is not within specification, replace the faulty fuel injector.

Properly reinstall injectors. Refer to *FUEL INJECTOR INSTALLATION*.

Reinstall remaining removed components.

Connect magneto connector.

⚠ WARNING

Wipe up any spilled fuel.

Injector Resistance Test

Remove drive belt guard. Refer to *DRIVE BELT* section.

Disconnect injector connector and measure injector resistance directly on its terminals.

INJECTOR		MEASUREMENT @ 22°C (72°F)
Pin 1	Pin 2	Below 2.7 Ω

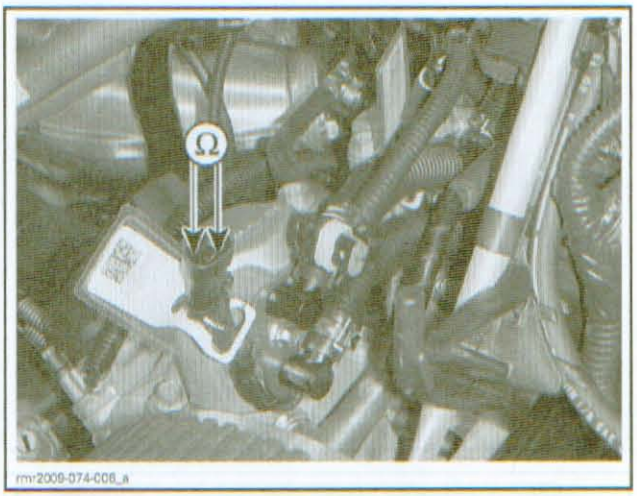

If measurement is out of specification, replace injector.

Injector Input Voltage Test

Set engine stop switch to STOP to cut ignition and injection.

NOTE: Ensure magneto connector is plugged.

Disconnect the connector from the injector.

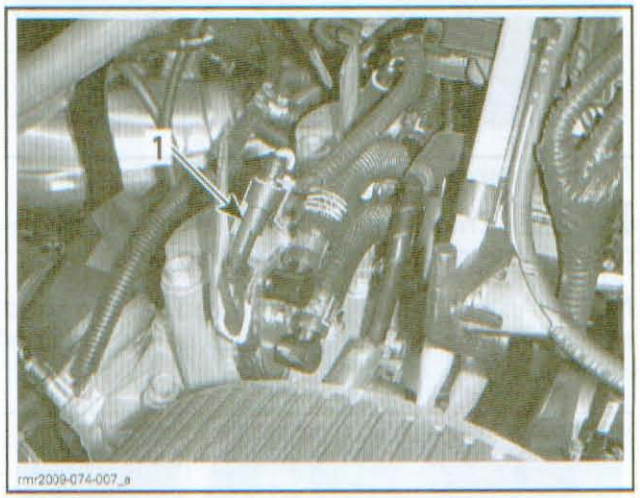

1. Injector connector

Use the FLUKE 115 MULTIMETER (P/N 529 035 868) and set it to **Vdc**.

Repeatedly press the **RANGE** button until the display shows Manual Range 6 0.

www.midwestmanuals.com

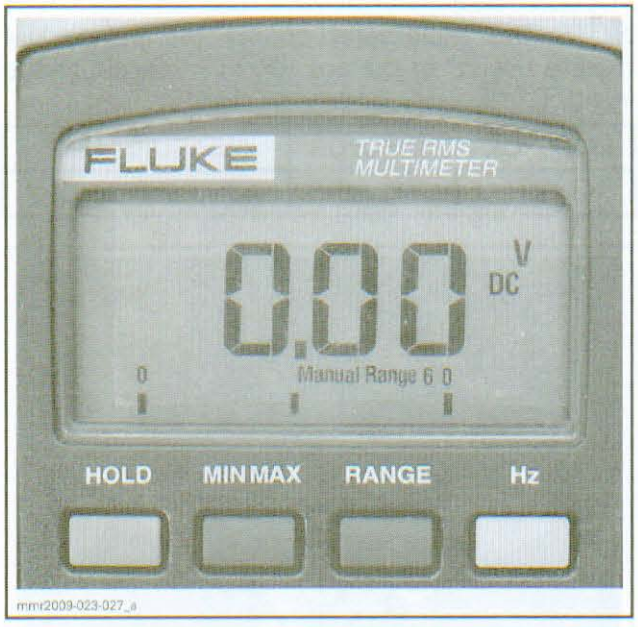

Press the **MIN MAX** button so that the display shows MIN MAX.

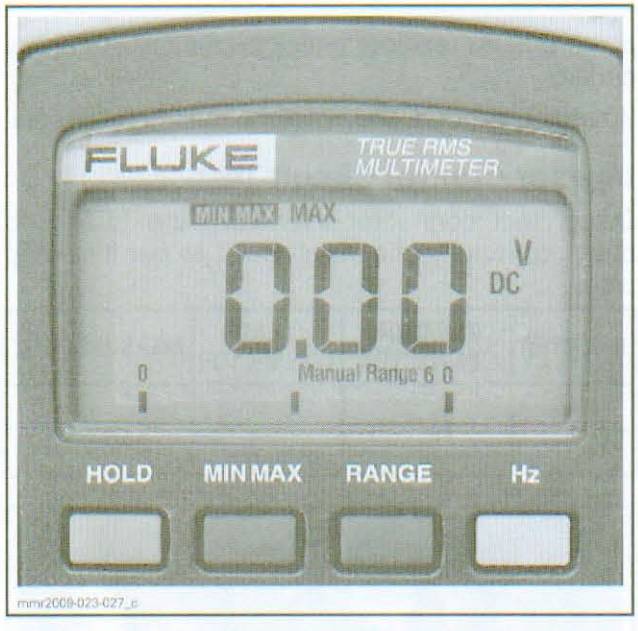

Measure voltage while cranking engine.

INJECTOR CONNECTOR		MEASUREMENT
Pin 1	Battery ground	30 Vdc minimun

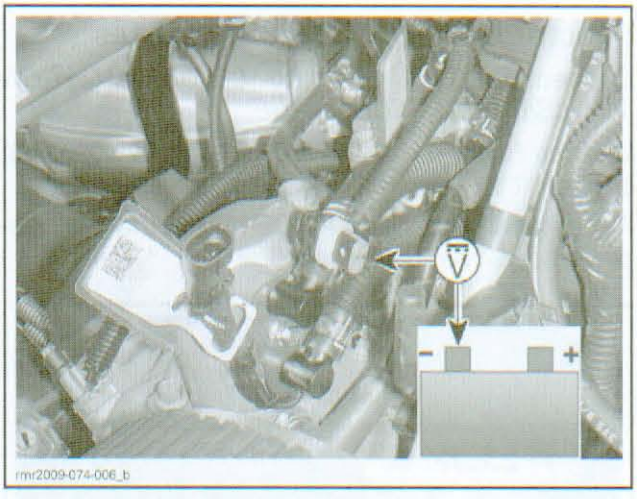

Read the MAX value.

NOTE: Reset multimeter by pressing and holding **MIN MAX** button until meter beeps.

If voltage test is as per specification, check the injector control circuit signal.

If voltage test is not as per specification, check wire continuity from ECM to injector as follows.

Disconnect connector J2 from ECM.

Set multimeter to Ω.

ECM CONNECTOR	INJECTOR CONNECTOR	MEASUREMENT
Connector J2, pin 13	Pin 1	Close to 0 Ω

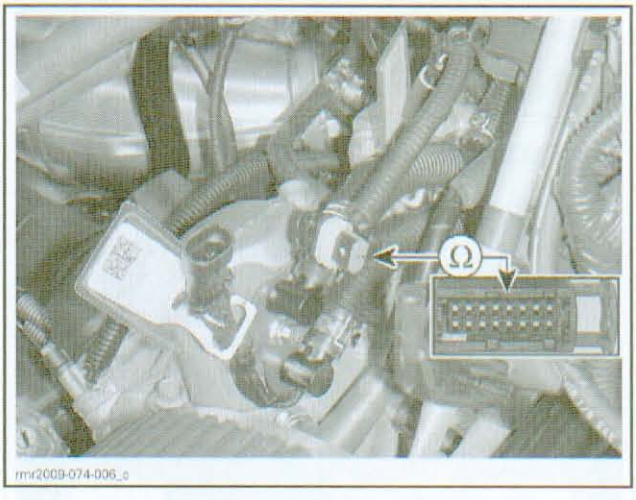

If wiring is faulty, repair/replace wiring/connectors.

If wiring is good, check system voltage. Refer to *CHARGING SYSTEM.*

www.midwestmanuals.com

Injector Control Circuit Signal Test

Connect B.U.D.S. Refer to *COMMUNICATION TOOLS/B.U.D.S. SOFTWARE.*

Use the FLUKE 115 MULTIMETER (P/N 529 035 868) and set it to **Vdc (Hz)**.

Repeatedly press the **RANGE** button until the display shows Manual Range 6.

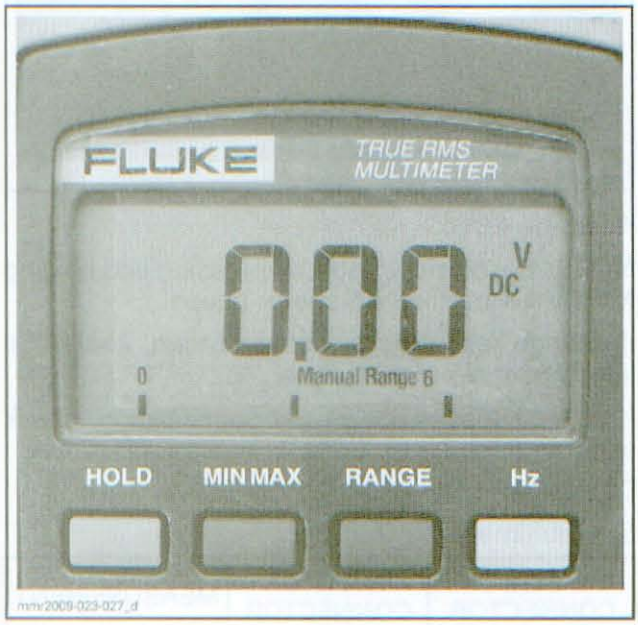

mmr2009-023-027_d

Press the **Hz** button so that the display shows Hz.

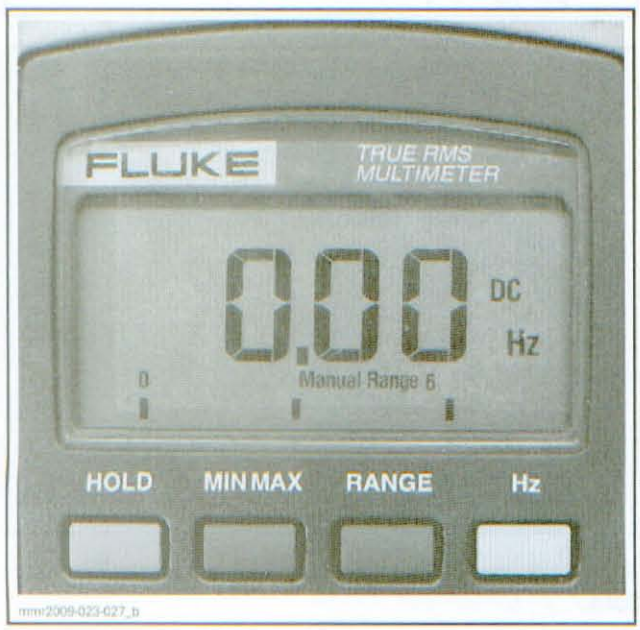

mmr2009-023-027_b

Use the B.U.D.S. software and go to **Activation** tab.

Activate injector and read the frequency on the multimeter.

NOTE: The multimeter counts the pulses per minute (Hertz) of current the ECM sends to the injector.

INJECTOR CONNECTOR		MEASUREMENT
Pin 1	Pin 2	Approximately 2 Hz

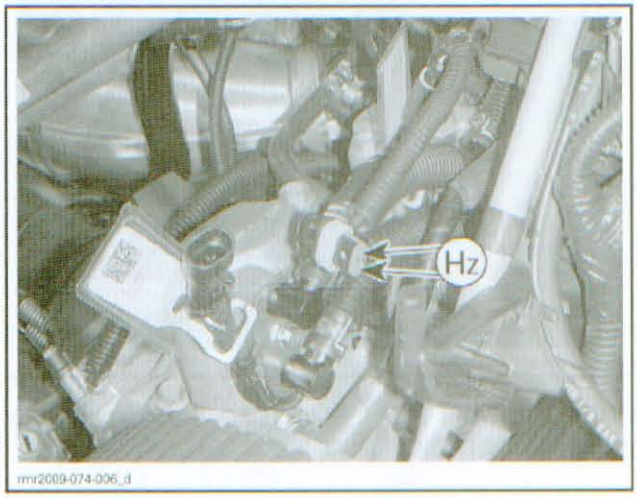

mmr2009-074-006_d

If there is no reading, check continuity of control circuit.

If reading is good, the control circuit is functional.

Injector Control Circuit Test

Disconnect connector J1B from the ECM and check continuity of control circuit as per following table.

INJECTOR	INJECTOR CONNECTOR	ECM CONNECTOR	MEASUREMENT
MAG	Pin 2	J1B, pin 8	Close to 0 Ω (continuity)
PTO		J1B, pin 1	

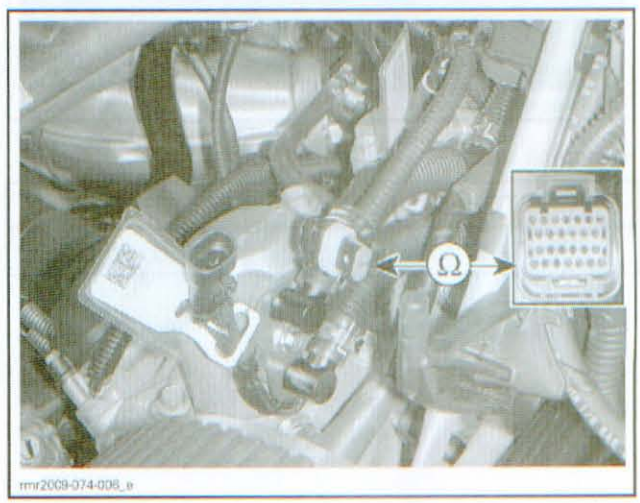

mmr2009-074-006_e

If continuity is faulty, repair wiring harness.

www.midwestmanuals.com

Fuel Injector Removal

IMPORTANT: New O-rings and crush ring must be installed if injector is removed (injector disassembly required). Otherwise, leakage or damage to injector/cylinder head might occur.

Remove drive belt guard. Refer to *DRIVE BELT*.

Remove primary and secondary air intake silencers. Refer to *AIR INTAKE SYSTEM*.

Disconnect magneto connector.

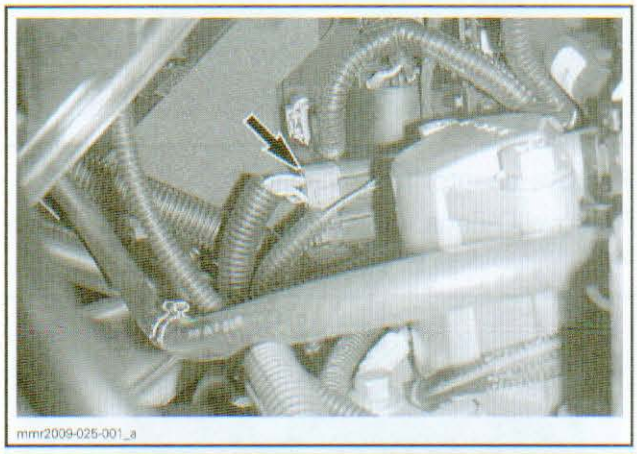

⚠ WARNING

The magneto connector must be disconnected to prevent any spark in the engine compartment should the engine be cranked. Fuel vapors may ignite in presence of a spark creating a fire hazard.

Clean injector area.

Release the fuel pressure in the system using B.U.D.S. Refer to *FUEL TANK AND FUEL PUMP* section.

NOTICE **If fuel pressure is not released, pressure will push injector out of its housing when removing injector. This could damage the injector and lead to an important fuel spill.**

⚠ WARNING

Fuel vapors in the engine compartment could be lit by a spark. This might create a fire.

Disconnect injector connector.

Install a rag under the hose ends to catch fuel spillage.

Remove retainer.



1. Retainer screw

Disconnect fuel hoses from fuel injector.

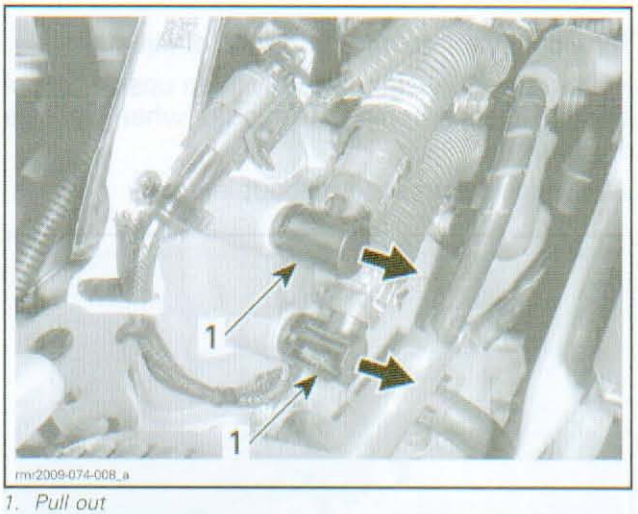

1. Pull out

⚠ WARNING

More fuel will flow out than usual injectors. Work in a well ventilated area and wipe up spilled fuel.

Unscrew injector screws.

Gently pull up injector.

NOTE: If injector is to be reinstalled, mark it to reinstall it to the same cylinder.

NOTICE **Use caution when handling fuel injector. Never hold injector by its electrical wires. Prevent dirt and debris from entering fuel inlet and outlet ports of injectors or fuel hoses. Cover the injector nozzle port in cylinder head to prevent contamination of combustion chamber.**

www.midwestmanuals.com

Fuel Injector Disassembly

To remove injector from its housing, use a Snap-on slide hammer puller including:

- SNAP-ON SCREW (P/N CJ93-1)
- SNAP-ON HAMMER (P/N CJ125-6).

The puller is used in conjunction with the INJECTOR ADAPTER (P/N 529 036 136).

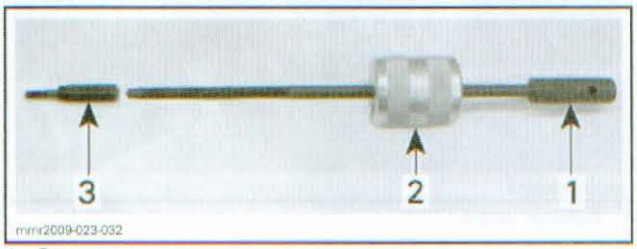

1. *Snap-on screw*
2. *Snap-on hammer*
3. *Injector adapter*

Thread injector adapter into face of injector.

Hold injector housing securely in an upside up position to avoid dropping the injector when it will be pulled out.

Work slide hammer to pull out injector.

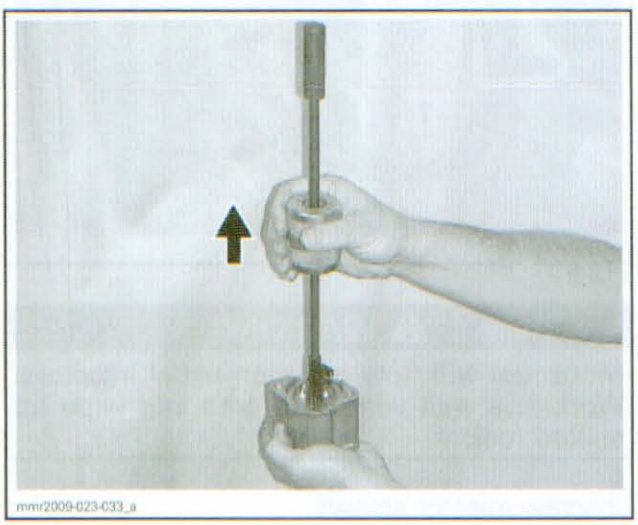



Remove adaptor from injector.

Remove O-rings, crush ring and filter from injector.



1. *Crush ring*
2. *ORANGE O-ring*
3. *Filter*
4. *BLUE O-ring*

Inspect and clean injector filter.

www.midwestmanuals.com

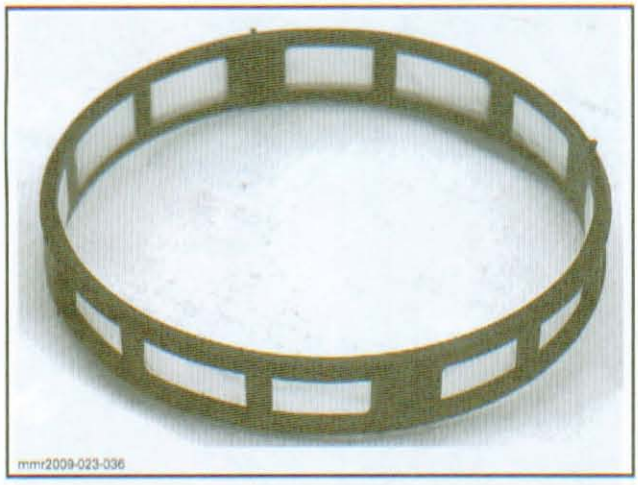

Fuel Injector Assembly

Reverse procedure for assembly. However, pay attention to the following.

IMPORTANT: Apply oil injection to O-rings.

Install a new crush ring.

Install a new orange O-ring on top.

NOTICE Always use BRP snowmobile O-rings. They are designed to work in low temperature environment.

Install filter. Ensure filter is retained firmly on injector. Otherwise, remove it, invert it half a turn, then reinstall. If it still not retained securely, install a new one.

Install a new blue O-ring at bottom.



OIL INJECTION ON O-RINGS
1. *ORANGE*
2. *BLUE*

Reinstall injector into its housing.

Ensure to position injector wires as shown.

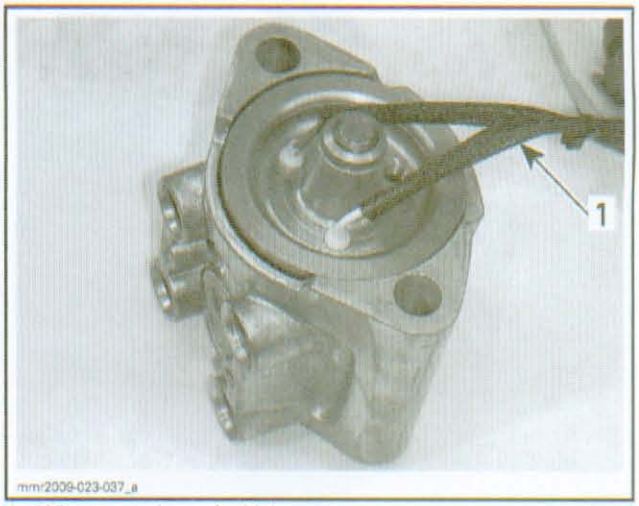

1. *Wires opposite to fuel inlet ports*

Press on injector outer face until injector seats in its housing. See illustration.

NOTICE Never press or tap the injector tip.

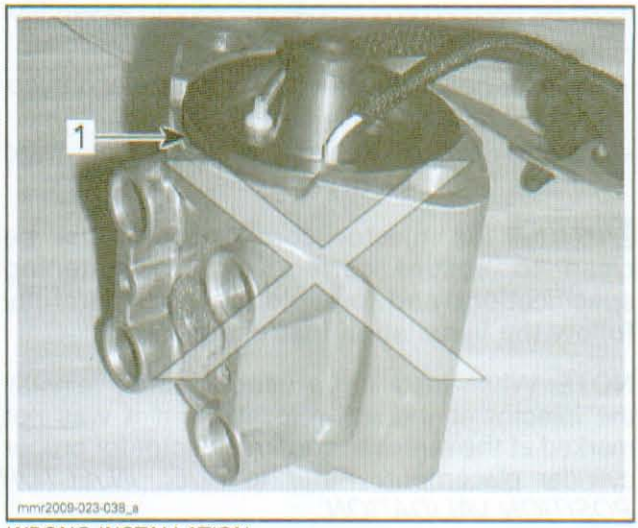

WRONG INSTALLATION
1. *Injector not fully inserted in its housing*

www.midwestmanuals.com



CORRECT INSTALLATION
1. Injector fully inserted in its housing

Fuel Injector Installation

The following items and their mating surfaces must be cleaned and inspected prior to assembly:

- Injector
- Cylinder head: injector housing base and injector tip contact area
- Injector screw threads and cylinder head threads (**must be dry**).

NOTICE **All injector components must be clean to ensure correct torque tightening specifications and to avoid leakage. Carefully follow the installation instructions.**

NOTE: When installing a **used** injector, reinstall the injector at the same location. If it was not marked at the removal, confirm injector for proper cylinder placement. Refer to *FUEL INJECTOR POSITION VALIDATION*.

1. Position the thermal insulator on cylinder head.



2. Install injector on cylinder head.

NOTICE **Torque injector prior to installing fuel hoses.**

3. Torque both screws in a 4 step sequence by tightening alternately each screw:
   - 3.1 Hand tighten
   - 3.2 15 N•m (133 lbf•**in**)
   - 3.3 30 N•m (22 lbf•ft)
   - 3.4 45 N•m (33 lbf•ft).
4. Check condition of fuel hose O-rings and plastic flange on hose fittings.
5. Apply injection oil to O-rings.
6. Insert fuel hoses into injector housing.

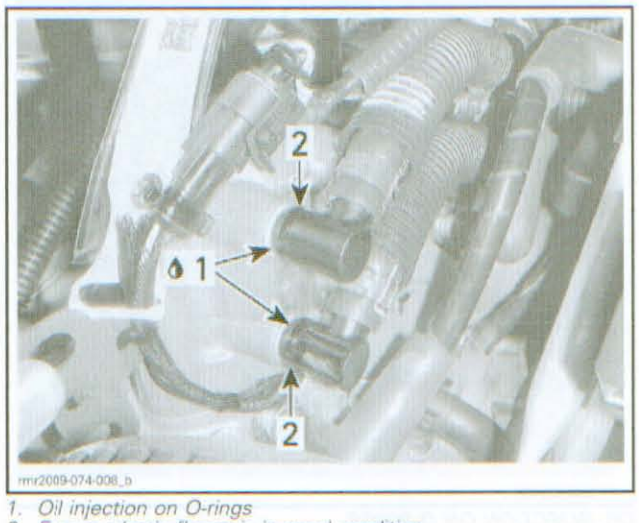

1. Oil injection on O-rings
2. Ensure plastic flange is in good condition

NOTE: Both hose fittings must be fully seated into injector housing.

7. Hose retainer must engage the outer groove of the injector housing fittings.

www.midwestmanuals.com

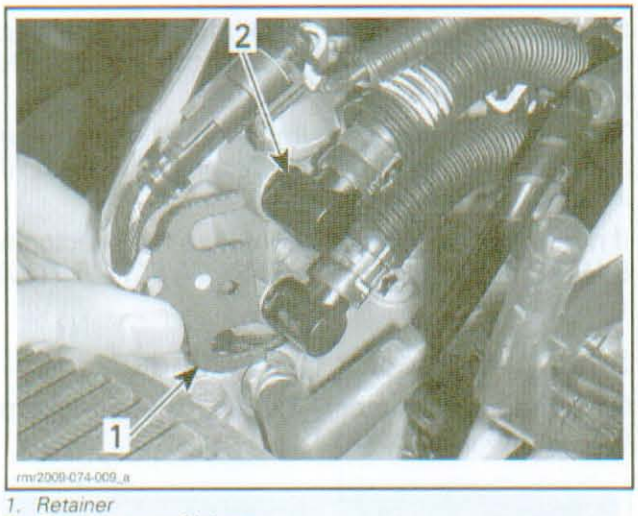

1. Retainer
2. Outer groove of injector

NOTE: Make sure the hole on the hose retainer to attach the wiring harness is on top.

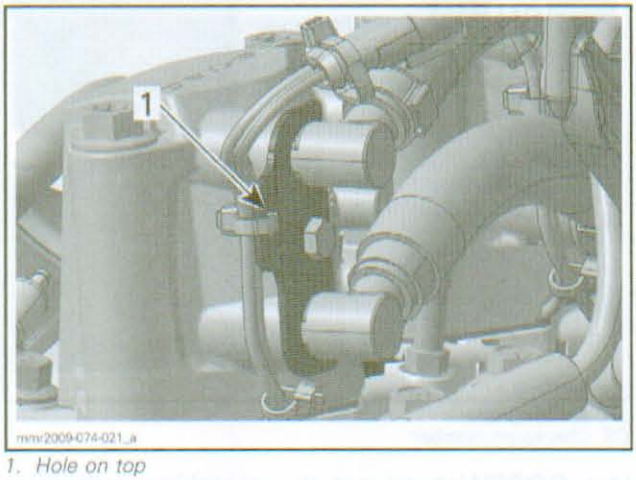

1. Hole on top

8. Install a NEW screw to secure hose retainer.

NOTICE The screw features a scotch grip threadlocker coating that is destroyed when loosening screw. Always replace screw with a new one each time it is loosened.

9. Torque retainer screw to 5 N•m (44 lbf•**in**).



1. Retainer screw

10. Apply some DIELECTRIC GREASE (P/N 293 550 004) in fuel injector connector.
11. Reconnect fuel injector connector.

NOTICE Never fasten the electrical connector to the injector. The connector must be "floating".

12. When installing a **new** injector, use B.U.D.S. to configure it in the ECM. Refer to *SETTING AN INJECTOR TO A CYLINDER*.

NOTE: The engine will run with an improperly matched injector. However, the engine may have a rough idle, a reduced fuel economy or a lean running condition.

⚠ WARNING

Perform a fuel pressure test and make sure there is no leak.

Fuel Injector Position Validation

For troubleshooting or when reinstalling a used injector, injector must be confirmed for proper cylinder placement by serial number using B.U.D.S. Otherwise, improper idling or higher fuel consumption may occur.

NOTE: To configure a new injector at the installation, refer to *SETTING AN INJECTOR TO A CYLINDER*.

Look for a tag besides the injector.

www.midwestmanuals.com

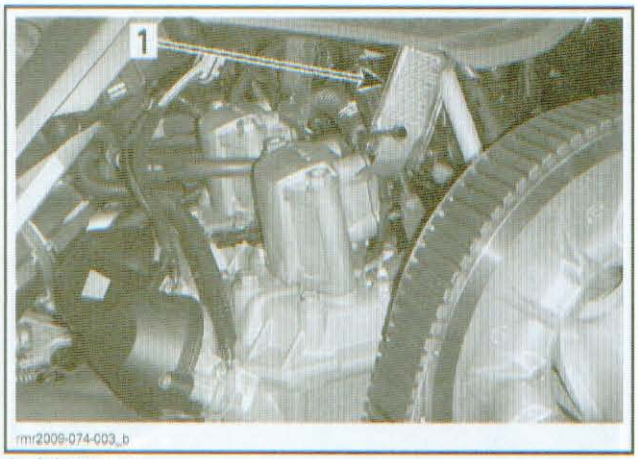

1. Injector tag

Note the injector serial number (SN) on the tag of the injector you wish to validate.



SN: Serial number
CS: Checksum number

From B.U.D.S., go to **Injector Coefficient** in **Setting** tab under **ECM** tab.

Look at the PTO or MAG injector S/N. This gives the configured injector in the ECM.

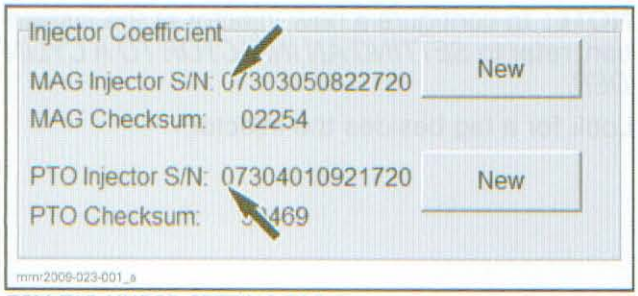

ECM TAB UNDER SETTING TAB

Compare the **MAG** or **PTO Injector S/N** that is configured in the ECM with the injector SN installed on the engine.

The installed injector number must match the number seen in B.U.D.S. Otherwise, check if injectors are mixed up.

If numbers do not match, configure the injector in B.U.D.S. Refer to *SETTING AN INJECTOR TO A CYLINDER*.

Setting an Injector to a Cylinder

Note the serial number (SN) and the checksum (CS) on the injector tag.

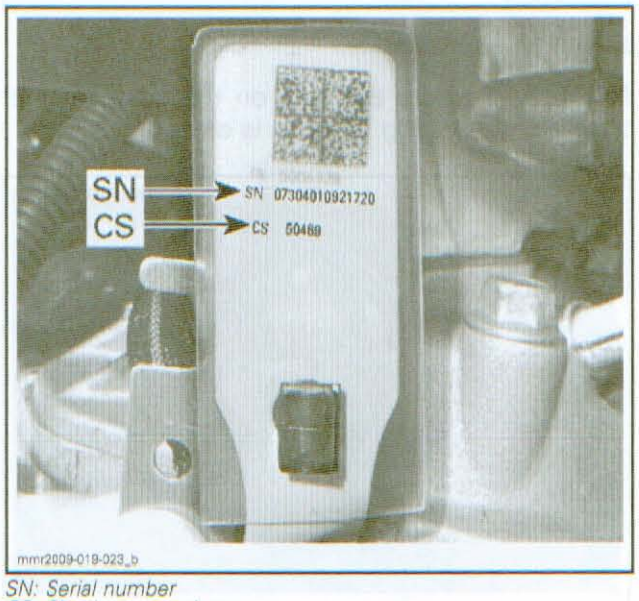

SN: Serial number
CS: Checksum number

Use BOSSWeb to get the matching calibration file.

Save the calibration file to your PC computer in the folder: C:\Program Files\BRP\BUDSCommon\InjectorCoefficients.

Start B.U.D.S. and click on the **Read Data** button.

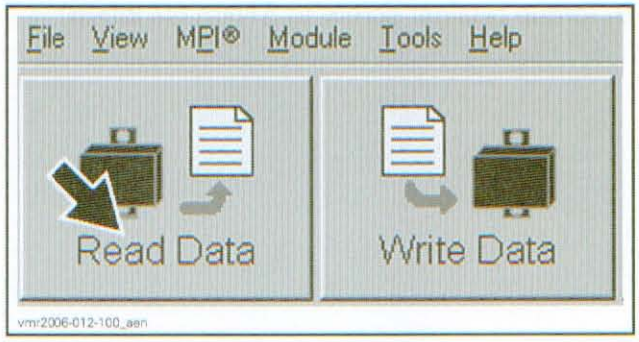

Look into **Injector Coefficient** in **Setting** tab.

www.midwestmanuals.com

Click on the **New** button of the injector you want to replace (MAG or PTO).

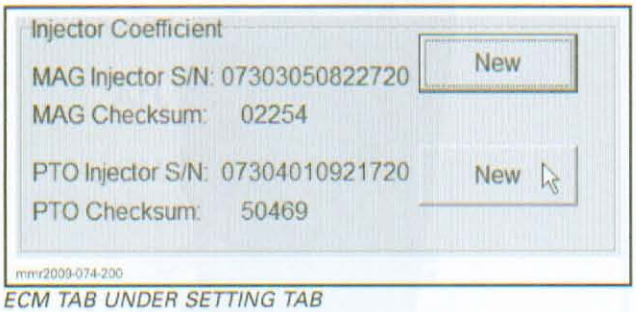

ECM TAB UNDER SETTING TAB

NOTE: Every time the **New** button is clicked, B.U.D.S. will automatically go in the **Injector Coefficients** folder.

Select the injector serial number file that matches the injector installed on the engine.

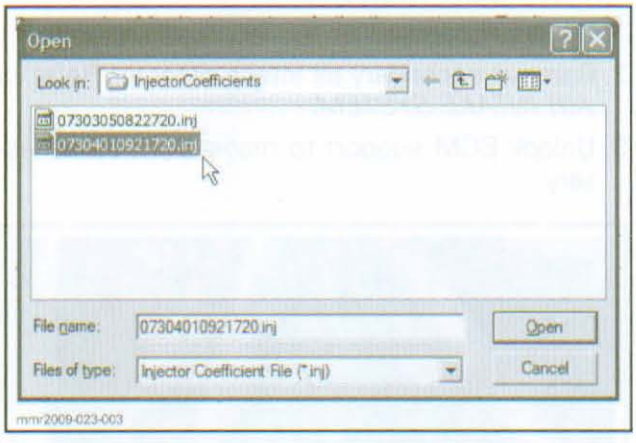

Then, enter the checksum matching the injector chosen.

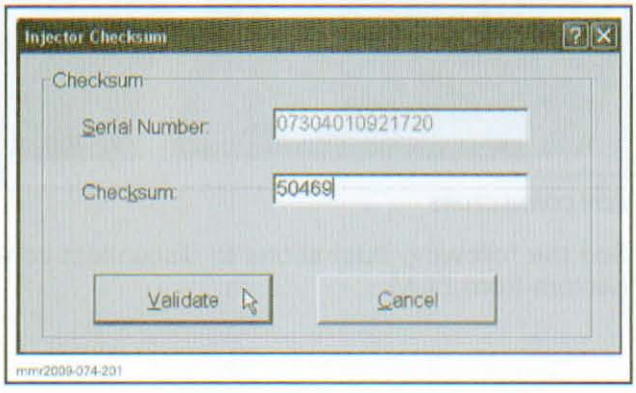

The file will be quickly read and loaded in B.U.D.S.

Then, click the **OK** button when the confirmation box appears.

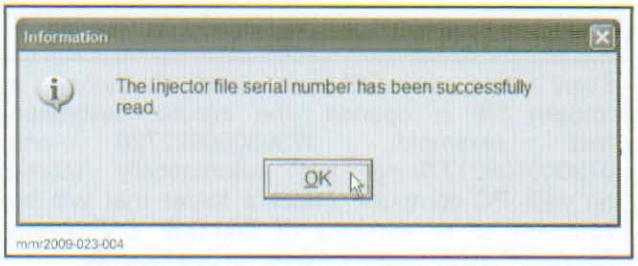

Click on the **Write Data** button.

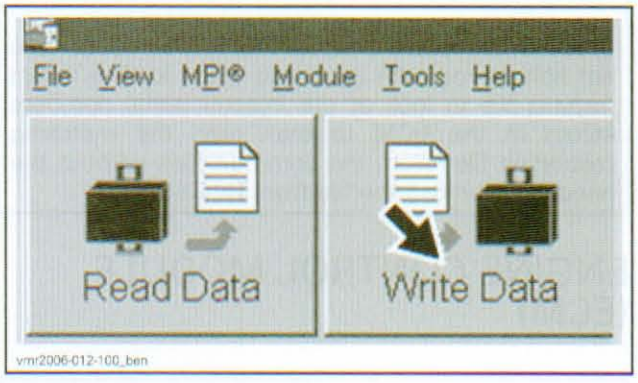

IMPORTANT: To make sure the proper file has been set into the ECM, do the following:

1. Read the data again in B.U.D.S.
2. Look into **Injector Coefficient** in **Setting** tab.

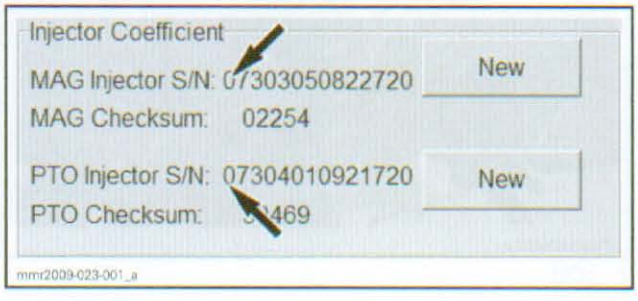

3. Ensure the S/N in B.U.D.S. matches the SN of the injector installed on the engine and the PTO/MAG numbers are not inverted.
4. If there is a mismatch, reload the proper configuration file. Write data and read it again to recheck.

www.midwestmanuals.com

NOTE
Every time an ECM is read or when a **.mpem** file is opened, the injector calibration files (example: 07303050822720 and 07304010921720.inj) are automatically stored on your PC computer under a folder that will be common to all versions of B.U.D.S: C:\Program Files\BRP\BUDSCommon\InjectorCoefficients. If B.U.D.S. is uninstalled, the files won't be deleted. If you ever replace an ECM from which you were not able to read the data, you could load its latest **.mpem** file to look at the injector serial numbers stored in the ECM to then read the matching calibration files from the common files without the need to download the file from BOSSWeb.

ENGINE CONTROL MODULE (ECM)

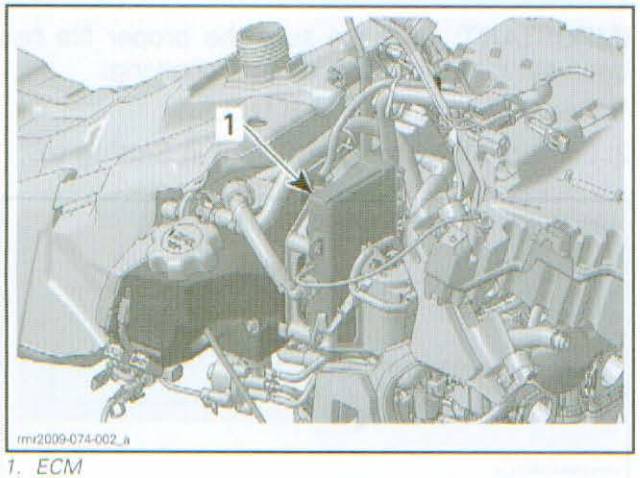

1. ECM

NOTE: Prior to replacing an ECM, ensure to conduct all testing procedures.

ECM Connectors

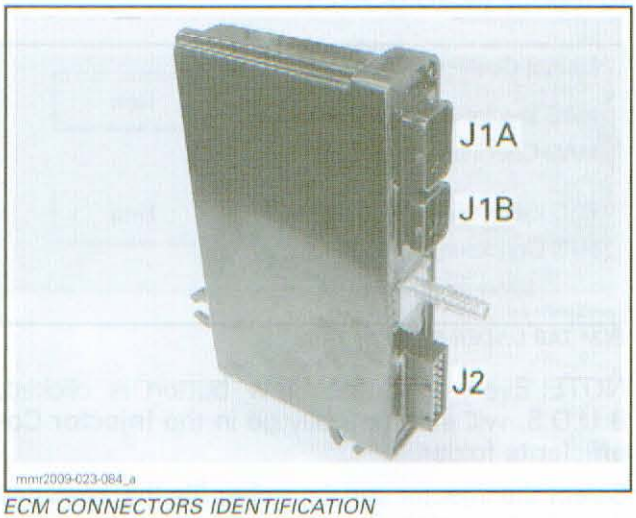

ECM CONNECTORS IDENTIFICATION

To reach ECM connectors:

1. Open LH panel.
2. Remove secondary air intake silencer. Refer to *AIR INTAKE SYSTEM*.
3. Unlock ECM support to move ECM as necessary.



ECM CONNECTORS

See the following illustrations to disconnect connectors from ECM.

www.midwestmanuals.com

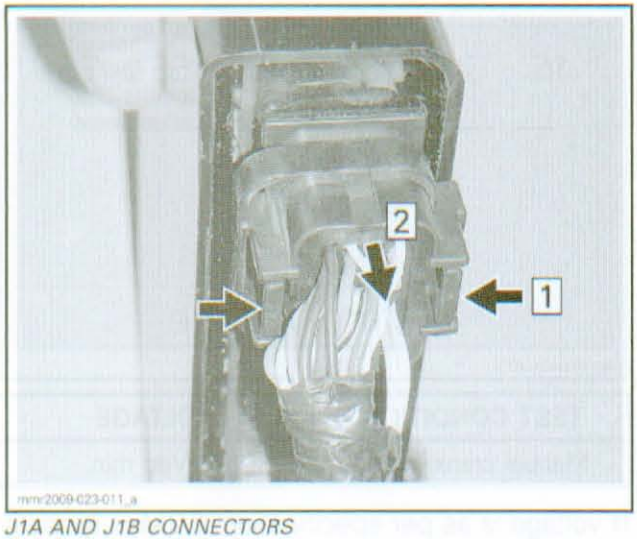

J1A AND J1B CONNECTORS
Step 1: Push and hold tabs
Step 2: Pull out connector

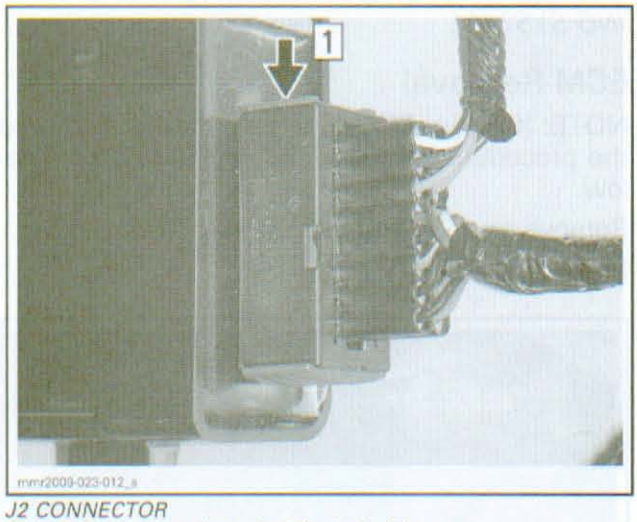

J2 CONNECTOR
Step 1: Push down the end of the lock slider

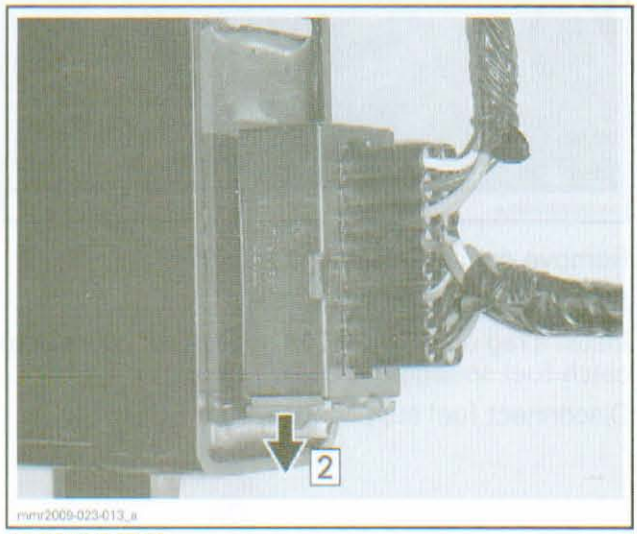

J2 CONNECTOR
Step 2: Fully push down the lock slider

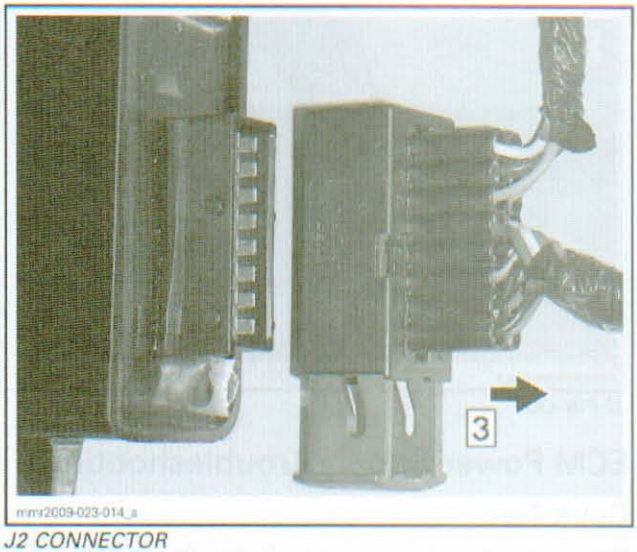

J2 CONNECTOR
Step 3: Pull out connector

ECM Connector Pin-outs

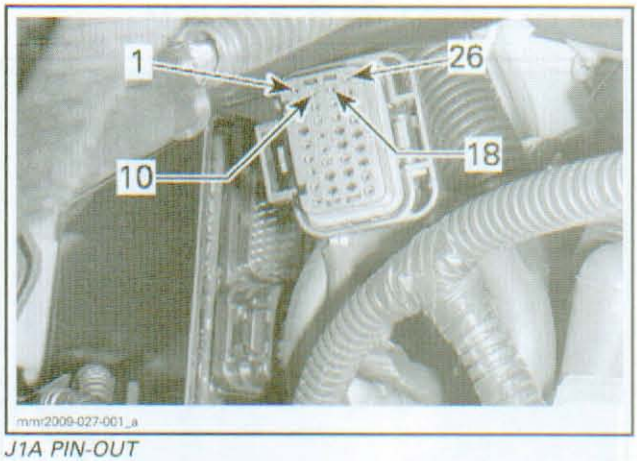

J1A PIN-OUT

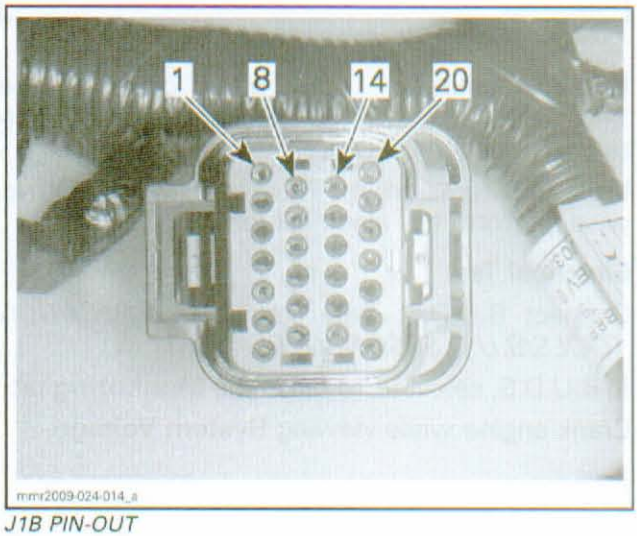

J1B PIN-OUT

www.midwestmanuals.com

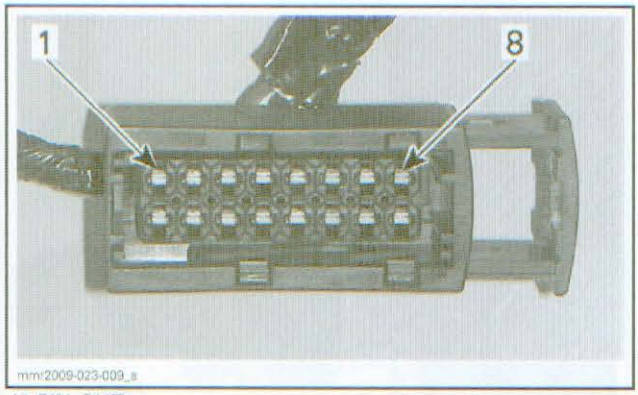

J2 PIN-OUT

ECM Power Supply Troubleshooting

Quick Test

Remove drive belt guard. Refer to *DRIVE BELT* section.

While one is cranking engine, check if the 2nd LED from the bottom turns on at the ECM.

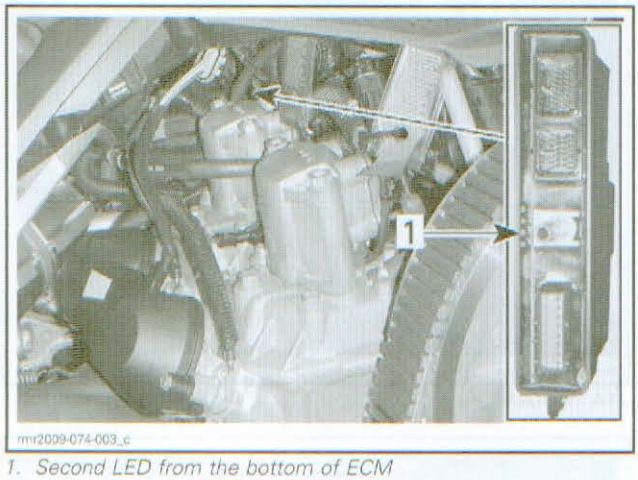

1. Second LED from the bottom of ECM

NOTE: Alternately, you may connect the T-HARNESS (P/N 529 035 869) and a 12 V battery to supply the ECM.

If the LED turns on, the ECM is powered. Otherwise, perform the electrical test.

Electrical Test

Connect B.U.D.S. Refer to *COMMUNICATION TOOLS/B.U.D.S. SOFTWARE*.

In B.U.D.S, select **ECM** tab in the **Monitoring** tab.

Crank engine while viewing **System Voltage**.

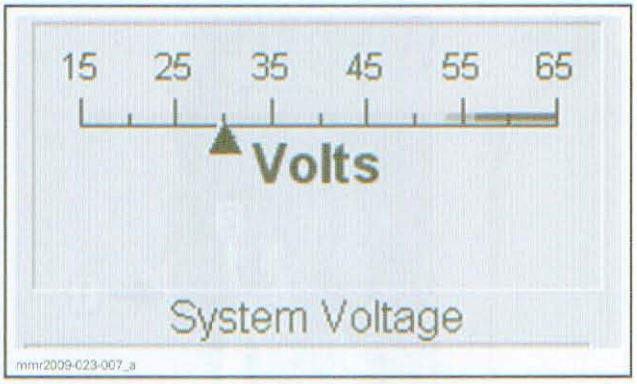

TEST CONDITION	VOLTAGE
Manual crank speed	30 Vdc min.

If voltage is as per specification, ECM is properly powered.

If voltage is out of specification, refer to *CHARGING SYSTEM*.

ECM Removal

NOTE: If a new ECM is to be installed, first read the procedures in the *ECM REPLACEMENT* below.

Remove muffler. Refer to *EXHAUST SYSTEM*.

Remove the acoustic panel.

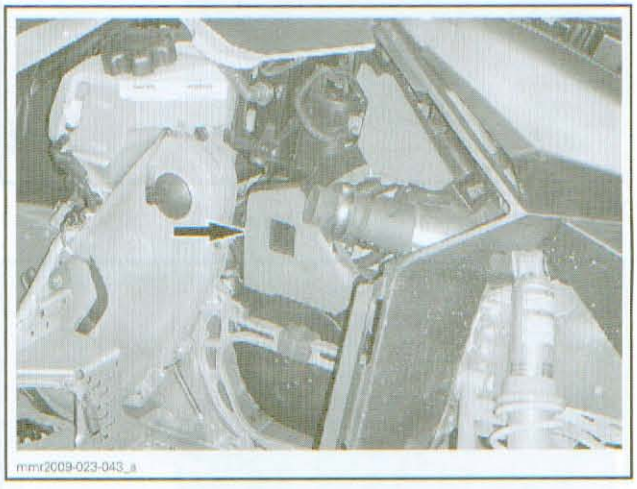

Remove console. Refer to *BODY*.

Set engine stop switch to STOP.

Install a rag under the ECM hose quick connect to catch fuel spillage.

Disconnect fuel supply hose from ECM.

www.midwestmanuals.com

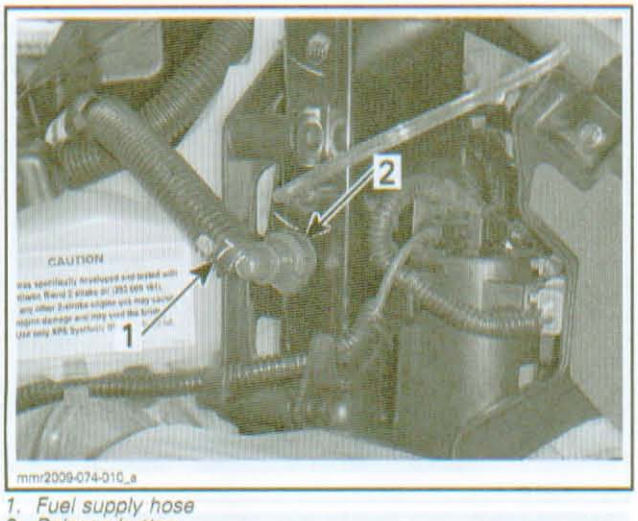

1. *Fuel supply hose*
2. *Release button*

Place a container under the hose connector to recover fuel.

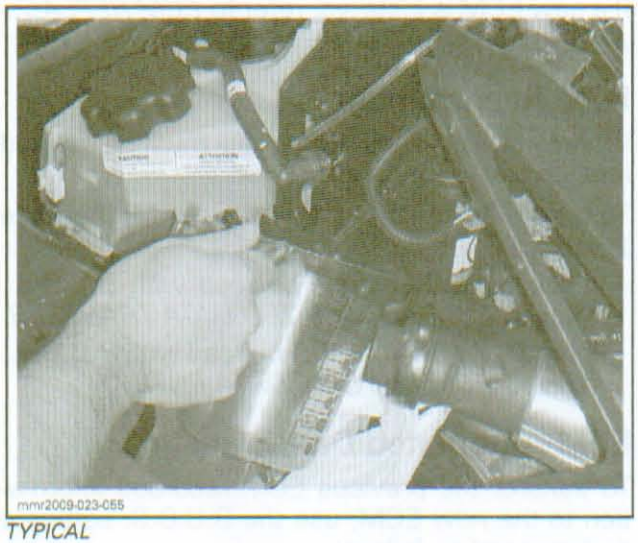

TYPICAL

Lean hose end to drain fuel.

Unlock ECM.

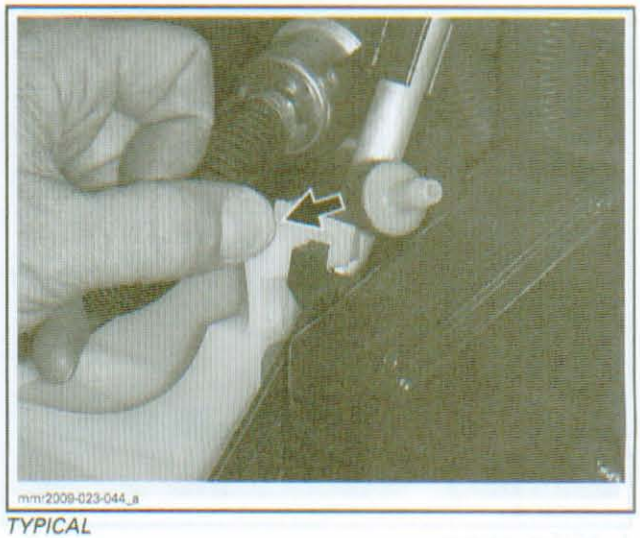

TYPICAL

Slightly pull out ECM.

Lean ECM to drain fuel from ECM.

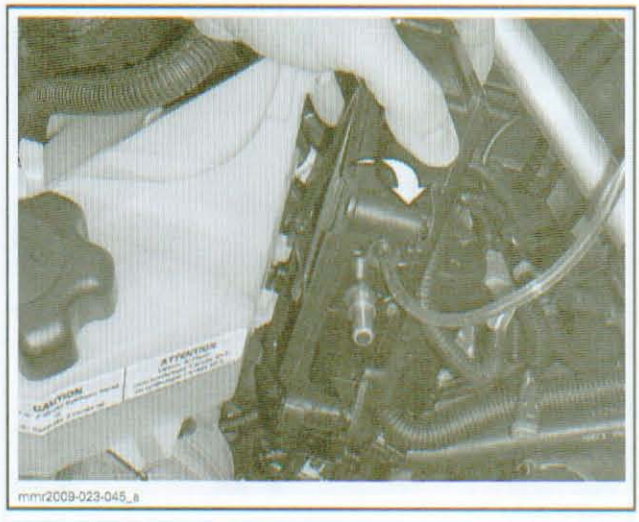

Disconnect APS tube from ECM.

Disconnect ECM connectors.

Disconnect capacitor connector.

Disconnect remaining fuel hose from ECM.

www.midwestmanuals.com

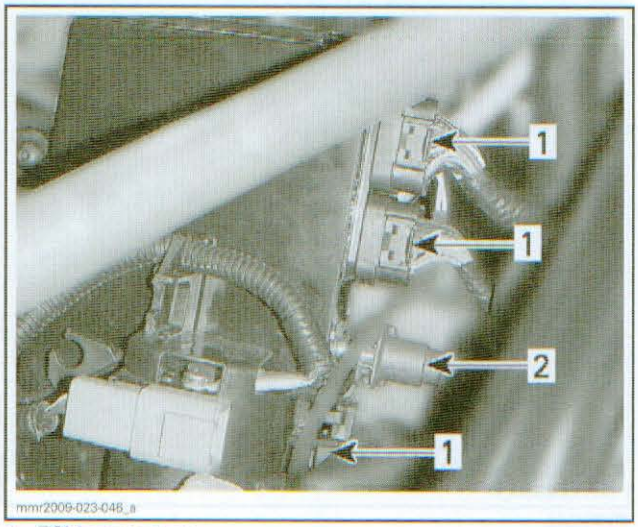

1. *ECM connectors*
2. *Fuel hose*

Detach ECM from its support.

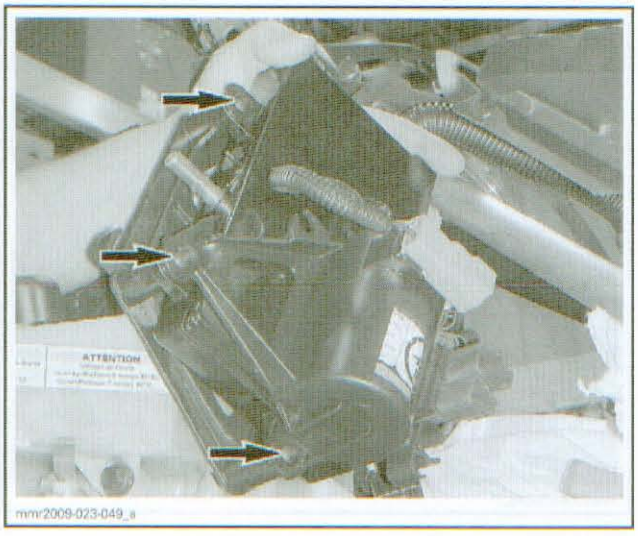

ECM Installation

Reverse removal procedure but pay attention to the following.

Set engine stop switch to STOP.

Ensure to engage tabs of ECM in lugs of oil injection reservoir.



⚠ WARNING

Wipe up all spilled fuel.

If a new ECM is installed, refer to *ECM REPLACEMENT* below.

ECM Replacement

When installing a new ECM, data must be entered and several resets are required.

To transfer/enter data to the new ECM, there are 2 possible methods.

- If the faulty ECM can be read with B.U.D.S., refer to *ECM AUTOMATED DATA TRANSFER*.
- If the faulty ECM cannot be read with B.U.D.S., refer to *ECM MANUAL DATA ENTRY*.

ECM Automated Data Transfer

To transfer the previous ECM recorded information to the new ECM, use the B.U.D.S. software and proceed as follows.

In B.U.D.S., click the **Read Data** button to load the information from the faulty ECM.

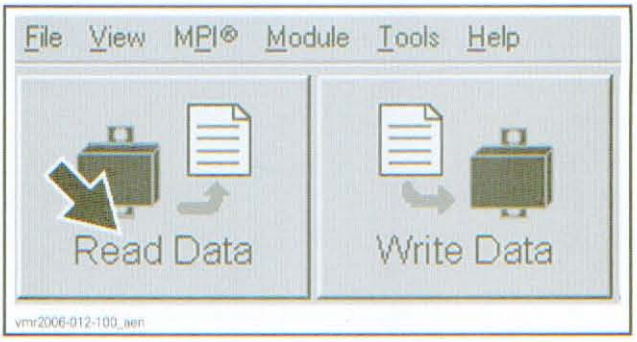

Keep B.U.D.S. running while replacing ECMs. The data will remain stored in the PC computer as long as B.U.DS. is running.

Remove the old ECM.

www.midwestmanuals.com

Install and connect the new ECM.

NOTE: The beeper will continuously sound a sequence of 11 beeps meaning that the DESS key is not programmed. To stop the beeps, remove key.

From B.U.D.S., choose **ECM**, **Replace** under **Module**.

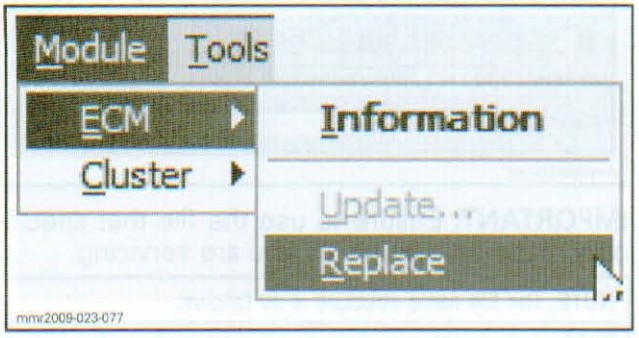

B.U.D.S will automatically write the data from the PC computer into the new ECM.

Then, B.U.D.S. will display the following box asking to carry out the **Closed Throttle Reset**. Clicking **OK** will actually do the reset.

NOTE: Refer to **Closed Throttle Reset (TPS)** in *ADJUSTMENTS* in this section for the specific requirements of this reset.

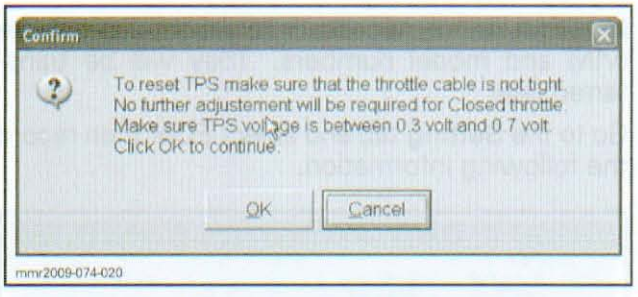

Go in the **Setting** tab and do the following:

1. Carry out the **Rave Mid-Position** reset procedure. Refer to *3D RAVE* section.

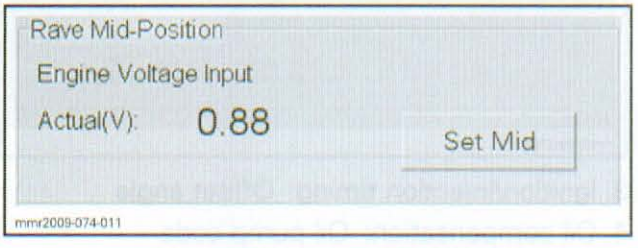

2. View all the settings in the **Setting** tab and verify if they seem to be in the proper range. Otherwise, carry out the required reset/setting procedures.



In B.U.D.S., click the **Write Data** button to save the information to ECM.

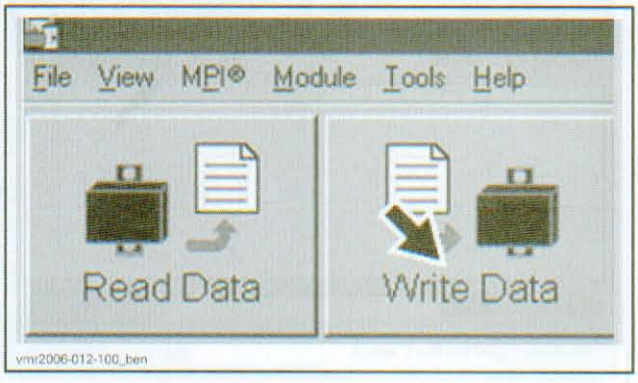

Lift rear of vehicle and safely support.

Start the engine and increase engine speed above 6000 RPM to be sure no fault appears.

Let engine idle to ensure idle is adequate.

If engine does not run as expected, ensure that the injector calibration files are valid. Check with the tag of the injectors installed on vehicle.

Reinstall remaining removed parts.

ECM Manual Data Entry

There are 2 possible methods to collect the required information. The 1st being the easiest.

- Use B.U.D.S. software and get the data from a saved .mpem file on your PC computer.
- Collect the information from the vehicle and get the injector coefficient files from BOSSWeb.

1st Collecting Method: Get the Data from a Saved .mpem File

Remove the faulty ECM.

Install and connect the new ECM.

Use B.U.D.S. software.

Click on the **Open** button.

www.midwestmanuals.com

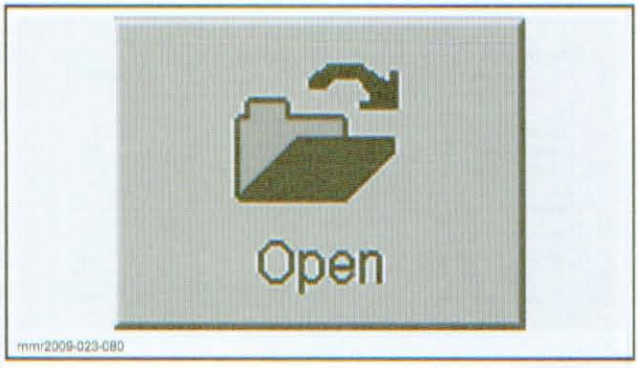

Click once on the **Folder Up** button in the **Open** box.

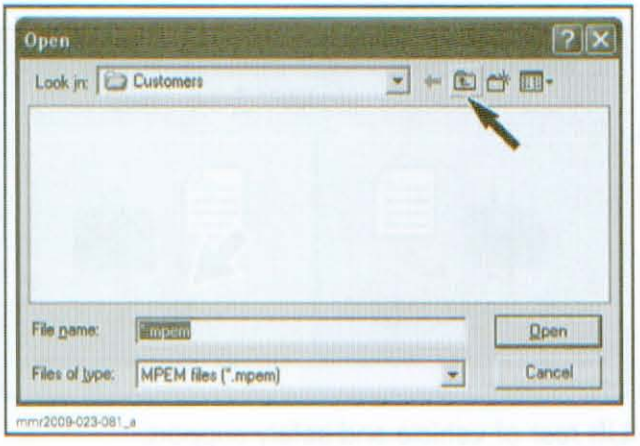

Double click on the **AutoSave** folder.

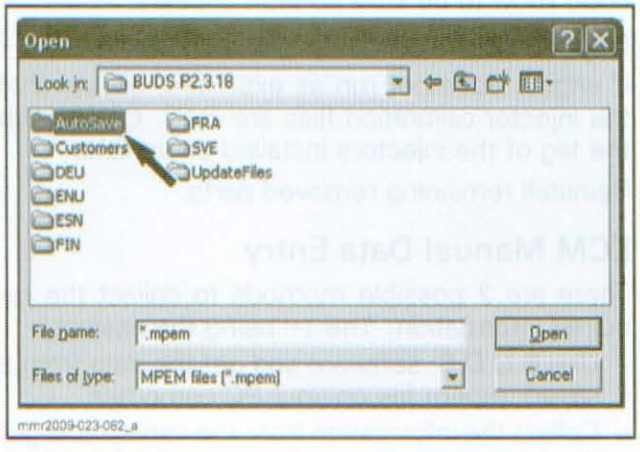

NOTE: You may have to go to an other **AutoSave** folder from a previous version of B.U.D.S.

Choose the latest file saved for this specific vehicle.

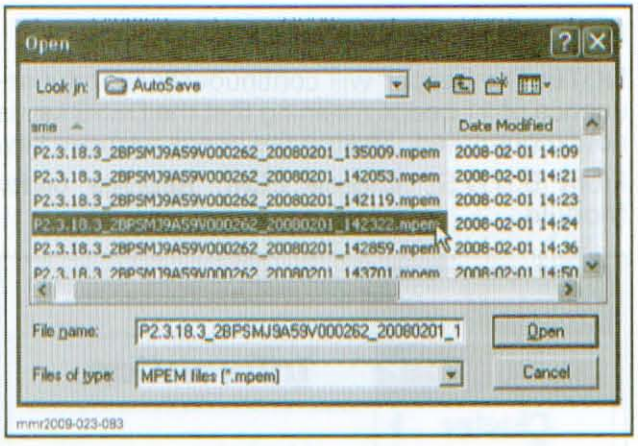

IMPORTANT: Ensure to use the file that specifically matches the vehicle you are servicing.

NOTE: The file name structure is as follows:
BUDS version_VIN_date read (yyyymmdd)_hour read (hhmmss).mpem
Example:
P2.3.18.3_2BPSMJ9A59V000262_20080201_142322.mpem

Go in the **Vehicle** tab and record the following information.

1. Engine number (without the leading "M")
2. Customer.

NOTE: It is not necessary to record the vehicle (VIN) and model numbers. They will be transferred later.

Go to the **Setting** tab and select **ECM** then record the following information.



3. Ignition/Injection timing: Offset angle
4. Oil compensation: Oil pump code
5. Injector coefficients: MAG/PTO injectors S/N and Checksums.

www.midwestmanuals.com

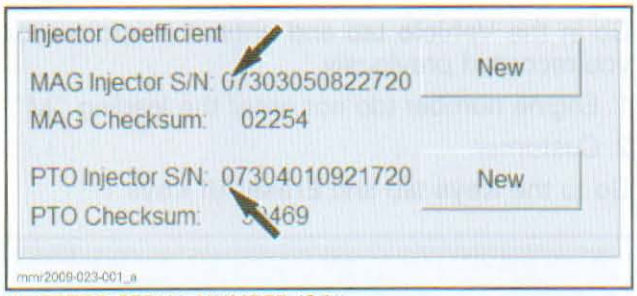

INJECTOR SERIAL NUMBER (S/N)

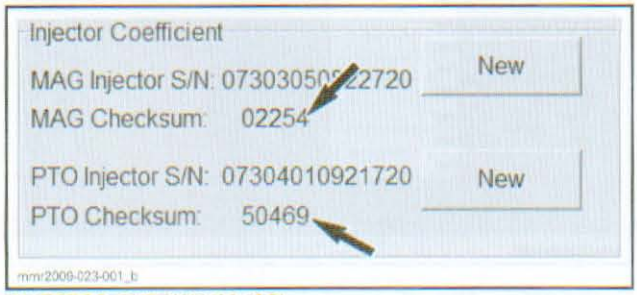

INJECTOR CHECKSUM (CS)

Enter data in ECM as detailed in *ENTERING THE COLLECTED INFORMATION INTO THE ECM.*

2nd Collecting Method: Collect the Information from the Vehicle

1. Record engine serial number.



RH SIDE OF ENGINE COMPARTMENT
1. Engine serial number

2. Record oil pump code.



BACK OF OIL PUMP
1. Oil pump code (0 to 9)

3. Record MAG/PTO injectors S/N.

Record the serial number (SN) and the checksum (CS) on the injector tag.



SN: Serial number
CS: Checksum number

Use BOSSWeb to get the matching calibration file.

Save the calibration file to your PC computer in the folder:

C:\Program Files\BRP\BUDSCommon\InjectorCoefficients.

Enter data in ECM as detailed in *ENTERING THE COLLECTED INFORMATION INTO THE ECM.*

Entering the Collected Information Into the ECM

Remove the faulty ECM.

Install and connect the new ECM.

Use B.U.D.S. to enter the data into the new ECM.

NOTE: The beeper will continuously sound a sequence of 11 beeps meaning that the DESS key is not programmed. To stop the beeps, remove key.

In B.U.D.S., click the **Read Data** button to read the new "empty" ECM.

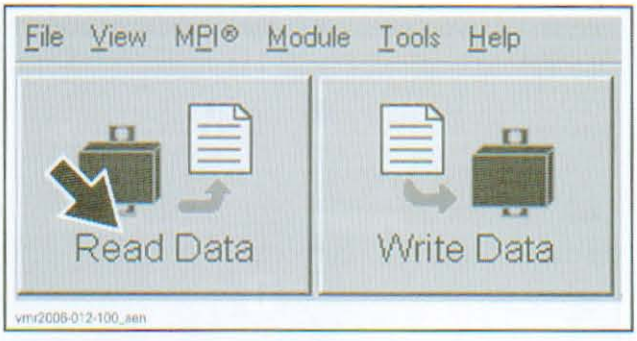

Then, a message will appear saying that the cluster (multifunction gauge) does not recognize the ECM.

www.midwestmanuals.com

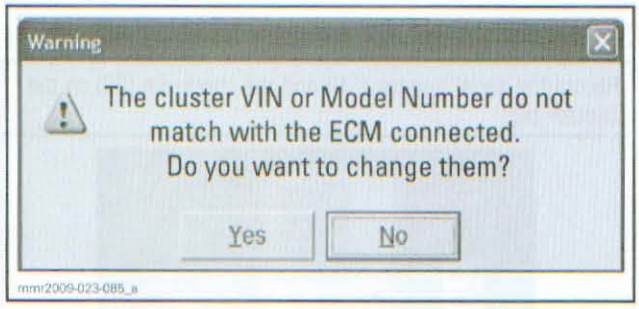

Click **Yes** to be able to match them.

NOTE: If the numbers are not matched, the gauge will stop operating within 10 seconds of engine operation. Only its DESS LED will be turned ON.

Since we replaced the ECM, its serial numbers are purposely missing as seen in B.U.D.S. Click the arrows shown to transfer the cluster numbers into the ECM.

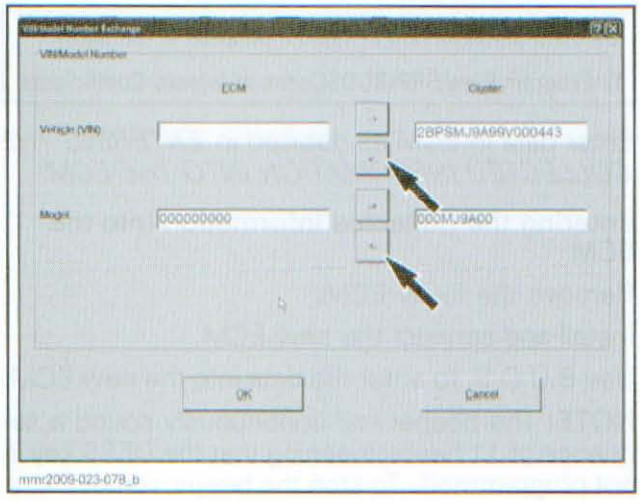

Now the information numbers between ECM and cluster properly matches.

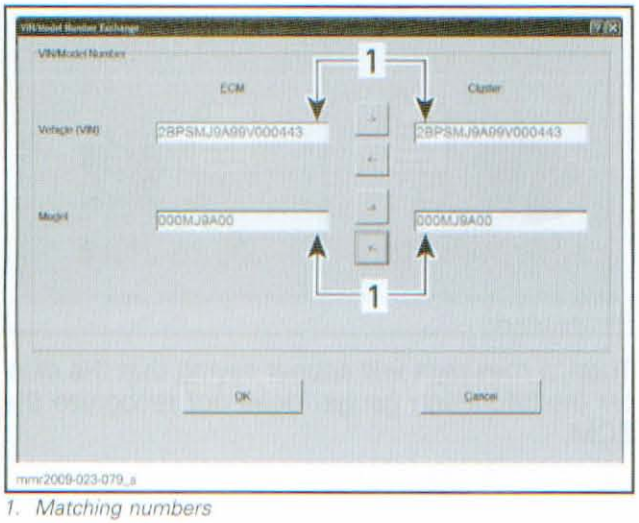

1. Matching numbers

Go in the **Vehicle** tab and enter the information you recorded previously.

1. Engine number (do not enter the leading "M")
2. Customer.

Go to the **Keys** tab and **Erase All Keys**.

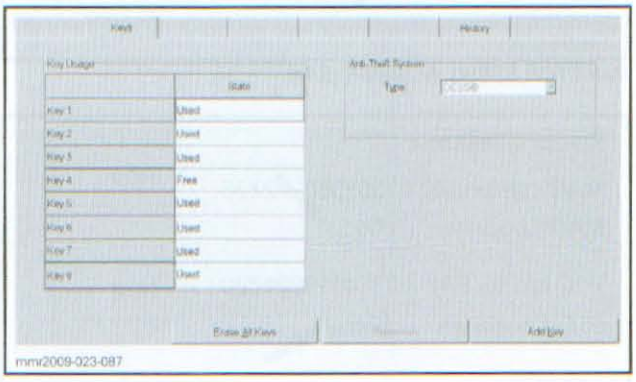

3. Program the desired key(s). Refer to *DESS SYSTEM*.

Go to the **Setting** tab and select **ECM** then do the following.

4. Reset the **Closed Throttle**. Refer to *CLOSED THROTTLE RESET (TPS)*.

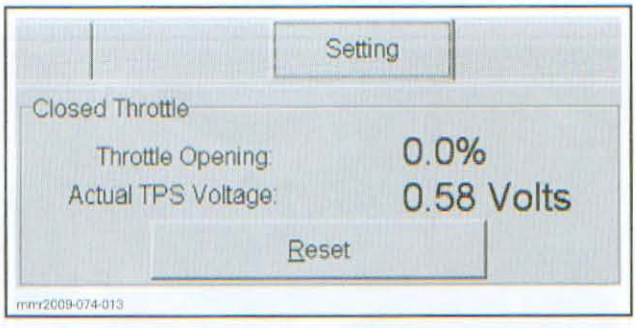

5. Carry out the complete procedure to set the **Rave Mid-Position**. Refer to *3D RAVE* section.

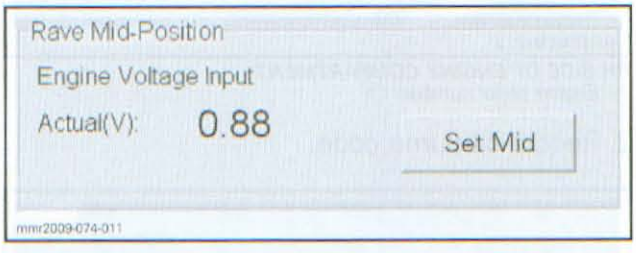

6. Set the **Ignition/Injection Timing**. Refer to *IGNITION SYSTEM*.
7. **Restart Break-In**. Click **Restart** button if the real engine hours are less than 5 hours.

www.midwestmanuals.com

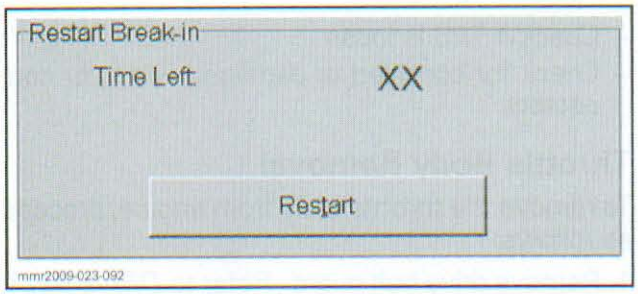

8. **Oil Compensation.** Enter the previously recorded **Oil Pump Code**.

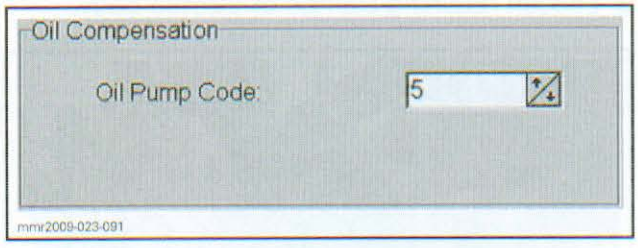

9. MAG and PTO injector S/N.
   - 9.1 If you got the data from a saved .mpem file, refer to table A.
   - 9.2 If you got the injector calibration file from BOSSWeb, refer to table B.

TABLE A (DATA FROM A SAVED .MPEM FILE)
Click on the **New** button and open the file that matches the previously recorded serial number.
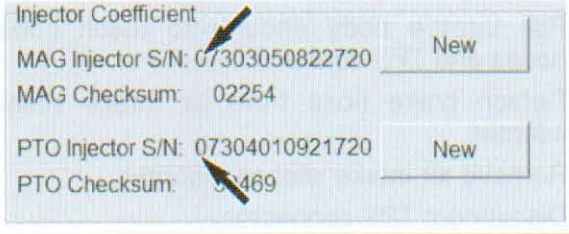
Ensure to match PTO and MAG sides.
Once the file has been read, ensure the checksum number (CS) shown in B.U.D.S. matches the CS you previously recorded.
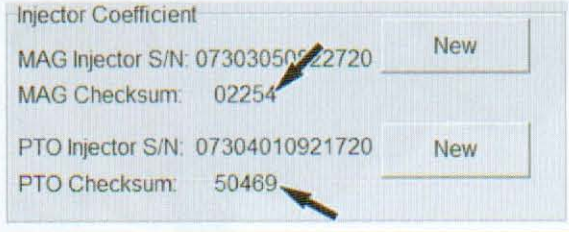
Otherwise, you read a wrong file. Read the file again until you get the appropriate file.

TABLE B (CALIBRATION FILE FROM BOSSWEB)
Click on the **New** button and open the file that you previously saved on your PC computer in the folder: C:\Program Files\BRP\BUDSCommon\InjectorCoefficient
Ensure to match PTO and MAG sides.
Once the file has been read, ensure the injector tag SN matches the S/N shown in B.U.D.S.

SN: Serial Number
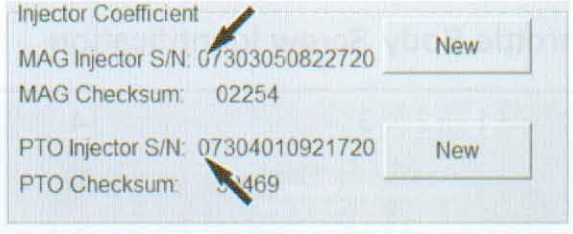
Otherwise, you read a wrong file. Read the file again until you get the appropriate file.

10. Click on the **Write Data** button.

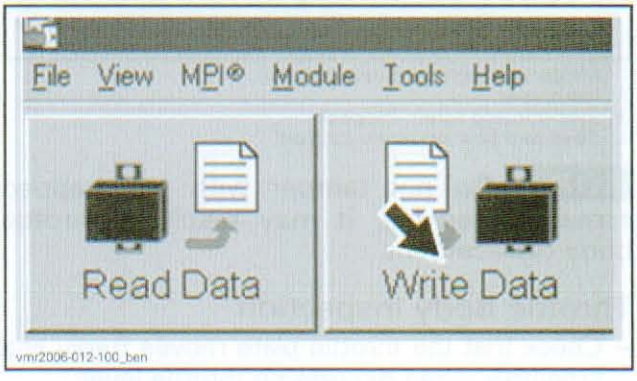

Lift rear of vehicle and safely support.

Start the engine and increase engine speed above 6000 RPM to be sure no fault appears.

www.midwestmanuals.com

Let engine idle to ensure idle is adequate.

If engine does not run as expected, ensure that the injector calibration files are valid. Check with the tag of the injectors installed on the engine.

Reinstall remaining removed parts.

THROTTLE BODY

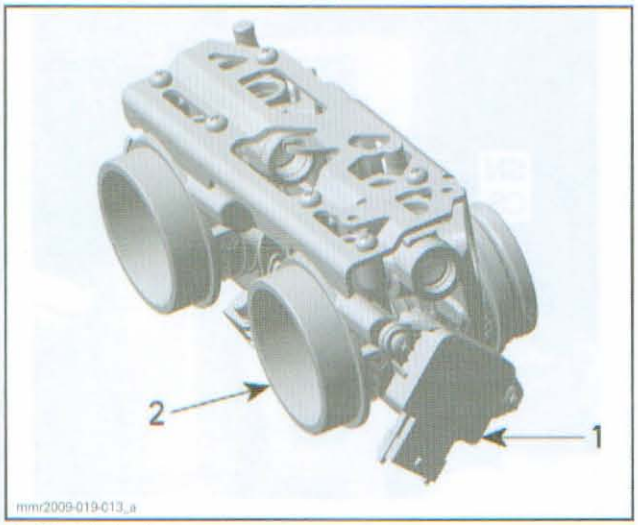

1. *Throttle body*
2. *TPS (Throttle position sensor)*

Throttle Body Screw Identification

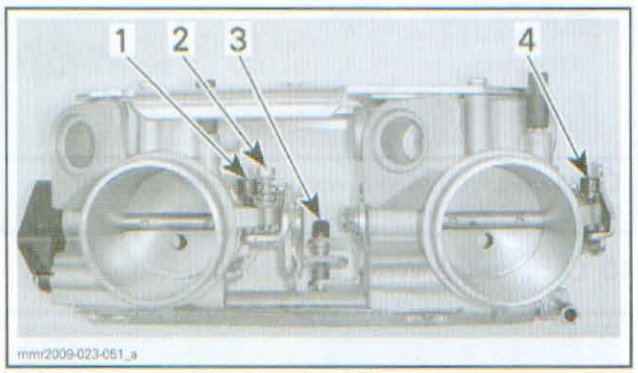

1. *Master zero position screw (capped)*
2. *Idle screw*
3. *Synchronizing screw (capped)*
4. *Slave zero position screw (capped)*

NOTICE Do not tamper with any capped screw. Otherwise, it may result in throttle body replacement.

Throttle Body Inspection

- Check that the throttle plate moves freely and smoothly when depressing throttle lever.
- Check if throttle body master zero position screw is loose. If so, replace throttle body.
- Check if TPS is loose.
- Check for corroded or damaged wiring or connectors.

Throttle Body Removal

To remove the throttle body from engine, proceed as follows:

1. Remove drive belt guard. Refer to *DRIVE BELT*.
2. Remove primary air intake silencer. Refer to *AIR INTAKE SYSTEM*.
3. Loosen retaining clamps of throttle body.

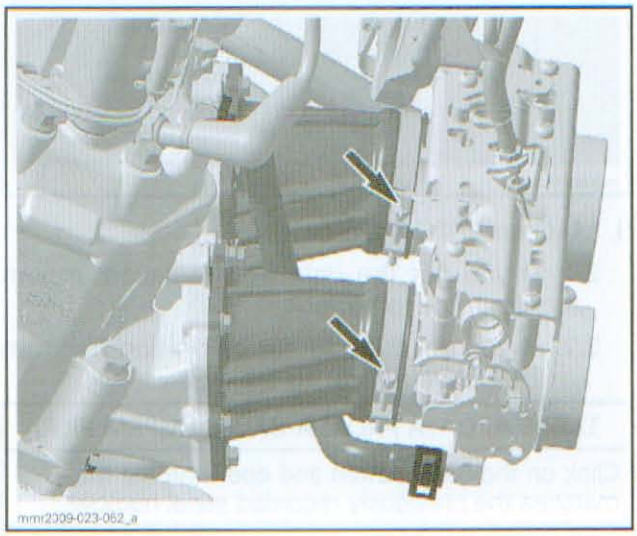

4. Pull throttle body enough to reach coolant hoses and TPS connector.
5. Detach brake hose from air intake silencer adapter.
6. Remove air intake silencer adapter.
7. Disconnect TPS connector.

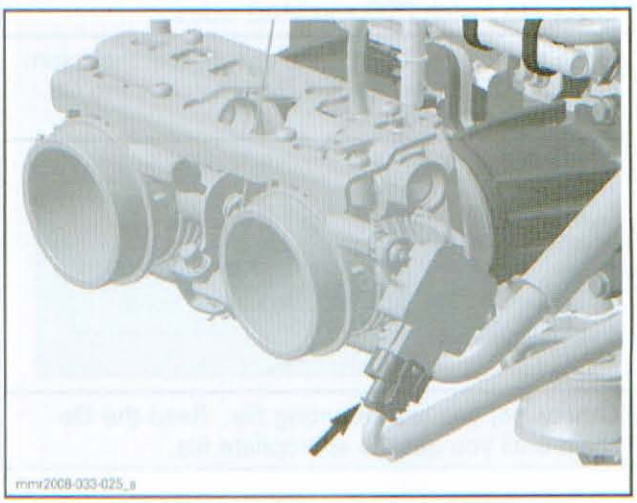

www.midwestmanuals.com

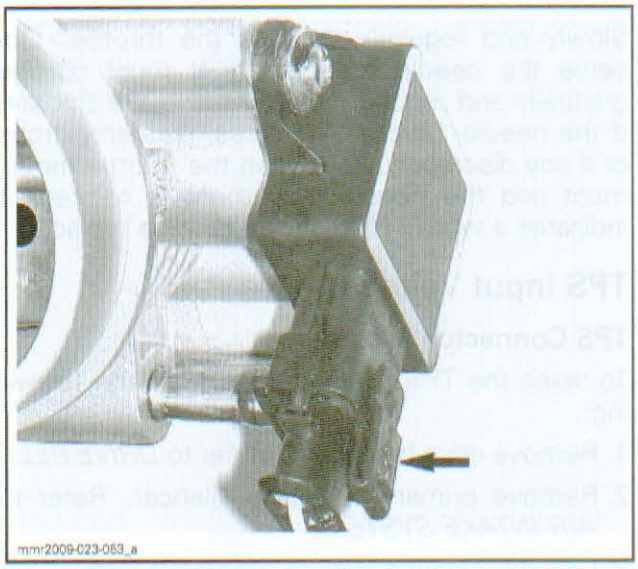

8. Install HOSE PINCHERS (P/N 295 000 076) on coolant hoses connected to throttle body.

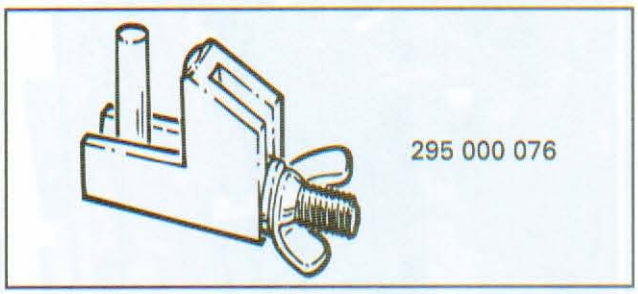

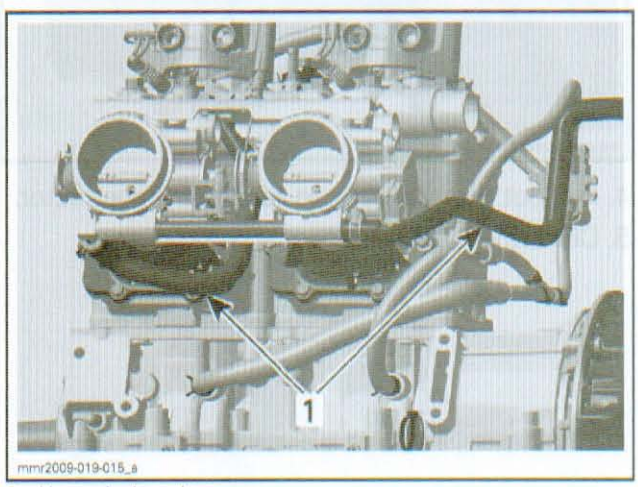

1. Hose pinchers here

9. Detach coolant hoses for throttle body.
10. Disconnect throttle cable.
11. Pull throttle body out.

Throttle Body Installation

Installation of the throttle body is the reverse of the removal procedure. Pay attention to the following details.

Before installation, clean throttle plates and bores with PULLEY FLANGE CLEANER (P/N 413 711 809).

If a new throttle body is installed, carry out the *CLOSED THROTTLE RESET (TPS)* as detailed in this section.

Refill engine coolant. If an important quantity of coolant was spilled, bleed cooling system. Refer to *COOLING SYSTEM* section.

Throttle Body Synchronization

No synchronization is required as it has already been done at the factory.

NOTICE **Do not alter setting synchronization screw. Otherwise throttle body must be replaced.**

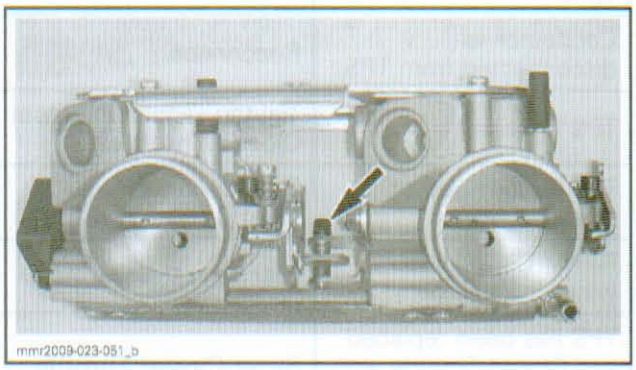

THROTTLE POSITION SENSOR (TPS)

Description

The throttle position sensor (TPS) is a potentiometer that sends a signal to the ECM which is proportional to the throttle shaft angle.

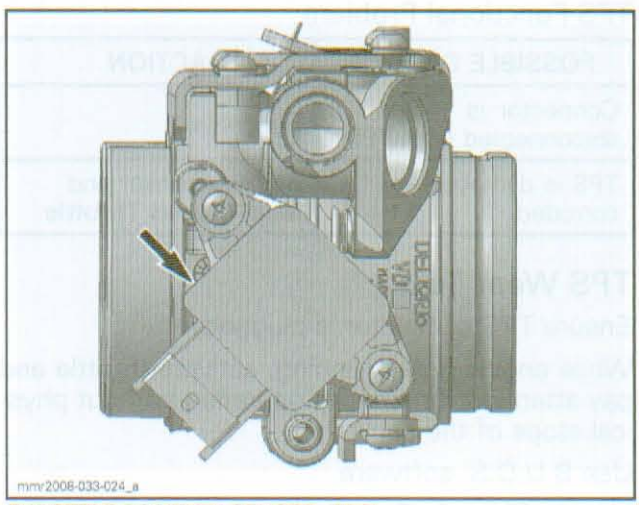

THROTTLE POSITION SENSOR (TPS)

www.midwestmanuals.com

TPS (Throttle Position Sensor) Faults

TPS Faults that are reported in B.U.D.S. fall in 2 groups; Wrong TPS voltage and TPS functional problem.

Wrong TPS Voltage

It is caused by the sensor reading going out of its allowable range. This fault can occur during the whole range of movement of the throttle.

To diagnose this fully, it is recommended to operate the throttle through its full range. It is also recommended to release the throttle quickly as this may also reveal a fault that is intermittent.

POSSIBLE CAUSE	ACTION
Throttle cable is too tight.	Adjust throttle cable.
Connector is disconnected from TPS.	Reconnect.
TPS is loose.	Tighten sensor and reset **Closed Throttle**.
TPS is damaged or corroded.	Replace sensor and reset **Closed Throttle**.
Faulty TPS-related wiring/connector.	Test and repair/replace.
TPS has been replaced and Closed Throttle was not reset.	Reset **Closed Throttle**.
Throttle body has been replaced and Closed Throttle was not reset.	Reset **Closed Throttle**.
ECM has been replaced and Closed Throttle was not reset.	Reset **Closed Throttle**.

TPS Functional Problem

POSSIBLE CAUSES	ACTION
Connector is disconnected from TPS.	Reconnect.
TPS is damaged or corroded.	Replace sensor and reset **Closed Throttle**.

TPS Wear Test

Ensure TPS connector is plugged.

While engine is not running, activate throttle and pay attention for smooth operation without physical stops of the cable.

Use B.U.D.S. software.

Use the **Throttle Opening** display under **Monitoring**.

Slowly and regularly depress the throttle. Observe the needle movement. It must change gradually and regularly as you move the throttle. If the needle "sticks", bounces, suddenly drops or if any discrepancy between the throttle movement and the needle movement is noticed, it indicates a worn TPS that needs to be replaced.

TPS Input Voltage Test

TPS Connector Access

To reach the TPS connector, perform the following:

1. Remove drive belt guard. Refer to *DRIVE BELT*.
2. Remove primary air intake silencer. Refer to *AIR INTAKE SYSTEM*.
3. Loosen retaining clamps of throttle body.

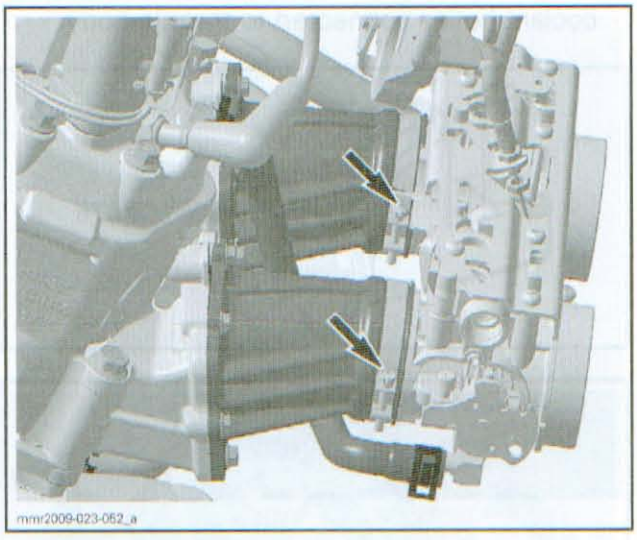

4. Pull out throttle body to reach TPS connector.
5. Disconnect TPS connector.

www.midwestmanuals.com

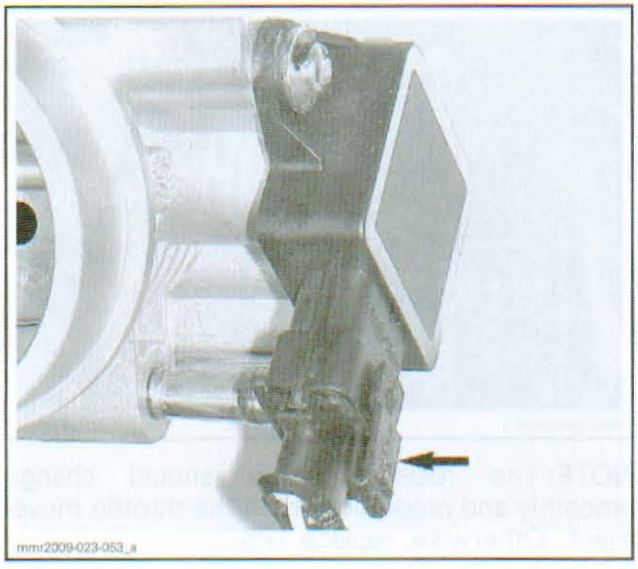
mmr2009-023-053_a

Test

Check the voltage output from ECM to the throttle position sensor.

Disconnect TPS connector.

Use the FLUKE 115 MULTIMETER (P/N 529 035 868) and set it to Vdc.

Repeatedly press the **RANGE** button until the display shows Manual Range 6.

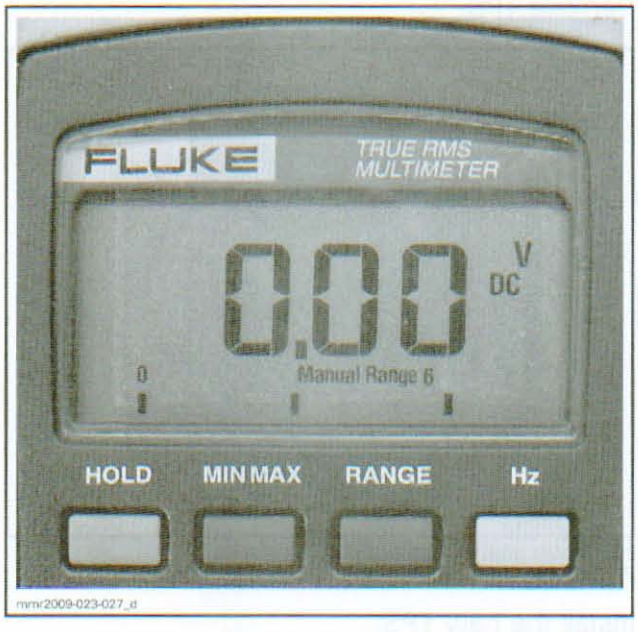

mmr2009-023-027_d

Press the **MIN MAX** button so that the display shows MIN MAX.

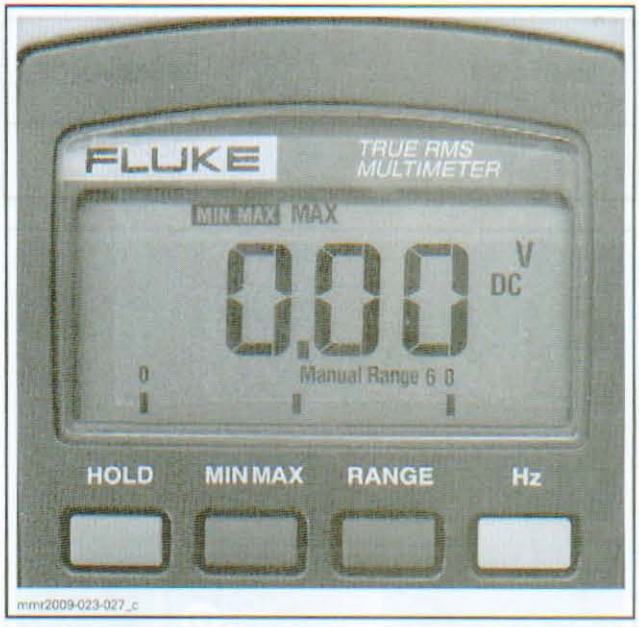

mmr2009-023-027_c

Crank engine.

Read voltage at TPS harness connector as follows.

TPS HARNESS CONNECTOR		VOLTAGE
Pin 1	Pin 2	5.0 Vdc

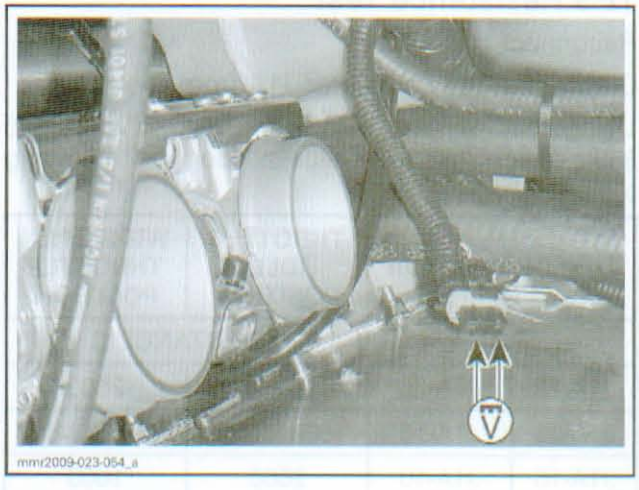
mmr2009-023-054_a

Read the MAX value.

NOTE: Reset multimeter by pressing and holding **MIN MAX** button until meter beeps.

If voltage is good, check the TPS signal wire.

TPS Signal Wire Test

Disconnect J1A connector from ECM.

Check the wiring continuity as follows.

www.midwestmanuals.com

TPS HARNESS CONNECTOR	ECM J1A CONNECTOR	RESISTANCE
Pin 3	Pin 18	Close to 0 Ω (continuity)

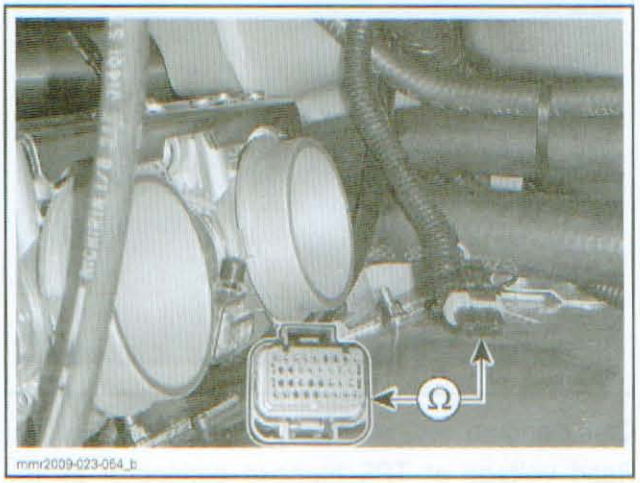

If tests are good, replace the TPS.

If tests are not good, continue to check the resistance of the rest of the TPS circuit.

TPS Resistance Test

Reconnect the TPS.

Disconnect the connector J1A from the ECM.

Using the FLUKE 115 MULTIMETER (P/N 529 035 868), check resistive value as per the following table.

ECM CONNECTOR		THROTTLE IDLE POSITION	WIDE OPEN THROTTLE POSITION
PIN		RESISTANCE Ω	
J1A-18	J1A-26	1000	2500
J1A-26	J1A-10	1600 - 2400	1600 - 2400
J1A-18	J1A-10	2500	1000

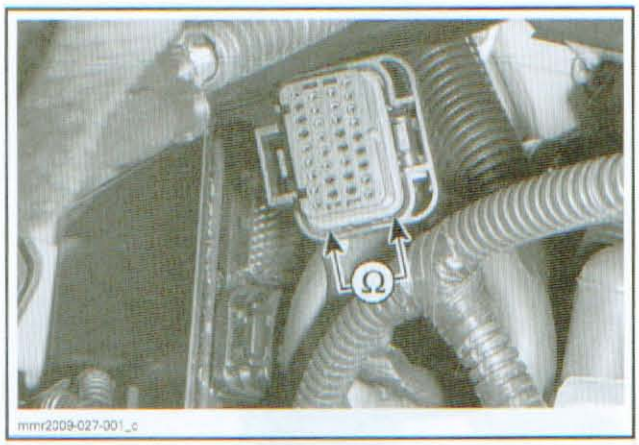

NOTE: The resistive value should change smoothly and proportionally to the throttle movement. Otherwise, replace TPS.

If resistive values are correct, try a new ECM. Refer to *ENGINE CONTROL MODULE (ECM)* elsewhere in this section.

If resistive values are incorrect, repair/replace wiring/connectors. If they are good, replace TPS.

TPS Replacement

Remove the throttle body as described above.

Loosen two screws retaining the TPS.

Remove TPS.

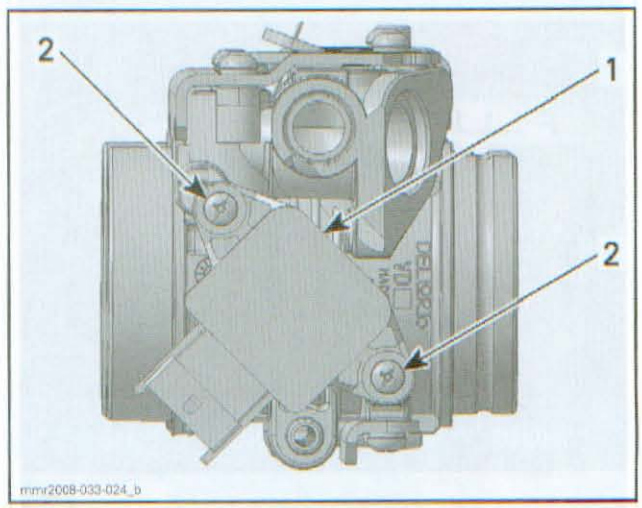

1. Throttle position sensor (TPS)
2. Screws

Install the new TPS.

Apply Loctite 243 on the TPS retaining screws, then torque to 3 N•m (27 lbf•**in**).

Reinstall remaining removed parts.

Proceed with the **Closed Throttle Reset**.

www.midwestmanuals.com

CRANKSHAFT POSITION SENSOR (CPS)

NOTE: The CPS is used for forward and reverse.

CPS Output Voltage Test

Remove muffler. Refer to *EXHAUST SYSTEM.*

Remove the acoustic panel.

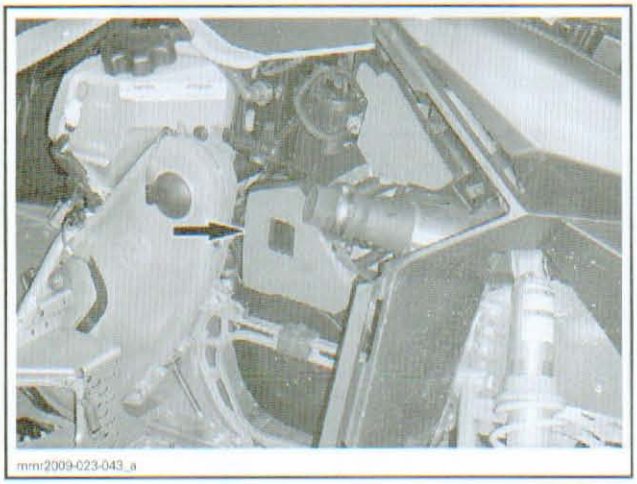

Disconnect CPS connector.

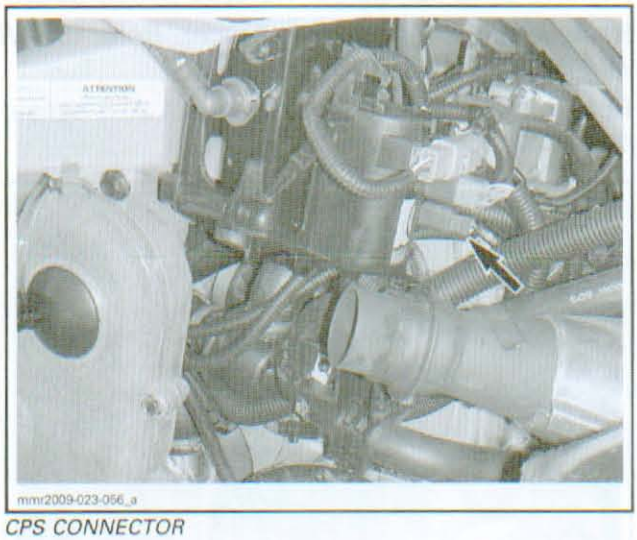

CPS CONNECTOR

Probe terminals coming from CPS while cranking engine.

CPS CONNECTOR		VOLTAGE
Pin 1	Pin 2	1 - 2 Vac min.

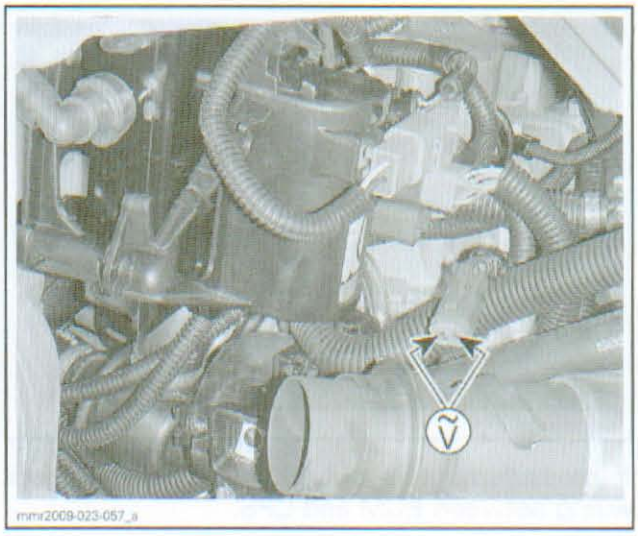

If voltage is out of specification, inspect wiring/connectors. Replace CPS if wiring is good.

CPS Resistance Test

Disconnect connector J1A from ECM.

Measure the resistance of the sensor itself.

ECM J1A CONNECTOR		RESISTANCE @ 20°C (68°F)
Pin 6	Pin 7	190 - 290 Ω

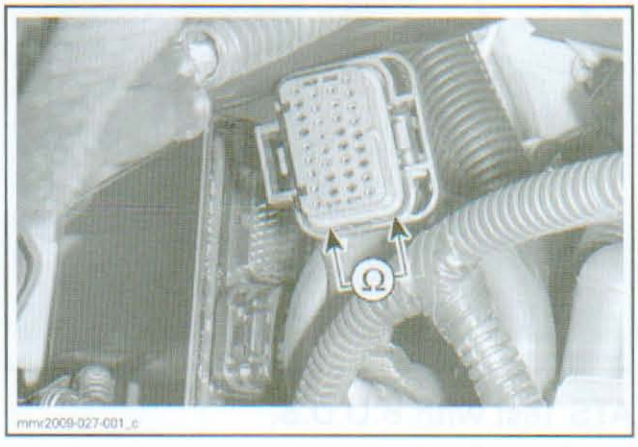

If measurement is out of specification, check wiring continuity between ECM and CPS. If continuity is good, replace CPS.

Also check for a bad ground connection as follows.

ECM J1A CONNECTOR		RESISTANCE @ 20°C (68°F)
Pin 6	Engine ground	Open circuit (OL)
Pin 7	Engine ground	

www.midwestmanuals.com

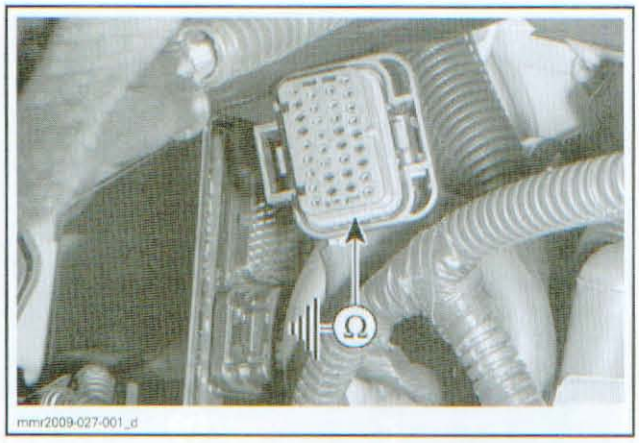

If measurement is out of specification, check wiring between ECM and CPS.

CPS Replacement

Refer to *MAGNETO SYSTEM.*

AIR TEMPERATURE SENSOR (ATS)

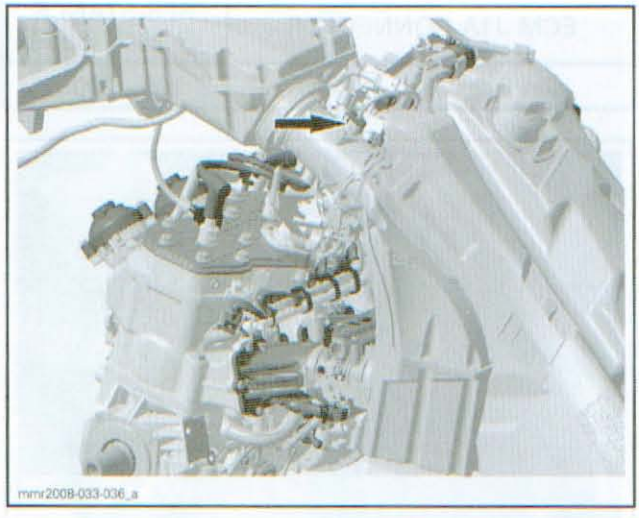

ATS Test with B.U.D.S.

Use B.U.D.S. software.

Look **Intake Air** in **Monitoring** tab of B.U.D.S. It should show the ambient temperature. Otherwise, perform the following test.

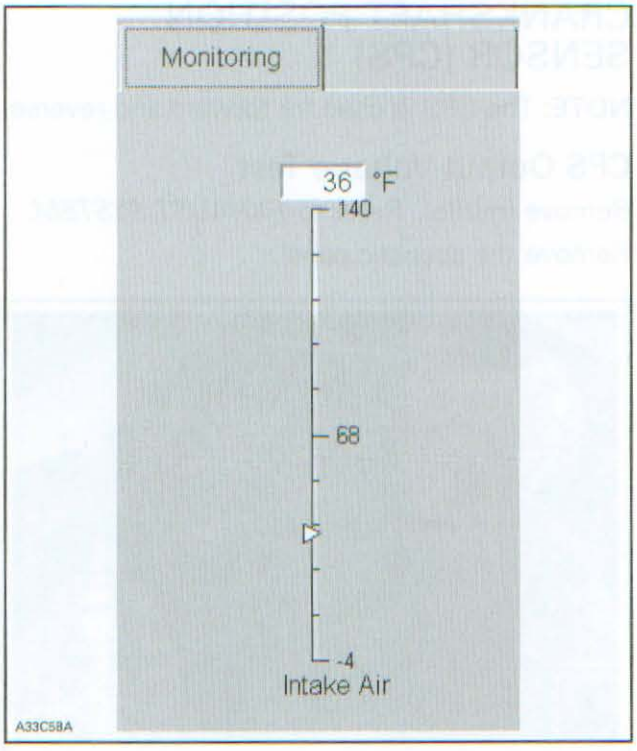

ATS Resistance Test

Remove drive belt guard. Refer to *DRIVE BELT.*

Remove primary air intake silencer. Refer to *AIR INTAKE SYSTEM.*

Rotate intake adapter to disconnect ATS sensor connector.

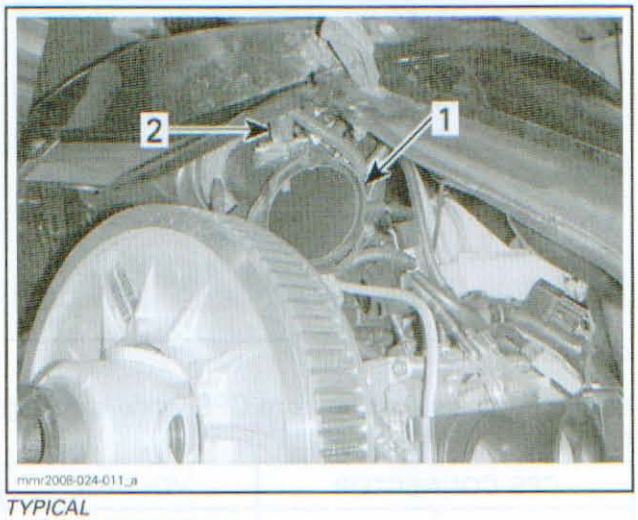

TYPICAL
1. *Rotate intake adapter*
2. *Disconnect sensor connector*

Measure sensor resistance.

IMPORTANT: Move wiring harness close to the sensor while measuring the resistance. If resistance varies as harness is moved, check sensor connections.

www.midwestmanuals.com

ATS		MEASUREMENT
Pin 1	Pin 2	Refer to *SENSOR TEMPERATURE TABLE* below

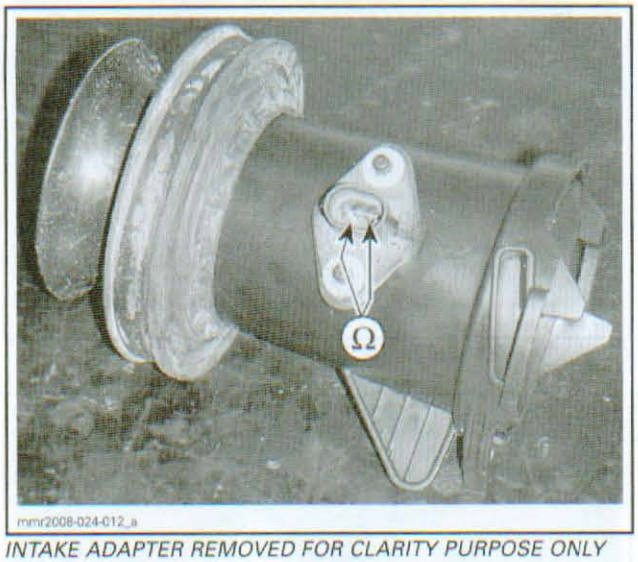

INTAKE ADAPTER REMOVED FOR CLARITY PURPOSE ONLY

SENSOR TEMPERATURE TABLE		
TEMPERATURE		RESISTANCE (ohms)
°C	°F	ATS
- 40	- 40	43610
- 30	- 22	25090
- 20	- 4	14900
- 10	14	9102
0	32	5705
10	50	3680
20	68	2436
25	77	2000
30	86	1651
40	104	1144
50	122	808
60	140	580
70	158	424
80	176	316
90	194	238
100	212	182
110	230	141
120	248	111
130	266	88

SENSOR TEMPERATURE TABLE		
TEMPERATURE		RESISTANCE (ohms)
°C	°F	ATS
140	284	70
150	302	57
160	320	47
170	338	39
180	356	32
190	374	27
200	392	23

If resistance is out of specifications, replace sensor.

If resistance tests good, reconnect the ATS and disconnect the J1A connector from ECM connector.

Using the FLUKE 115 MULTIMETER (P/N 529 035 868), measure resistance value as follows.

J1A CONNECTOR		MEASUREMENT
Pin J1A-20	Pin J1A-27	Refer to *SENSOR TEMPERATURE TABLE* above

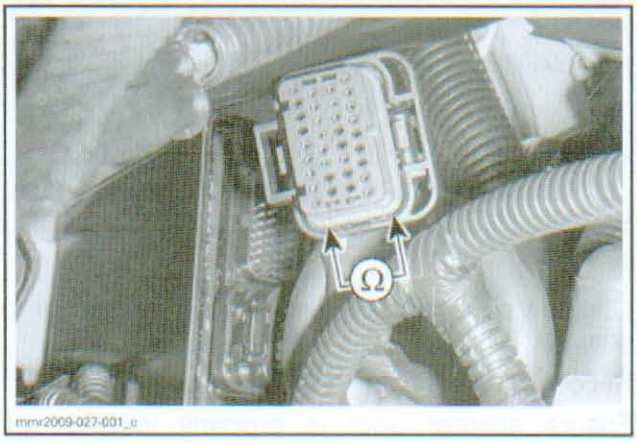

If resistance value is incorrect, repair the connectors or replace the wiring harness between ECM connector and the ATS.

Reinstall removed parts. Ensure intake adapter boot is properly installed on the adapter. See below in *ATS REPLACEMENT*.

ATS Replacement

See procedures above to reach sensor.

Loosen boot clamp.

www.midwestmanuals.com

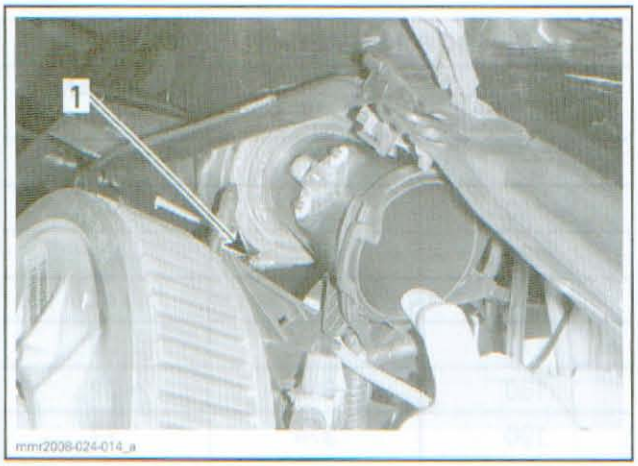

1. Boot clamp

Unplug ATS connector.

Pull out intake adapter.

Remove sensor push nuts.

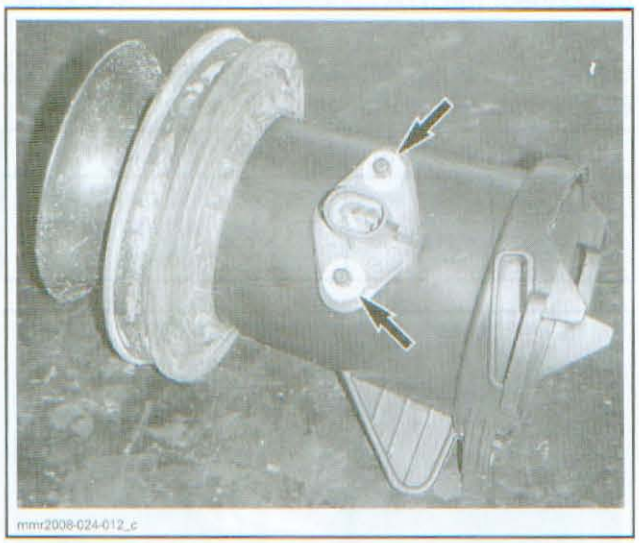

Pull out sensor.

Use new push nuts and secure the new sensor to adapter.

Reconnect ATS.

Ensure adapter boot is properly installed as shown.

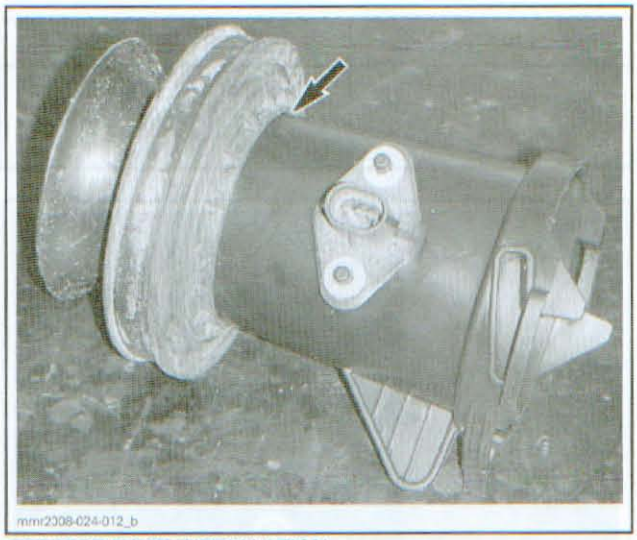

CORRECT BOOT INSTALLATION

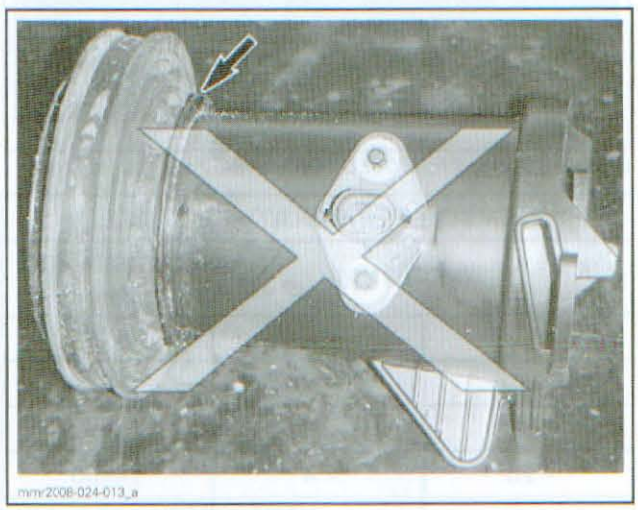

WRONG BOOT INSTALLATION

Reinstall removed parts.

COOLANT TEMPERATURE SENSOR (CTS)

CTS Test with B.U.D.S.

Use B.U.D.S. software.

Look engine temperature in **Monitoring** tab of B.U.D.S. It should show the coolant temperature. Otherwise, perform the following test.

www.midwestmanuals.com

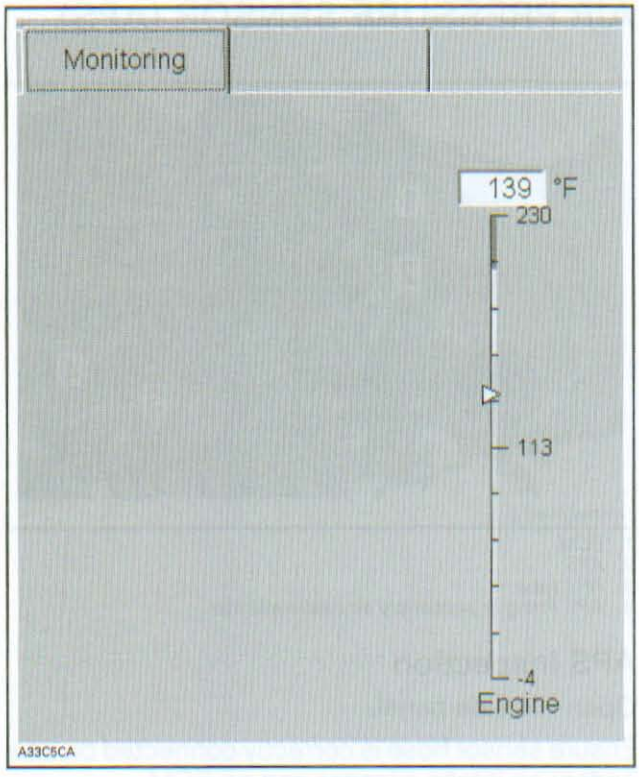

CTS Resistance Test

Remove drive belt guard. Refer to *DRIVE BELT*.

Remove primary air intake silencer. Refer to *AIR INTAKE SYSTEM*.

Disconnect CTS sensor connector.



Use the FLUKE 115 MULTIMETER (P/N 529 035 868) and set it to Ω.

Measure resistance between sensor terminals.

CTS		MEASUREMENT
Pin 1	Pin 2	Refer to *SENSOR TEMPERATURE TABLE* below

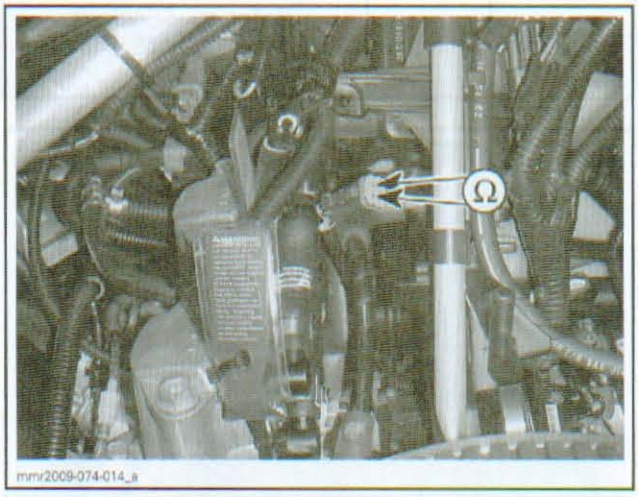

SENSOR TEMPERATURE TABLE

TEMPERATURE		RESISTANCE (ohms)
°C	°F	CTS
- 40	- 40	72412
- 30	- 22	38681
- 20	- 4	21529
- 10	14	12431
0	32	7418
10	50	4582
20	68	2919
30	86	1912
40	104	1284
50	122	883
60	140	622
70	158	448
80	176	328
90	194	245
100	212	186
110	230	143
120	248	112
130	266	88
135	275	79
140	284	71
145	293	64
150	302	57

If resistance is out of specifications, replace CTS.

www.midwestmanuals.com

If resistance tests good, reconnect the CTS.

Disconnect the J1A connector from ECM.

Measure resistance as follows.

J1A CONNECTOR		MEASUREMENT
Pin 19	Pin 27	Refer to *SENSOR TEMPERATURE TABLE* above

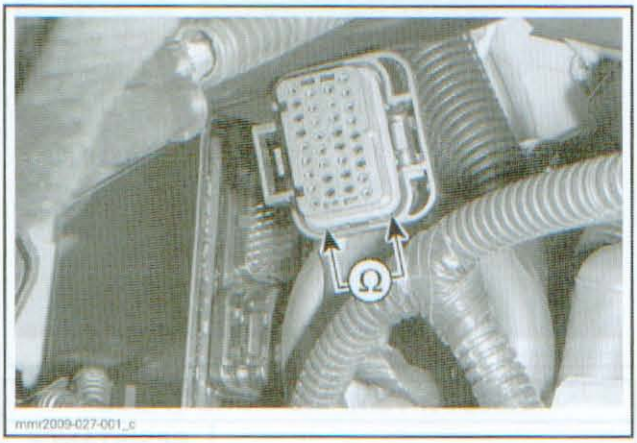

If resistance value is correct, sensor and wiring/connectors are good.

If resistance value is incorrect, repair/replace wiring/connectors between ECM and CTS.

CTS Replacement

Remove drive belt guard. Refer to *DRIVE BELT* section.

Lift rear of vehicle to minimize coolant spillage.

Disconnect CTS connector.

Remove CTS.

Install the new CTS and torque to 12 N•m (106 lbf•**in**).

Reinstall removed parts.

Refill engine coolant. If an important quantity of coolant spilled, bleed cooling system. Refer to *COOLING SYSTEM* section.

AIR PRESSURE SENSOR (APS)

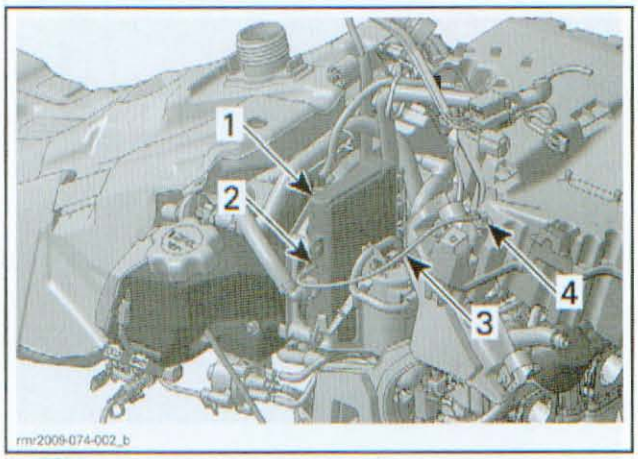

1. *ECM*
2. *APS*
3. *APS tube*
4. *APS fitting in secondary air intake silencer*

APS Inspection

Open RH side panel.

Ensure sensor hose is correctly connected on secondary air intake silencer and on ECM.

Check hose for cleanliness, water, ice. Ensure it is not bent, kinked or burnt.

Connect B.U.D.S. Refer to *COMMUNICATION TOOLS/B.U.D.S. SOFTWARE*.

Use the B.U.D.S. software and look in **Monitoring** tab.

At sea level, atmosphic pressure gauge should read around 101.3 kPa (14.7 PSI) and less as altitude increases.

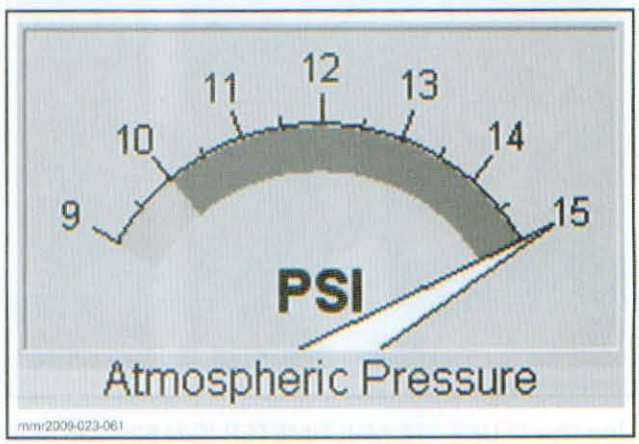

Otherwise, replace ECM.

www.midwestmanuals.com

EXHAUST GAS TEMPERATURE SENSOR (EGTS)

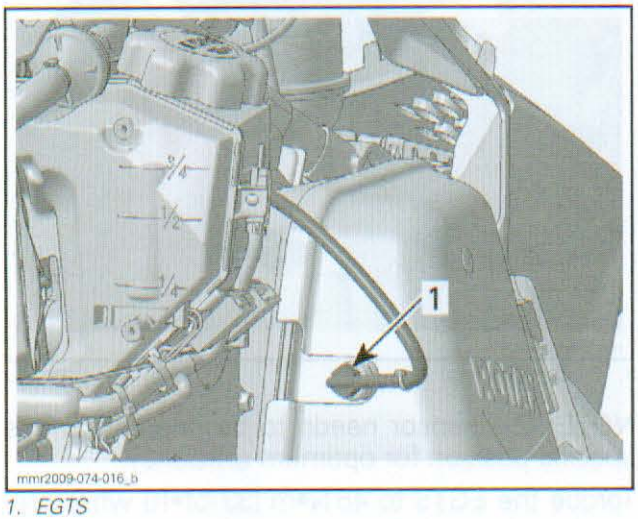

1. EGTS

EGTS Resistance Test

Disconnect EGTS connector.

Measure sensor resistance.

EGTS		MEASUREMENT
Pin 1	Pin 2	Refer to *SENSOR TEMPERATURE TABLE* below

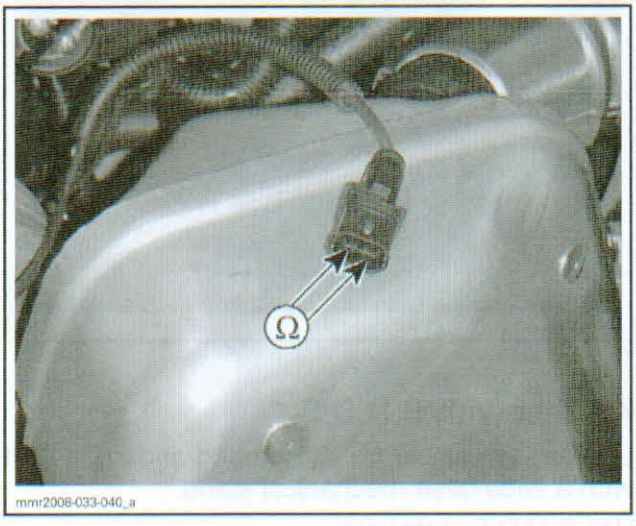

SENSOR TEMPERATURE TABLE		
TEMPERATURE		RESISTANCE (ohms)
°C	°F	EGTS
- 40	- 40	170
- 20	- 4	185
0	32	201
25	77	220
50	122	239
100	212	276
150	302	313
200	392	349
250	482	385
300	572	420
350	662	454
400	752	488
450	842	521
500	932	554
600	1112	618
700	1292	679
800	1472	738
900	1652	795
1000	1832	849

If resistance is out of specification, replace the sensor.

If resistance is as per specification, reconnect the EGTS.

Disconnect the J1A connector from ECM.

Measure resistance as follows.

J1A CONNECTOR		MEASUREMENT
Pin 12	Pin 27	Refer to *SENSOR TEMPERATURE TABLE* above

www.midwestmanuals.com

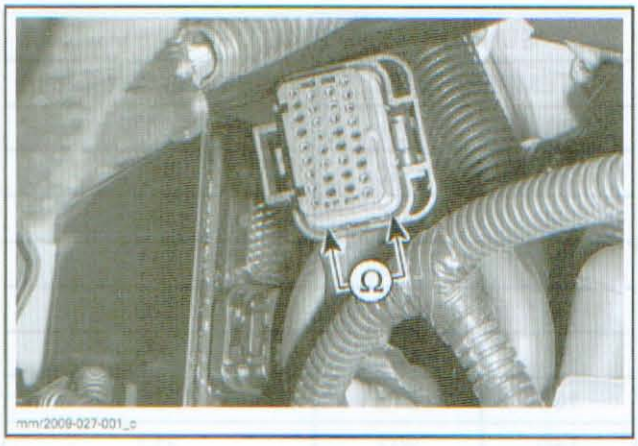

If resistive value is correct, try a new ECM. Refer to *ENGINE CONTROL MODULE (ECM)* elsewhere in this section.

If resistive value is incorrect, repair the connector or replace the wiring harness between ECM connector and the EGTS.

EGTS Removal

Disconnect EGTS connector.

Remove muffler. Refer to *EXHAUST SYSTEM.*

Remove EGTS.

EGTS Installation

NOTE: New sensors have paraffin wax on their tip to protect the sensor during shipping. Paraffin will melt at first engine operation.

NOTICE **Do not drop or use a sensor that has been dropped. Do not use an impact wrench to install sensor.**

Apply ANTI-SEIZE LUBRICANT (P/N 293 800 070) over the EGTS threads to prevent possible seizure.

Install sensor and turn it so that it is positioned horizontally.

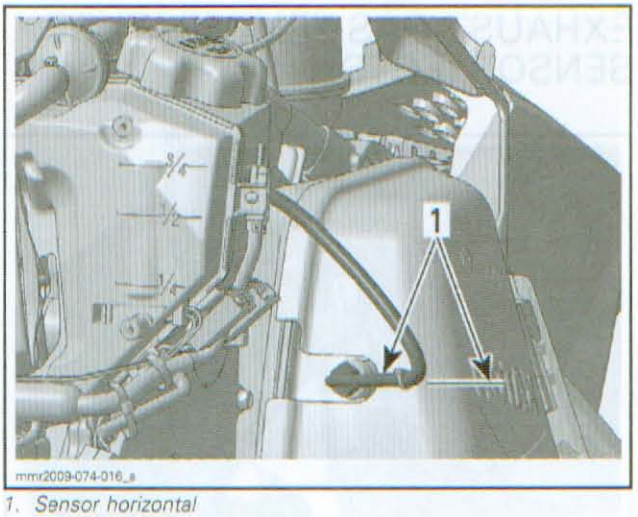

1. Sensor horizontal

NOTE: The sensor needs to be oriented in this specific position for optimum efficiency.

Torque the EGTS to 45 N•m (33 lbf•ft) while preventing sensor to turn.

Install remaining components.

KNOCK SENSOR (KS)

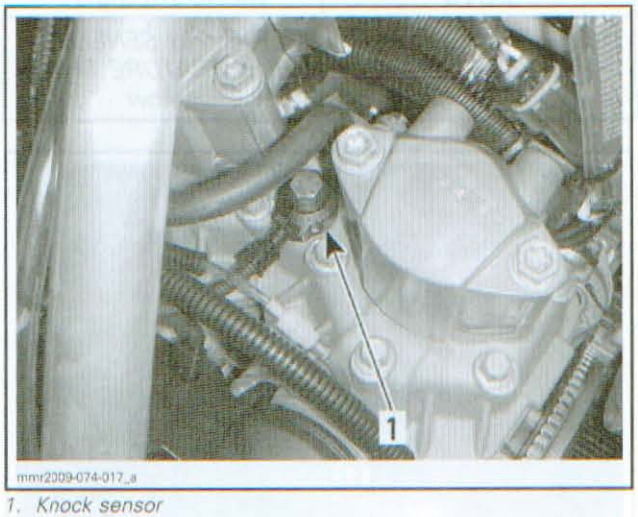

1. Knock sensor

KS Test with B.U.D.S.

Lift rear of vehicle off the ground and support it with a wide-base mechanical stand.

Use B.U.D.S. software.

Monitor the knock sensor using the **Knock Sensor Signal** in **Monitoring** section in B.U.D.S.

www.midwestmanuals.com

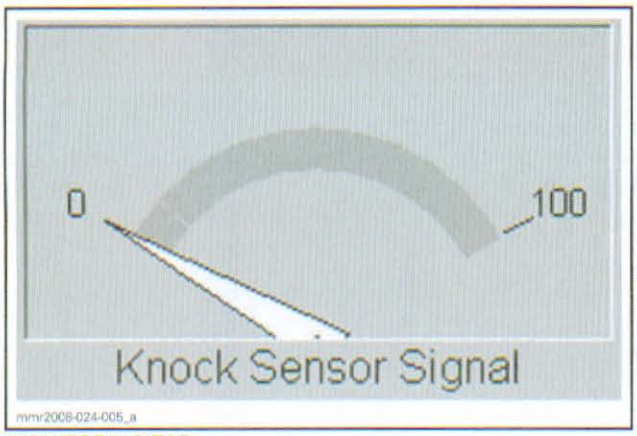

MONITORING TAB

Start the engine.

Bring engine speed above 5200 RPM and vary engine RPM above 5200 RPM.

Needle of knock sensor signal should move between 0 and 100. The needle movement pattern is of no importance as long as it moves indicating the engine vibrations the knock sensor senses. If needle sticks either to 0 or 100, there is a problem.

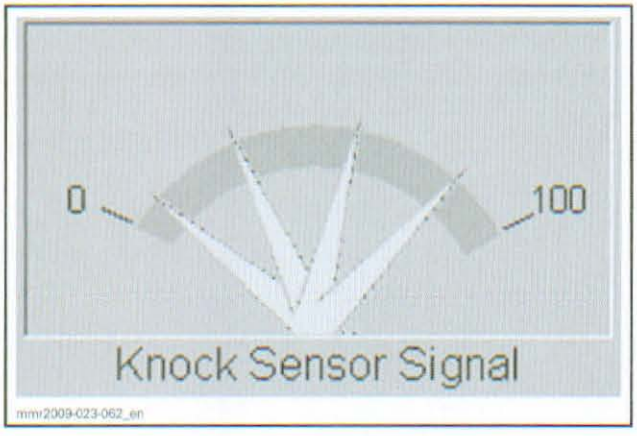

If needle moves as described, the knock sensor should be good.

NOTE: Ensure ignition coil cables are not close to knock sensor harness. This might generate a false fault code.

Verify knock sensor circuit as follows.

KS Circuit Continuity Test

Ensure sensor and head contact surfaces are clean and mounting bolt and washer are correct and properly torqued down.

Disconnect knock sensor connector. Refer to *KNOCK SENSOR REPLACEMENT.*

Disconnect J1A connector from ECM.

Check wire continuity of circuit as per following table.

J1A CONNECTOR	KS CONNECTOR	MEASUREMENT
J1A-34	Pin 1	Close to 0 Ω (continuity)
J1A-33	Pin 2	

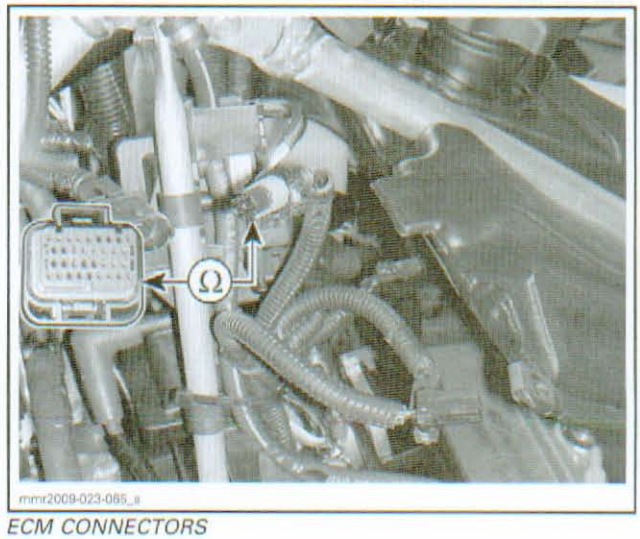

ECM CONNECTORS

If test is not good, repair/replace wiring/connectors between ECM and knock sensor.

If test is good, try a new knock sensor.

KS Replacement

Unscrew and remove knock sensor from cylinder head.

Remove drive belt guard. Refer to *DRIVE BELT.*

Remove primary air intake silencer. Refer to *AIR INTAKE SYSTEM.*

Unplug knock sensor connector above ATS.

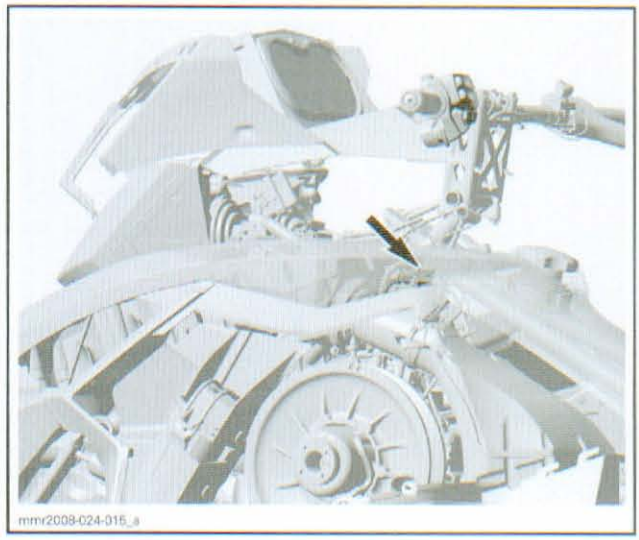

www.midwestmanuals.com

Clean contact surface, then install the new knock sensor.

Torque screw to 29 N•m (21 lbf•ft).

NOTICE Improper torque might prevent sensor to work properly and lead engine to severe damage of internal components.

Reconnect connector.

Reinstall remaining parts.



www.midwestmanuals.com

IGNITION SYSTEM

SERVICE TOOLS

Description	Part Number	Page
12 VOLTS BATTERY SUPPLY CABLE	529 035 997	338
DIAL INDICATOR ADAPTER KIT	529 036 132	322
DIGITAL INDUCTIVE TYPE TACHOMETER	529 014 500	324
FLUKE 115 MULTIMETER	529 035 868	332, 336
IGNITION TIMING TOOL	529 036 129	321
SUPPLY CABLE	529 035 997	344
SUPPLY HARNESS	529 035 869	344
T-HARNESS	529 035 869	337
TDC GAUGE	295 000 143	322

SERVICE PRODUCTS

Description	Part Number	Page
DIELECTRIC GREASE	293 550 004	330–331
LOCTITE 767 (ANTISEIZE LUBRICANT)	293 800 070	330

GENERAL

⚠ WARNING

Always electrically disconnect both fuel injectors prior to testing for ignition spark. Otherwise, fuel vapors may ignite in presence of a spark creating a fire hazard.

SYSTEM DESCRIPTION (500SS/600/800R)

A CDI ignition system is used.

The ECM sends the current to the primary winding of a dual ignition coil which provides a separate high voltage output to each spark plug.

The ECM is programmed for optimum ignition timing under all operating conditions. Using operating conditions provided by a variaty of sensors, the ECM controls the ignition timing for optimum engine operation.

The ECM will limit the maximum engine speed to approximately 8600 RPM.

SYSTEM DESCRIPTION (600 HO E-TEC)

This ignition system is an inductive type specifically designed for the E-TEC engine with a rapid rise time to prevent spark plug fouling. It provides a quick spark similar to a CDI system but with a longer duration.

The ignition system is fully managed by the ECM which controls the ignition system parameters such as spark timing, dwell time, and firing order.

The system uses two separate ignition coils which induce voltage to a high level in their secondary winding to produce a spark at each spark plug independently.

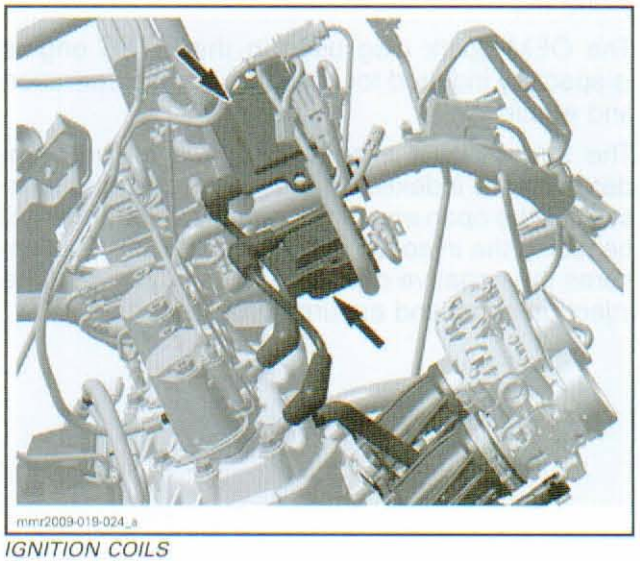

IGNITION COILS

The ignition coils receive power from the 55 Vdc system . Their operating voltage varies from 30 to 55 Vdc.

www.midwestmanuals.com

Ignition System Basic Operation

A 3-wire connector is connected to the primary winding of each coil.

The ECM energizes the primary winding of each coil through pin 3. Pin 1 is connected to a ground circuit.

At the appropriate time, the ECM sends a trigger signal of approximately 14 Vdc to pin 2 of each ignition coil. This switches ON the primary winding that is fed by 55 Vdc, for the dwell time.

The ECM will then switch the primary winding off. This produces a high voltage discharge from the secondary winding to the spark plug.

A resistive core spark plug cable is used to prevent the RFI (Radio Frequency Interference). There is no resistor in the spark plug cap.

Spark Plugs

A new platinum NGK PZFR6F spark plug is used, one per cylinder.



It has an expected life of approximately 10 000 km (6000 mi).

The OEM spark plug used in the E-TEC engine is specially indexed for optimum engine operation and efficiency.

The threads on the spark plug and in the cylinder head are indexed so that when the plug is installed, the open end of the negative electrode will be facing the injection spray, within ± 90°.This ensures the negative electrode does not deviate the injection spray and ensures proper ignition.

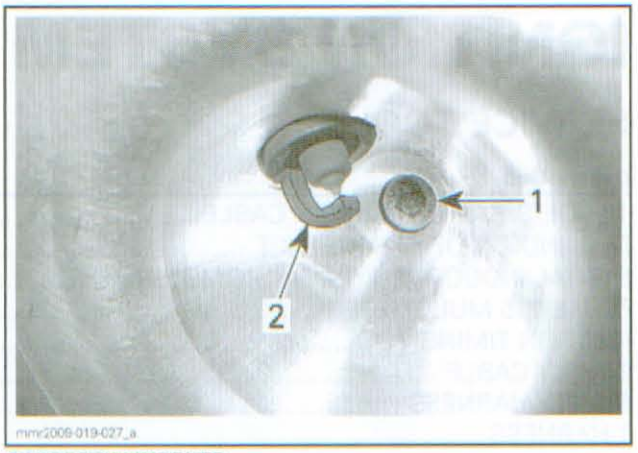

CORRECTLY INDEXED
1. *Injector nozzle*
2. *Ground electrode*

NOTE: Using an incorrectly indexed spark plug will result in poor idle and increased emissions.

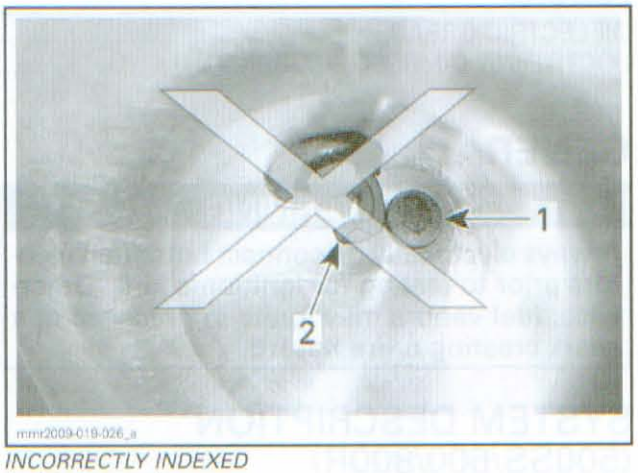

INCORRECTLY INDEXED
1. *Injector nozzle*
2. *Ground electrode*

If using a non OEM spark plug, a specific installation procedure must be followed. Refer to *SPARK PLUG INSTALLATION (600 HO E-TEC)* in this section.

Ignition Timing

The crankshaft position sensor (CPS), the air pressure sensor (APS) and the throttle position sensor (TPS) are the primary sensors used to control the ignition timing.

The ECM is programmed with data (ignition mappings). Using engine operating parameters provided by the sensors, the ECM controls the ignition timing for optimum engine operation under all operating conditions.

Ignition timing can be adjusted using the B.U.D.S. software.

www.midwestmanuals.com

Knock Detection

A knock sensor is mounted on top of the cylinder head. It detects specific vibration that would be typically generated by engine detonation.

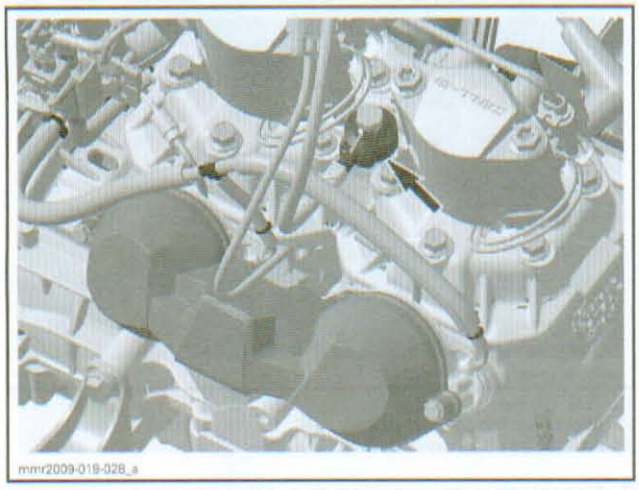

If detonation occurs, the ECMs retards the ignition advance and extends the injection period temporarily (it goes into a specific operating mode) until detonation stops.

ADJUSTMENT

IGNITION TIMING

Normally, ignition timing adjustments should not be required. It has been set at the factory and should remain correctly adjusted as every component is fixed and non adjustable.

The only time the ignition timing may require adjustment is when replacing the crankshaft, the magneto flywheel, a trigger coil (500SS/600/800R) or CPS (600 HO E-TEC), or the ECM.

If the ignition timing is found incorrect, first check for proper crankshaft alignment. This might be an indication of a twisted crankshaft. Refer to *ENGINE MEASUREMENT* section.

Ignition Timing Tool Installation

⚠ WARNING

Ensure tether cord is removed from DESS post and engine stop switch is in the STOP position.

1. Remove the LH front engine mounting screw.

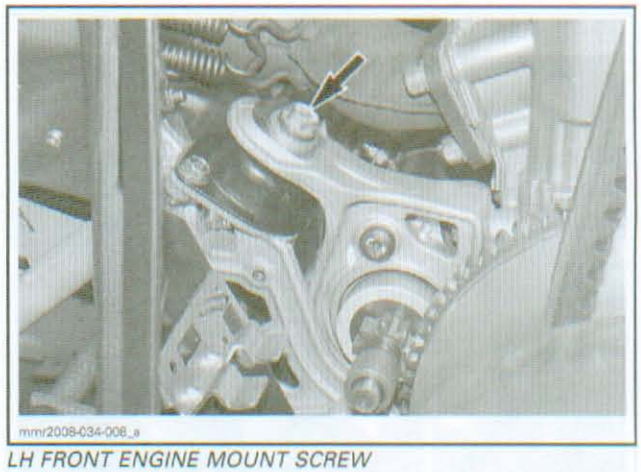

LH FRONT ENGINE MOUNT SCREW

NOTE: Note position of washers for installation.

2. Install the IGNITION TIMING TOOL (P/N 529 036 129) on the LH front engine mount and torque mounting bolt to 25 N•m (18 lbf•ft).

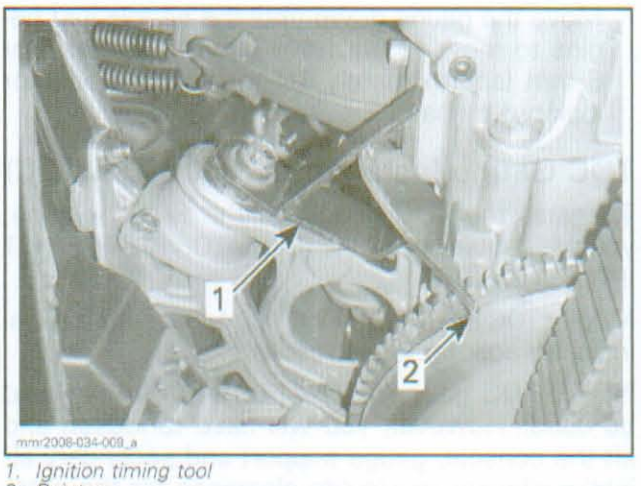

1. *Ignition timing tool*
2. *Pointer*

TDC Gauge Installation (500SS/600/800R)

⚠ WARNING

Ensure tether cord is removed from DESS post and engine stop switch is in the STOP position.

1. Clean the area around the MAG spark plug, and remove it.
2. Position the MAG piston at approximately TDC.
3. Assemble the gauge onto the adaptor and tighten the roller lock nut. Do not tighten the adaptor lock nut.
4. Screw the adaptor and TDC gauge in the spark plug hole and tighten to prevent movement of the adapter in the plug hole.

www.midwestmanuals.com

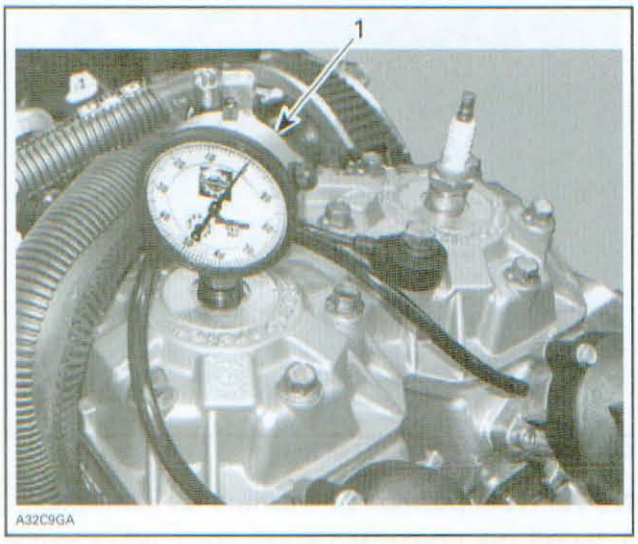

TYPICAL
1. TDC gauge on MAG side

5. Position the dial face towards the PTO side. Move the gauge down until the needle just begins to move, then move down a further 5 or 6 mm (approximately 1/4 in). Tighten adaptor lock nut by hand.

TDC Gauge Installation (600 HO E-TEC)

To install the TDC gauge on the E-TEC engine, you will require the DIAL INDICATOR ADAPTER KIT (P/N 529 036 132).

Modify TDC GAUGE (P/N 295 000 143) using the dial indicator adapter kit as follows.

NOTE: TDC gauge (P/N 414 104 700) can also be used. However, you will have to loosen and lift the console, gauge support and secondary air intake silencer to provide clearance for the extra length of the stem adapter.

⚠ WARNING

Ensure tether cord is removed from DESS post and engine stop switch is in the STOP position.

1. Remove the roller tip from the TDC gauge.
2. Install the long reach contact extension (30 mm), and the rounded tip from the DIAL INDICATOR ADAPTER KIT (P/N 529 036 132) onto the TDC gauge.
3. Remove the PTO injector, refer to *E-TEC DIRECT INJECTION* section.
4. Install the adapter plate from the DIAL INDICATOR ADAPTER KIT (P/N 529 036 132) over the PTO injector hole using Allen socket screws M10 x 1.5 x 35. Tighten screws snug fit.
5. Carefully insert the TDC gauge through the dial indicator adapter hole and into the cylinder.

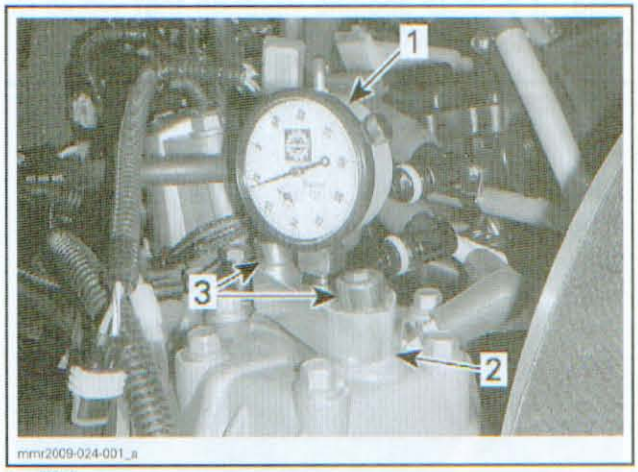

1. TDC gauge
2. Dial indicator adapter plate
3. Allen socket screws M10 x 1.5 x 35

6. Screw the gauge into the adapter plate with the dial face towards the PTO and tighten it enough to prevent movement.

Locating Piston TDC

NOTE: Normal engine rotation as seen from the PTO side is counterclockwise.

1. With a firm hold on the drive pulley, slowly rotate the drive pulley counterclockwise while observing the TDC gauge needle.

NOTE: Note that the needle stops moving only as the piston is changing direction at the top of its stroke.

2. Rotate the dial face so the "0" is in line with the needle when it stops moving.
3. Resume rotating the engine in the same direction (counterclockwise) until the gauge needle has rotated approximately 1/4 turn past TDC.
4. Then slowly rotate the engine in a clockwise direction until needle stops moving.

NOTE: The needle should stop on the "0". If not, reset the dial "0" to the needle.

5. Again, slowly rotate the drive pulley back and forth across TDC and confirm the needle always stops exactly at "0" before changing direction. "0" now indicates exact TDC.
6. Lock the dial face with the dial lock screw.

NOTE: If a difference in "0" setting the dial in each direction of rotation is easily noticeable, the engine components may suffer from excessive wear. The engine may require further inspection and maintenance.

www.midwestmanuals.com

Scribing the Timing Mark

1. From the "0" (TDC), rotate the drive pulley clockwise (backwards engine rotation) until the dial needle rotates one-quarter turn past the required BTDC measurement (see table below).
2. Then carefully rotate it counterclockwise (forwards engine rotation) until the needle indicates precisely the measurement as specified in the following table.

NOTE: Always rotate the engine backwards (clockwise) past the specified BTDC, then forwards to the exact specified BTDC. Final setting must always be made in the normal engine rotation.

IGNITION TIMING BTDC		
ENGINE	MEASUREMENT BTDC	DEGREE SETTING BTDC
500SS/600	2.49 mm (.098 in)	20°
600 HO E-TEC	5.39 mm (.212 in)	28°
800R	2.37 mm (.093 in)	18°

3. With the TDC gauge indicating specified timing, use a permanent marker to draw a line on the drive pulley fixed sheave directly in line with pointer end.

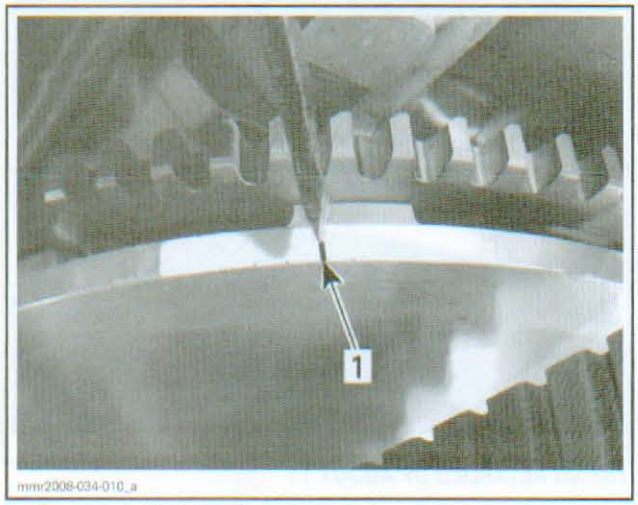

1. Timing mark in line with pointer end

4. Repeat the procedure to ascertain the mark is exactly in line with the pointer.

500SS/600/800R

5. Remove TDC gauge and install spark plug. Refer to *SPARK PLUG INSTALLATION* in this section.
6. Reconnect spark plug cable.
7. Check ignition timing as per applicable procedure in this section.

600 HO E-TEC

8. Remove the TDC gauge and dial indicator adapter.
9. Reinstall the fuel injector. Refer to *E-TEC DIRECT INJECTION* section.
10. Reconnect magneto connector.
11. Check ignition timing as per applicable procedure in this section.

Checking Ignition Timing (500SS/600/800R)

The ignition timing can be checked with either the engine hot or cold at the specified RPM.

ENGINE SPEED FOR IGNITION TIMING CHECK	
MODELS	ENGINE RPM
500SS/600/800R	3500 (1)

(1) In the 3000 to 4000 RPM range, the spark advance does not change. Therefore, at 3500 RPM, a change in engine speed of ± 500 RPM will not affect the timing mark.

To check the ignition timing proceed as follows:

⚠ WARNING

Place ski tips against a wall, raise rear of vehicle on a stand, so that track does not contact the ground. Do not allow anyone in front of or behind the vehicle while engine is running. Keep clear of track and do not wear loose clothing which can get caught in moving parts.

NOTE: On **800R models**, disconnect the TPS connector.

1. Connect the timing light pick-up to the **MAG** spark plug cable.

www.midwestmanuals.com

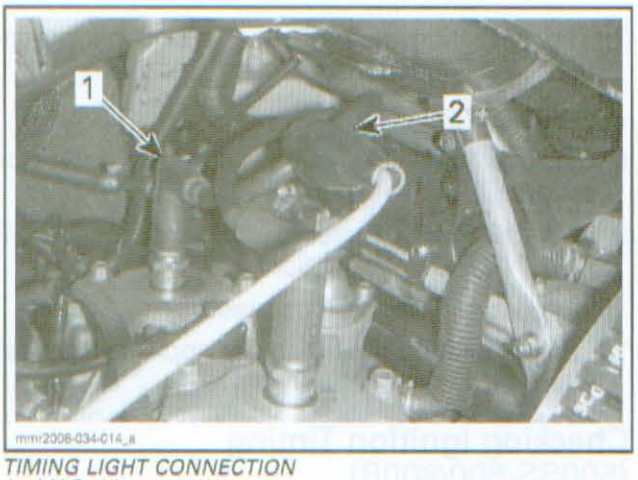

TIMING LIGHT CONNECTION
1. *MAG side spark plug*
2. *Timing light connection to MAG plug cable*

2. Connect the DIGITAL INDUCTIVE TYPE TACHOMETER (P/N 529 014 500) to a spark plug cable.

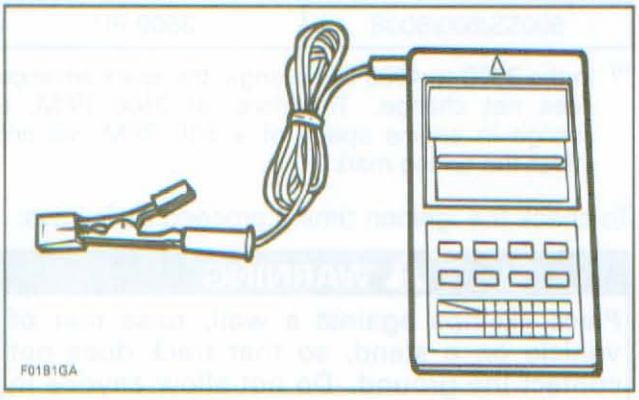

TACHOMETER

NOTICE Before starting engine, check cable routing of test equipment to ensure it cannot come into contact with rotating parts or with the exhaust manifold.

3. Start the engine and point timing light on timing mark/pointer.
4. Bring engine to the specified engine speed (3500 RPM) for a brief instant.

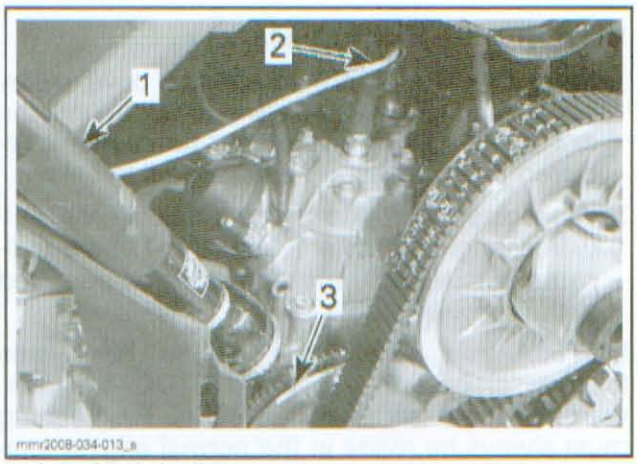

1. *Inductive timing light*
2. *Timing light cable to MAG plug*
3. *Timing mark/pointer alignment*

5. Ensure timing mark is aligned with the pointer end within the specified tolerance.

MODEL	TOLERANCE
500SS/600/800R	± 1°

If marks are aligned, no adjustment is required.

If marks are not aligned, note if timing is retarded or advanced, see following illustrations. Then, adjust timing as described in *ADJUSTING TIMING (500SS/600/800R)* further in this section.

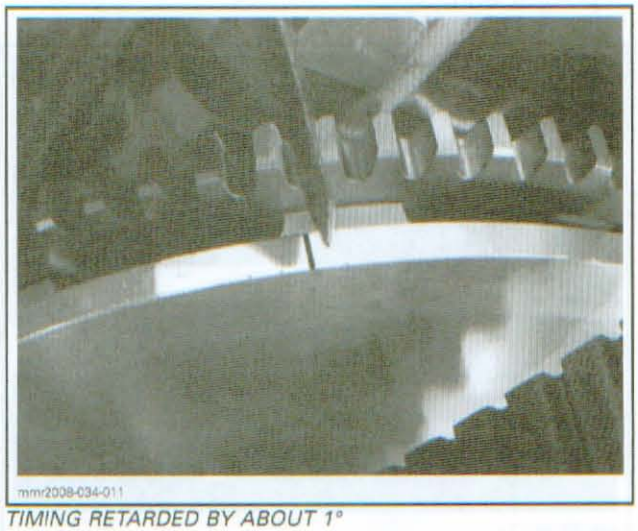

TIMING RETARDED BY ABOUT 1°

www.midwestmanuals.com

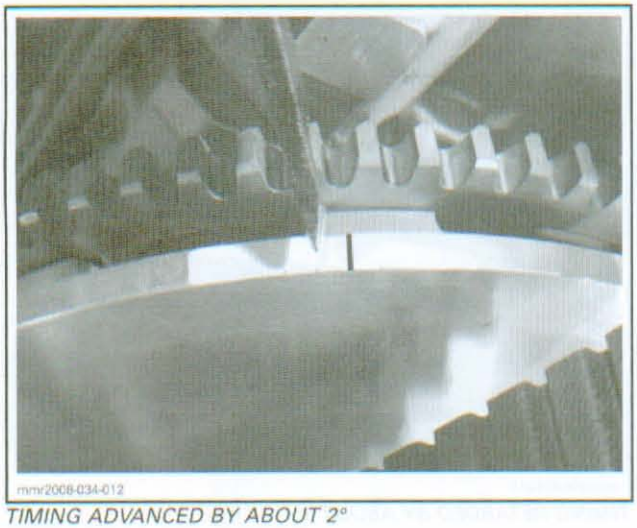

TIMING ADVANCED BY ABOUT 2°

Checking Ignition Timing (600 HO E-TEC)

The ignition timing can be checked with either the engine hot or cold at the specified RPM.

ENGINE SPEED FOR IGNITION TIMING CHECK	
MODEL	ENGINE RPM
600 HO E-TEC	3500

NOTE: In the 2500 to 4000 RPM range, the spark advance does not change during the procedure. Therefore, at 3500 RPM, a change in engine speed of ± 500 RPM will not affect the timing mark.

To check the ignition timing proceed as follows:

⚠ WARNING

Place ski tips against a wall, raise rear of vehicle on a stand, so that track does not contact the ground. Do not allow anyone in front of or behind the vehicle while engine is running. Keep clear of track and do not wear loose clothing which can get caught in moving parts.

1. Connect the timing light pick-up to the PTO spark plug cable.

NOTE: Be careful to route timing light cable away from drive belt and pulleys.

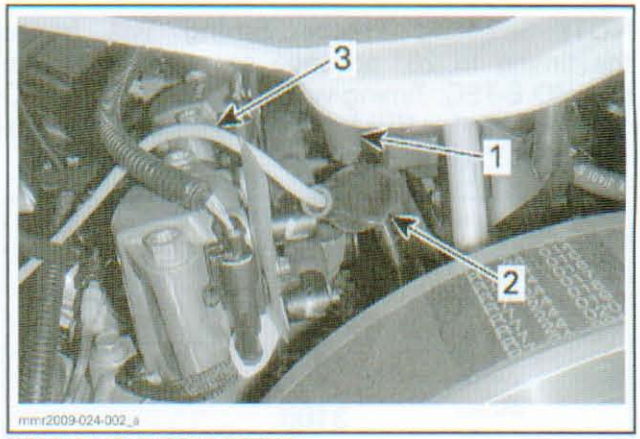

TIMING LIGHT CONNECTION
1. *PTO spark plug cable*
2. *Timing light connection to PTO plug cable*
3. *Timing light wire routing*

2. Remove RH side panel, refer to *BODY* section.
3. Connect to the latest B.U.D.S. software applicable to the E-TEC from BOSSWeb. Refer to *COMMUNICATION TOOLS AND B.U.D.S. SOFTWARE* section.
4. Start engine and let idle.
5. In B.U.D.S., select **Read Data**.
6. Select the **Setting** tab.
7. At the bottom of the setting page, select the **ECM** tab.
8. At the bottom left hand corner of the page, you will be able to read the **RPM Value** and the **Offset Angle** in the Ignition/Injection Timing field.

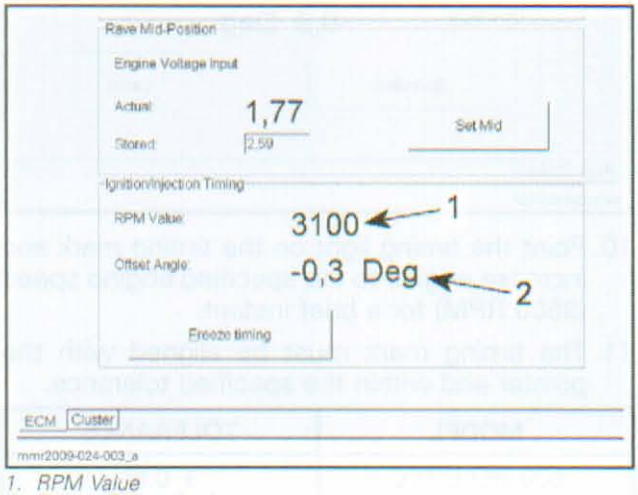

1. *RPM Value*
2. *Timing Offset Angle*

9. In the **Ignition/Injection Timing** field, select **Freeze timing**.

www.midwestmanuals.com

NOTE: Selecting **Freeze timing** will freeze the timing to 28° advance as required by the 600 HO E-TEC. Timing will be frozen on the PTO cylinder only for RPM stability. RPM will be limited to 4000 RPM.

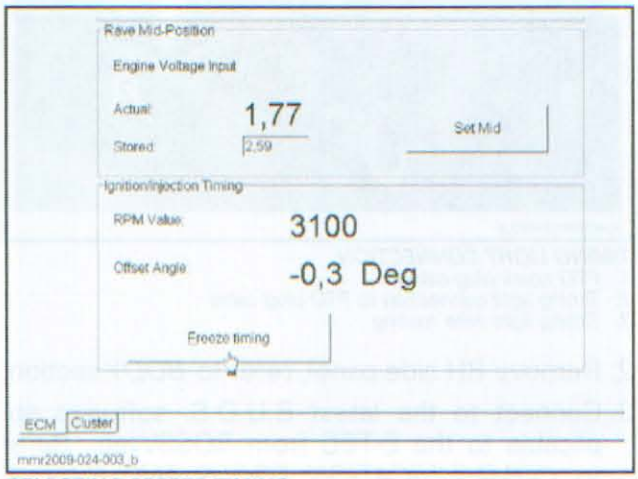

SELECTING FREEZE TIMING

Note how the available buttons in the **Ignition/Injection Timing** field have changed.



10. Point the timing light on the timing mark and increase engine to the specified engine speed (**3500 RPM**) for a brief instant.
11. The timing mark must be aligned with the pointer end within the specified tolerance.

MODEL	TOLERANCE
600 HO E-TEC	± 0.5°

If timing mark and pointer are aligned, no adjustment is required.

If they are not aligned, note if timing is retarded or advanced, see following illustrations. Then, adjust timing as described in *ADJUSTING TIMING (E-TEC)* further in this section.

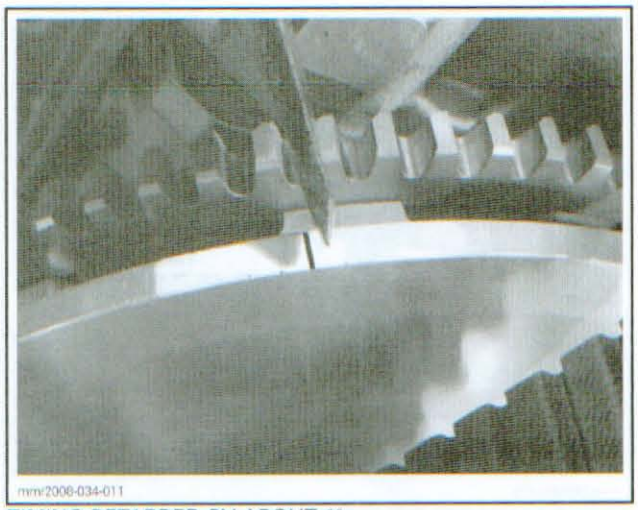

TIMING RETARDED BY ABOUT 1°

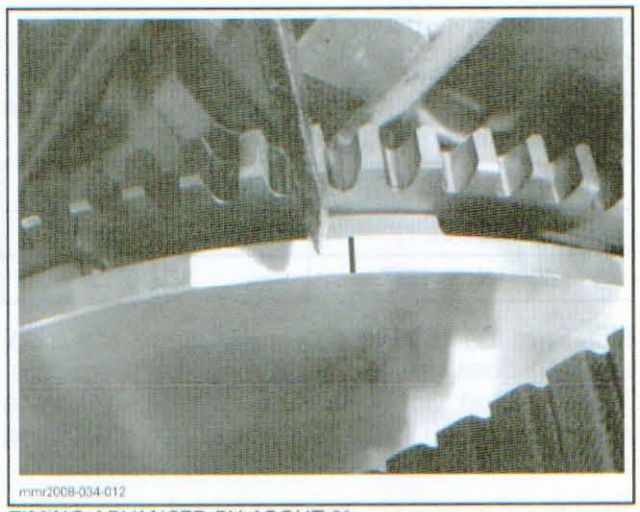

TIMING ADVANCED BY ABOUT 2°

Adjusting Timing (500SS/600/800R)

1. Connect vehicle to the latest applicable B.U.D.S. software available from BOSSWeb. Refer to *COMMUNICATION TOOLS AND B.U.D.S. SOFTWARE* section.
2. Select **Read Data**.
3. Select the **Setting** page tab.
4. To change the ignition timing, select the appropriate correction in the **Ignition Correction** field.

www.midwestmanuals.com

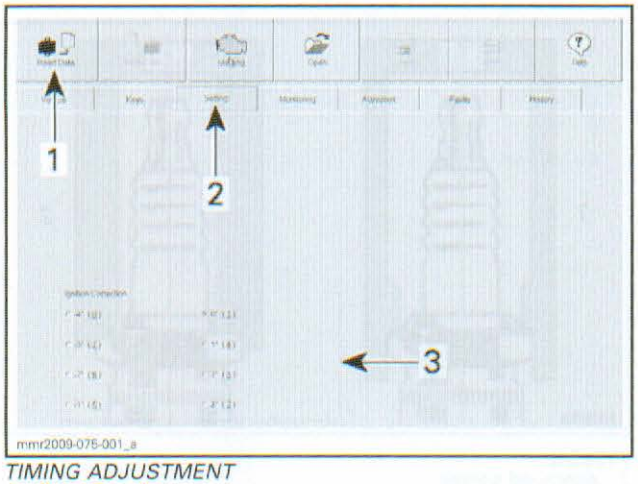

TIMING ADJUSTMENT
1. *Read Data button*
2. *Setting page tab*
3. *Ignition Correction field*

5. Once the appropriate correction has been selected and verified, select **Write Data** in the **File** menu to save the correction.

Detailed information about the B.U.D.S. software and its usage is available under its **Help** section.

6. Remove all tools and reinstall removed parts.

NOTE: On **800R models**, be sure to reconnect TPS connector.

Adjusting Timing (600 HO E-TEC)

1. In the **Ignition/Injection Timing** field on the **Setting** page, select **Advance** or **Retard** to change the ignition timing, and **Cancel** to erase the last change.

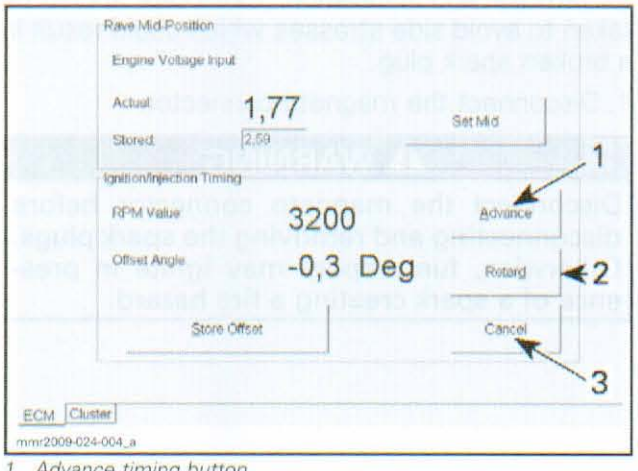

1. *Advance timing button*
2. *Retard timing button*
3. *Cancel timing change*

NOTE: Timing will be changed in 0.5° increments.

2. Adjust the timing using the appropriate button until the timing mark is in line with the pointer, within 0.5°. Then select **Store Offset** to store the ignition timing correction.

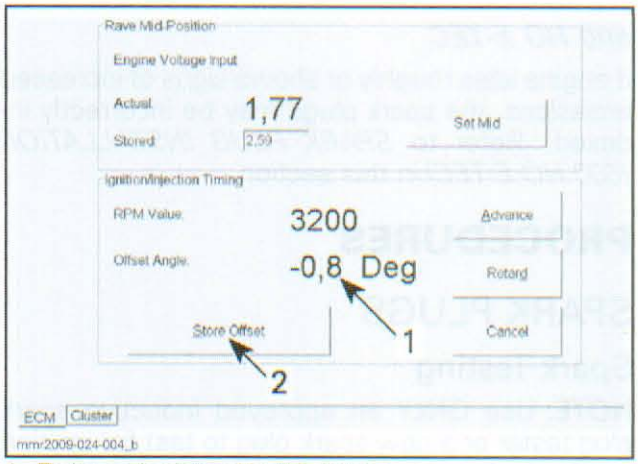

1. *Timing angle changed by 0.5 degrees*
2. *Store offset button*

3. Shut down engine.
4. Restart engine and select **Read Data** in B.U.D.S.
5. Recheck timing to ensure ignition timing adjustment was properly stored in the ECM.
6. Increase engine RPM pass 4000 RPM to ascertain the **Freeze Timing** function is no longer active.

NOTE: The **Freeze Timing** function automatically disengages when the engine is shutdown.

7. Remove all tools.

TROUBLESHOOTING

IGNITION SYSTEM TESTING SEQUENCE

NOTE: On applicable models, it is good practice to check for fault codes using the B.U.D.S. software as a first troubleshooting step. Refer to the *MONITORING SYSTEM AND FAULT CODES* section.

In the case of ignition problems, check the following in the prescribed order until the problem can be solved:

1. Spark plugs
2. Spark plug cables
3. Wiring harness/electrical connectors
4. Engine stop switch
5. Ignition coil(s)
6. Trigger coils (**500SS/600/800R**)
7. CPS (**600 HO E-TEC**)
8. ECM (Engine Control Module).

www.midwestmanuals.com

600 HO E-TEC

If engine idles roughly or shows signs of increased emissions, the spark plugs may be incorrectly indexed. Refer to *SPARK PLUG INSTALLATION (600 HO E-TEC)* in this section.

PROCEDURES

SPARK PLUGS

Spark Testing

NOTE: Use ONLY an approved inductive spark plug tester or a new spark plug to test for ignition spark. In line (series connected) spark testers must not be used. Radio frequency interference (RFI) generated by the arcing current may cause erratic behavior in the ECM.

⚠ WARNING

On 600 HO E-TEC models, always electrically disconnect both fuel injectors prior to testing for ignition spark. Otherwise, fuel vapors may ignite in presence of a spark creating a fire hazard.

1. Install the inductive spark tester (or a new spark plug) on the spark plug cable (**Do not remove spark plugs installed on engine**).
2. Bring the new plug into contact with the engine.
3. Pull rewind starter or press START/RER button as applicable.
4. If no spark is produced, refer to *IGNITION SYSTEM TESTING SEQUENCE* in this section.
5. If a spark is produced, install new spark plugs in the engine and repeat the test to assure the new spark plugs are in good condition and functioning correctly.

Spark Plug Removal (500SS/600/800R)

NOTE: Use only an approved spark plug socket for removal and installation. Extra care should be taken to avoid side stresses which could result in a broken spark plug.

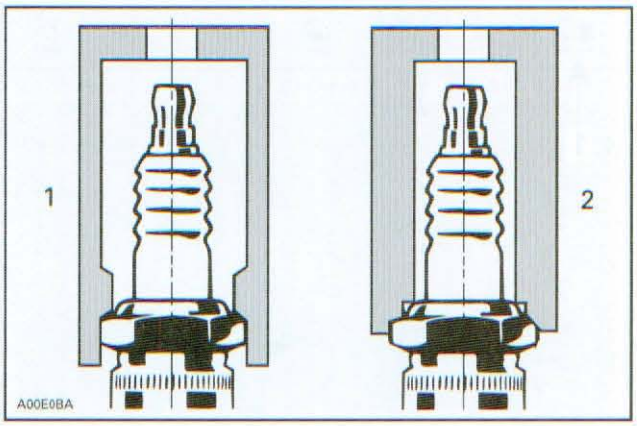

TYPICAL
1. Approved socket
2. Improper socket

1. First unscrew the spark plug 1 turn.
2. Clean the spark plug and cylinder head with pressurized air.
3. Remove spark plug from engine.

⚠ WARNING

Whenever using compressed air, always wear protective eye wear.

Spark Plug Removal (600 HO E-TEC)

NOTICE **Due to limited access, spark plugs should only be removed when absolutely required.**

NOTE: Use only an approved spark plug socket for removal and installation. Extra care should be taken to avoid side stresses which could result in a broken spark plug.

1. Disconnect the magneto connector.

⚠ WARNING

Disconnect the magneto connector before disconnecting and removing the spark plugs. Otherwise, fuel vapors may ignite in presence of a spark creating a fire hazard.

www.midwestmanuals.com

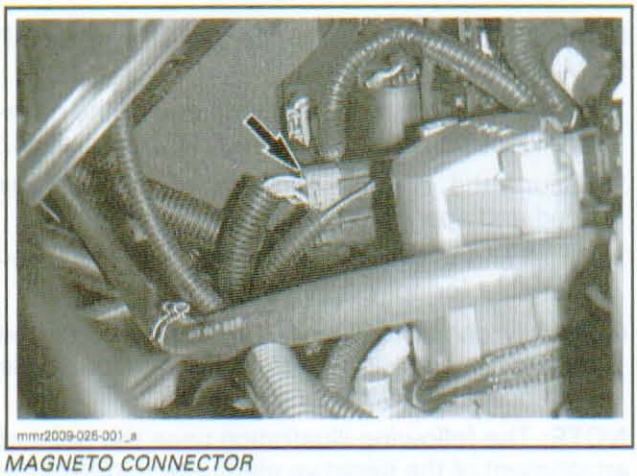

MAGNETO CONNECTOR

2. Remove spark plug cables by gently rotating the cap and pulling it off the plug.

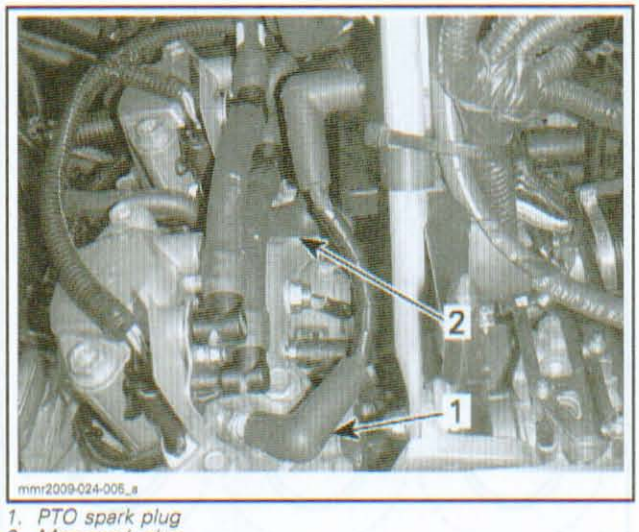

1. *PTO spark plug*
2. *Mag spark plug*

3. Clean the spark plug and cylinder head with pressurized air.
4. Proceed to applicable spark plug procedure (PTO or MAG side).

⚠ WARNING

Whenever using compressed air, always wear protective eye wear.

PTO Spark Plug

1. Install an approved spark plug socket onto the spark plug.
2. Using a 19 mm (3/4 in) wrench on the spark plug socket, unscrew the spark plug just enough to break the applied torque.

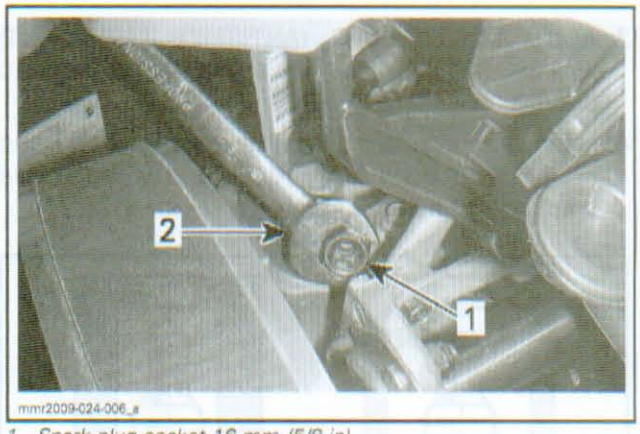

1. *Spark plug socket 16 mm (5/8 in)*
2. *Wrench 19 mm (3/4 in)*

3. Remove wrench from spark plug socket and unscrew the spark plug by hand.

MAG Spark Plug

1. Remove the primary air intake silencer.
2. Install an approved spark plug socket onto the spark plug.
3. Using a ratchet wrench, extension, and a crowfoot, unscrew the spark plug just enough to break the applied torque.

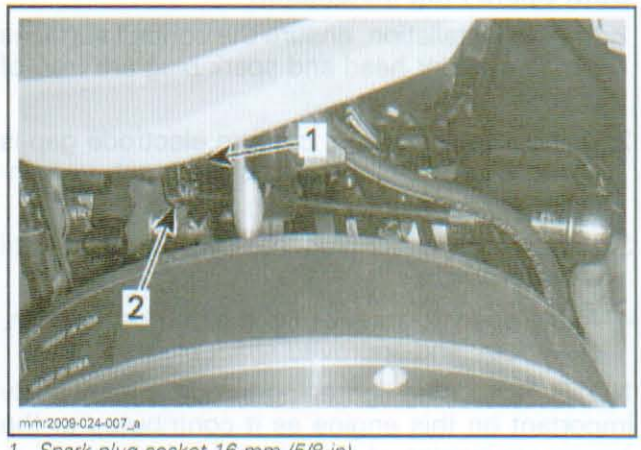

1. *Spark plug socket 16 mm (5/8 in)*
2. *Crowfoot 19 mm (3/4 in)*

4. Remove wrench from spark plug socket and unscrew the spark plug by hand.

Spark Plug Installation (500SS/600/800R)

1. Prior to installation, ensure the contact surfaces of the cylinder head and spark plug are free of grime.
2. Using a feeler gauge, ensure electrode gap is set to 8 mm (.31 in). If gap is incorrect, replace spark plug.

www.midwestmanuals.com

3. Apply LOCTITE 767 (ANTISEIZE LUBRICANT) (P/N 293 800 070) over the spark plug threads to prevent possible seizure.
4. Hand screw spark plug into cylinder head and tighten with a torque wrench and an approved spark plug socket to 28 N•m (21 lbf•ft).

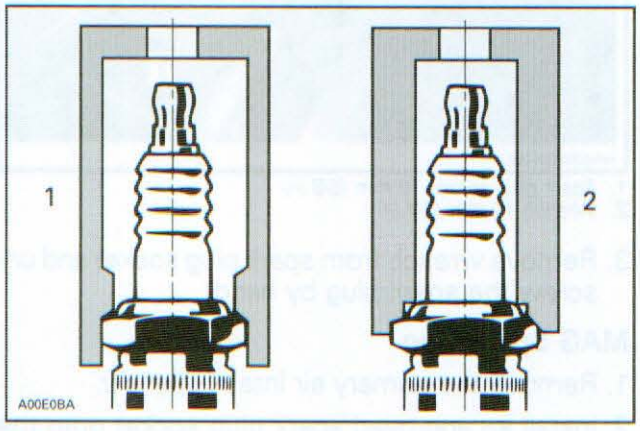

TYPICAL
1. *Approved socket*
2. *Improper socket*

Spark Plug Installation (600 HO E-TEC)

OEM Spark Plug Installation

1. Prior to installation, ensure the contact surfaces of the cylinder head and spark plug are free of grime.
2. Using a feeler gauge, confirm electrode gap is set to 8 mm (.31 in) If gap is incorrect, use another spark plug.
3. Hand screw spark plug into cylinder head until it bottoms out.
4. Apply specific torque using a torque wrench, crow foot, and approved spark plug socket.

NOTE: Spark plug tightening torque is particularly important on this engine as it contributes to the proper positioning of the negative electrode

MODEL	SPARK PLUG	TORQUE
600 HO E-TEC	BRP NGK PZFR6F	28 N•m (21 lbf•ft)

5. Apply DIELECTRIC GREASE (P/N 293 550 004) on contact in spark plug cap of the ignition cable prior to connecting it onto the spark plug.

Non-OEM Spark Plug Installation

NOTE: When using a non-OEM spark plug, it must be correctly indexed or engine may experience rough idling and higher emissions.

Carry out the following procedure if a non BRP OEM spark plug is used.

1. Using a marker, mark the open end of the negative electrode on the plug shell (above threads).
2. Ensure the contact surfaces of the cylinder head and spark plug are free of grime.
3. Install and torque the spark plug, refer to previous table for specific torque.
4. Visually check to ensure the open end of the negative electrode is facing the injector nozzle within 90° (45° each side of nozzle).

NOTE: The following illustration uses the point of attachment of the negative electrode to depict the angle. The injector is illustrated above the spark plug.

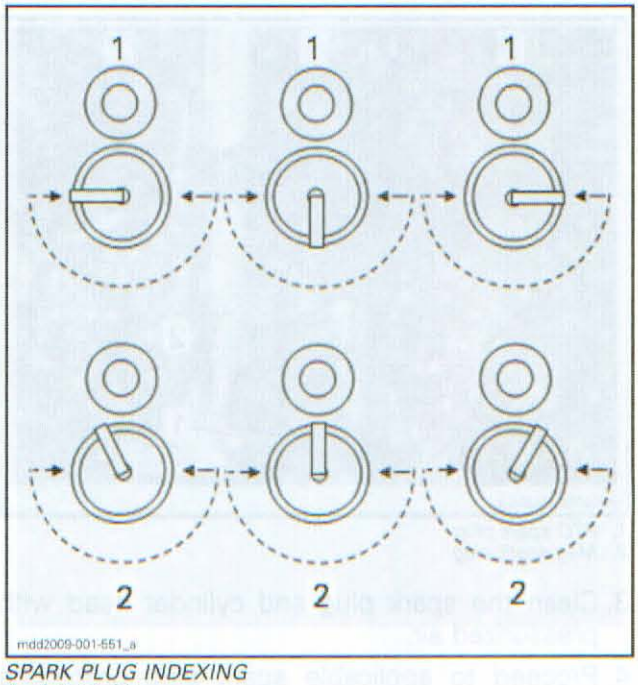

SPARK PLUG INDEXING
1. *Acceptable*
2. *Unacceptable*

If the plug indexing angle is not within specification, repeat procedure with another spark plug until correct indexing is achieved.

SPARK PLUG CABLES (500SS/600/800R)

Spark Plug Cable Resistance Test

Before removing a spark plug cable from the ignition coil, carry out a resistance test of the coil secondary winding with both spark plug cables installed. Refer to *IGNITION COIL RESISTANCE TEST (500SS/600/800R)* in this section.

www.midwestmanuals.com

If the resistance test through the coil secondary winding failed, carry out the following steps to test each spark plug cable.

1. Take a firm hold of the spark plug cable near the coil and unscrew it from the coil.
2. Set multimeter to Ω selection and measure the resistance through the cable.

SPARK PLUG CABLE RESISTANCE TEST	
500SS/600/800R	11.9 kΩ to 20.3 kΩ

If resistance is not as specified, replace spark plug cable.

NOTE: Apply DIELECTRIC GREASE (P/N 293 550 004) on contact in spark plug cap before reinstalling cable.

SPARK PLUG CABLES (600 HO E-TEC)

Spark Plug Cable Resistance Test

If the spark plug cables are in good condition, carry out the following resistance test.

1. Remove each spark plug cable from its ignition coil and spark plug.
2. Set multimeter to Ω.
3. Insert a probe in each cable end and measure the resistance.

SPARK PLUG CABLE RESISTANCE
1283 – 4083 Ω

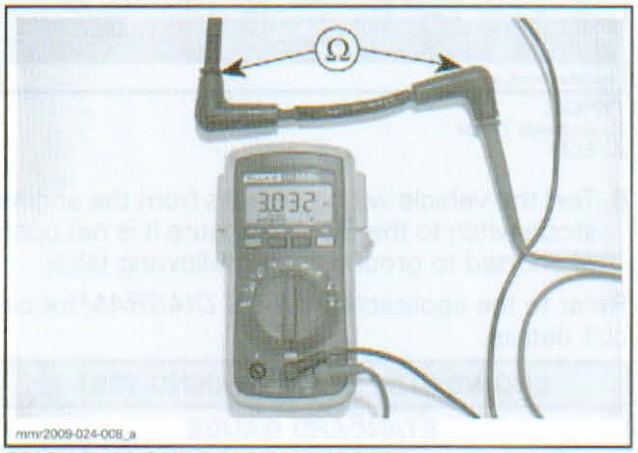

SPARK PLUG CABLE RESISTANCE TEST

If resistance is not as specified, replace spark plug cable.

NOTE: Apply DIELECTRIC GREASE (P/N 293 550 004) on contact in spark plug cap before reinstalling cable.

NOTICE Do not interchange spark plug cables. The lower LH coil must be matched to the PTO spark plug.

ENGINE STOP SWITCH

Engine Stop Switch Operation

The engine stop switch provides a ground signal to the ECM when STOP is selected.

500SS/600/800R

The ground signal is applied to the ECM connector pin 23, through the engine stop switch (STOP position).

600 HO E-TEC

The ground signal is applied to ECM connector "J1A" pin 9, through the engine stop switch (STOP position).

Refer to applicable *WIRING DIAGRAM* for details.

Engine Stop Switch Troubleshooting

Engine Will Not Start, No Spark

If the engine will not start and you do not have ignition spark at the plugs, the engine stop switch or its wiring to the ECM may be shorted to ground.

Carry out an *ENGINE STOP SWITCH CONTINUITY TEST*, and a *ENGINE STOP SWITCH WIRING TEST* as per applicable procedures in this section.

Engine Will Not Stop

The engine stop switch and wiring may be open-circuit (no ground available).

Carry out an *ENGINE STOP SWITCH CONTINUITY TEST* and an *ENGINE STOP SWITCH WIRING TEST* as per applicable procedures in this section.

Engine Stop Switch Continuity Test

To test the engine stop switch, carry out the following steps.

1. Disconnect the RH steering connector (GD) under the steering cover.

www.midwestmanuals.com

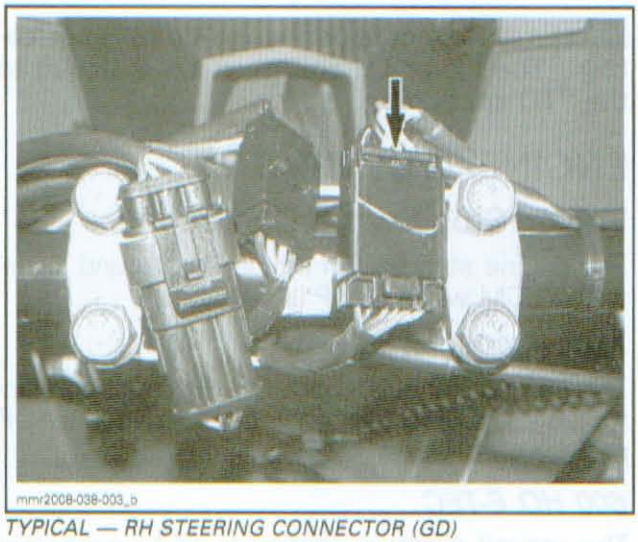

TYPICAL — RH STEERING CONNECTOR (GD)

2. Set the FLUKE 115 MULTIMETER (P/N 529 035 868) multimeter to Ω.
3. Measure the resistance through the switch and its wiring as follows.

NOTE: Some engine stop switches use two BLACK wires, and others use one BLACK wire and one BLACK/YELLOW. Pin numbers in connectors vary with vehicle types and gauge types. Refer to the appropriate *WIRING DIAGRAM* for pin numbers.

ENGINE STOP SWITCH CONTINUITY TEST			
SWITCH POSITION	TEST PROBES		RESISTANCE
RUN	BK wire	BK or BK/YL wire	Infinite (OL)
STOP			0 to 0.5 Ω

If readings are not as specified in table, replace switch or repair wiring/connector.

If readings are as specified, refer to *ENGINE STOP SWITCH WIRING TEST* applicable to model.

Engine Stop Switch Wiring Test (500SS/600/800R Models)

1. Remove the steering cover.
2. Disconnect the RH steering connector (GD).

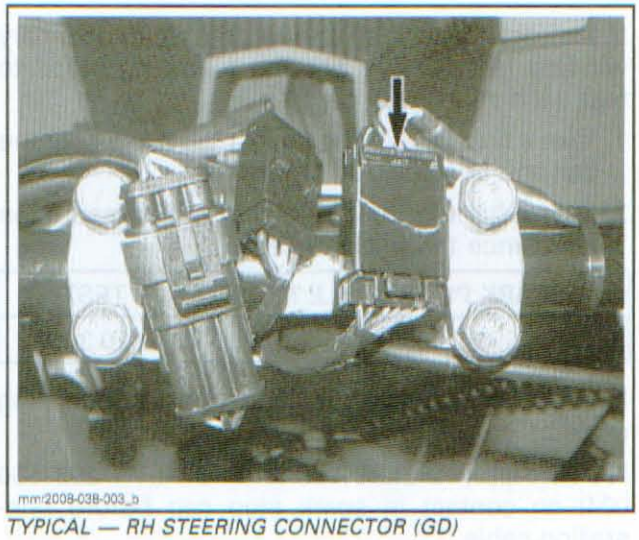

TYPICAL — RH STEERING CONNECTOR (GD)

3. Open the RH side panel.
4. Remove acoustic panel.
5. Disconnect the ECM connector.



TYPICAL
1. Acoustic panel
2. ECM

6. Test the vehicle wiring harness from the engine stop switch to the ECM to ensure it is not open or shorted to ground as per following table.

Refer to the applicable *WIRING DIAGRAM* for circuit details.

ENGINE STOP SWITCH WIRING TEST		
STANDARD GAUGE		
PROBE GD CONNECTOR		RESISTANCE
Pin 7 (BK/YL) Vehicle harness	Chassis ground	Infinite (OL)
	ECM pin 23	Close to 0 Ω (continuity)

www.midwestmanuals.com

ENGINE STOP SWITCH WIRING TEST		
PREMIUM GAUGE		
PROBE GD CONNECTOR		RESISTANCE
Pin 5 (BK/YL) Vehicle harness	Chassis ground	Infinite (OL)
	ECM pin 23	Close to 0 Ω (continuity)

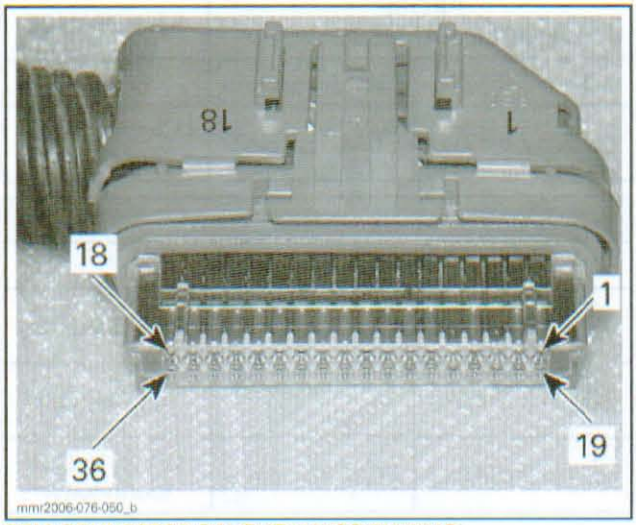

ECM CONNECTOR PIN-OUT (500SS/600/800R)

If a low resistance to chassis ground is found, refer to step 7.

If you do not have continuity to the ECM, refer to step 11.

7. Remove the multifunction gauge.
8. Disconnect the HG connector to isolate the steering harness from the main harness.

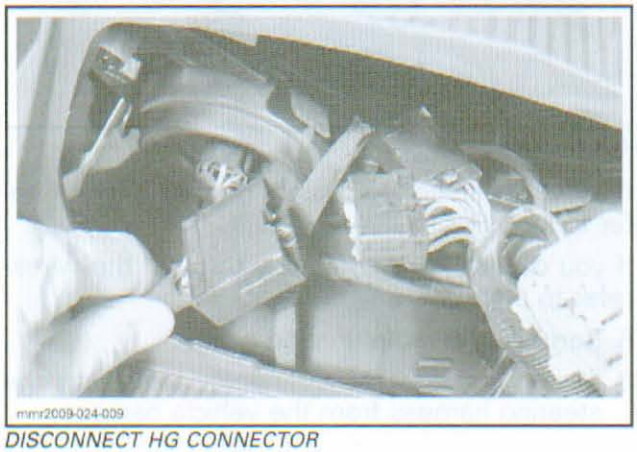

DISCONNECT HG CONNECTOR

9. Test each harness as per table to determine which harness is shorted to ground.

PROBE HG CONNECTORS		RESISTANCE
Pin 6 (BK/YL) Vehicle harness side	Chassis ground	Infinite (OL)
Pin 6 (BK/YL) Steering harness side		



TYPICAL - VEHICLE HARNESS TO GROUND



TYPICAL - STEERING HARNESS TO GROUND

10. If a short circuit (low resistance to ground) is found, repair or replace wiring.
11. If engine stop switch circuit is found to be open, test for continuity of each harness as per following table.

STANDARD GAUGE		
STEERING HARNESS SIDE		RESISTANCE
HG pin 6	GD pin 7 (BK/YL)	Close to 0 Ω (continuity)
HG pin 2	GD pin 8 (BK/BU)	

www.midwestmanuals.com

PREMIUM GAUGE		
STEERING HARNESS SIDE		RESISTANCE
HG pin 6	GD pin 5 (BK/YL)	Close to 0 Ω (continuity)
HG pin 2	GD pin 6 (BK/BU)	

STANDARD AND PREMIUM GAUGES		
VEHICLE HARNESS SIDE		RESISTANCE
HG pin 6	ECM pin 23	Close to 0 Ω (continuity)
HG pin 2	Chassis ground	

Engine Stop Switch Wiring Test (600 HO E-TEC)

Engine Stop Switch Input Wiring Test

1. Remove the steering cover and disconnect the RH steering connector (GD).

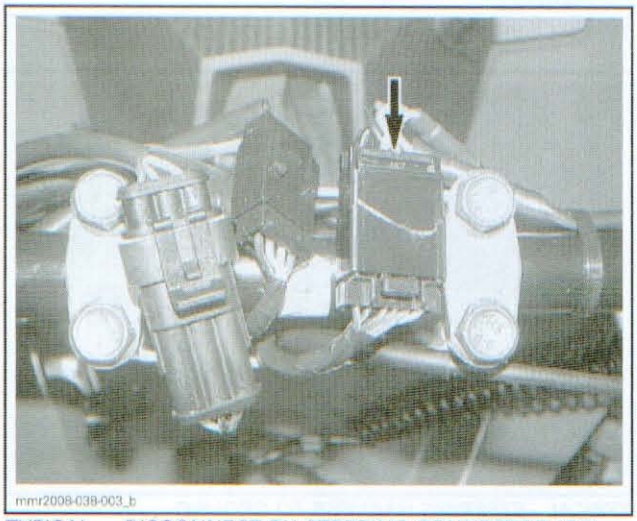

TYPICAL — DISCONNECT RH STEERING CONNECTOR (GD)

2. Open the LH side panel.
3. Disconnect J1A from the ECM (top connector).

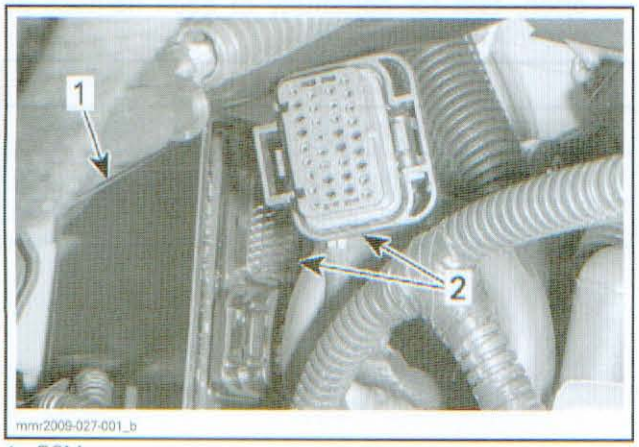

1. *ECM*
2. *J1A disconnected*

4. Test the vehicle wiring harness from the engine stop switch to the ECM to ensure it is not shorted to ground as per following table.

Refer to the applicable *WIRING DIAGRAM* for circuit details.

ENGINE STOP SWITCH WIRING TEST		
STANDARD GAUGE		
PROBE (VEHICLE HARNESS SIDE)		RESISTANCE
GD pin 7 (BK/YL)	Chassis ground	Infinite (OL)
GD pin 7 (BK/YL)	ECM J1A pin 9	Close to 0 Ω (continuity)

ENGINE STOP SWITCH WIRING TEST		
PREMIUM GAUGE		
PROBE (VEHICLE HARNESS SIDE)		RESISTANCE
GD pin 3 (BK/YL)	Chassis ground	Infinite (OL)
GD pin 3 (BK/YL)	ECM J1A pin 9	Close to 0 Ω (continuity)

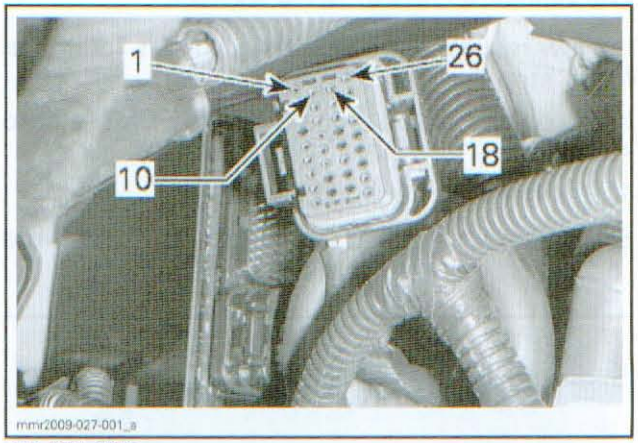

J1A PIN-OUT

If a low resistance to chassis ground is found, refer to step 5.

If you do not have continuity through the wires, refer to step 9.

5. Remove the multifunction gauge.
6. Disconnect the HG connector to isolate the steering harness from the vehicle harness.

www.midwestmanuals.com



DISCONNECT HG CONNECTOR

7. Test each harness as per applicable table to determine which harness is shorted to ground.

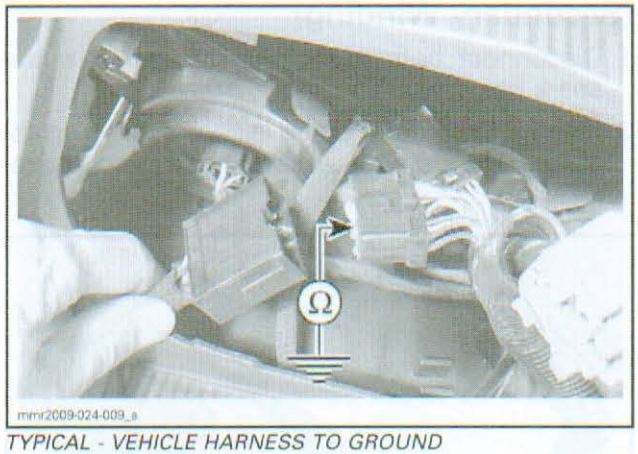

TYPICAL - VEHICLE HARNESS TO GROUND



TYPICAL - STEERING HARNESS TO GROUND

TEST PROBES		RESISTANCE
HG pin 4 (BK/YL) Vehicle Harness Side	Chassis ground	Infinite (OL)
HG pin 4 (BK/YL) Steering Harness Side		

8. If a short circuit (low resistance to ground) is found, repair or replace wiring.

9. If engine stop switch circuit is found to be open, test for continuity of each harness as per following table.

STANDARD GAUGE		
STEERING HARNESS SIDE		RESISTANCE
HG pin 4	GD pin 7 (BK/YL)	Close to 0 Ω (continuity)
HG pin 1	GD pin 8 (BK/BU)	

PREMIUM GAUGE		
STEERING HARNESS SIDE		RESISTANCE
HG pin 4	GD pin 3 (BK/YL)	Close to 0 Ω (continuity)
HG pin 1	GD pin 4 (BK/BU)	

STANDARD AND PREMIUM GAUGES		
VEHICLE HARNESS SIDE		RESISTANCE
HG pin 4	J1A pin 9	Close to 0 Ω (continuity)
HG pin 1	Chassis ground	

Repair or replace wiring or connections.

IGNITION COIL (500SS/600/800R)

The ECM energizes the primary side of the ignition coil.

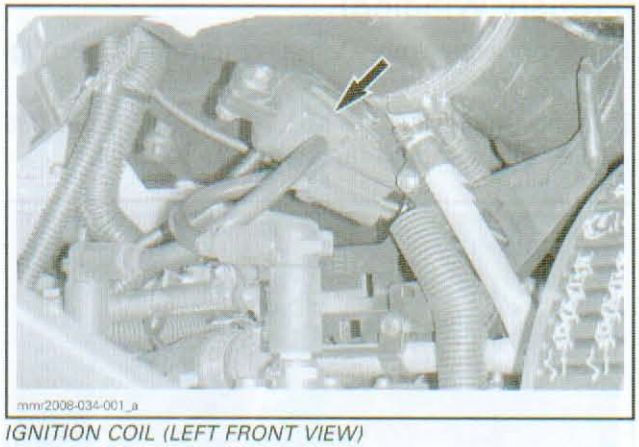

IGNITION COIL (LEFT FRONT VIEW)

The ignition coil induces voltage to a high level in the secondary windings to produce a spark at the spark plugs.

NOTE: Keep in mind that an ignition coil with good resistance measurements can still be faulty. Voltage leak can occur at high voltage levels which is not detectable with an ohmmeter. Replacing the ignition coil may be necessary as a test.

www.midwestmanuals.com

Ignition Coil Test With B.U.D.S.

Use the latest B.U.D.S. software available from BOSSWeb. Refer to *COMMUNICATION TOOLS AND B.U.D.S. SOFTWARE* section.

Energize the **ignition coil** from within the **Activation** tab.

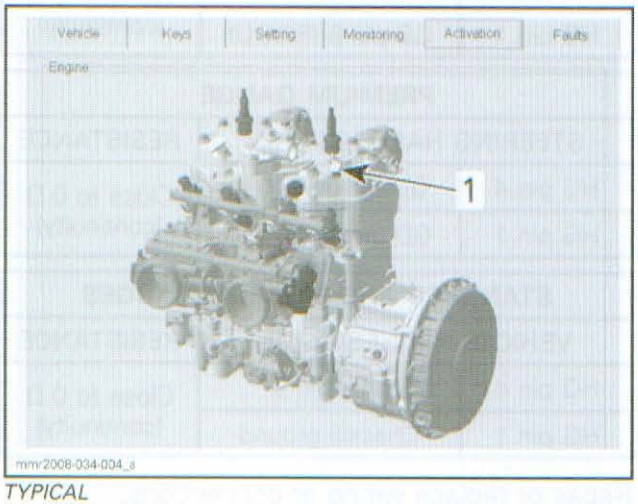

TYPICAL
1. Activate here

You should hear the spark occurring. If in doubt, use an inductive spark tester.

Ignition Coil Resistance Test (Primary Winding)

1. Disconnect primary winding terminals from ignition coil.
2. Using the FLUKE 115 MULTIMETER (P/N 529 035 868), test winding resistance as follows.

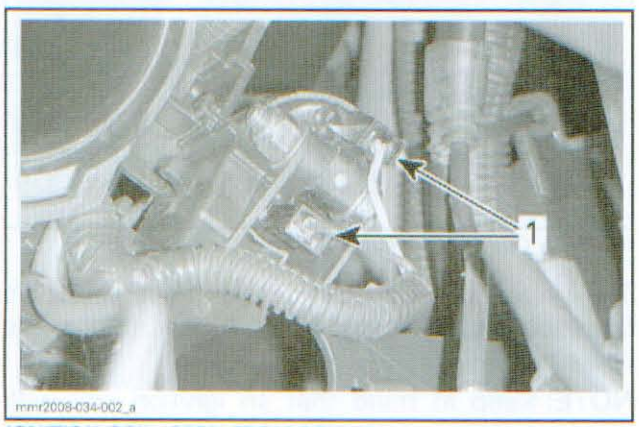

IGNITION COIL (SEEN FROM BEHIND)
1. Primary winding terminals

PRIMARY WINDING RESISTANCE TEST	
TEST PROBES	RESISTANCE @ 20°C (68°F)
Between primary terminals	0.4 - .6 Ω

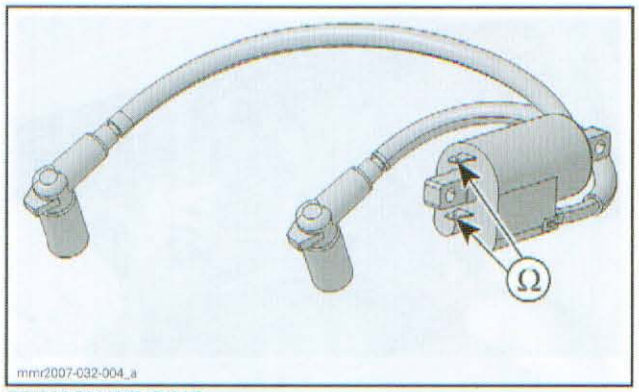

PRIMARY WINDING

If resistance reading through the primary winding is out of specification, replace the ignition coil.

Ignition Coil Resistance Test (Secondary Winding)

1. Disconnect both spark plug cables from the spark plugs.
2. Insert a multimeter probe in each spark plug cable and measure the coil secondary winding resistance.

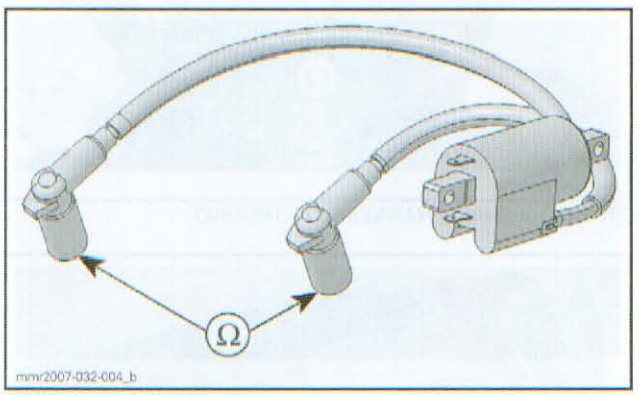

SECONDARY WINDING

SECONDARY WINDING RESISTANCE TEST (SPARK PLUG CABLES INSTALLED)	
TEST PROBES	RESISTANCE @ 20°C (68°F)
Between secondary terminals	21.5 kΩ - 34.7 kΩ

If resistance readings are out of specification, continue with step 3.

3. Remove spark plug cables from the ignition coil, take a firm hold of each cable close to the coil and unscrew the cable from the coil.

www.midwestmanuals.com

SECONDARY WINDING RESISTANCE TEST (SPARK PLUG CABLES REMOVED)	
TEST PROBES	RESISTANCE @ 20°C (68°F)
Between secondary terminals	9.6 kΩ - 14.4 kΩ

If secondary coil resistance is not as specified with cables removed, replace ignition coil.

If secondary coil resistance is as specified, refer to *SPARK PLUG CABLE (500SS/600/800R)* and carry out the cable resistance test.

IGNITION COILS (600 HO E-TEC)

Ignition Coil Testing Sequence

NOTE: A resistance test of the ignition coil primary and secondary windings cannot be carried out due to internal circuits.

Before replacing an ignition coil, carry out the following in this order:

- Ignition coil test with B.U.D.S.
- Ignition coil input voltage test
- Ignition control signal test with B.U.D.S.
- Ignition coil control circuit test
- Ignition coil ground circuit test
- Spark plug cable test
- Spark plug replacement.

Ignition Coil Test with B.U.D.S.

NOTE: The ECM energizes and sends a trigger signal to each ignition coil individually. It can detect if each ignition coil is connected, display a trouble code in the multifunction display, and a CHECK ENGINE upon engine starting.

1. Use the latest B.U.D.S. software applicable to the E-TEC from BOSSWeb. Refer to *COMMUNICATION TOOLS AND B.U.D.S. SOFTWARE* section.
2. Connect B.U.D.S. to the vehicle and select **Read Data**.
3. Select the **Activation** tab.
4. At the bottom LH corner of the activation page, select the **ECM** tab.
5. Energize each ignition coil separately.

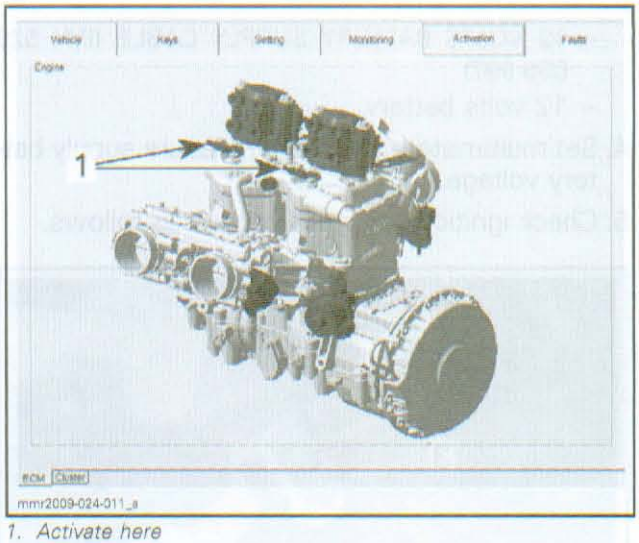

1. Activate here

You should hear the spark occurring. If in doubt, use an inductive spark tester.

If there is no spark, carry out an *IGNITION COIL INPUT VOLTAGE TEST.*

Ignition Coil Input Voltage Test

1. Remove the primary air intake silencer. Refer to *AIR INTAKE SYSTEM* section.
2. Disconnect the connector from each ignition coil.

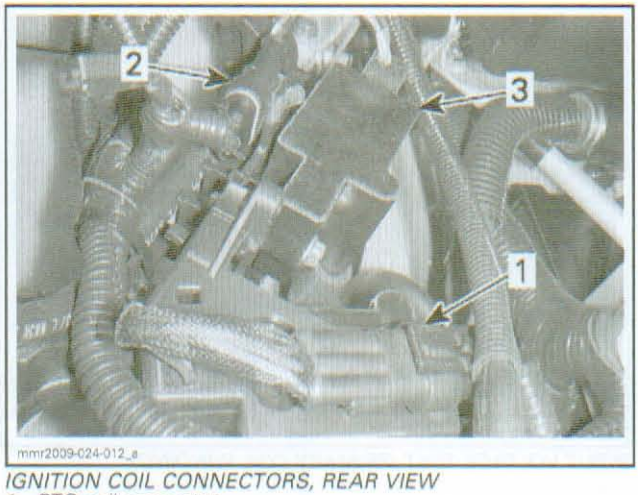

IGNITION COIL CONNECTORS, REAR VIEW
1. PTO coil connector
2. MAG coil connector
3. MAG ignition coil

3. Install the following tools to supply 12 Vdc to the primary 12 Vdc circuits and to the 55 Vdc circuits for this test. Refer to *LIGHTS, INSTRUMENTS AND ACCESSORIES* for proper connections.
   - T-HARNESS (P/N 529 035 869)

www.midwestmanuals.com

- 12 VOLTS BATTERY SUPPLY CABLE (P/N 529 035 997)
- 12 volts battery.

4. Set multimeter to Vdc and measure supply battery voltage.
5. Check ignition coil input voltage as follows.

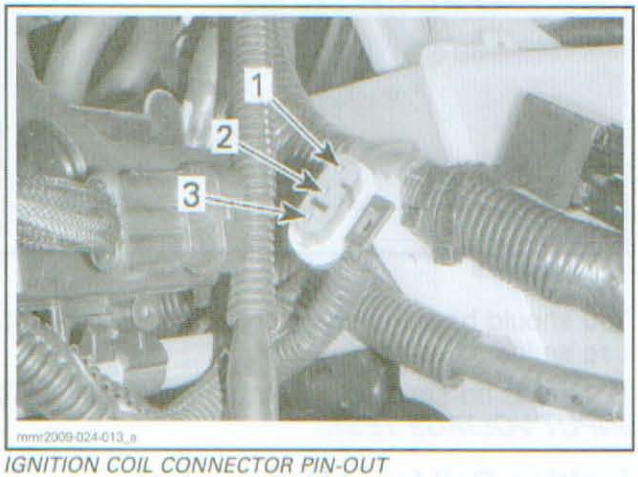

IGNITION COIL CONNECTOR PIN-OUT

IGNITION COIL TERMINAL		VOLTAGE (VDC)
3	Battery ground	Battery voltage minus 0.7 Vdc

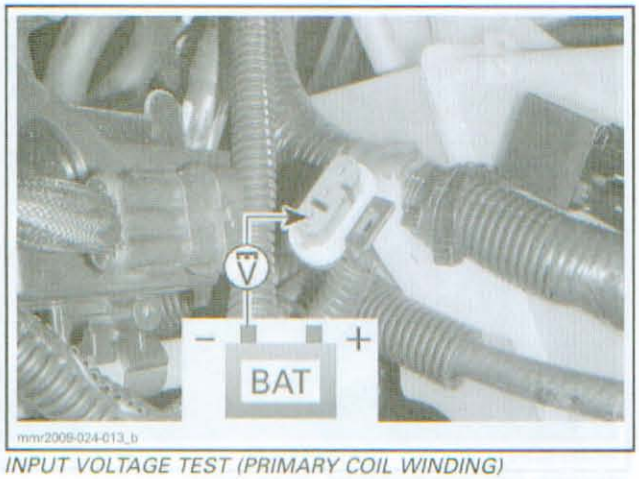

INPUT VOLTAGE TEST (PRIMARY COIL WINDING)

If voltage is NOT as specified, carry out the following. Refer to applicable *WIRING DIAGRAM* for details.

- Check continuity of wire between terminal 3 of ignition coil and pin 13 of the ECM J2 connector.
- Test for supply battery voltage at pins 15 and 16 of ECM J2 connector.
- Test continuity of all ECM ground circuits, refer to *E-TEC DIRECT INJECTION* section.
- Repair or replace wiring as required.

If battery voltage is read at coil input, carry out the following. Refer to applicable *WIRING DIAGRAM* for details.

- Ignition control signal test with B.U.D.S.
- Spark plug cable resistance test
- Continuity test of ignition coil control circuit
- Continuity test of coil ground circuit, pin 1 to chassis ground
- Replace coil
- Replace ECM.

Ignition Coil Control Signal Test with B.U.D.S.

1. Disconnect the affected ignition coil connector.
2. Set multimeter to Vdc, then select the frequency function (Hz), and manually set the scale to 6 Hz.

NOTE: If the meter is left in automatic range mode, you will not obtain a reading as the ignition control signal is too fast and for too short a period of time for the meter to adjust and take the reading. The meter must be in a low manual Hz range.

3. Set multimeter to a low manual Hz range.
4. Select the MAX. function on the multimeter to record the maximum reading detected.
5. Install an alligator clip adapter to the BLACK (–) probe, and a thin rigid back probe to the RED multimeter probe.

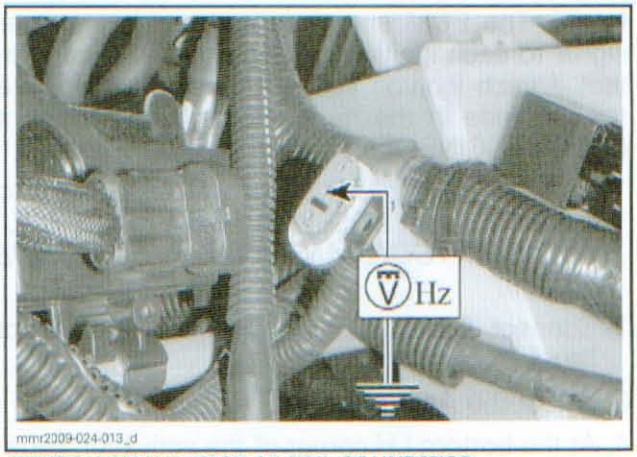

IGNITION SIGNAL TEST AT COIL CONNECTOR

6. Insert the RED probe in pin 2 (OR wire) of the coil connector, and clip the BLACK probe to engine ground.
7. In B.U.D.S., energize the affected ignition coil separately.

www.midwestmanuals.com

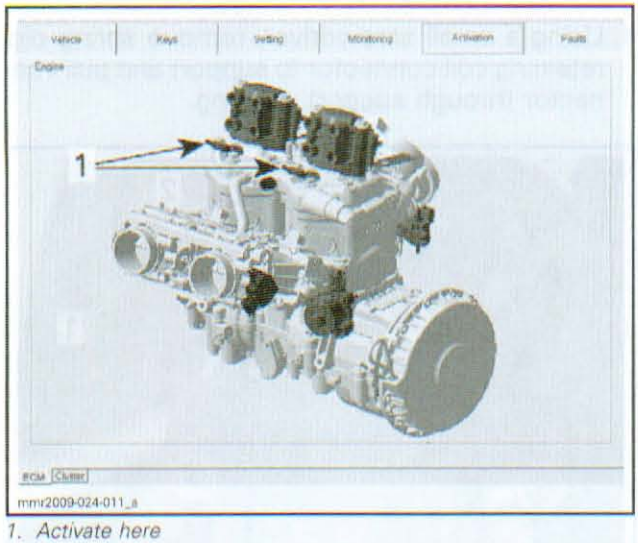

1. Activate here

METER SELECTION	TEST PROBES		READING
Vdc Hz manual range	Coil connector	Engine	Approximately 2 Hz
	Pin 2 (OR)	Ground	

Frequency of ignition signal should consistently be approximately 2 Hz.

If signal is not present, refer to *IGNITION COIL CONTROL CIRCUIT.*

If the ignition coil control signal test was good, test the following before installing a new coil.

- Ignition coil ground circuit test
- Spark plug cable resistance test
- Spark plugs.

Ignition Coil Control Circuit Test

1. Disconnect connector J1B from ECM.
2. Test for continuity of the circuit between ECM connector and ignition coil connector as follows.

CONNECTOR PIN			
CYLINDER	ECM J1B	IGNITION COIL	RESISTANCE
PTO	19	2	Close to 0 Ω (continuity)
MAG	26	2	

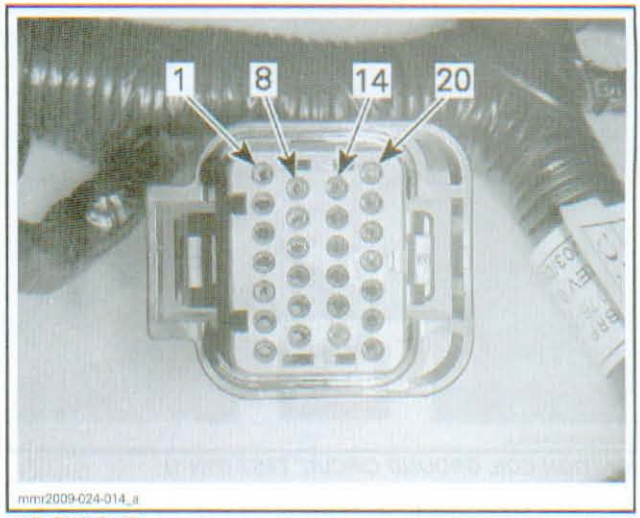

J1B PIN-OUT

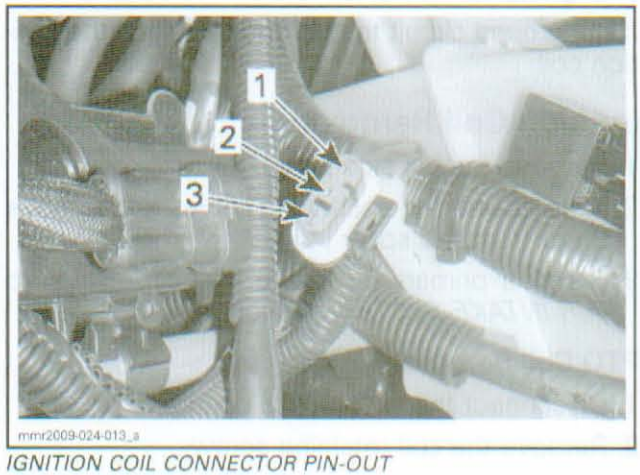

IGNITION COIL CONNECTOR PIN-OUT

If wiring harness is defective, repair the connector or replace the wiring harness between ECM connector and the ignition coil.

If wiring harness tested good, refer to *IGNITION COIL GROUND CIRCUIT TEST.*

Ignition Coil Ground Circuit Test

1. Disconnect the input connector from both coils.
2. Test for continuity of the coil ground circuit as follows.

CYLINDER	IGNITION COIL CONNECTOR		RESISTANCE
PTO	Pin 1	Chassis ground	Close to 0 Ω (continuity)
MAG			

www.midwestmanuals.com

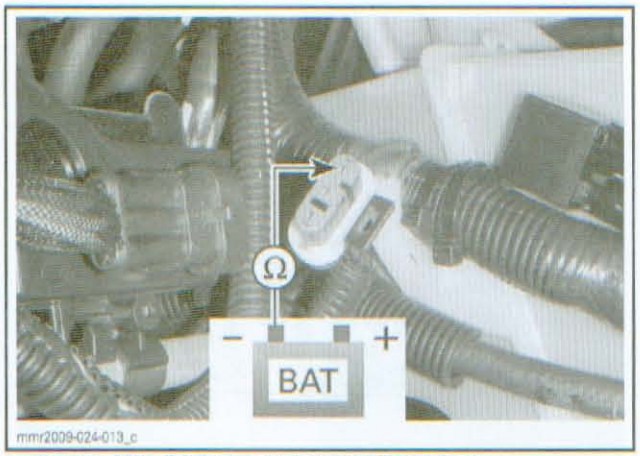

IGNITION COIL GROUND CIRCUIT TEST (PIN 1)

If wiring harness is defective, repair or replace the wiring and connectors.

If the ground circuit tested good, replace the ignition coil.

Ignition Coil Removal

1. Remove the LH side panel.
2. Note position of spark plug cables and remove them from the spark plugs.
3. Remove primary air intake silencer. Refer to *AIR INTAKE SYSTEM* section.

PTO Coil Removal

1. Disconnect the ignition coil connector.
2. Remove the coil retaining screw.

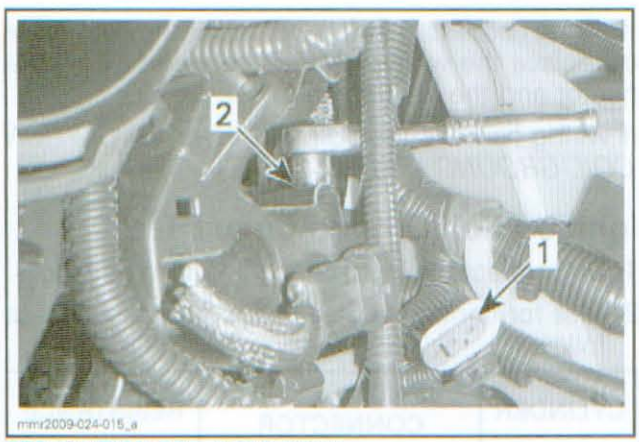

PTO IGNITION COIL (REAR VIEW)
1. Disconnect coil connector
2. Remove coil retaining screw

NOTE: PTO coil connector is mounted to the support with a retaining clip. Coil must be off support to access clip for removal.

3. Using a screwdriver, lift the retaining tab out of the second coil mounting hole to release coil from support. Do not pull coil away from support.
4. Using a small screwdriver, remove spring clip retaining coil connector to support and pull connector through support opening.

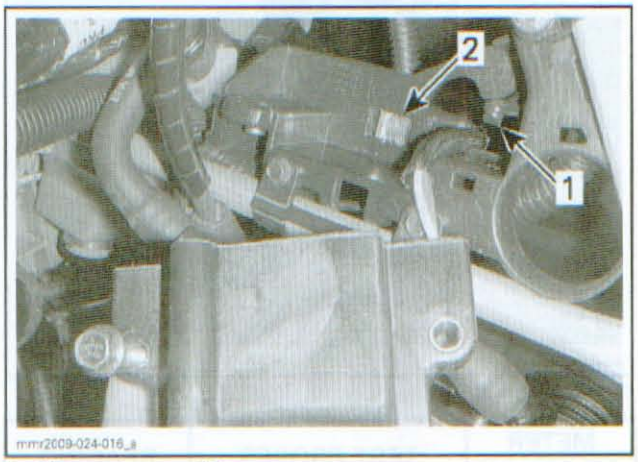

1. Lift to release coil from support
2. Remove connector retaining clip from support

MAG Coil Removal

1. Disconnect the ignition coil connector.
2. Using a small screwdriver, remove connector retaining clip from support.
3. Remove the two coil retaining screws.

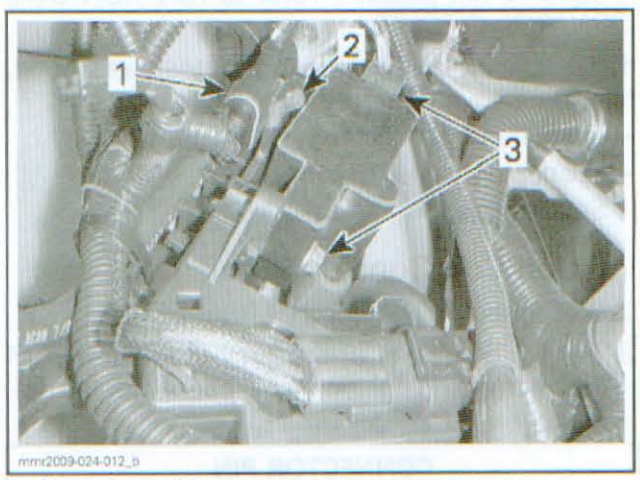

1. Disconnect coil connector
2. Remove connector retaining clip
3. Remove two mounting screws

Ignition Coil Installation

Reverse the removal procedures but pay attention to the following:

1. On the PTO coil, insert the coil connector through the coil support and install its retaining clip on the support before installing the coil.
2. Insert the PTO coil under the coil support retaining tab and slide it onto the support until the tab drops into the coil mounting hole.

www.midwestmanuals.com



1. *Insert coil connector through support*
2. *Install connector retaining clip*
3. *Lift tab and insert coil*

3. Install the retaining screw(s) and torque to 10 N•m (89 lbf•**in**) (both coils).
4. Reconnect the primary winding connectors and the spark plug cables.

NOTE: Pay attention to the position of the spark plug cables when connecting them. Lower coil connects to the PTO spark plug. Apply dielectric grease, refer to *SPARK PLUG CABLE*.

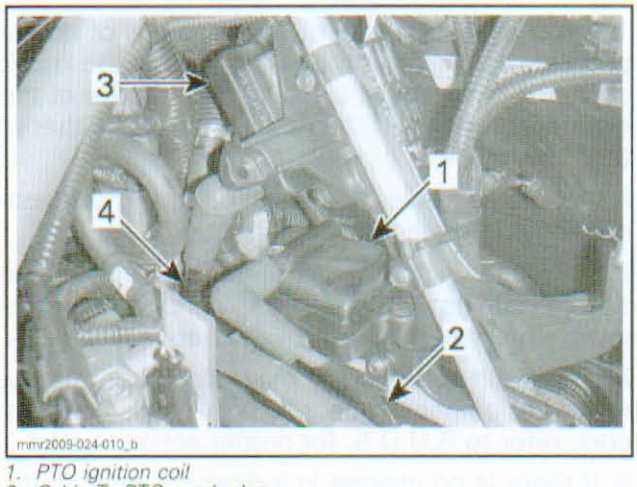

1. *PTO ignition coil*
2. *Cable To PTO spark plug*
3. *MAG ignition coil*
4. *To MAG spark plug*

⚠ WARNING

Always reconnect ignition coil cables to the same spark plugs they were disconnected from. Otherwise, severe backfire may occur with possible damage to exhaust system components.

TRIGGER COILS (500SS/600/800R)

The ECM receives a signal from each of two trigger coils which it uses for establishing spark timing.

NOTE: Both trigger coils function continuously.

1. Open RH side panel.
2. Remove acoustic panel.
3. Disconnect ECM connector.

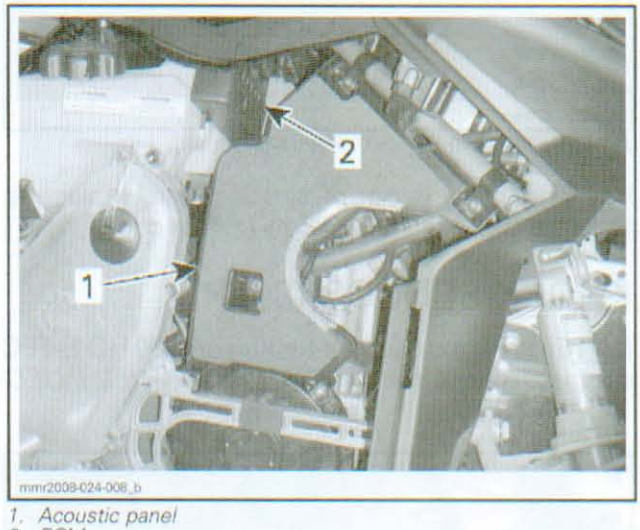

1. *Acoustic panel*
2. *ECM*

Carry out a resistance and a voltage test for each trigger coil at the ECM connector as per following table.

NOTE: The voltage test is carried out while cranking engine.

TEST	CONTINUITY		OUTPUT	
TEST PROBES	Trigger coil no. 1	Trigger coil no. 2	Trigger coil no. 1	Trigger coil no. 2
	Pin 17 and 35	Pin 18 and 36	Pin 17 and 35	Pin 18 and 36
RESISTANCE	190 to 300 Ω	190 to 300 Ω	—	—
VOLTAGE	—	—	.200 to .350 Vac	.200 to .350 Vac

www.midwestmanuals.com

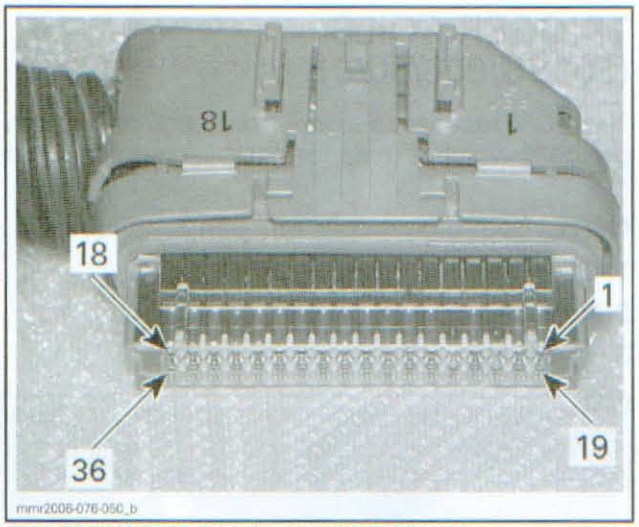

ECM CONNECTOR PIN-OUT (500SS/600/800R)

If a trigger coil is out of specification, replace it. Refer to the *MAGNETO SYSTEM* section.

KNOCK SENSOR (800R)

NOTE: For knock sensor testing on 600 HO E-TEC engine, refer to the *E-TEC DIRECT FUEL INJECTION* section.

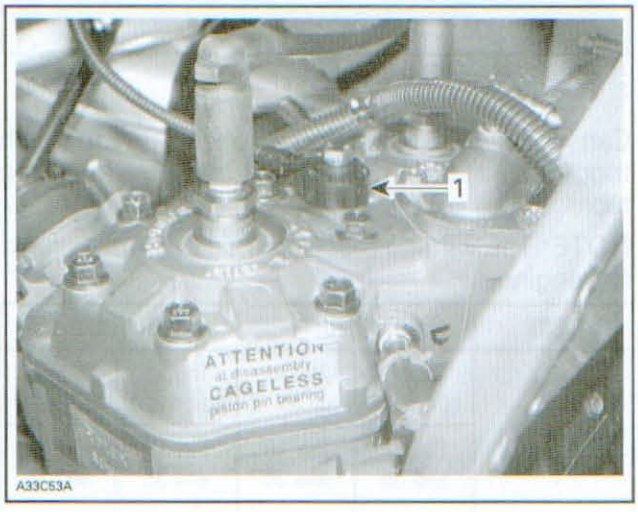

1. Knock sensor (KS)

KS Dynamic Test

1. Lift rear of vehicle off the ground and support it with a wide-base mechanical stand.
2. Connect vehicle to the latest applicable B.U.D.S. software.
3. Start the engine.
4. In B.U.D.S, choose **Read Data**, then select the **Monitoring** page tab.
5. On the bottom LH corner of the **Monitoring** page, choose the **ECM** page tab.
6. Monitor the knock sensor using the **Knock Sensor Noise Level** gauge on the RH side of the page

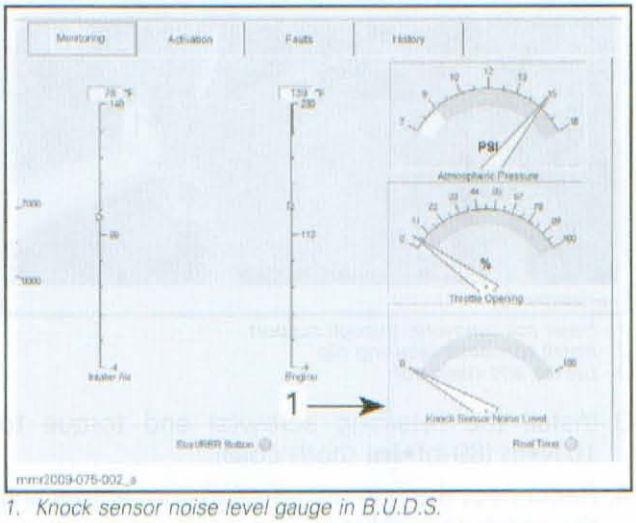

1. Knock sensor noise level gauge in B.U.D.S.

7. Bring engine speed above 5200 RPM and vary engine RPM above 5200 RPM.
8. Look for movement of the needle in the B.U.D.S. **Knock Sensor Noise Level** gauge should move between 0 and 100.

The movement pattern of the needle is of no importance as long as it moves, indicating the knock sensor is producing a signal representative of the engine vibrations. If the needle "sticks" either at 0 or 100, there is a problem.

If the needle moves as described, the knock sensor should be functioning correctly.

If the sensor indication is not normal, ensure ignition coil cables are not close to knock sensor harness. This may generate an erroneous fault code.

NOTE: Fault code P1326 may occur, but it is not related to a knock sensor failure. If this code occurs, refer to B.U.D.S. for proper action to take.

9. If there is no change in indication, refer to the following *KS CIRCUIT CONTINUITY TEST.*

KS Circuit Continuity Test

1. Ensure sensor and head contact surfaces are clean.
2. Ensure mounting bolt and washer are correct and properly torqued down.
3. Check the knock sensor circuit on wiring harness.
4. Disconnect knock sensor connector. Refer to *KNOCK SENSOR REPLACEMENT.*
5. Disconnect ECM connector.

www.midwestmanuals.com

6. Test wire continuity of circuit as per following table.

ECM CONNECTOR	KS CONNECTOR	RESISTANCE
Pin-2	Pin 1	Close to 0 Ω
Pin-20	Pin 2	

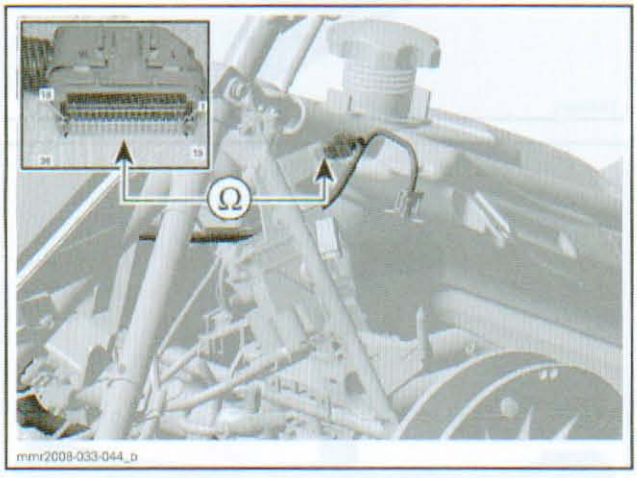

If you did not obtain close to 0 Ω, repair or replace wiring and connectors between ECM and knock sensor.

If test was good, try a new knock sensor.

KS Replacement

1. Unscrew and remove knock sensor from cylinder head.
2. Remove pulley guard. Refer to *DRIVE BELT*.
3. Remove primary air intake silencer. Refer to *AIR INTAKE SYSTEM*.
4. Disconnect knock sensor connector located above ATS.

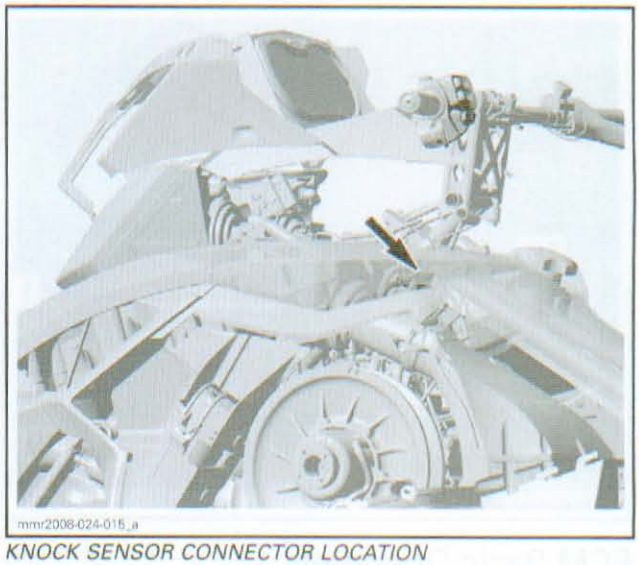

KNOCK SENSOR CONNECTOR LOCATION

5. Clean contact surface, then install new knock sensor.
6. Torque screw to 29 N•m (21 lbf•ft).

NOTICE **Improper torque may prevent proper sensor operation and lead to severe damage of internal engine components.**

7. Reconnect connector.
8. Reinstall remaining parts.

ENGINE CONTROL MODULE (500SS/600/800R)

NOTE: For engine control module (ECM) testing on 600 HO E-TEC engine, refer to the *E-TEC DIRECT FUEL INJECTION* section.

Use the latest B.U.D.S. software available from BOSSWeb for the following procedures. Refer to *COMMUNICATION TOOLS AND B.U.D.S. SOFTWARE* for proper connection instructions.

IMPORTANT: Engine-related sensors and actuators are continuously powered during engine operation. **The ECM switches, or modulates the ground applied to the sensor, or component, to complete the electrical circuits it controls.** Take this into account when troubleshooting the electrical system.

ECM Connector Pin Identification

Use the following illustration to locate the pin numbers on the ECM connector (wiring harness side) when performing tests.

www.midwestmanuals.com

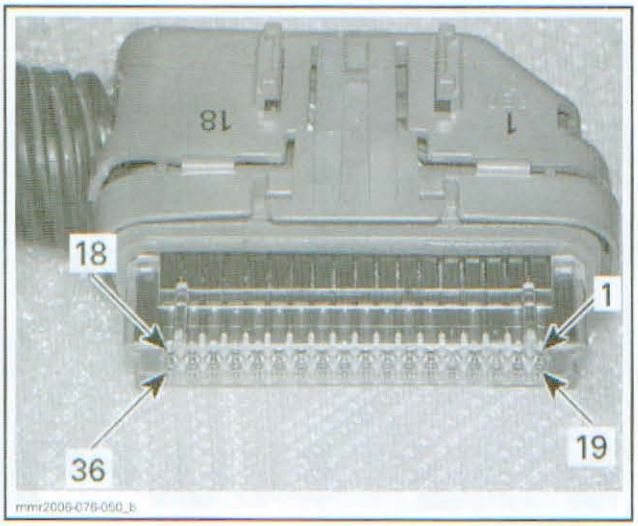

ECM Basic Operation

During engine cranking, the magneto sends AC current to the voltage regulator/rectifier, that in turn supplies the ECM with DC voltage. The ECM then supplies power to the ignition system for engine starting and operation.

When the engine reaches approximately 800 RPM, the ECM activates the battery charging relay (R2), and the accessories relay (R1), that in turn supplies the electrical loads (lights, multifunction gauge, accessories etc).

ECM Power Supply

Power (Vdc)	Pin 14
Ground	Pin 16

ECM Troubleshooting with Communication Tools

1. Connect SUPPLY HARNESS (P/N 529 035 869) to the 6-pin diagnostic connector of vehicle.
2. Connect SUPPLY CABLE (P/N 529 035 997) to supply harness.
3. Connect supply harness clips to vehicle battery. Ensure to match RED wires together and BLACK wires together.

NOTE: On manual start models, use an external 12 V battery.



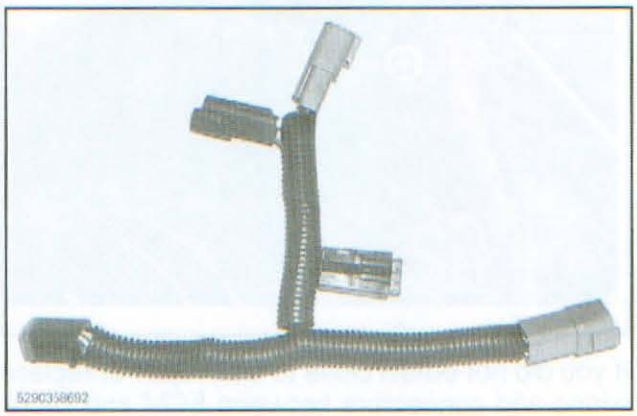

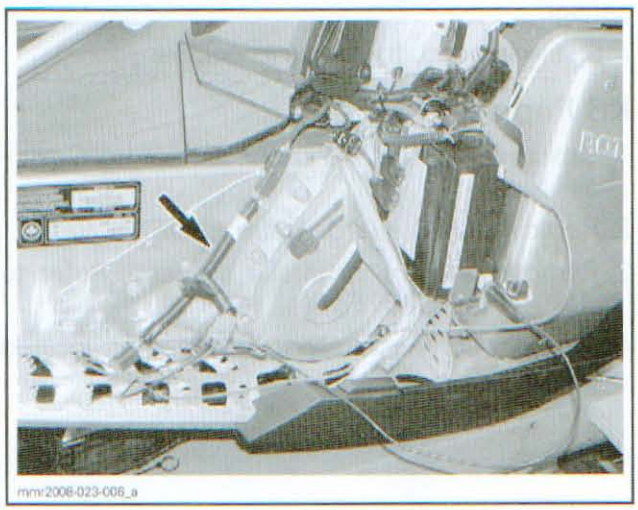

NOTICE Always use the proper supply harness and cables. Ensure to respect polarity when connecting cable clips to battery. Match RED cables together.

4. IMPORTANT: When using the supply harness, the ECM will switch to diagnostic mode and disable the ignition circuit. Engine can not be started.
5. Set engine Stop to RUN.
6. Observe multifunction gauge. The multifunction gauge should turn ON and cycle through a self-test mode.

www.midwestmanuals.com

If the gauge did not come ON and cycle through the self-test mode, refer to *LIGHTS, GAUGE AND ACCESSORIES* section.

If the gauge displayed a COMMUNICATION ERROR message, the problem may be:

- Gauge
- CAN bus
- ECM related.

Check if B.U.D.S. can communicate with the ECM.

- If B.U.D.S. can not communicate with the ECM, check the ECM power supply input and ground circuits.
- If B.U.D.S. can communicate with the ECM, look for fault codes.

ECM Power Supply Test

1. Open RH side panel.
2. Pull out diagnostic connector.



3. Use a multimeter and set it to Vdc.
4. Set engine stop switch to the STOP position.

500SS/600/800R Electric Start

The electric starter can be used for the test as follows.

5. Disconnect ORANGE/BLACK wire from the starter solenoid.

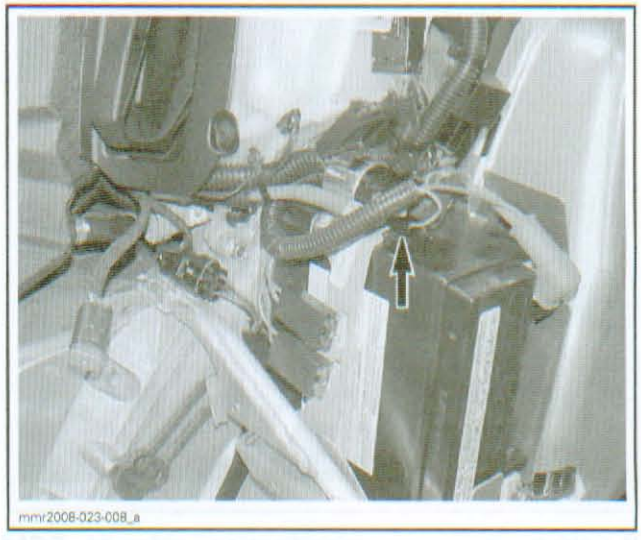

6. Install a jumper wire between the solenoid terminal and battery ground.



7. Press START/RER button to crank engine.

All 500SS/600/800R

8. While cranking engine, read voltage as follows.

MULTIMETER PROBES		VOLTAGE
Diagnostic connector pin 4	Chassis ground	Manual start: approximately 2-3 Vdc. Electric start: approximately. 6 Vdc

www.midwestmanuals.com



If voltage is as per specification, refer to *ECM GROUND CIRCUIT TEST.*

If voltage is not as per specification, refer to *ECM POWER CIRCUIT CONTINUITY TEST.*

ECM Ground Circuit Test

1. Remove muffler. Refer to *EXHAUST SYSTEM.*
2. Remove the acoustic panel.



3. Disconnect ECM connector.
4. Set multimeter to Ω.
5. Read wiring resistance as follows.

ECM CONNECTOR	RESISTANCE
Pin 16 with frame ground	Close to 0 Ω

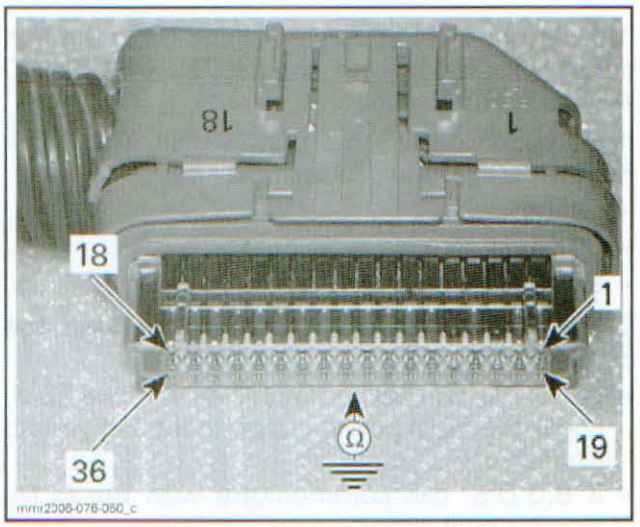

If reading is out of specification, repair or replace wiring and connectors.

If reading is as per specification, ground circuit is good. Refer to *ECM POWER CIRCUIT CONTINUITY TEST.*

ECM Power Circuit Continuity Test

NOTE: IMPORTANT: Disconnecting ECM connector and reading voltage on connector terminal would give false results. ECM connector **must be connected to ECM** to be able to read the voltage. Since it cannot be easily achieved, a continuity test will be carried out instead.

1. Disconnect ECM connector.
2. Disconnect voltage regulator/rectifier connector.

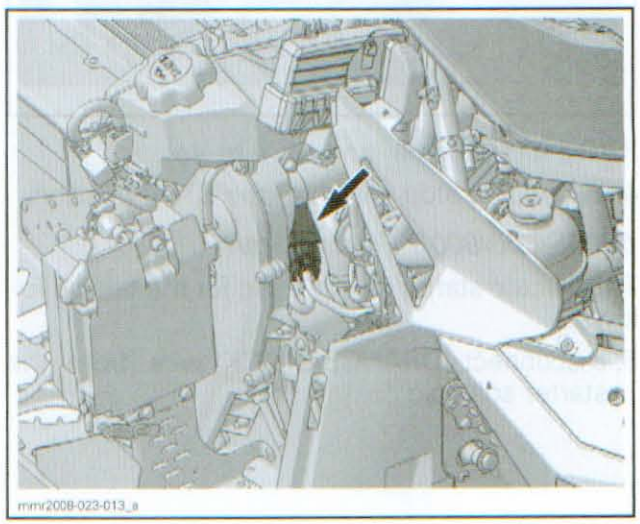

3. Set multimeter to Ω.
4. Read wiring resistance as follows.

www.midwestmanuals.com

ECM CONNECTOR	VOLTAGE REGULATOR	RESISTANCE
Pin 14	RED/BLUE	Close to 0 Ω

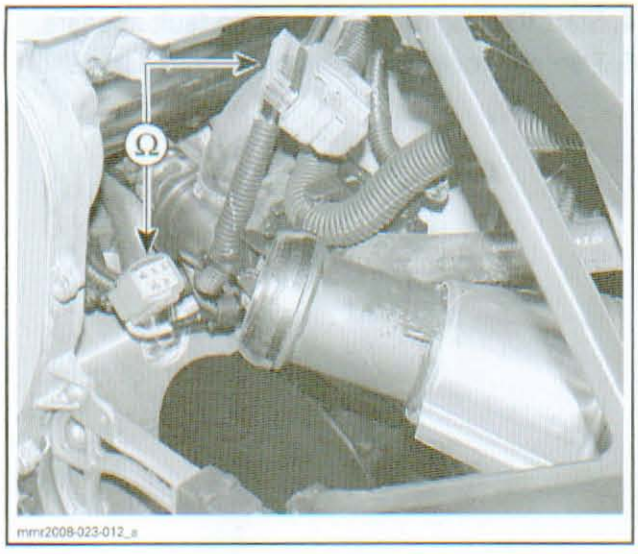

If reading is out of specification, check and repair wiring and connectors.

If reading is as per specification, check DC voltage output from voltage regulator/rectifier. Refer to *CHARGING SYSTEM*.

Reinstall removed parts.

ECM Replacement

ECM Removal

Disconnect battery cables on electric start models.

⚠ WARNING

Battery BLACK (-) cable must always be disconnected first and connected last.

Remove muffler. Refer to *EXHAUST SYSTEM*.

Remove the acoustic panel.

Cut locking ties as necessary.

Disconnect ECM connector.

Remove ECM as follows.

1. Push the LH upper tab and hold.



2. Rotate ECM counterclockwise.

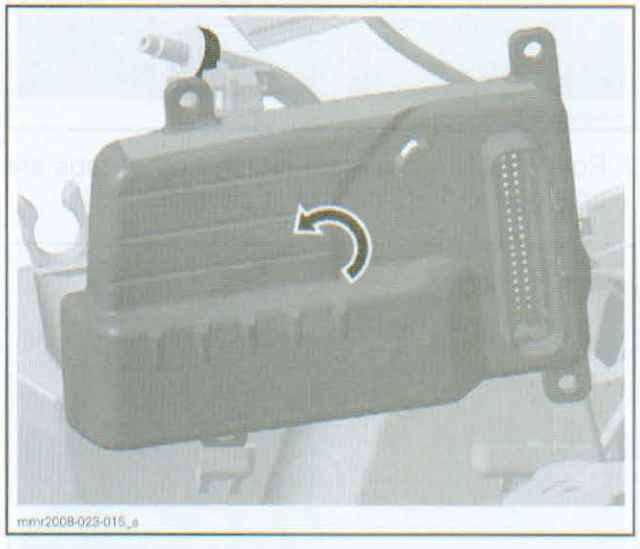

3. Pull out ECM.



www.midwestmanuals.com

ECM Installation

Install ECM as follows.

1. Insert the LH bottom tab of ECM first.

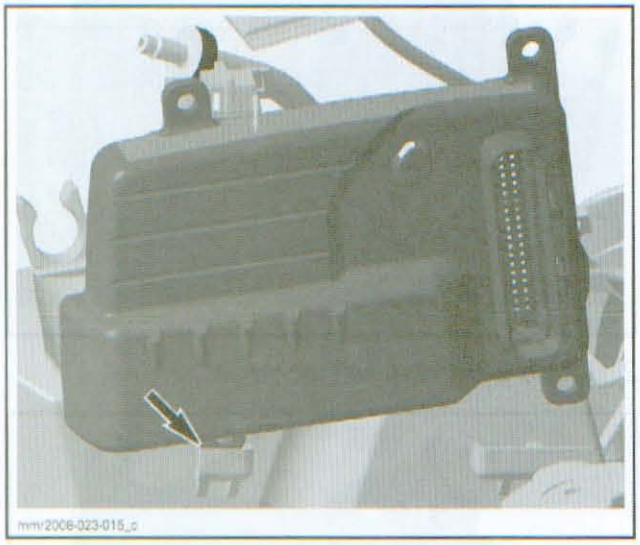

2. Rotate ECM clockwise until the other tabs are engaged and ECM locks in position.

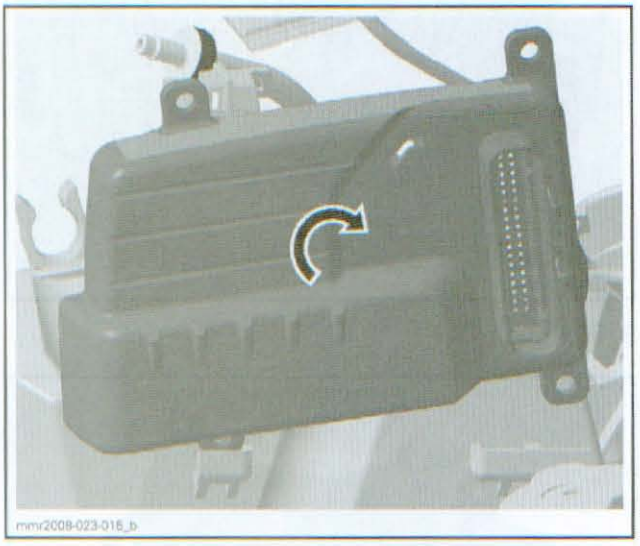

Reconnect ECM connector.

3. Reconnect battery cables (if applicable).

Connect the vehicle to the latest applicable B.U.D.S. software and carry out the following.

- Enter the proper information in **Vehicle** tab.
- Reprogram DESS key. Refer to *DESS SYSTEM*.
- Set the ignition correction. Refer to *IGNITION SYSTEM*.
- Set the cluster units. Refer to *LIGHTS/GAUGE/ACCESSORIES*.

NOTICE Pay particular attention when typing the VIN and model numbers. Once **Write Data** button is pressed, numbers cannot be modified.

4. Start the engine to be sure no fault appears.
5. Remove tools and reinstall removed parts.

www.midwestmanuals.com

CHARGING SYSTEM

SERVICE TOOLS

Description	Part Number	Page
12 VOLTS BATTERY SUPPLY CABLE	529 035 997	355, 358
FLUKE 115 MULTIMETER	529 035 868	352, 357, 359
T-HARNESS	529 035 869	355, 358

SERVICE TOOLS – OTHER SUPPLIER

Description	Part Number	Page
FLUKE RIGID BACK PROBES	TP88	359
NAPA ULTRA PRO BATTERY LOAD TESTER	95260	363

SERVICE PRODUCTS

Description	Part Number	Page
SILICONE DIELECTRIC GREASE	293 550 004	364–365

GENERAL

⚠ WARNING

Unless otherwise specified, always disconnect the magneto connector and ensure spark plugs are installed in the engine before carrying out electrical system checks on the 600 HO E-TEC. Should the engine be made to rotate with magneto connected, a spark may occur resulting in electrical shock, a fire, or an explosion.

SYSTEM DESCRIPTION

Magneto

A magneto provides the primary source of electrical energy. It transforms a magnetic field into an alternating current (AC).

500SS/600/800R Models

The magneto is comprised of a 3 phase delta wound stator that has a capacity of 360 watts.

AC current is rectified and regulated by a voltage regulator between 13.4 and 15 volts DC for primary power to the vehicle electrical system, and to charge the battery on electric start models.

600 HO E-TEC Models

The magneto is comprised of a 3 winding, single phase wound stator that has a capacity of 1200 watts.

AC current is rectified and regulated by a voltage regulator/rectifier circuit, and a DC to DC converter, both integrated within the ECM.

The charging system provides 3 outputs to the vehicle electrical system, one 55 Vdc and two 12 Vdc outputs.

Battery

A battery is installed on electric start models as a secondary power source. It is primarily used for energizing the starter. On E-TEC models, it provides power to instantly wake-up the ECM when the START/RER button is pressed.

On vehicles equipped with a high end multifunction gauge, it also provides power to maintain the clock function within the gauge.

NOTE: Never use a battery charger to temporarily substitute the battery as it may cause the ECM (engine control module) to function erratically or not at all.

TROUBLESHOOTING

NOTE: On applicable models, it is good practice to check for fault codes using B.U.D.S. software as a first troubleshooting step. Refer to *MONITORING SYSTEM/FAULT CODES.*

www.midwestmanuals.com

TROUBLESHOOTING GUIDELINES (500SS/600/800R)

Weak or Discharged Battery

Electric Start Models

If the battery is weak or discharged, check the following items:

- Charging fuse (FA)
- Charging relay (R2)
- Charging system voltage, see *DC VOLTAGE OUTPUT TEST (VOLTAGE REGULATOR)* in this section
- Battery
- Wiring and connections.

Low or No Charging System Voltage (Engine May Not Start)

Electric and Manual Start Models

If charging system voltage is low, the engine may not start, be unstable, or stall.

If there is no voltage, the engine will not start. Test the following items:

- Charging system voltage, see *DC VOLTAGE OUTPUT TEST (VOLTAGE REGULATOR)* in this section
- Magneto
- Voltage regulator/rectifier
- Wiring and connections.

TROUBLESHOOTING GUIDELINES (600 HO E-TEC)

Weak or Discharged Battery

Electric Start Models

If the battery is weak or discharged, check the following items:

- Charging fuse (FA)
- Charging relay (R2)
- Charging system voltage, see *PRIMARY 12 VDC CIRCUIT TEST WITH B.U.D.S.* in this section
- Battery
- Wiring and connections.

NOTE: If there is no primary 12 Vdc circuit output voltage, the headlights and taillight will not function.

Charging System Voltages (Engine May Not Start)

The vehicle cannot start without having a minimum voltage to the 55 V power circuit. If the engine does not start, see *VOLTAGE REGULATOR/RECTIFIER* in this section and carry out the 55 Vdc voltage output test with B.U.D.S.

If voltage is not as specified, check the following items in the recommended order until you find the fault:

- Stator (refer to *MAGNETO* section)
- Capacitor (see procedure in this section).

NOTE: The 55 Vdc may be unstable or unobtainable if the capacitor is faulty, not connected, or incorrectly connected.

If the above mentioned checks were good, isolate each of the following components by disconnecting them individually, and repeating the voltage test after each one.

- Each injector
- Each ignition coil
- Fuel pump
- Oil pump.

NOTE: When the 55 Vdc test good after a component is disconnected, replace that component and repeat the test.

PROCEDURES

CHARGING FUSE

Fuse Location

500SS/600/800R Models

A 30 A charging system fuse is located on the battery retaining plate.



TYPICAL – CHARGING SYSTEM FUSE

www.midwestmanuals.com

600 HO E-TEC Models

The charging system fuse is attached to the lower edge of the oil tank.



1. Charging system fuse

Fuse Information

The voltage regulator could be the culprit of a blown charging system fuse.

500SS/600/800R Models

To check for this, disconnect the voltage regulator from the circuit and replace the fuse. If the fuse still burns, check for a defective wire (short circuit) between the battery and the charging relay.

600 HO E-TEC Models

To check for this, carry out the *PRIMARY 12 VDC CIRCUIT TEST WITH B.U.D.S.* in this section. Also check for an applicable fault code, refer to *MONITORING SYSTEM AND FAULT CODES*.

CHARGING RELAY (R2)

A charging relay (R2), completes the charging circuit between the voltage regulator output and the battery. It receives its ground control signal from the ECM. Refer to *WIRING DIAGRAM* for more details.

500SS/600/800R Models

The ECM provides the ground to the relay at approximately 800 RPM.

600 HO E-TEC Models

The ECM provides the ground at 1900 RPM, plus 4 seconds.

Charging Relay Location

500SS/600/800R Models

The charging relay is a plug-in relay located next to the battery on a harness connector.

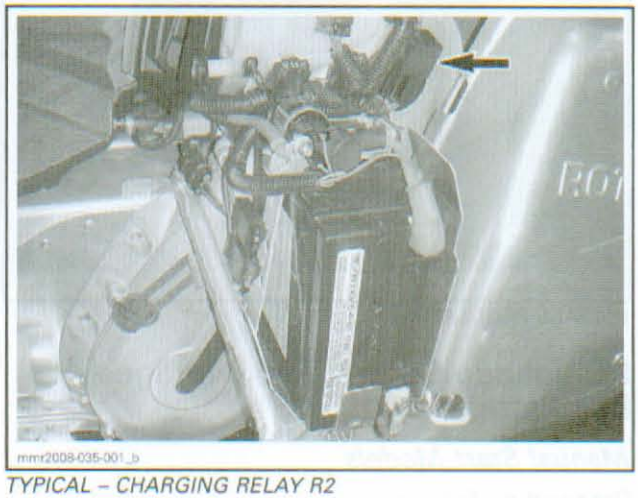

TYPICAL – CHARGING RELAY R2

600 HO E-TEC Models

The charging relay is a plug-in relay attached to the main harness routed behind the oil tank. It can be easily accessed by removing the primary air intake silencer.

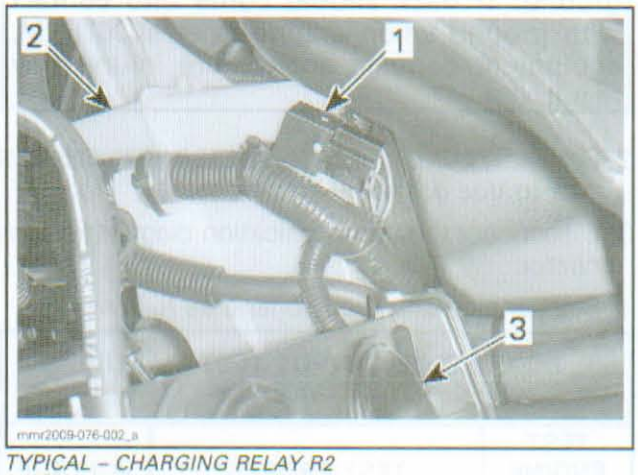

TYPICAL – CHARGING RELAY R2
1. Charging relay
2. Oil tank
3. Throttle body air inlet adapter

VOLTAGE REGULATOR/RECTIFIER (500SS/600/800R)

Voltage Regulator Continuity Test

Due to internal circuitry, there is no static test available to check continuity.

www.midwestmanuals.com



VOLTAGE REGULATOR

DC Voltage Output Test (Voltage Regulator)

Manual Start Models

Proceed as follows:

1. Raise vehicle and ensure the track is off the ground and can turn freely.

⚠ WARNING

Ensure vehicle track is completely raised off ground. If track should come into contact with ground when engine is at 5000 RPM, equipment damage and severe injury may result.

2. Set the FLUKE 115 MULTIMETER (P/N 529 035 868) to Vdc scale.
3. Disconnect the communication diagnostic connector.
4. Start engine and read voltage as follows.

DC VOLTAGE OUTPUT TEST MANUAL START MODELS			
TEST ENGINE SPEED	TEST PROBES		VOLTAGE
5000 RPM	Pin 4 (RED/BLUE wire) (diagnostic connector)	Chassis ground	15.1 Vdc ± 0.5

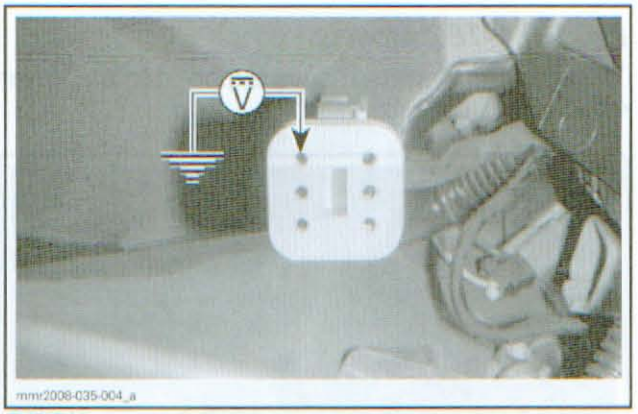

TYPICAL

If voltage is above specification, replace voltage regulator.

If voltage is below specification, check stator and wiring/connections.

If the stator and associated wiring/connectors test good, try a new voltage regulator.

Electric Start Models

Proceed as follows:

1. Raise vehicle and ensure the track is off the ground and can turn freely.

⚠ WARNING

Ensure vehicle track is completely raised off ground. If track should come into contact with ground when engine is at 5000 RPM, equipment damage and severe injury may result.

2. Remove RED rubber boot protector from positive battery post.
3. Set multimeter to Vdc scale.
4. Connect multimeter to battery posts.
5. Start engine and read voltage as follows.

DC VOLTAGE OUTPUT TEST ELECTRIC START MODELS			
TEST ENGINE SPEED	TEST PROBES		VOLTAGE
5000 RPM	Battery (+)	Battery (-)	15.1 Vdc ± 0.5

www.midwestmanuals.com

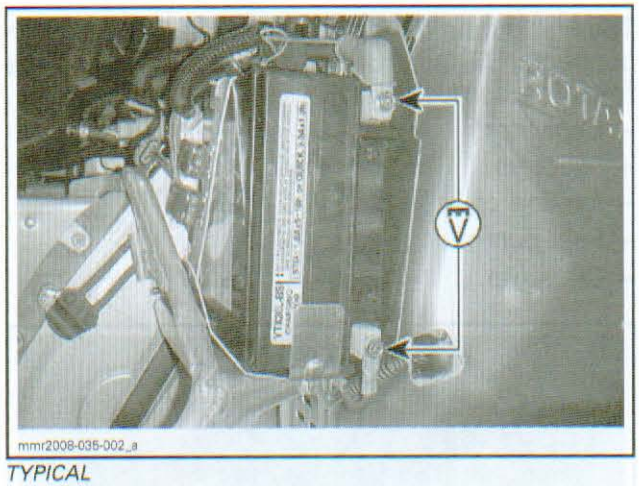

TYPICAL

If voltage is above specification, replace voltage regulator.

If voltage is below specification, check stator and wiring/connections.

Voltage Regulator Removal

1. Disconnect battery (if so equipped).

NOTE: The voltage regulator is located on the right side of the frame just ahead of the fuel tank, and under the oil tank.

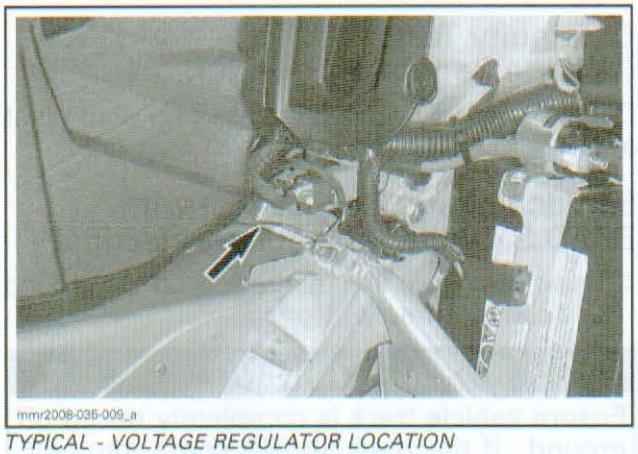

TYPICAL - VOLTAGE REGULATOR LOCATION

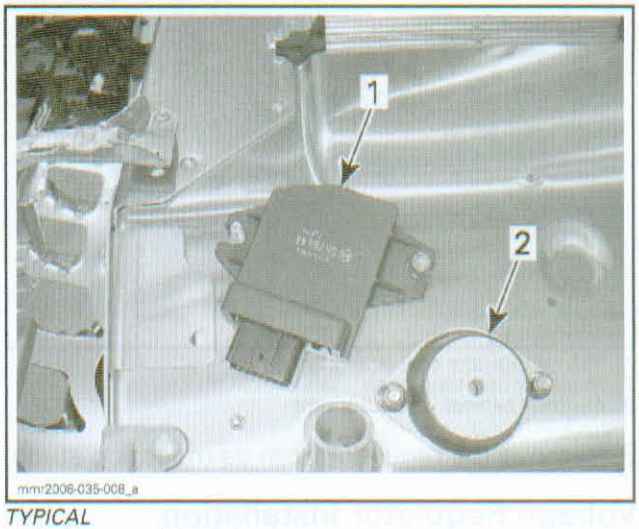

TYPICAL
1. *Voltage regulator*
2. *RH rear engine mount*

2. Remove the primary air intake silencer.
3. Disconnect the carburetors from the intake adapters.
4. Move fuel tank back, refer to *FUEL TANK/FUEL PUMP* section.
5. Disconnect the voltage regulator connector.

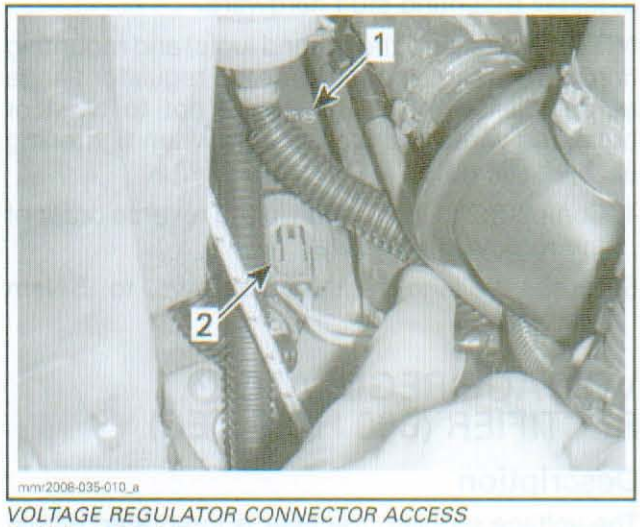

VOLTAGE REGULATOR CONNECTOR ACCESS
1. *Voltage regulator*
2. *Voltage regulator connector*

NOTE: The regulator connector can be accessed from the front right side, by removing the muffler and the acoustic panel.

6. Loosen the RH elastic nut.
7. Remove the LH elastic nut, star washer and flat washer.

NOTE: Note the position of the grounding wire, star washers and flat washers for installation.

www.midwestmanuals.com

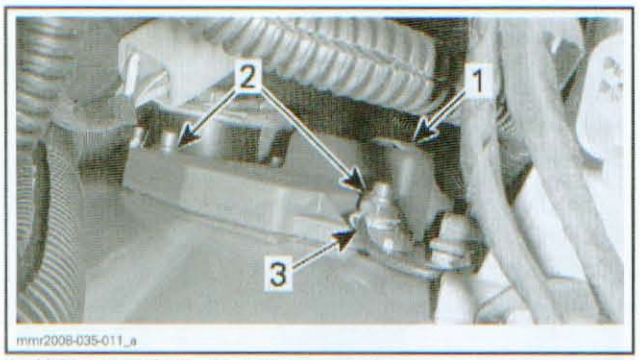

1. Voltage regulator connector
2. Regulator mounting studs
3. Electrical harness grounding wire

8. Remove the regulator from its mounting studs.

Voltage Regulator Installation

1. Insert the right flange of the regulator on its mounting stud, under the elastic nut, grounding wire and washers.

NOTE: Ensure the connector is facing forward and that all the hardware is positioned over the regulator flange.

2. Insert the LH side of the regulator on its mounting stud.
3. Install mounting stud hardware.

NOTE: Make sure the ground lug(s) and mounting hardware are positioned over the regulator flange as per disassembly. Be careful not to twist or break the wires and ground lugs when tightening each elastic nuts.

4. Complete the installation in the reverse order of the removal procedure.
5. Torque voltage regulator screws to 5 N•m (44 lbf•**in**).

VOLTAGE REGULATOR/ RECTIFIER (600 HO E-TEC)

Description

The voltage regulator/rectifier is integrated within the ECM. It receives three single phase alternating current (AC) inputs from the magneto which it rectifies and regulates to 55 Vdc.

On a single pull start with the engine between 250 and 500 RPM, the magneto, combined with an ingenious series/parallel switching capability of the voltage regulator/rectifier, is capable of producing 55 Vdc. This 55 Vdc is then divided into two outputs.

The first output (55 Vdc), leaves the ECM through connector J2 (pin 13) and provides power to the following components.

- Capacitor
- Injectors
- Ignition coils
- Fuel pump
- Oil pump.

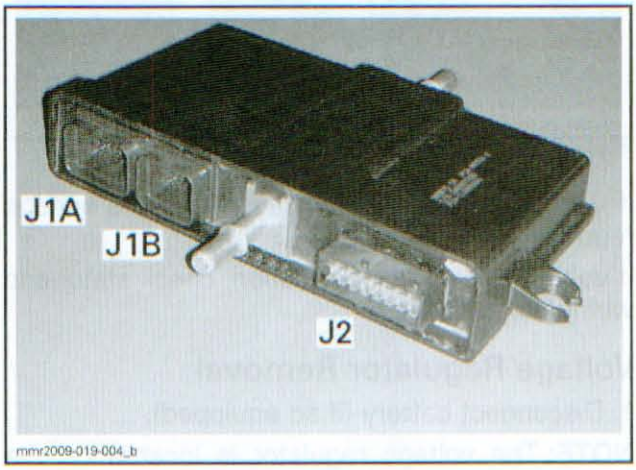

The second output (55 Vdc) feeds a DC to DC converter within the ECM.

Continuity Test (Voltage Regulator/Rectifier)

Due to internal circuitry, there is no static test available to check continuity.

55 Vdc Voltage Output Test with B.U.D.S. (Voltage Regulator/Rectifier)

1. Raise vehicle so that the track is off the ground and can turn freely.

⚠ WARNING

Ensure vehicle track is completely raised off ground. If the track should come into contact with the ground when the engine is at 5000 RPM, equipment damage and severe injury may result.

2. Remove RH side panel, refer to *BODY* section.
3. Connect to the latest B.U.D.S. software applicable to the 600 HO E-TEC from BOSSWeb. Refer to *COMMUNICATION TOOLS/B.U.D.S. SOFTWARE* section.

www.midwestmanuals.com

Procedure when Engine Cannot be Started

Manual Start Models

1. Install the following tools to supply power to the 12 Vdc circuits and the 55 Vdc circuit for this test. Refer to *COMMUNICATION TOOLS AND B.U.D.S. SOFTWARE* section for proper connections.
   - T-HARNESS (P/N 529 035 869)
   - 12 VOLTS BATTERY SUPPLY CABLE (P/N 529 035 997)
   - 12 volts battery.
2. In B.U.D.S., select **Read Data**.
3. Select the **Monitoring** tab.
4. At the bottom of the monitoring page, select the **ECM** tab.
5. Crank the engine using the rewind starter.
6. Read the voltage on the **System Voltage** meter in B.U.D.S. as the engine is turning over.

55 VDC VOLTAGE OUTPUT TEST	
TEST ENGINE SPEED	VOLTAGE
Pull start (engine not running)	At least 30 Vdc

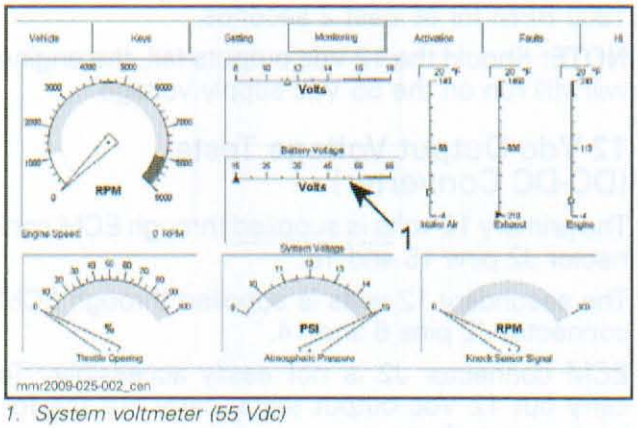

1. System voltmeter (55 Vdc)

If you cannot obtain the specified voltage, refer to *TROUBLESHOOTING* in this section and carry out the required tests.

Also carry out the *VOLTAGE REGULATOR/ RECTIFIER GROUND CIRCUIT TEST* in this section.

Electric Start Models

1. Connect T-HARNESS (P/N 529 035 869) to the vehicle before connecting it to the latest applicable B.U.D.S. software. Refer to *COMMUNICATION TOOLS AND B.U.D.S. SOFTWARE* section.

NOTE: Pressing the START/RER button momentarily will power the ECM (wake up signal) to allow B.U.D.S. to read the ECM prior to engine cranking for the test.

2. In B.U.D.S., select **Read Data**.
3. Select the **Monitoring** tab.
4. At the bottom of the monitoring page, select the **ECM** tab.
5. Crank the engine over by pressing and holding the START/RER button for a few seconds.
6. Read the voltage on the **System Voltage** meter in B.U.D.S. as the engine is being cranked.

NOTICE **Do not hold the START/RER button more than 10 seconds. A rest period should be observed between the cranking cycles to let the starter cool down. Holding the START/RER button for extended periods could overheat and permanently damage the starter.**

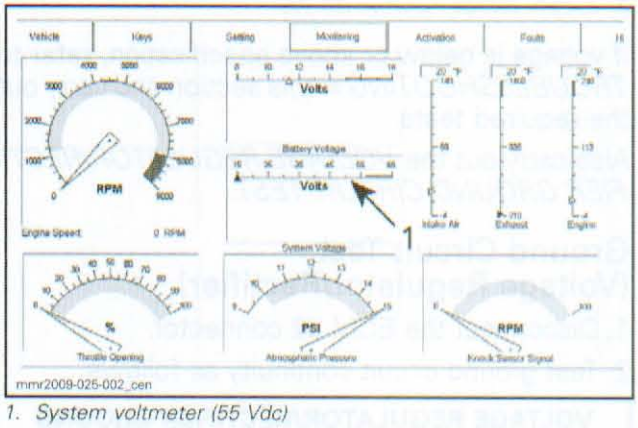

1. System voltmeter (55 Vdc)

7. Refer to the *55 VDC VOLTAGE OUTPUT TEST* table in the previous *MANUAL START MODELS* for specifications.

Procedure With Engine Running

1. Connect vehicle to the latest applicable B.U.D.S. software, refer to *COMMUNICATION TOOLS AND B.U.D.S. SOFTWARE* section.
2. Start engine.
3. In B.U.D.S., select **Read Data**.
4. Select the **Monitoring** tab.
5. At the bottom of the **Monitoring** page, select the **ECM** tab.
6. Read the voltage on the **System Voltage** meter in B.U.D.S.

www.midwestmanuals.com

55 VDC VOLTAGE OUTPUT TEST (ENGINE RUNNING)	
TEST ENGINE SPEED	VOLTAGE
Any RPM from idle and above	55 Vdc ± 2

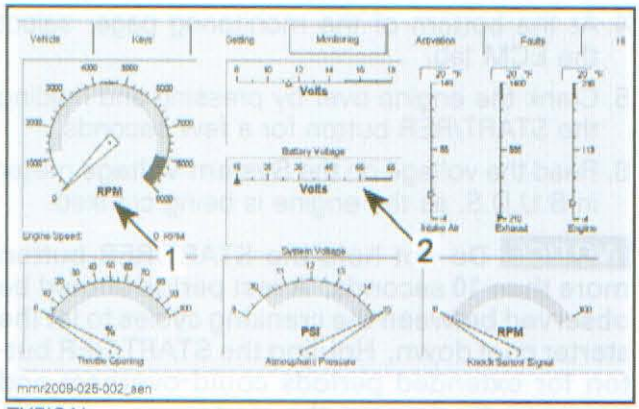

TYPICAL
1. *RPM indication*
2. *System voltage indication (55 Vdc)*

If voltage is below or above specification, refer to *TROUBLESHOOTING* in this section and carry out the required tests.

Also carry out the *VOLTAGE REGULATOR/RECTIFIER GROUND CIRCUIT TEST.*

Ground Circuit Test (Voltage Regulator/Rectifier)

1. Disconnect the ECM J2 connector.
2. Test ground circuit continuity as follows.

VOLTAGE REGULATOR/RECTIFIER GROUND CIRCUIT TEST	
ECM J2 CONNECTOR	
Pin 5	Chassis ground
Pin 7	
Pin 8	

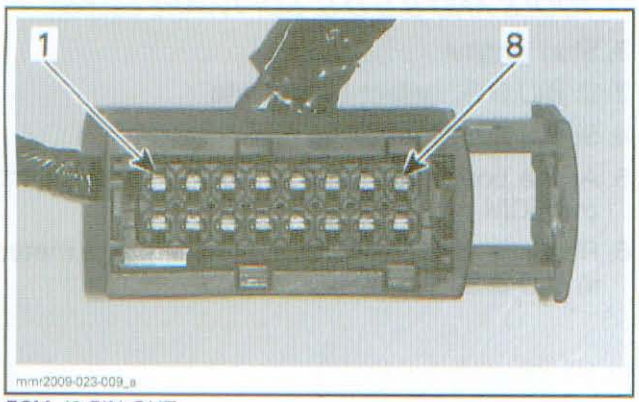

ECM J2 PIN-OUT

DC-DC CONVERTER (600 HO E-TEC)

Description

The DC-DC converter is integrated within the ECM. It receives 55 Vdc from the voltage regulator/rectifier which, it steps down to 12 Vdc. This 12 Vdc power is then split into two separate circuits, a primary and a secondary 12 Vdc output.

Primary 12 Vdc Output

From approximately 800 RPM and 50 V from the voltage regulator, the primary 12 Vdc output provides power to the following:

- ECM
- Multifunction gauge
- 3D RAVE valve solenoid
- Lighting system.

NOTICE **The 12 Vdc primary circuit is not to be used to power accessory loads. All accessories are to be powered from the secondary 12 Vdc circuit.**

Secondary 12 Vdc Output

The secondary 12 Vdc output provides power to the accessories when the engine reaches 1900 RPM for at least 2 seconds.

NOTE: Should the 12 Vdc outputs fail, the engine will still run on the 55 Vdc supply voltage.

12 Vdc Output Voltage Tests (DC-DC Converter)

The primary 12 volts is supplied through ECM connector J2 pins 15 and 16.

The secondary 12 volts is supplied through ECM connector J2 pins 6 and 14.

ECM connector J2 is not easily accessible. To carry out 12 Vdc output tests, carry out the following procedures.

Primary 12 Vdc Circuit Test with B.U.D.S.

1. Remove RH side panel, refer to *BODY* section.
2. Connect to the latest B.U.D.S. software applicable to the 600 HO E-TEC from BOSSWeb. Refer to *COMMUNICATION TOOLS/B.U.D.S. SOFTWARE* section.
3. Raise vehicle so that the track is off the ground and can turn freely.

www.midwestmanuals.com

⚠ WARNING

Ensure vehicle track is completely raised off ground. If the track should come into contact with the ground when the engine is at 5000 RPM, equipment damage and severe injury may result.

4. Start engine.
5. In B.U.D.S., select **Read Data**.
6. Select the **Monitoring** tab.
7. At the bottom of the **Monitoring** page, select the **ECM** tab.
8. Read the primary 12 Vdc system voltage on the **Battery Voltage** meter in B.U.D.S.

PRIMARY 12 VDC CIRCUIT TEST WITH B.U.D.S.	
TEST ENGINE SPEED	VOLTAGE
Any RPM from 1100 RPM and above	14.75 Vdc ± .5

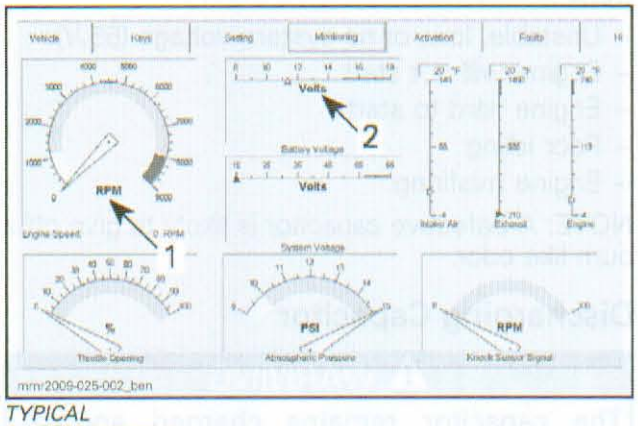

TYPICAL
1. *RPM indication*
2. *Primary 12 Vdc indication (battery)*

If voltage is above specification, replace ECM.

If voltage is below specification, check the 55 Vdc. Refer to *VOLTAGE REGULATOR/RECTIFIER*.

Also carry out the *VOLTAGE REGULATOR/RECTIFIER GROUND CIRCUIT TEST* in this section.

Install all removed parts and connectors.

Secondary 12 Vdc Circuit Test

The secondary 12 Vdc system is not monitored in B.U.D.S.

To test the secondary 12 Vdc system, carry out the following procedure.

1. Remove multifunction gauge to access HG connector.

NOTE: Do not disconnect gauge or HG connector.

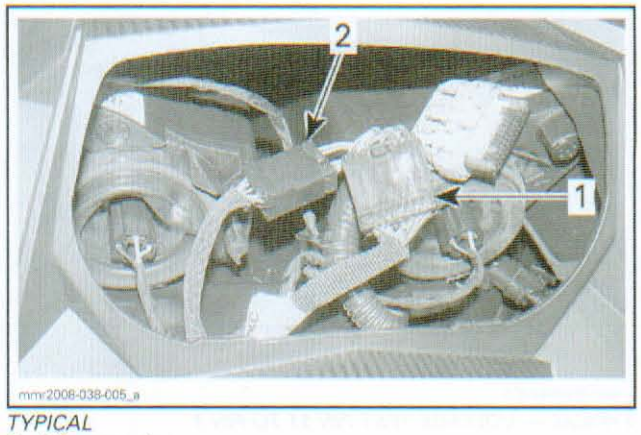

TYPICAL
1. *HG connector*
2. *AC connector*

2. Raise vehicle so that the track is off the ground and can turn freely.

⚠ WARNING

Ensure vehicle track is completely raised off ground. If the track should come into contact with the ground when the engine is at 5000 RPM, equipment damage and severe injury may result.

3. Set FLUKE 115 MULTIMETER (P/N 529 035 868) to Vdc scale.
4. Start the engine.
5. Accelerate the engine above 1900 RPM and hold for at least 2 seconds.
6. To measure the secondary 12 Vdc, back-probe the HG connector as follows.

ENGINE SPEED	BACK-PROBE HG CONNECTOR		VOLTAGE
Over 1900 RPM + 2 sec.	Red test probe	Black test probe	14.75 Vdc ± .5
	Pin 11	Chassis ground	
	Pin 11	Pin 1	

www.midwestmanuals.com

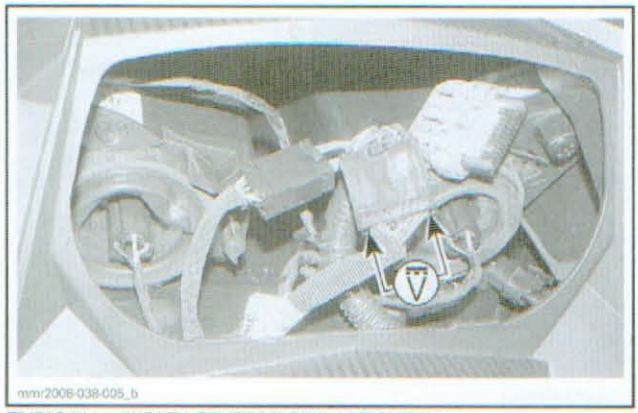

TYPICAL — VOLTAGE TEST PIN 11 TO PIN 1

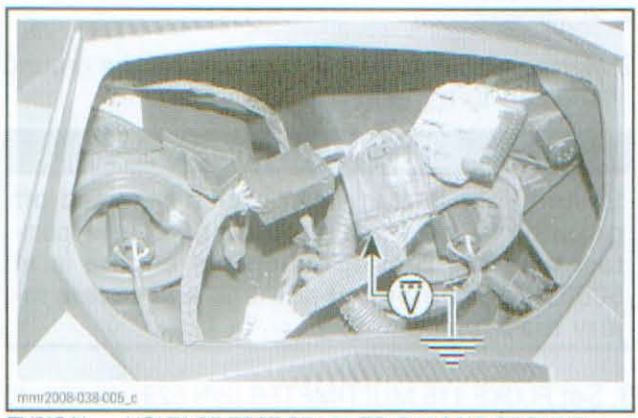

TYPICAL — VOLTAGE TEST PIN 11 TO CHASSIS GROUND

If the secondary 12 Vdc voltage is as specified to chassis ground, but not present when measuring between pins 11 and 1, test continuity of BLACK wire to ground.

If voltage cannot be measured, test continuity of RED/YELLOW wire from pin 11 of HG connector to pins 6 and 14 of ECM J2 connector.

If the RED/YELLOW wire continuity is good and other voltages from ECM tested good, ECM may not output secondary 12 Vdc.

Carry out the *VOLTAGE REGULATOR/RECTIFIER GROUND CIRCUIT TEST*. If the ground circuit tests good, the ECM will need to be replaced.

NOTE: Before replacing ECM, all ECM grounds, power output circuits, and input circuits from the magneto must be tested.

Repair or replace as applicable.

CAPACITOR (600 HO E-TEC)

The engine fuel injectors, which require 55 Vdc for their operation, are particularly sensitive to voltage variations. A capacitor is connected to the 55 Vdc electrical system to stabilize the system voltage.

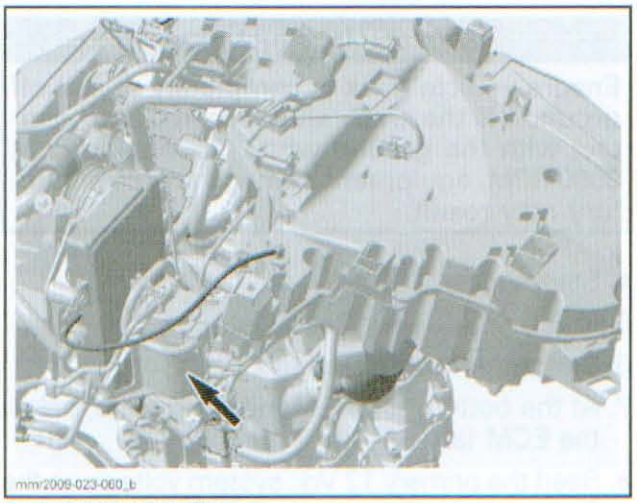

CAPACITOR LOCATION

The capacitor is located on the RH side of the vehicle, just ahead of the ECM.

Quick Troubleshooting

A faulty capacitor will lead to the following symptoms:

- Unstable, low, or no system voltage (55 V).
- Engine will not start
- Engine hard to start
- Poor idling
- Engine misfiring.

NOTE: A defective capacitor is likely to give off a burn like odor.

Discharging Capacitor

⚠ WARNING

The capacitor remains charged approximately 10 seconds after engine is stopped. A high energy could suddenly be discharged if capacitor terminals were shorted. Always discharge capacitor before servicing.

To properly discharge capacitor, leave it connected for at least 10 seconds after engine has been stopped, or after engine was last cranked before carrying out any maintenance procedure on the capacitor or 55 volt electrical system.

Capacitor Charge Hold Test

1. Connect the following tools to power 55 Vdc system for capacitor charging:
   - T-HARNESS (P/N 529 035 869)
   - 12 VOLTS BATTERY SUPPLY CABLE (P/N 529 035 997)
   - 12 V battery.

www.midwestmanuals.com

2. Use a FLUKE 115 MULTIMETER (P/N 529 035 868) set to Vdc to measure the capacitor charge voltage.

NOTE: Ensure to use the multimeter RED probe with the WHITE/RED wire.

3. Back-probe capacitor connector using the FLUKE RIGID BACK PROBES (P/N TP88).

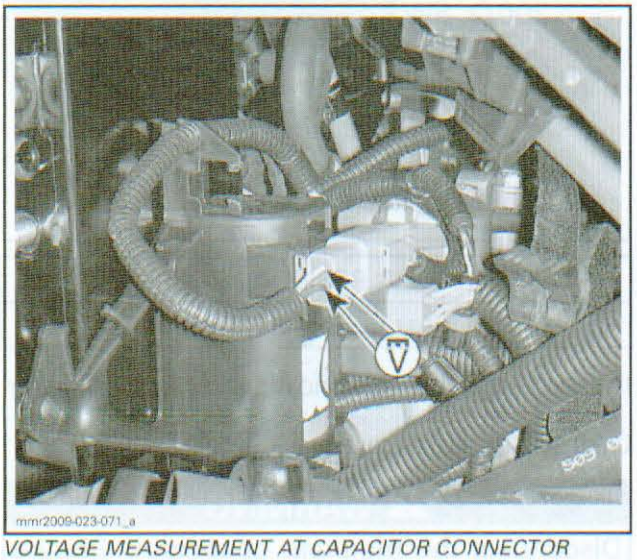

VOLTAGE MEASUREMENT AT CAPACITOR CONNECTOR

4. Read and note capacitor charge voltage with battery power applied.
5. Disconnect capacitor connector.
6. Wait 5 minutes.
7. Read capacitor charge voltage again.

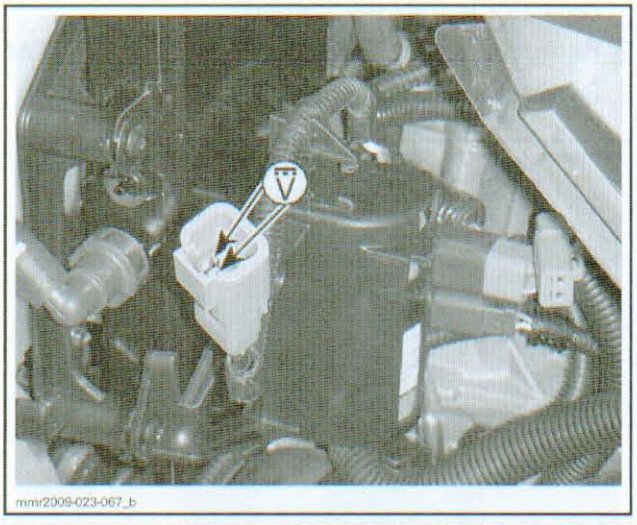

CAPACITOR CHARGE HOLD TEST
Capacitor Vdc must be within 1 Vdc of battery Vdc after 5 minutes

If voltage is out of specification, replace capacitor.

If in doubt, proceed with the following residual voltage test.

Capacitor Residual Voltage Test

⚠ WARNING

Disconnect the magneto connector. Should the engine be made to rotate with magneto connected, a spark may occur resulting in electrical shock, a fire or an explosion.

1. Disconnect magneto connector.
2. Remove capacitor from vehicle and carry out the following test on a non metallic workbench.
3. Connect the following items to the capacitor, see following illustration.
   - A switch
   - Resistor (300 Ω/5 W)
   - 12 V battery (fully charged).

NOTICE **Ensure the test switch is in the OFF position when connecting the battery to the capacitor to prevent sparking or electrical shock.**

⚠ WARNING

Be sure to connect the battery POSITIVE post to the capacitor POSITIVE terminal.

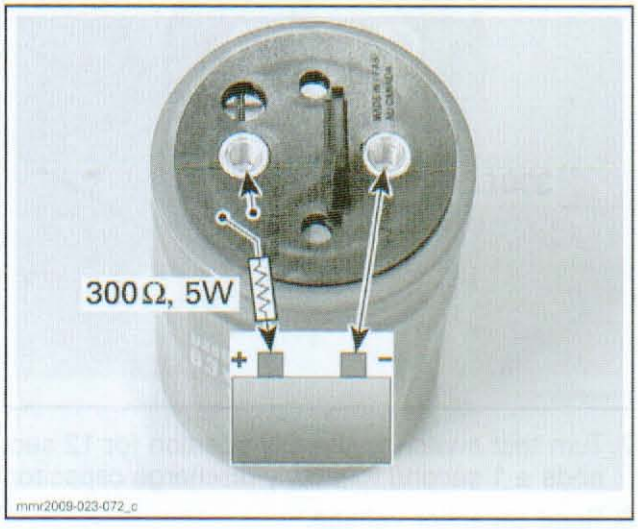

4. Turn switch to **ON** and read capacitor voltage. Wait until voltage reaches 12 V to ensure the capacitor is fully charged.

www.midwestmanuals.com

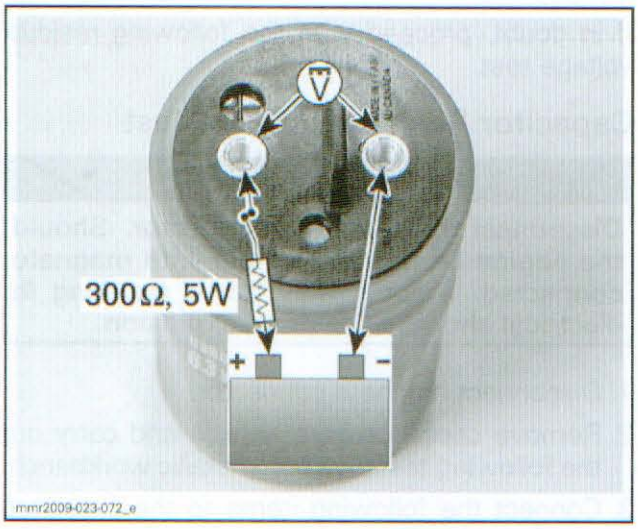

5. Turn test switch to **OFF**.

NOTE: Carry out the following steps within the following minute to ensure the capacitor does not begin to discharge before the test.

6. Remove battery from circuit and connect the resistor and switch across capacitor terminals.

NOTICE **Ensure test switch is in the OFF position during the circuit configuration change.**

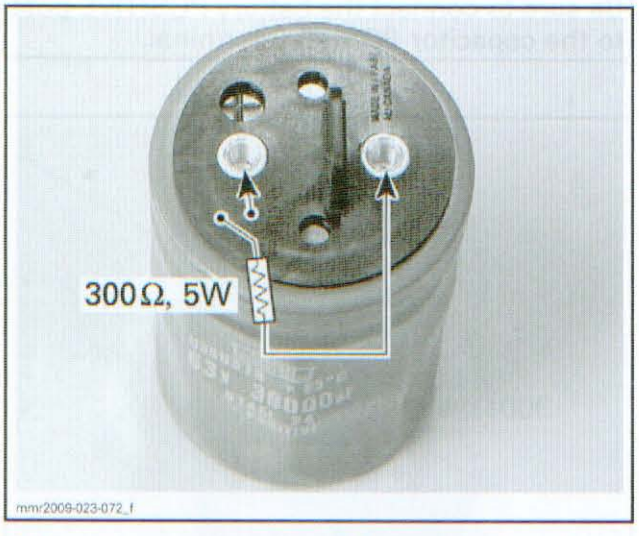

7. Turn test switch to the **ON** position for 12 seconds ± 1 second to slowly discharge capacitor.
8. Read capacitor voltage.

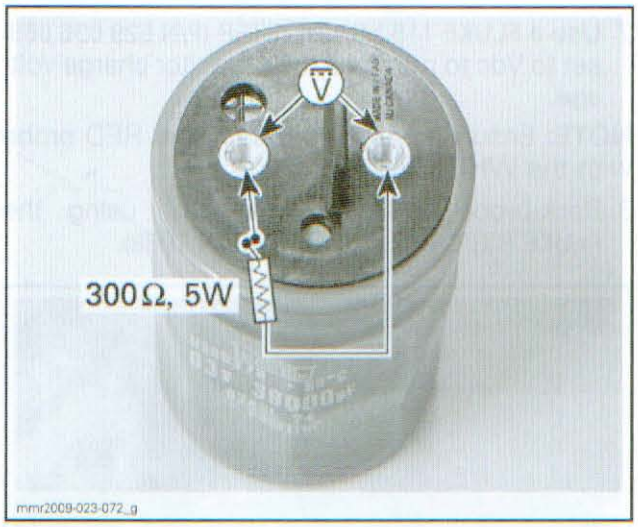

CAPACITOR RESIDUAL VOLTAGE
Must be above 2.6 Vdc

If voltage is out of specification, replace capacitor.

Capacitor Removal

⚠ WARNING

Disconnect the magneto connector. Should the engine be made to rotate with magneto connected, a spark may occur resulting in electrical shock, a fire or an explosion.

1. Ensure capacitor remained connected for at least 10 seconds after engine shut down, or after engine was last cranked. This ensures capacitor is fully discharged.
2. Remove muffler. Refer to *EXHAUST SYSTEM*.
3. Remove acoustic panel.

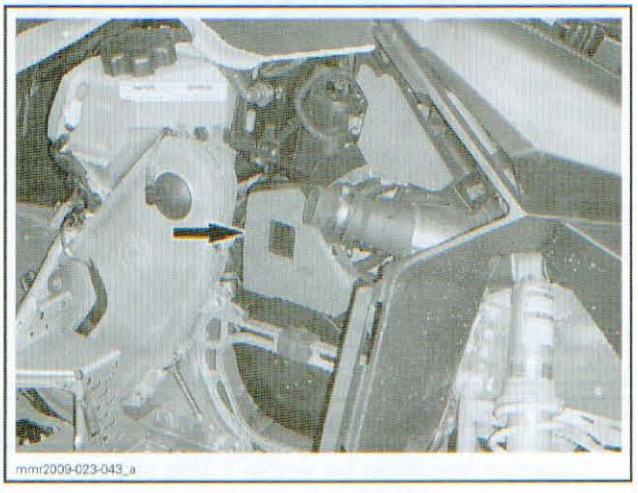

4. Remove retaining screws from capacitor support cover.

www.midwestmanuals.com



5. Pull capacitor support cover open.

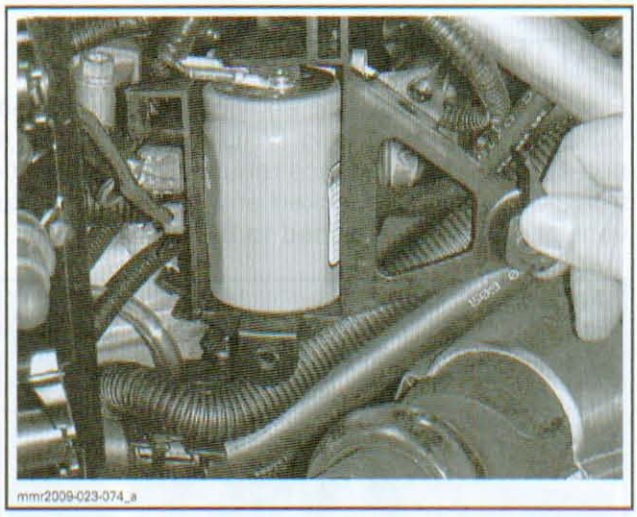

6. Pull capacitor out of support and remove terminal screws.

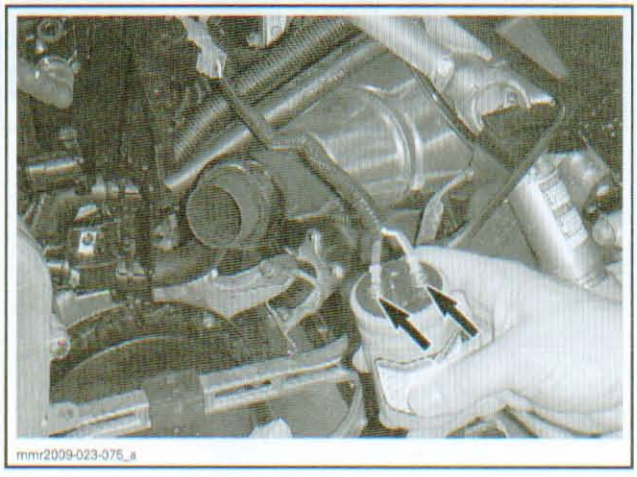

⚠ WARNING

Do not remove plastic protector from top of capacitor unless the capacitor is to be replaced. The cover prevents the two capacitor contacts from being easily shorted together which may cause a spark, possibly resulting in a fire.

7. Check inspection hole on top of capacitor.



INSPECTION HOLE (SHIELD IS INTACT)

If the top shield is open (pierced), replace capacitor.

NOTE: The following illustration shows a perforated shield with capacitor fluid leakage. This capacitor was connected in reverse polarity.

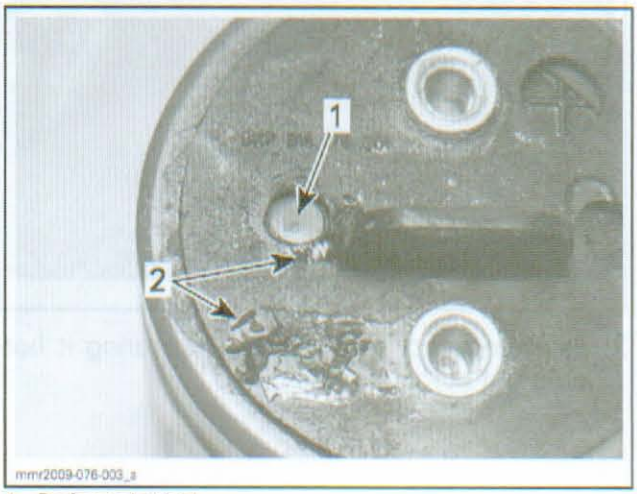

1. *Perforated shield*
2. *Capacitor fluid leakage*

Capacitor Installation

1. If capacitor was replaced, install a plastic protector cap on new capacitor.

www.midwestmanuals.com

NOTE: When reinstalling plastic protector, ensure the + sign on top of capacitor is visible through the hole in protector. If + sign is not visible, pull off protector, rotate it one half turn, then reinstall it.


mmr2009-023-072_a

2. Connect wire terminals to capacitor. Ensure to connect the WHITE/RED wire to the + terminal on capacitor. Position wires so as to route them away of the + sign.

NOTICE Improper polarity could destroy the capacitor while in operation.

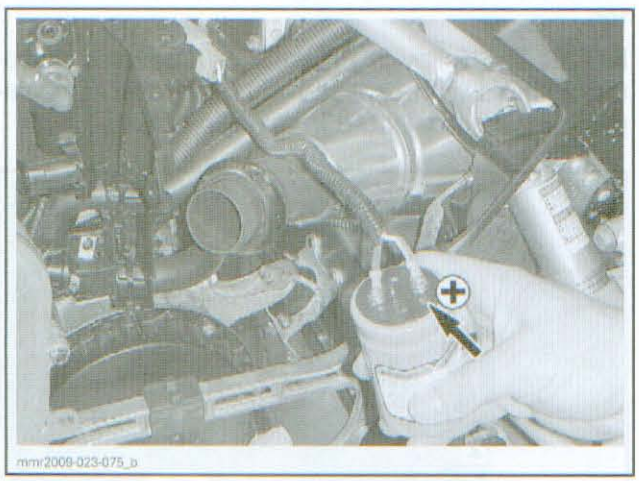
mmr2009-023-075_b

3. Insert capacitor in its support ensuring it bottoms out completely.

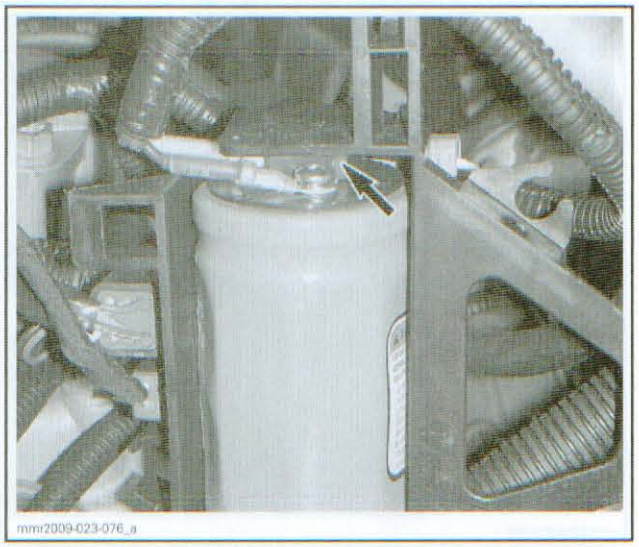
mmr2009-023-076_a

4. Complete assembly of remaining parts in the reverse order of removal.

BATTERY (YTX20L-BS)

Electric start models are equipped with a sealed valve regulated lead acid (VRLA) battery. It is a non-spillable, maintenance reduced type (no electrolyte level to be checked and readjusted). No ventilation tube is attached to the battery.


mmr2008-035-001

TYPICAL

www.midwestmanuals.com

Battery Testing

Battery Voltmeter Test (No Load Applied)

NOTE: An unloaded voltmeter test is carried out on a battery without discharging current. It is the simplest and most commonly used. However, be aware that a voltage test can indicate that the battery is in good condition even though the battery does not have enough power to crank the engine. A voltage reading provides an instant indication of the state of charge of the battery, not of its current storage capacity. A battery load test gives a more accurate indication of the battery condition.

If the battery has just received a charge, allow it to rest for 1-2 hours before taking a voltage reading.

Set multimeter to Vdc and connect to battery terminals. Always respect polarity.

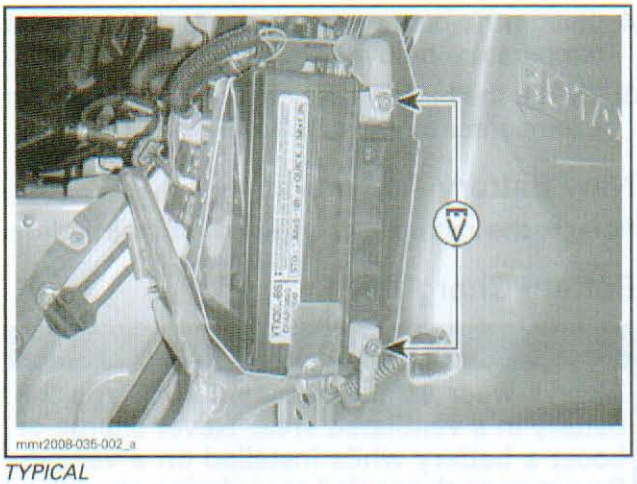

TYPICAL

Batteries with a voltage above 12.8 V do not need to be charged.

Batteries with a voltage of 12.8 V and below need to be charged. Refer to *BATTERY CHARGING* in this section.

Battery Testing (Load Applied)

This is the best test used to determine the battery condition.

Using a load testing device such as the NAPA ULTRA PRO BATTERY LOAD TESTER (P/N 95260), test the storage capacity of the battery. It has a 500 A carbon pile adjustable load.

The battery should be fully charged before testing.

If battery has just been recharged, allow battery to rest for at least one hour.

Follow battery load tester instructions.

If battery voltage has dropped below 10 Vdc (or voltage indicated on battery temperature compensation chart), battery storage capacity has decreased appreciably and should be replaced.

Battery Removal

⚠ WARNING

The BLACK (–) battery cable must always be disconnected first and reconnected last. Never charge or boost a battery while installed on vehicle.

1. Open right side panel of vehicle.
2. Disconnect BLACK (–) cable terminal from the negative battery post.
3. Slide the RED rubber protector off the (+) cable terminal and disconnect it from the battery post.

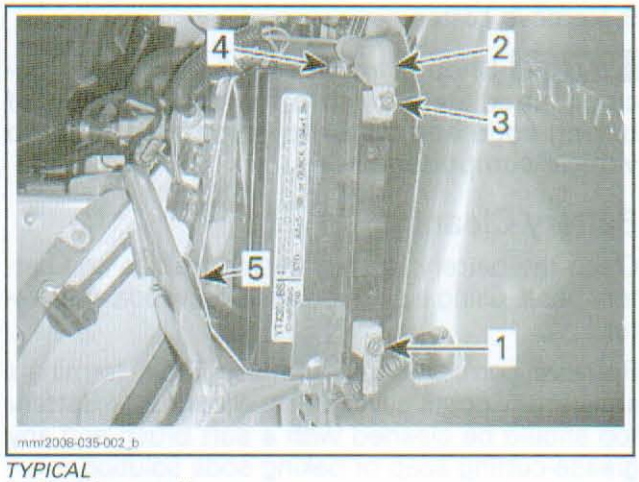

TYPICAL
1. *Negative post (-)*
2. *Red rubber protector*
3. *Positive terminal (+)*
4. *Battery retaining bolt and nut*
5. *Retaining plate hook*

4. Remove electrical harness from retaining clip.
5. Unclip both fuses from oil tank (500SS/600/800R).
6. Remove the battery retaining plate nut and bolt.

www.midwestmanuals.com

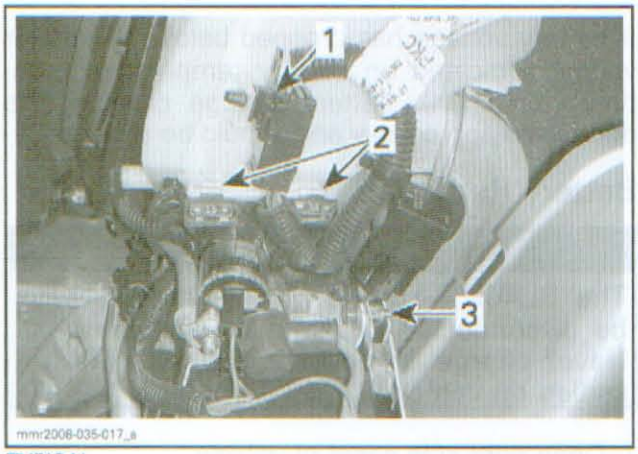

TYPICAL
1. *Harness retaining clip*
2. *Fuse holder retaining clips*
3. *Battery retaining plate bolt*

7. Lift the retaining strip and unhook it from the battery support to remove it.
8. Move retaining strip aside.
9. Remove battery.

NOTICE Should any electrolyte spillage occur, immediately wash off with a solution of baking soda and water to prevent damage to vehicle components.

Battery Cleaning

Clean the battery, battery casing, cables and battery posts using a solution of baking soda and water.

Remove corrosion from battery cable terminals and battery posts using a firm wire brush. Battery top should be cleaned with a soft brush and any grease-cutting soap or baking soda solution.

Battery Inspection

Visually inspect battery casing for cracks, leaks or other possible damage.

Discoloration, warping or raised top, indicates that the battery has overheated or been overcharged.

If the casing is damaged, replace battery and thoroughly clean battery tray and surrounding area with a water and baking soda solution.

⚠ WARNING

Should the battery casing be damaged, wear a suitable pair of non-absorbent gloves when removing the battery by hand.

Inspect the battery posts for security of mounting.

Battery Storage

NOTICE A discharged battery will freeze and may damage its casing. A damaged casing will allow electrolyte spillage that may damage surrounding parts.

1. Disconnect and remove battery from the vehicle.
2. Clean battery terminals and cable connections using a wire brush. Apply a light coat of SILICONE DIELECTRIC GREASE (P/N 293 550 004) or petroleum jelly on terminals.
3. Clean battery casing using a solution of baking soda and water. Rinse battery with clear water and dry thoroughly using a clean cloth.

NOTE: The battery must always be stored in fully a charged state.

4. Charge the battery every month if stored at a temperature **below** 15°C (59°F).
5. Charge the battery every two week if stored at a temperature **above** 15°C (59°F).

New Battery Activation

Refer to the instructions provided with the battery.

Battery Charging

⚠ WARNING

Always wear safety glasses and charge the battery in a ventilated area. Never charge or boost a battery while installed on a vehicle. Do not open the sealed caps during charging. Do not place battery near an open flame.

NOTICE If the battery becomes hot to the touch, stop charging and allow it to cool before continuing.

NOTE: Sealed VRLA batteries have an internal safety valve. If battery pressure increases due to overcharging, the valve opens to release excess pressure, preventing battery damage.

Carry out a battery *UNLOADED VOLTMETER TEST* as described in this section, then proceed as described here.

An automatic charger is the fastest and most convenient way for error-proof charging.

When using a constant current charger, charge battery according to the chart below.

www.midwestmanuals.com

Battery Voltage Below 12.8 V and Above 11.5 V

STANDARD CHARGING (RECOMMENDED)		
BATTERY TYPE	TIME	CHARGE
YTX20L-BS	4-9 hours	2 A

QUICK CHARGING		
BATTERY TYPE	TIME	CHARGE
YTX20L-BS	50 minutes	10 A

Battery Voltage Below 11.5 V

A battery with a voltage below 11.5 V requires a special procedure to recharge. In charging an over discharged battery, its internal resistance may be too high to charge at a normal charging rate.

Set charger to the 10 A charging rate and monitor charging current for approximately 30 minutes. If there is no change in charging current or battery becomes abnormally hot, the battery is most likely at the end of its service life and should be replaced.

Battery Installation

Reinstall battery and secure retaining strip to support properly.

Install fuse box, fuse holders, relays and harness as applicable to model.

Connect **RED (+) cable FIRST** to positive battery terminal.

Connect **BLACK (–) cable LAST**.

⚠ WARNING

Battery BLACK (–) cable must always be disconnected first and reconnected last.

Cover the RED (+) cable terminal with the protective rubber boot.

Apply SILICONE DIELECTRIC GREASE (P/N 293 550 004) on battery posts and connectors.

www.midwestmanuals.com

www.midwestmanuals.com

STARTING SYSTEM

SERVICE TOOLS

Description	Part Number	Page
FLUKE 115 MULTIMETER	529 035 868	376, 378, 383–384

SERVICE PRODUCTS

Description	Part Number	Page
THERMOLUBE SYNTHETIC GREASE	219 700 417	371, 374

www.midwestmanuals.com

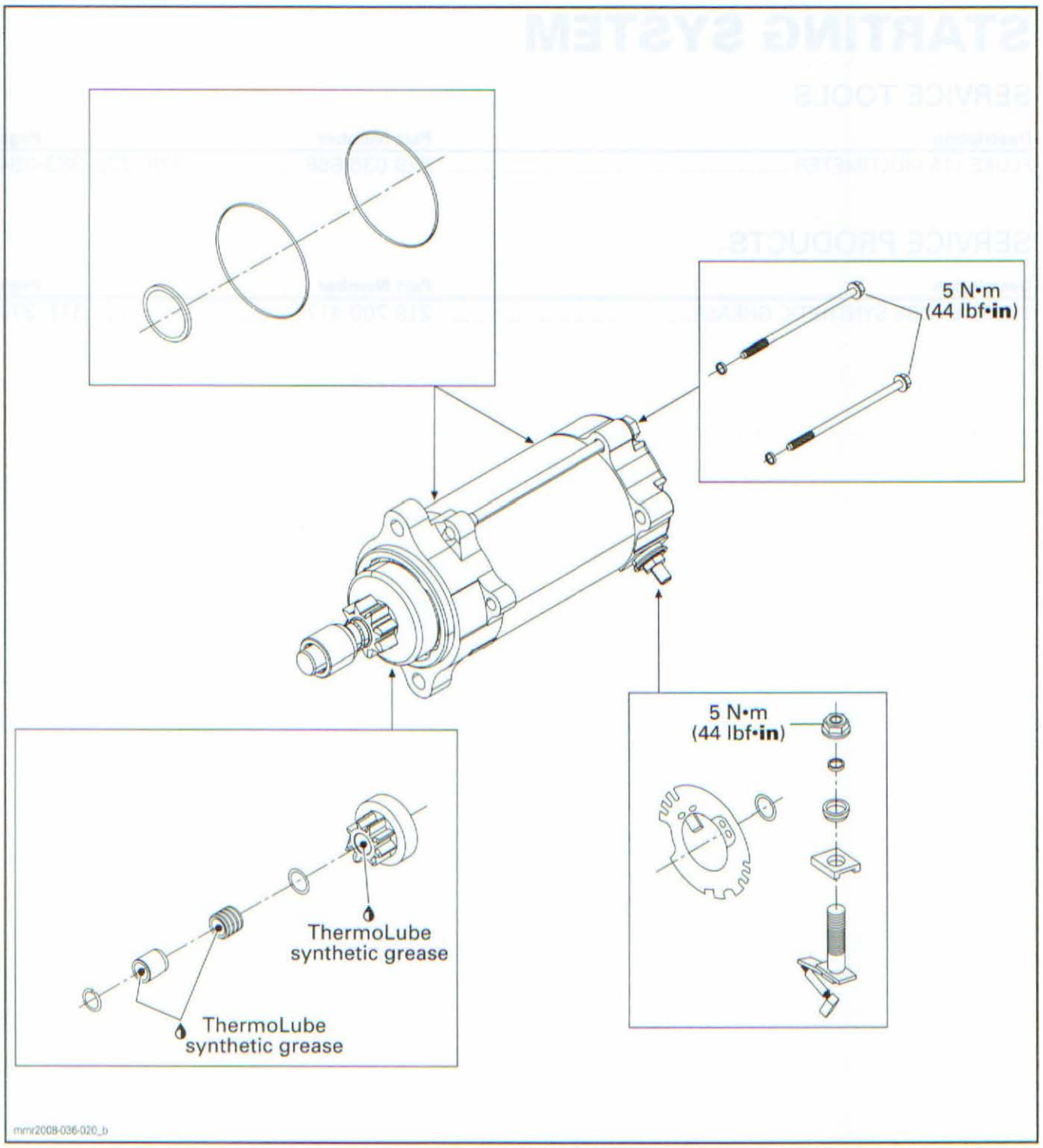

www.midwestmanuals.com

GENERAL

BASIC STARTING SYSTEM OPERATION

When the START/RER button is pressed, a 12 Vdc signal is sent to the ECM, which completes the starter solenoid circuit by providing a ground. The battery then supplies current to the starter through the starter solenoid to crank the engine.

Conditions for Engine Cranking

- Engine stop switch to RUN
- DESS cap installed
- Press START/RER button.

TROUBLESHOOTING

TROUBLESHOOTING TIPS

NOTE: On applicable models, it is good practice to check for fault codes using B.U.D.S. software as a first troubleshooting step. Refer to *MONITORING SYSTEM/FAULT CODES*.

In case of starter malfunction, first ensure the problem is not related to an engine mechanical component.

500SS/600/800R

1. Try to pull start the engine.
2. If engine can be started, test starting system as per *STARTING SYSTEM TESTING SEQUENCE*.
3. If engine does not start or cannot be rotated, the problem is not related to the starting system.

600 HO E-TEC

This model is not equipped with a rewind starter. Carry out the following procedure to ensure engine can be rotated.

1. Set engine stop switch to STOP.
2. Ensure DESS key is **not installed**.
3. Manually rotate the engine using the drive pulley.

⚠ WARNING

When manually rotating engine, the engine stop switch MUST BE set to STOP and DESS cap MUST NOT be installed or severe injury may occur.

If the engine can be rotated, test starting system as per *STARTING SYSTEM TESTING SEQUENCE*.

If the engine cannot be rotated, check engine.

STARTING SYSTEM TESTING SEQUENCE

Test starting system in the following order:

- 30 A fuse (FA)
- 5 A fuse (FB)
- Battery connections and voltage test, refer to *CHARGING SYSTEM*
- Starter. Refer to *STARTER QUICK TEST*
- Starter solenoid. Refer to *STARTER SOLENOID QUICK TEST*
- Start switch. Refer to *START/RER SWITCH USING B.U.D.S.*

If the engine cannot be rotated using the rewind starter, the problem is not related to the starting system. Inspect the engine.

PROCEDURES

START/RER FUSE

NOTE: When a burnt fuse is found, always identify the cause before replacing it.

Fuse Inspection

The ECM power circuit used for the starting system first passes through the 30 A battery charging fuse (FA).

Then it passes through a 5 A START/RER fuse (FB), to the starting system circuits.



TYPICAL - 500SS/600/800R
1. *START/RER fuse (FB)*
2. *Charging fuse (FA)*

www.midwestmanuals.com

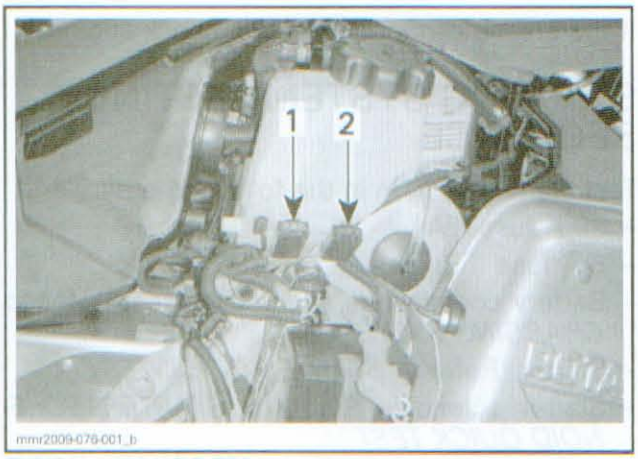

TYPICAL - 600 HO E-TEC
1. *START/RER fuse (FB)*
2. *Charging fuse (FA)*

If no voltage is present at the ECM, or the starter does not crank the engine, test each fuse condition and replace it if necessary.

If fuses are good, try a starter solenoid quick test, refer to *STARTER SOLENOID* in this section.

ELECTRIC STARTER

Starter Quick Test

1. Set engine cut-out switch to STOP or remove DESS cap to prevent engine from starting.

⚠ WARNING

Do not touch spark plug or cables when cranking engine. High voltage can cause a powerful electrical shock if you touch them.

2. Connect one end of a battery booster cable to the positive (+) battery post.
3. Momentarily touch the other end of the booster cable to the starter cable terminal on the starter solenoid.

⚠ WARNING

A spark will be generated when making the final contact of the booster cables to power the starter directly. If there is a fuel or acid smell (fuel system or battery leak), or visible evidence of a leak, do not carry out this procedure as the spark generated may ignite the fuel or acid vapors. This would produce a fire or explosion possibly resulting in severe injury, or fatality.

NOTE: This procedure will bypass the starter solenoid and supply current from the battery directly to the starter through its power input cable.

If the starter does not turn, check for the following:
- Starter power cable/connections
- Starter.

If the starter rotated, carry out a *STARTER SOLENOID QUICK TEST.*

Starter Removal

1. Remove both side panels and hood, refer to *BODY* section.
2. Disconnect BLACK (-) cable from battery.
3. Disconnect RED (+) cable from battery.

⚠ WARNING

Always disconnect BLACK (-) cable first and reconnect last.

4. Remove tool kit holder and drive belt guard.
5. Remove drive belt and drive pulley, refer to *ENGINE DRIVE SYSTEM* section.
6. Remove muffler and tuned pipe, refer to *EXHAUST SYSTEM* section.
7. Disconnect RED power cable from starter.

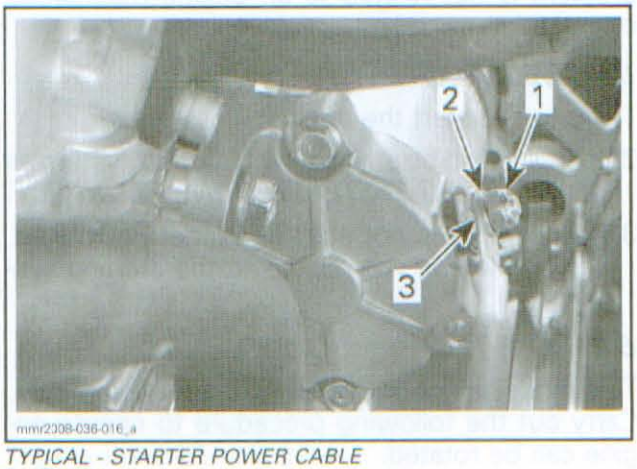

TYPICAL - STARTER POWER CABLE
1. *Elastic nut*
2. *Washer*
3. *Power cable*

8. Remove the LH front and rear engine mounting hex screws (PTO side). Discard the screws.

www.midwestmanuals.com

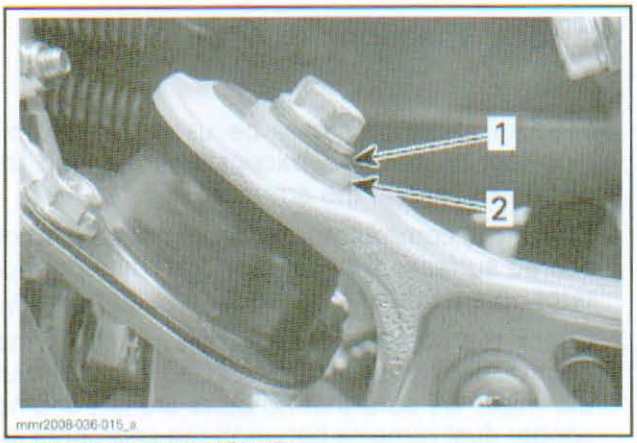

LH FRONT ENGINE MOUNT
1. *Conical washer*
2. *Flat washer*

NOTE: Pay attention to the washer positions for installation. The front mount screw has a flat washer under the head of the screw followed by a conical spring washer.

9. Remove and discard the three bolts retaining the engine torque stopper support.

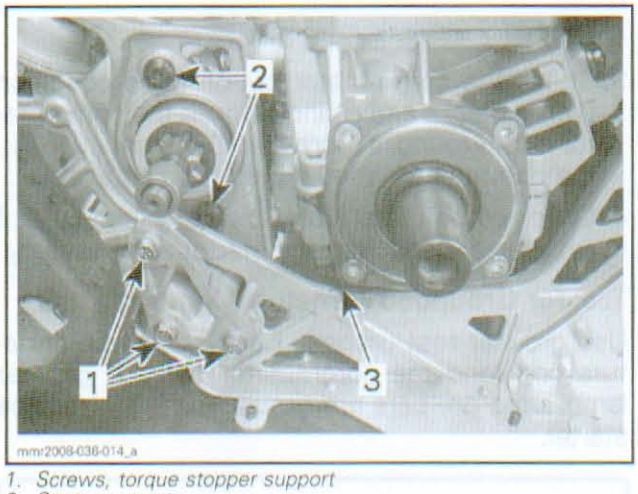

1. *Screws, torque stopper support*
2. *Starter screws*
3. *Pry bar position*

10. Insert a pry bar over the LH frame member and gently raise the engine just enough to access the lower mounting torx screw on the starter.
11. Remove and discard the lower mounting screw from the starter.
12. Remove the pry bar.
13. Remove and discard the upper mounting screw from the starter.
14. Remove and discard the RH starter mounting screw from the front of the engine.

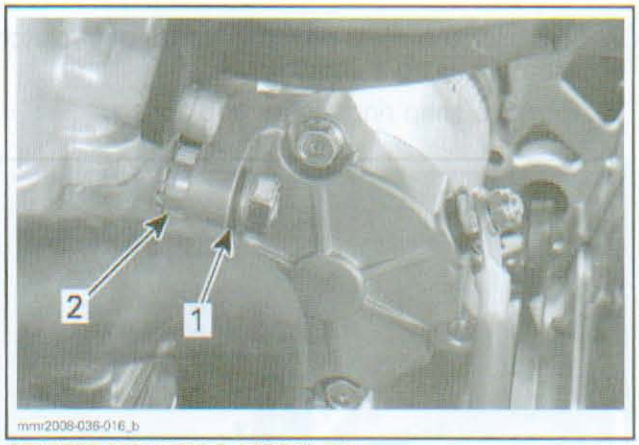

STARTER MOUNTING SCREW, RH
1. *Washer under screw head*
2. *Washer spacer between starter and engine*

NOTE: When removing the mounting screw on the RH side of the starter, pay attention to the spacer between engine and starter, and the washer under the screw head.

Starter Disassembly

1. Refer to the exploded view in the beginning of this section.
2. Before disassembling, trace index marks on the starter housing and covers for parts alignment at reassembly.

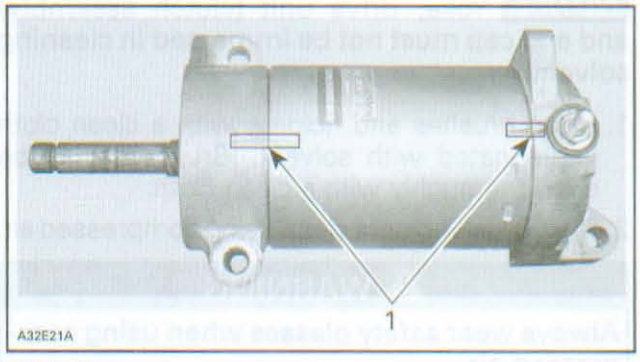

TYPICAL
1. *Alignment index marks for reassembly*

3. Remove starter through bolts.
4. Separate end cap from starter housing.
5. Withdraw armature from starter housing.
6. If necessary, remove brush holder from end cap.
7. Check for radial play between the armature shaft and end cap bearing. Replace the end cap bearing or replace starter if radial play is detected.
8. If parts are in good condition, coat them with THERMOLUBE SYNTHETIC GREASE (P/N 219 700 417) before reinstalling them.

www.midwestmanuals.com

9. Push back the collar near the starter gear/clutch assembly using a screwdriver.
10. Remove snap ring, collar, and spring.

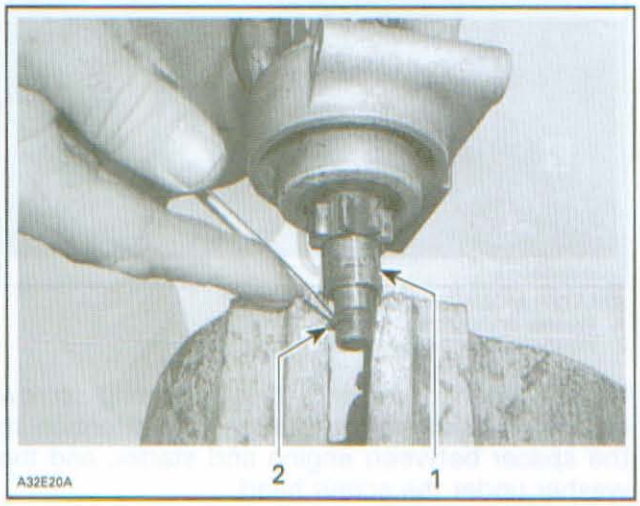

1. Collar
2. Snap ring

11. Turn starter clutch clockwise to remove it from the armature assembly.
12. Pull yoke from armature.

Starter Cleaning

NOTICE **Yoke, drive unit (clutch assembly) and end cap must not be immersed in cleaning solvent.**

1. Clean brushes and holders with a clean cloth impregnated with solvent. Brushes must be dried thoroughly with a clean cloth.
2. Blow brush holders clean using compressed air.

⚠ WARNING

Always wear safety glasses when using compressed air.

3. Remove dirt, oil or grease from commutator using a clean cloth soaked in suitable solvent. Dry well using a clean and dry cloth.
4. Clean engine ring gear teeth and drive unit (clutch).

NOTE: Bushings or bearings must not be cleaned with grease dissolving agents.

5. Immerse all metal components in cleaning solution. Dry using a clean and dry cloth.

Starter Inspection

Armature

NOTE: An ohmmeter may be used for the following test procedures, except when testing for shorted windings in the armature.

1. Check the commutator for roughness, burnt or scored surface. If necessary, turn the commutator on a lathe, enough to remove grime only.
2. Check the commutator for mica depth. If the depth is less than 0.20 mm (.008 in), undercut the mica. Be sure that no burrs are left and no copper dust remains between the segments after the undercutting operation is completed.

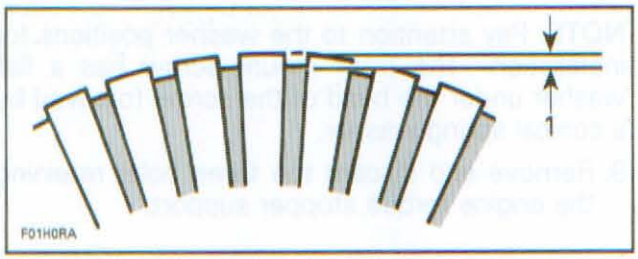

1. Commutator undercut 0.20 mm (.008 in)

3. Check the commutator out-of-round condition with V Blocks and an indicator. If the commutator out-of-round is more than 0.40 mm (.016 in), the commutator should be turned on a lathe.
4. Check commutator outer diameter for signs of excessive wear. Replace starter as necessary.

Test for Grounded Armature Winding

Use growler test probes. Check between armature core and the commutator bars. If growler lamp turns on, bars are grounded. If so, replace starter.

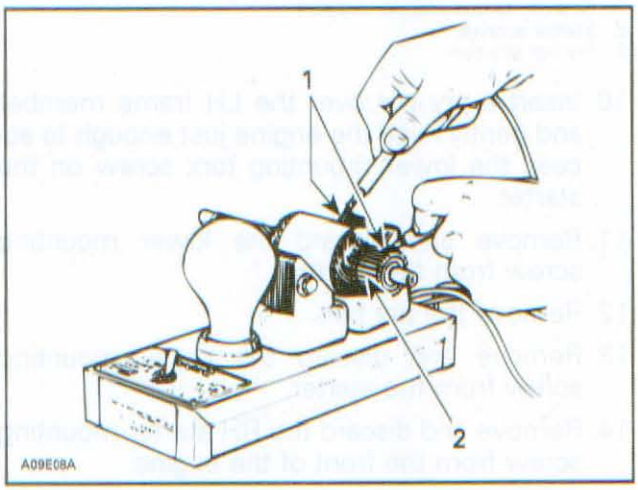

1. Test probes
2. Commutator bars

www.midwestmanuals.com

Test Armature for Shorted Winding

When the armature is rotated in the growler with a steel strip (hacksaw blade) held above it, the strip will vibrate over that area of the armature which has a short circuit. Replace starter if a shorted winding is found.

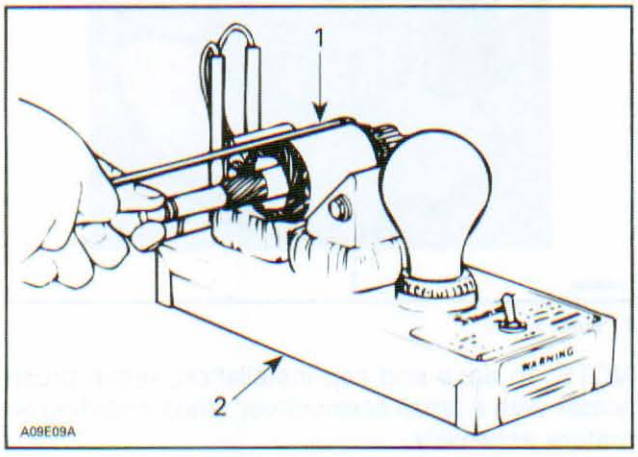

1. Steel strip (hack-saw blade)
2. Growler

Test the Armature for Open Circuit

1. Use growler test probes.
2. Place one test probe on a commutator bar and the other test probe on the neighboring bar.
3. Repeat this operation for all bars, moving one test probe at a time.

If the growler lamp does not turn on, the armature circuit between these 2 bars is opened. If an open circuit is found, the starter should be replaced.

NOTE: Open circuits most often occur at the commutator riser where windings are soldered. Burnt commutator bars are usually an indication of an open-circuit in an armature winding.

Brush Holder

1. Check the brush holder for insulation using growler test probes.
2. Place one test probe on the insulated brush holder and the other test probe on the brush holder plate.

If the growler lamp turns on, the brush holder has to be repaired or replaced.

Brush Length

Measure brush length as illustrated. If less than the specified value, replace them.

MODEL	LENGTH	
	NEW	WEAR LIMIT
All	10 mm (.40 in)	6 mm (.24 in)

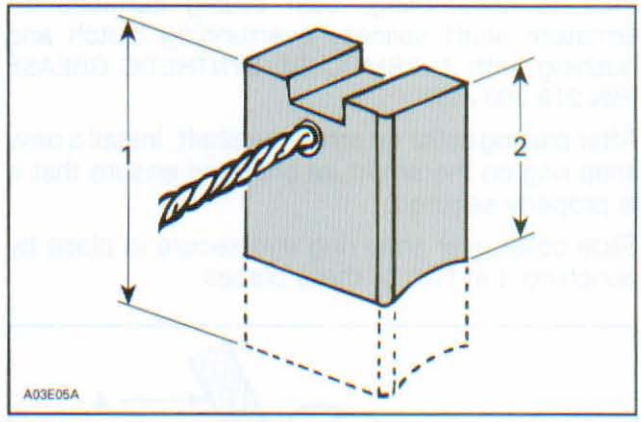

TYPICAL
1. New
2. Wear limit

End Cap

Check the mica insulation of the positive brush.

Check the roller bearing (or bushing) condition. Replace, if necessary.

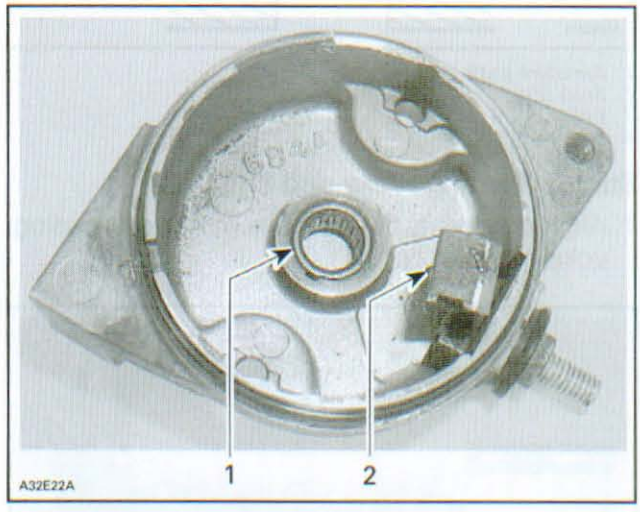

1. Roller bearing
2. Positive brush

Overrunning Clutch

The pinion of the overrunning clutch should turn smoothly in a clockwise direction, and should not slip in a counterclockwise direction. If defective, replace clutch assembly.

Check the pinion teeth for wear and damage. If defective, replace.

www.midwestmanuals.com

Starter Assembly

Reverse the order of disassembly to reassemble starter. However, pay attention to the following operations.

Prior to assembling, coat sliding surfaces on armature shaft splines, overrunning clutch and bushing with THERMOLUBE SYNTHETIC GREASE (P/N 219 700 417).

After placing collar on armature shaft, install a new snap ring on the armature shaftand ensure that it is properly secured.

Slide collar over snap ring and secure in place by punching it at two or three places.

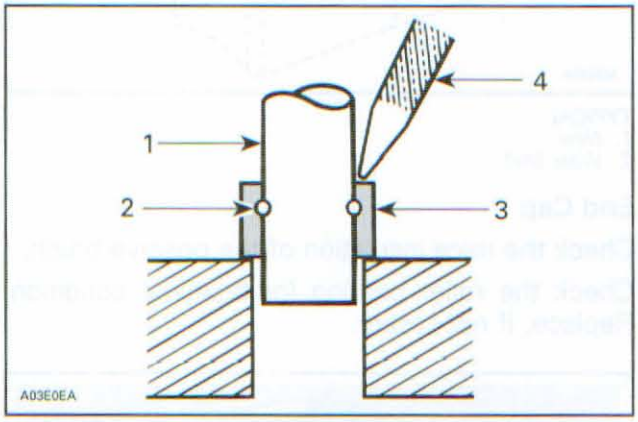

1. *Armature shaft*
2. *Snap ring*
3. *Collar*
4. *Punch*

Starter Housing, Yoke and End Cap

1. Align previously traced index marks on housing, yoke and end cap.

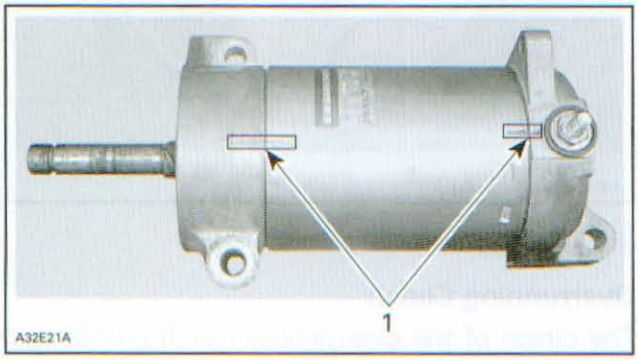

TYPICAL
1. *Aligned index marks*

2. Open brushes and slide over commutator.
3. Align end cap locating notch with yoke locating protrusion and properly sit brush holder into cap.

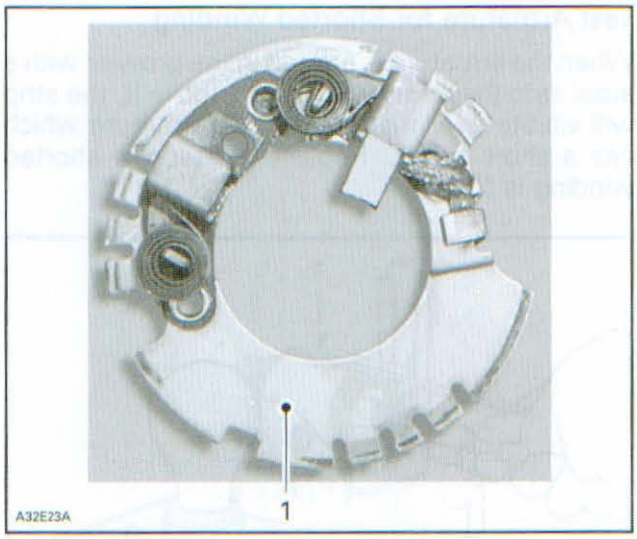

1. *Brush holder*

NOTE: To ease end cap installation, retain brush holder with a small screwdriver while installing armature assembly.

NOTICE **Place two end caps on a flat surface before tightening the through bolts. Ensure end cap fits perfectly on yoke.**

4. Torque starter through bolts as per exploded view.

Starter Installation

Install removed parts in the reverse order of removal, however, pay attention to the following.

- Ensure starter and engine mating surfaces are free of grime. Serious trouble may arise if starter is not properly aligned.
- Replace all scotch grip screws.
- For ease of installation, install the three new starter mounting screws loosely before torquing.
- Torque the two starter mounting Torx screws first, then the hex screw to 28 N•m (21 lbf•ft) .
- Install the torque stopper support and two new engine mounting bolts, refer to *ENGINE REMOVAL AND INSTALLATION* section.
- Connect the RED wire to the large terminal on the starter.
- Install the drive belt, refer to *DRIVE SYSTEM AND BRAKE* section.
- Install the muffler and tune pipe, refer to *EXHAUST SYSTEM* section.
- Reconnect the positive (+) RED battery cable, then the negative (-) BLACK cable.

www.midwestmanuals.com

⚠ WARNING

Always disconnect ground cable first and reconnect last.

NOTICE Be sure to install the spacer between engine and starter, and the washer under the screw head when installing the mounting screw on the RH side of the starter.

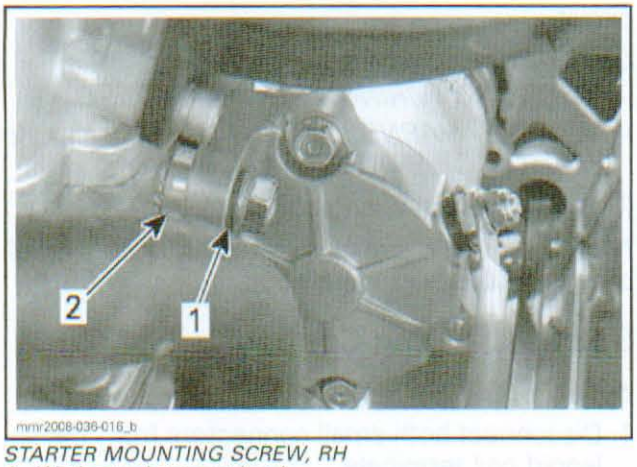

mmr2008-036-016_b

STARTER MOUNTING SCREW, RH
1. *Washer under screw head*
2. *Washer spacer between starter and engine*

STARTER SOLENOID

Solenoid Quick Test

1. Test battery voltage, it should be approximately 12.8 Vdc for a fully charged battery.
2. Disconnect the small positive connector from the solenoid coil.

MODEL	POSITIVE TERMINAL
500SS/600/800R	BEIGE
600 HO E-TEC	RED/GREEN

3. Install a jumper wire (with insulated clips) between the positive solenoid terminal and the positive battery terminal.
4. Disconnect the small negative connector (ORANGE/BLACK wire) from the starter solenoid.
5. Install a jumper wire on the negative solenoid terminal and momentarily touch the other end to battery ground.

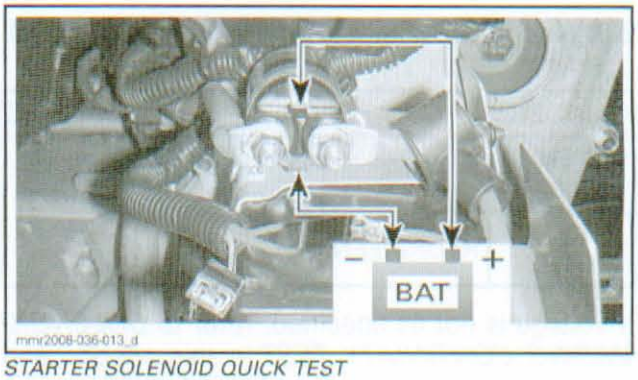

mmr2008-036-013_d

STARTER SOLENOID QUICK TEST

NOTICE The two small solenoid coil terminals are close to each other. When installing the two jumper wires, ensure the ends of the jumper wires are insulated and cannot come into contact with each other or a short circuit will occur.

If the starter engages, refer to *INPUT VOLTAGE TEST (STARTER SOLENOID).*

If the starter did not engage, refer to *STARTER SOLENOID STATIC TEST,* or try a known good solenoid.

Input Voltage Test (Starter Solenoid)

1. Install DESS cap on DESS post.
2. Set engine stop switch to RUN.
3. Set multimeter to Vdc.
4. Press and hold the START/RER button as you back-probe the solenoid coil 12 Vdc input connector.

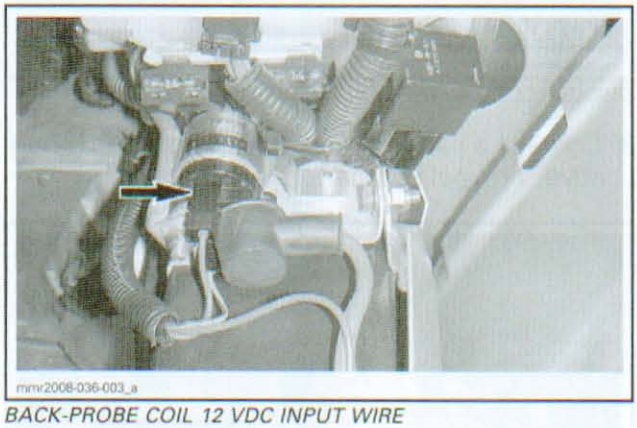

mmr2008-036-003_a

BACK-PROBE COIL 12 VDC INPUT WIRE

www.midwestmanuals.com

5. Measure the solenoid input voltage as per following table.

MODEL	PROBE		VOLTAGE
500SS/600/800R	BEIGE	Battery ground	Battery voltage
600 HO E-TEC	RED/GREEN		

If voltage is not as specified, refer to *SOLENOID WIRING CONTINUITY TEST* in this section and test for solenoid power wire continuity.

If the input voltage to the solenoid control winding is as specified, refer to *SOLENOID GROUND SIGNAL TEST.*

Solenoid Ground Signal Test

1. Reconnect the coil 12 Vdc input wire to the positive solenoid terminal.
2. Disconnect the small ORANGE/BLACK wire from the solenoid negative terminal (ground signal).

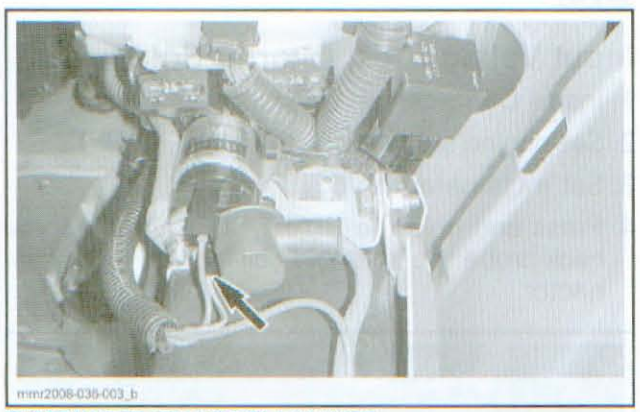

DISCONNECT ORANGE/BLACK WIRE

3. Connect a jumper wire between solenoid negative terminal and battery ground.

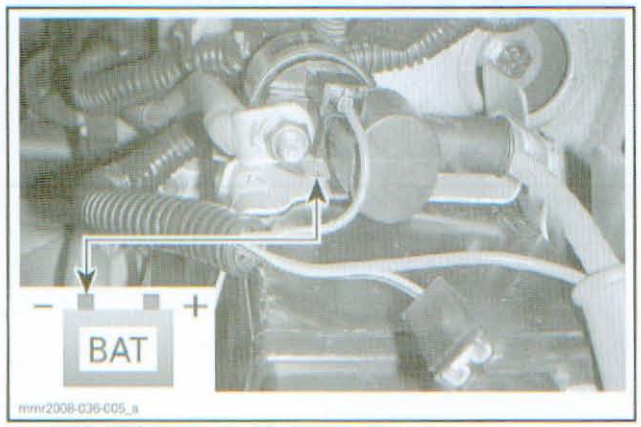

JUMPER NEGATIVE TO SOLENOID TERMINAL

4. Press START/RER button.

If solenoid does not function and starter solenoid input voltage test was good, carry out the following:

- *SOLENOID STATIC TEST*
- *SOLENOID DYNAMIC TEST.*

If solenoid functions normally, ECM may not be providing a ground signal, or the ground signal wire from ECM to starter solenoid may be open circuit.

Carry out the following:

- *SOLENOID WIRING CONTINUITY TEST*
- *VEHICLE HARNESS CONTINUITY* (refer to START/STOP SWITCH in this section).

Repair or replace wiring/connectors.

NOTE: If ground signal wire tested good, and all other previous test were good, try a new ECM.

Solenoid Wiring Continuity Test

500SS/600/800R

1. Disconnect both small connectors from the solenoid coil terminals.
2. Disconnect the CF connector attached to the oil tank above battery.

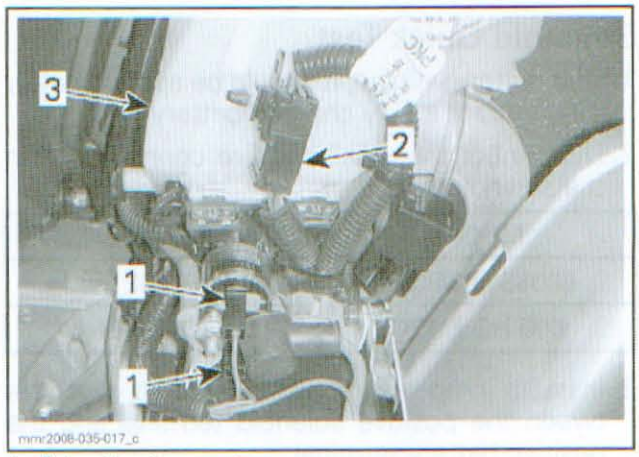

1. Solenoid coil connectors
2. CF connector
3. Oil tank

3. Set the FLUKE 115 MULTIMETER (P/N 529 035 868) to Ω selection.
4. Measure for continuity of each wire between the CF connector and the solenoid coil connectors.

NOTE: Resistance should be close to 0 Ω. Ground signal wire is ORANGE/BLACK.

Repair or replace wiring.

5. Reconnect wires to solenoid.

www.midwestmanuals.com

6. Reconnect CF connector.

Solenoid Static Test

1. Disconnect the small terminals from the starter solenoid.

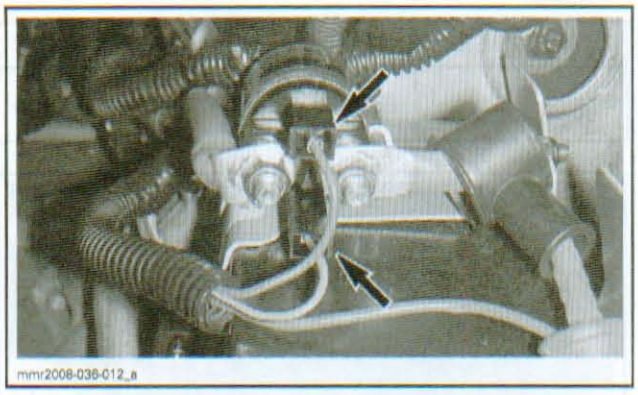

2. With a multimeter set to Ω, test coil winding resistance as follows.

SOLENOID CONNECTOR		MEASUREMENT
TERMINAL		RESISTANCE @ 20°C (68°F)
A	B	Approximately 7.5 Ω

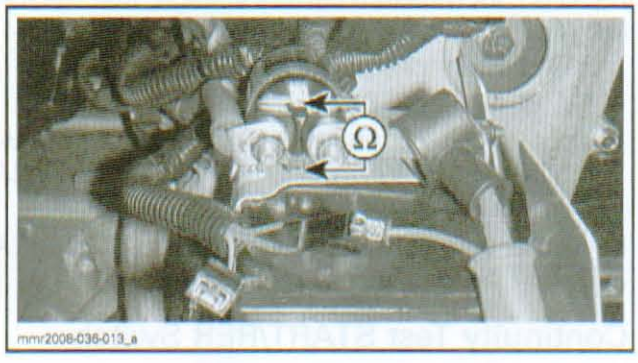

3. Disconnect battery ground cable.
4. Check for a stuck solenoid plunger by measuring the resistance through the solenoid main contacts as follows.

SOLENOID CONNECTOR		MEASUREMENT
Battery post	Starter post	Open circuit

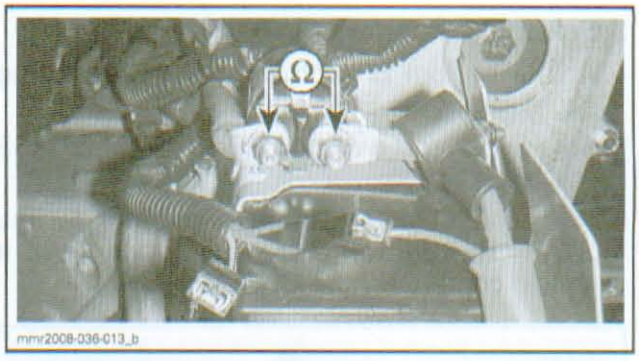

If a reading other than an open circuit is measured, replace solenoid.

Solenoid Dynamic Test

1. Reconnect battery ground cable and solenoid connectors.
2. Disconnect the ignition coil(s) primary winding connector(s) to prevent engine from starting.
3. Press START/RER button and hold. While engine is cranking, measure the voltage drop across the solenoid main contacts as follows.

SOLENOID CONNECTOR		VOLTAGE
Post coming from battery	Post going to starter	0.2 Vdc max.



4. Reconnect coil connector(s).

If voltage is out of specification, replace solenoid.

If solenoid tests good, refer to *ELECTRIC STARTER*.

START/RER SWITCH (500SS/600/800R)

START/RER Switch Test Using B.U.D.S.

1. Connect the vehicle to the latest B.U.D.S. software available from BOSSWeb. Refer to *COMMUNICATION TOOLS/B.U.D.S. SOFTWARE* for proper connection instructions.
2. In B.U.D.S., select the **Read Data** button.

www.midwestmanuals.com

3. Select the **Monitoring** tab.
4. At the bottom LH corner of the **Monitoring** page, select the **ECM** tab.
5. Set engine stop switch to RUN and install DESS cap on DESS post.
6. Press the START/RER button and look for the **START/RER Button** LED in the bottom field. It should come ON (turn GREEN).



TYPICAL
1. Should turn on (GREEN)

If the START/RER button LED comes on in B.U.D.S., the starting system is functional on the input side (START/RER button, ECM and input circuit wiring). Test the output side of the starting system:

- ECM ground signal to starter solenoid
- *STARTER SOLENOID QUICK TEST*
- *SOLENOID WIRING CONTINUITY*
- Starter power cables.

If the LED does not come on, refer to *INPUT VOLTAGE TEST START/RER SWITCH.*

Input Voltage Test START/RER Switch

1. Remove multifunction gauge. Refer to *LIGHTS, GAUGE AND ACCESSORIES* section.
2. Disconnect the HG connector from the steering harness.

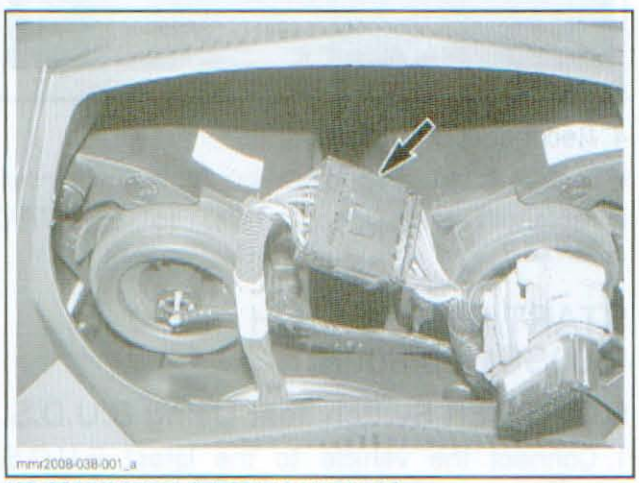

HG CONNECTOR, STEERING HARNESS

3. Set the FLUKE 115 MULTIMETER (P/N 529 035 868) to Vdc.
4. Measure voltage at battery terminals. It should be approximately 12.8 Vdc for a fully charged battery.
5. Measure the input voltage on the **vehicle harness side** of the HG connector as per following table.

TEST PROBES		VOLTAGE
Pin 5 (RED/GRAY)	Battery ground	Battery voltage

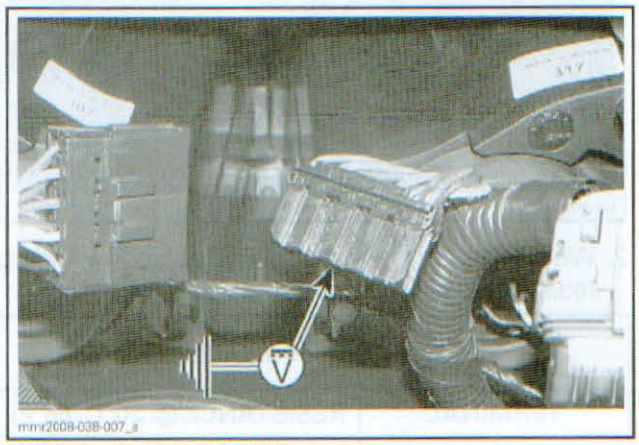

TYPICAL - HG CONNECTOR

If you do not measure battery voltage, test the following:

- 30 A battery charging fuse (FA)
- 5 A ECM fuse (FB)
- Input circuit continuity (HG connector to battery), refer to *VEHICLE HARNESS CONTINUITY TEST (START/RER SWITCH).*

If you measure battery voltage, refer to *CONTINUITY TEST START/RER SWITCH.*

Continuity Test START/RER Switch

1. Set multimeter to Ω.
2. Measure continuity of switch and steering harness wiring as per following table (steering harness side).

www.midwestmanuals.com

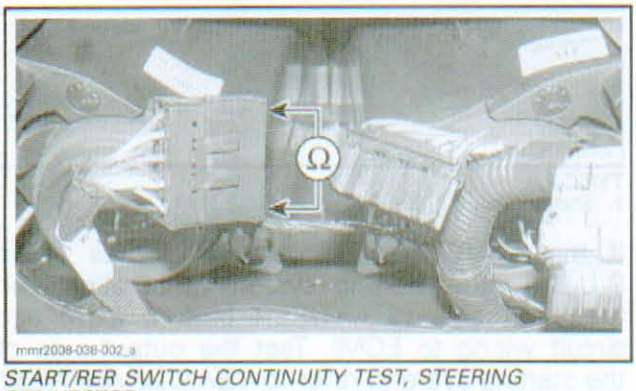

START/RER SWITCH CONTINUITY TEST, STEERING CONNECTOR

CONTINUITY TEST START/RER SWITCH			
SWITCH POSITION	(HG)CONNECTOR		RESISTANCE
Released	Pin 5 (RED/GRAY)	Pin 8 (BEIGE)	High value or infinite (OL)
Pressed and held			Continuity (Close to 0 Ω)

If START/RER switch continuity was good, test start control wiring to ECM, refer to *VEHICLE HARNESS CONTINUITY TEST (START/RER SWITCH)*.

If continuity test fails at HG connector, remove multifunction switch from handlebar and test continuity of steering harness from HG connector to LB connector in multifunction switch housing. Refer to *WIRING DIAGRAM* for circuit details.

Vehicle Harness Continuity Test (START/RER Switch)

1. Remove RH side panel, refer to *BODY* section.
2. Disconnect battery or remove the 5 A (FB) fuse (START/RER fuse).



START/RER FUSE (FB)

3. Disconnect the (CF) connector located above the battery.

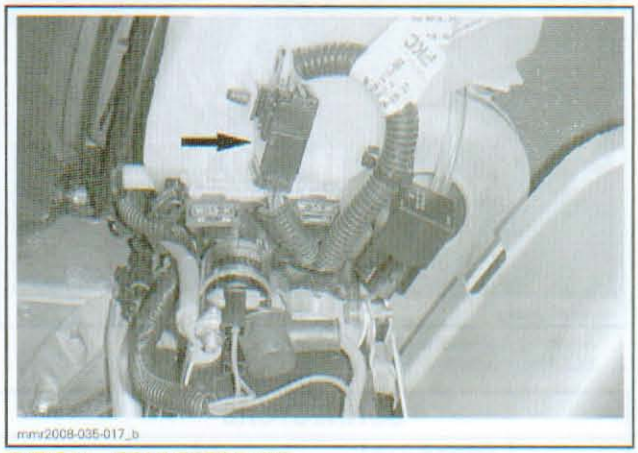

TYPICAL - CONNECTOR (CF)

4. Remove acoustic panel. and disconnect ECM connector, refer to *IGNITION SYSTEM* section.

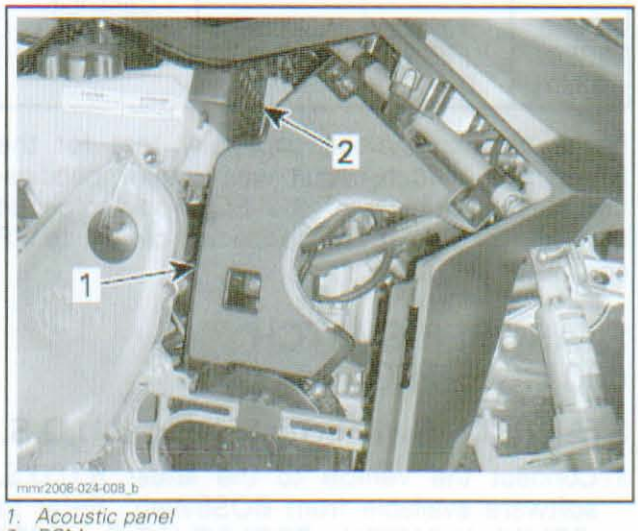

1. *Acoustic panel*
2. *ECM*

5. Measure for continuity between the steering harness connector (HG), the ECM connector, and the CF connector. Refer to following table.

www.midwestmanuals.com

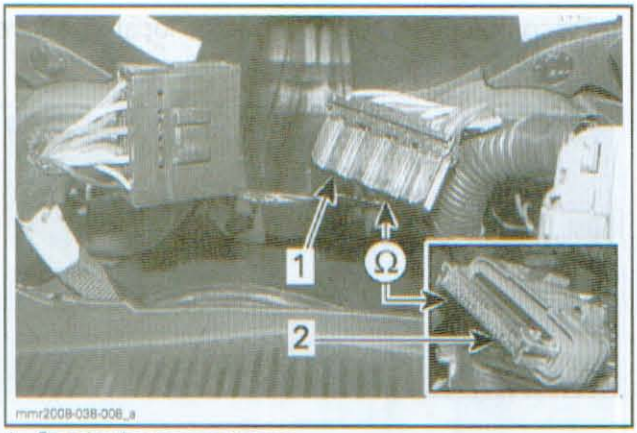

1. Steering harness connector
2. ECM connector

CONNECTORS			
CF	STEERING (HG)	ECM	RESISTANCE
Pin 2 (BEIGE)	Pin 8 (BEIGE)	Pin 8 (BEIGE)	Continuity (Close to 0 Ω)
Pin 3 (RED/ GRAY)	Pin 5 (RED/ GRAY)	Pin 34 (RED/ GRAY)	

If the vehicle harness continuity test for the START/RER switch circuit was within specification, test continuity of the ECM power circuit from the battery (ECM connector pin 34 to CF connector pin 3).

START/RER SWITCH 600 HO E-TEC

START/RER Switch Test Using B.U.D.S.

1. Connect the vehicle to the latest B.U.D.S. software available from BOSSWeb. Refer to *COMMUNICATION TOOLS/B.U.D.S. SOFTWARE* for proper connection instructions.
2. In B.U.D.S., select the **Read Data** button.
3. Select the **Monitoring** tab.
4. At the bottom LH corner of the **Monitoring** page, select the **ECM** tab.
5. Set engine stop switch to RUN and install DESS cap on DESS post.
6. Press the START/RER button and look for the **START/RER Button** LED in the bottom field. It should come ON (turn GREEN).

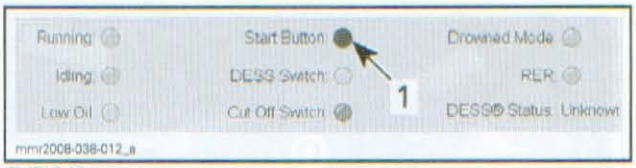

TYPICAL
1. Should turn on (GREEN)

If the START/RER button LED comes on in B.U.D.S., the starting system is functional on the input side (START/RER button, ECM and circuit wiring to ECM). Test the output side of the starting system, refer to *VEHICLE HARNESS CONTINUITY TEST (START/RER SWITCH).*

If the LED does not come on, refer to *INPUT VOLTAGE TEST START/RER SWITCH (SB CONNECTOR).*

Input Voltage Test START/RER Switch (SB Connector)

1. Set multimeter to Vdc.
2. Open RH side panel and measure voltage at battery terminals. It should be approximately 12.8 Vdc for a fully charged battery.
3. Remove steering cover from top of handlebars.
4. Disconnect the three pin connector (SB).

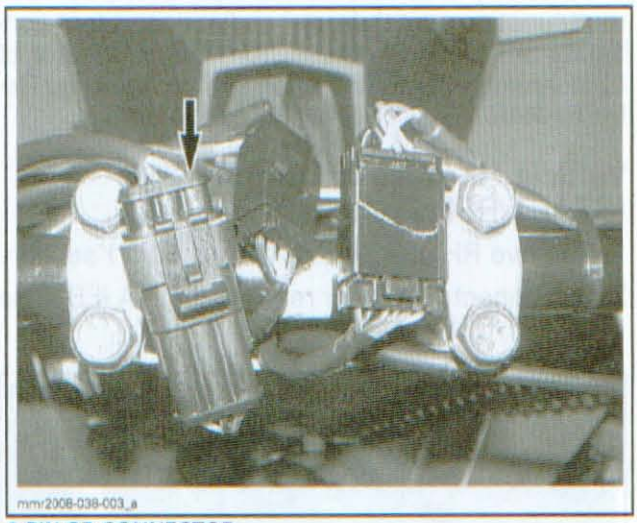

3-PIN SB CONNECTOR

5. Measure START/RER switch input voltage at the vehicle harness connector as per following table.

INPUT VOLTAGE TEST START/RER SWITCH (SB CONNECTOR)		
PROBE		VOLTAGE
Pin 3 (RED/BROWN)	Battery ground	Battery voltage

www.midwestmanuals.com

If battery voltage is measured, refer to *CONTINUITY TEST START/RER SWITCH (SB CONNECTOR).*

If battery voltage is not measured, test the following in the recommended order:
- 30 A battery charging fuse (FA)
- 5 A fuse (F9)
- *INPUT VOLTAGE TEST START/RER SWITCH (HG CONNECTOR).*

Input Voltage Test START/RER Switch (HG Connector)

1. Remove multifunction gauge, refer to *LIGHTS, GAUGE AND ACCESSORIES* section.
2. Disconnect HG connector.

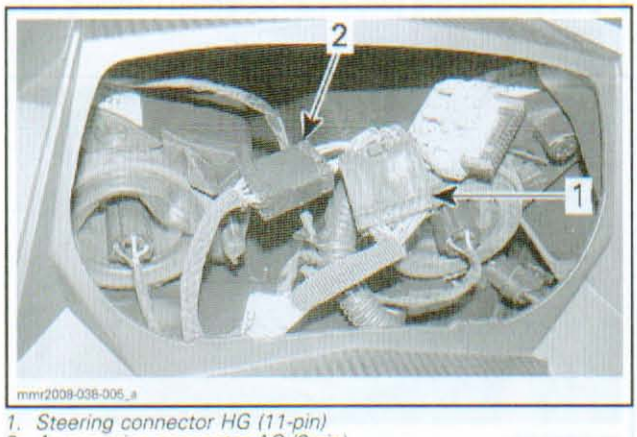

1. Steering connector HG (11-pin)
2. Accessories connector AC (8-pin)

3. Measure switch input voltage at the vehicle harness connector as per following table.

INPUT VOLTAGE TEST START/RER SWITCH (HG CONNECTOR)		
PROBE		VOLTAGE
Pin 6 (RED/GRAY)	Battery ground	Battery voltage

If battery voltage is measured, repair or replace the RED/BROWN wire between the HG connector (pin 6) and SB connector (pin 3).

If battery voltage is not measured, test the following in the recommended order:
- 30 A battery charging fuse (FA)
- 5 A fuse (F9)
- START/RER Switch Power Circuit Continuity in *VEHICLE HARNESS CONTINUITY TEST (START/RER SWITCH).*

Continuity Test START/RER Switch (SB Connector)

1. Disconnect the start button harness 3-pin connector (SB) on top of the handlebars.

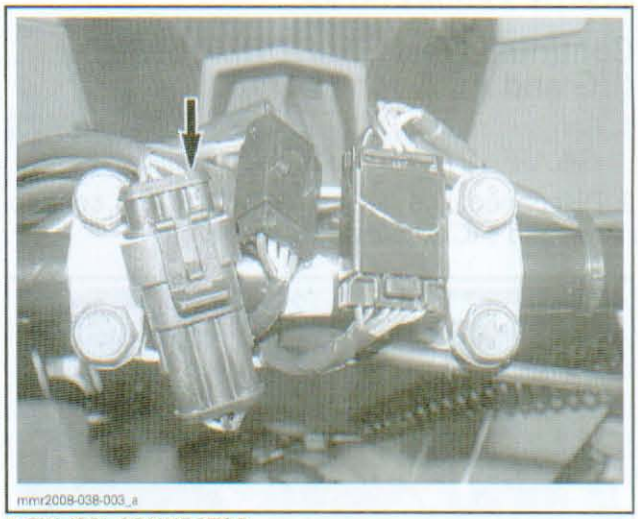

3-PIN (SB) CONNECTOR

2. Set multimeter to Ω selection.
3. Measure start switch continuity as per following table.

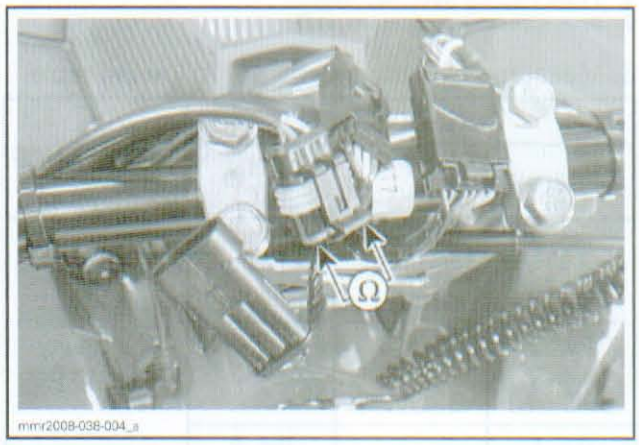

CONTINUITY TEST START/RER SWITCH (SB CONNECTOR)			
SWITCH POSITION	3-PIN (SB) CONNECTOR		RESISTANCE
Released	Pin 1 (BLACK)	Pin 2 (RED)	Continuity (Close to 0 Ω)
	Pin 1 (BLACK)	Pin 3 (WHITE)	High value or infinite (OL)
Pressed and held	Pin 1 (BLACK)	Pin 2 (RED)	High value or infinite (OL)
	Pin 1 (BLACK)	Pin 3 (WHITE)	Continuity (Close to 0 Ω)

www.midwestmanuals.com

If continuity test failed, replace START/RER switch.

If continuity test of start switch was good, refer to *CONTINUITY TEST START/RER SWITCH (HG AND AC CONNECTORS).*

Continuity Test START/RER Switch (HG and AC Connectors)

1. Remove multifunction gauge, refer to *LIGHTS, GAUGE, AND ACCESSORIES* section.
2. Disconnect the (HG) steering harness connector, and (AC) accessories connector.

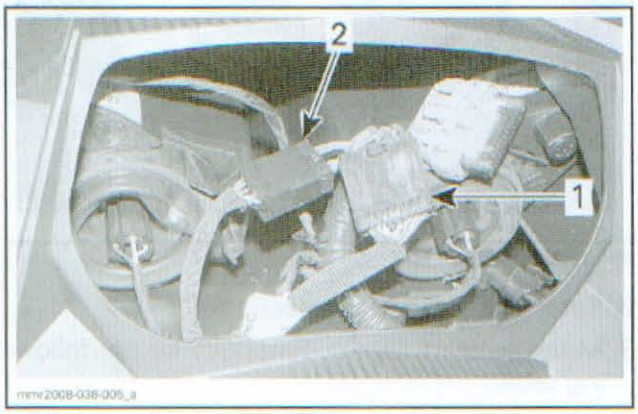

1. 11-pin steering connector (HG)
2. 8-pin accessories connector (AC)

3. Measure for continuity as per following table.

CONNECTORS			RESISTANCE
3-PIN (SB)	11-PIN (HG	8-PIN (AC)	
Pin 2 (BLACK/ BLUE)	Pin 1 (BLACK/ BLUE)	N.A.	Continuity (Close to 0 Ω)
Pin 3 (RED/ BROWN)	Pin 6 (RED/ BROWN)	N.A.	
Pin 1 (BEIGE)	N.A.	Pin 3 (BEIGE)	

If continuity readings were not as specified, repair or replace steering harness.

If continuity test of steering harness was good, refer to *VEHICLE HARNESS CONTINUITY TEST (START/RER SWITCH)* in this section.

Vehicle Harness Continuity Test (START/RER Switch)

1. Remove 30 A charging fuse (FA) and 5 A START/RER fuse (FB) located above battery.

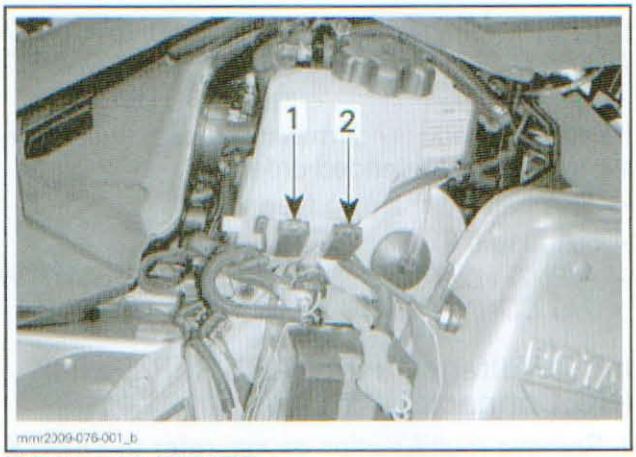

TYPICAL - 600 HO E-TEC
1. START/RER fuse (FB)
2. Charging fuse (FA)

2. Disconnect the two small solenoid winding connectors.

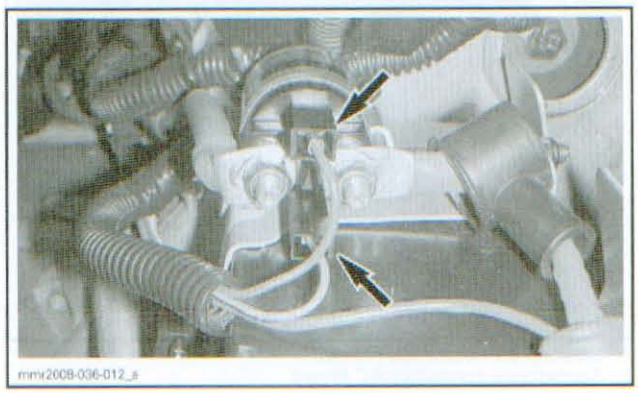

3. Remove LH side panel, refer to *BODY* section.
4. Remove tool kit holder and drive belt guard.
5. Disconnect ECM connectors J1A and J1B. (Top two connectors).

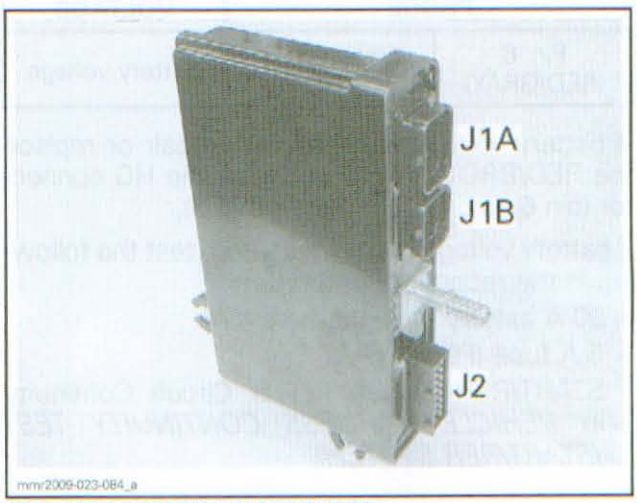

ECM CONNECTORS IDENTIFICATION

www.midwestmanuals.com

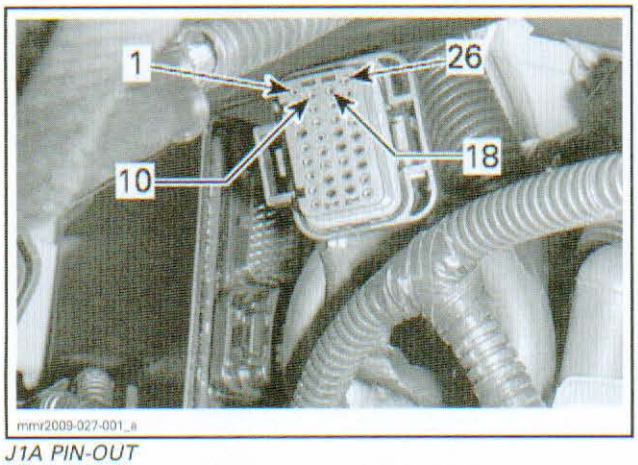

J1A PIN-OUT

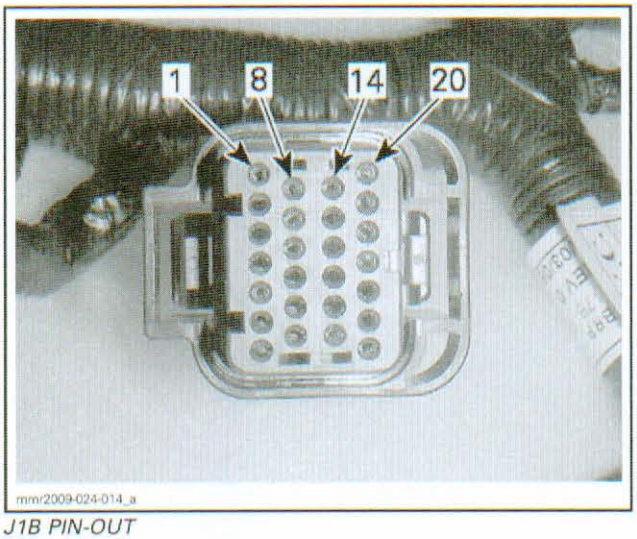

J1B PIN-OUT

6. Set FLUKE 115 MULTIMETER (P/N 529 035 868) to Ω selection and carry out the following continuity tests.

START/RER Switch Power Circuit Continuity

CONNECTORS			RESISTANCE
1	FB socket B (RED/GRAY)	HG Pin 6 (RED/GRAY)	Continuity (Close to 0 Ω)
2	FB socket A (RED/WHITE)	FA socket A (RED/WHITE)	

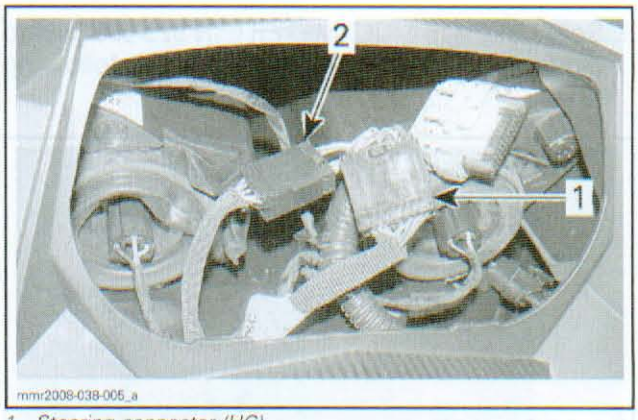

1. Steering connector (HG)
2. 8-pin connector (AC)

If resistance is not within specification, repair or replace wiring and connectors.

Starter Solenoid Power Wire Continuity

CONNECTORS			RESISTANCE
1	AC Pin 3 (RED/GREEN)	Solenoid wire (RED/GREEN)	Continuity (Close to 0 Ω)

If resistance is not within specification, repair or replace wiring and connectors.

Starter Solenoid Ground Wire Continuity

CONNECTORS			RESISTANCE
1	Solenoid wire (ORANGE/BLACK)	J1B pin 9	Continuity (Close to 0 Ω)

If resistance is not within specification, repair or replace wiring and connectors.

ECM START/RER Signal Circuit Continuity

NOTE: Connect the RED multimeter lead to the AC connector pin when carrying out this test.

CONNECTORS			RESISTANCE
1	AC Pin 3 (RED/GREEN) (RED meter probe)	J1A pin 28	Continuity (Close to 0 Ω)
2		J1B pin 10 (BLACK meter probe)	Erratic See D1 diode test

NOTE: Diode D1 is connected to the J1B pin 10 circuit. If multimeter leads are connected in reverse polarity, multimeter will read an open circuit (OL) to J1B pin 10.

If resistance is not within specification, repair or replace wiring and connectors.

D1 Diode Test

1. Remove the diagnostic connector (COM) from its storage cap.

www.midwestmanuals.com

2. Set FLUKE 115 MULTIMETER (P/N 529 035 868) to diode test function and carry out the following test.

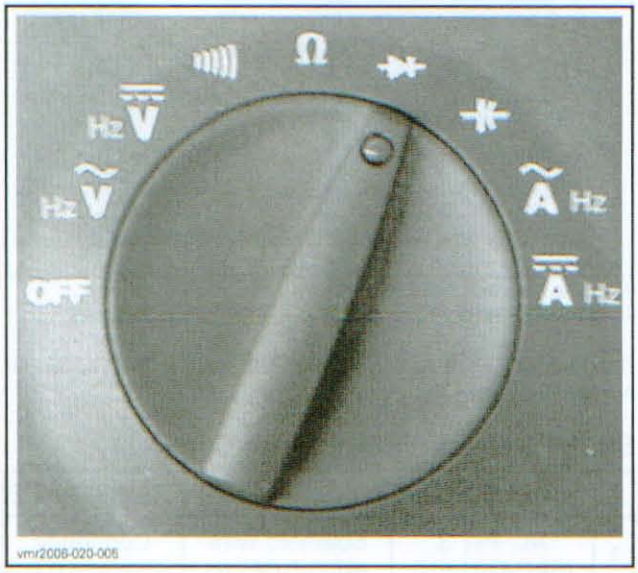

3. Connect multimeter test probes as per following table. Pay attention to diode polarity.

	CONNECTORS		READING
-	COM pin 4	J1A pin 28	N.A.
1	RED (+) probe	BLACK (-) probe	OL (open circuit)
2	BLACK (-) probe	RED (+) probe	Approximately 0.5 V

If readings ares not within specification, replace diode.

www.midwestmanuals.com

DIGITALLY ENCODED SECURITY SYSTEM (D.E.S.S.)

SERVICE TOOLS

Description	Part Number	Page
FLUKE 115 MULTIMETER	529 035 868	386

GENERAL

SYSTEM DESCRIPTION

The following components are specially designed for this system: ECM, D.E.S.S. key and post.

This system allows the engine to reach pulley engagement speed only if a D.E.S.S. key is installed on D.E.S.S. post and the key is recognized as valid by the ECM.

The D.E.S.S. key contains a magnet and a ROM chip.

- The magnet closes the reed switch inside the D.E.S.S. post. It is the equivalent of a rotary mechanical ignition switch.
- The ROM chip owns a unique digital code. It is the equivalent of the tooth-pattern cut on a conventional ignition key.

The D.E.S.S. system is quite flexible. Up to 8 D.E.S.S. keys may be programmed in the memory of the ECM using the B.U.D.S. software. The keys can also be erased individually.

NOTE: If desired, a D.E.S.S. key can be used on another vehicle equipped with the D.E.S.S. It only needs to be programmed for that vehicle.

D.E.S.S. Beeper Codes

When starting the engine with a D.E.S.S. key on the post, the key is identified by the ECM and D.E.S.S. signals will be issued according to the key recognition. See table.

D.E.S.S. SIGNAL		DESCRIPTION	COMMENT
BEEPER	DISPLAYED MESSAGE (1)		
2 shorts beeps	WELCOME... or SKI-DOO	Welcome message, good key	Working D.E.S.S. key.
Slow short repetitive beeps	CHECK KEY	Unable to read key (bad connection)	Make sure the key contacts are free of dirt, snow or ice. Reinstall key and restart engine. Vehicle can not be driven.
Fast short repetitive beeps	BAD KEY	Invalid key or key not programmed	Use the proper key for this vehicle or have the key programmed. Vehicle can not be driven.

(1) Only available on premium gauge

PROCEDURES

D.E.S.S. KEY

D.E.S.S. Key Programming

Use the latest B.U.D.S. software available from BOSSWeb.

Carry out the proper connections to use B.U.D.S. Refer to *COMMUNICATION TOOLS/B.U.D.S. SOFTWARE.*

IMPORTANT: Ensure all connections have been made **before starting B.U.D.S.** to allow proper operation.

Start B.U.D.S. and logon.

To read the ECM, click the **Read Data** button.

www.midwestmanuals.com

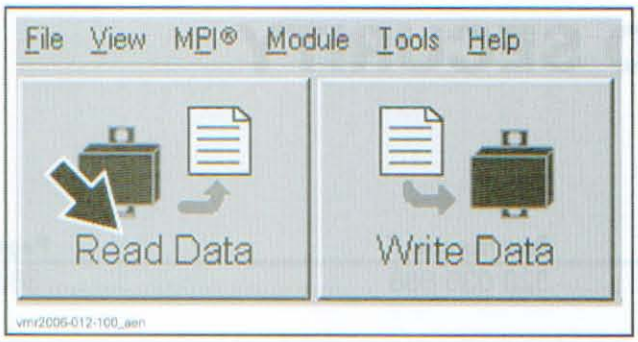

Install the new key to be programmed on vehicle D.E.S.S. post.

Click on **Keys** tab.

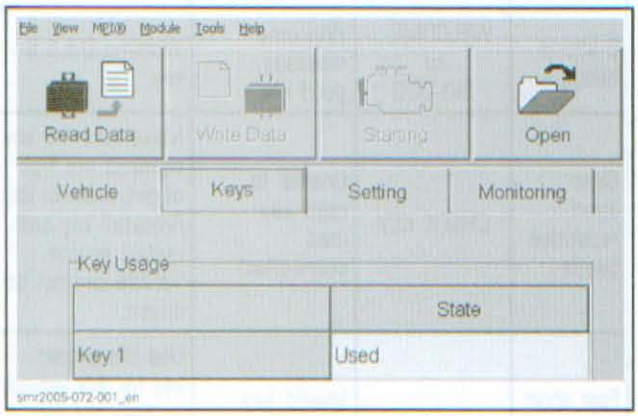

Click on **Add Key** button at bottom of screen.

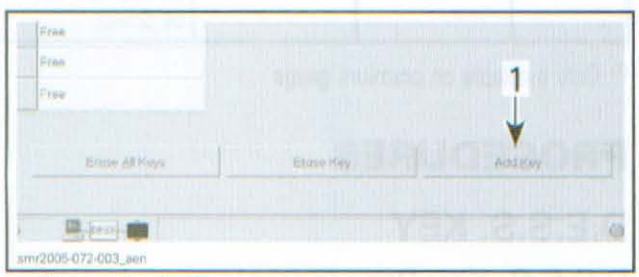

1. *Click on this button*

A new key is now saved in the computer.

NOTE: To program other key(s), install a new key and click again on **Add Key** button.

Save the new key(s) in the ECM by clicking the **Write Data** button.

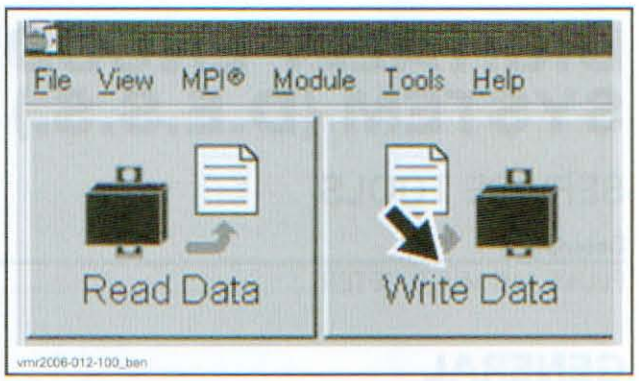

D.E.S.S. POST

D.E.S.S. Post Continuity Test

Remove LH side panel. Refer to *BODY.*

Remove belt guard. Refer to *DRIVE SYSTEM AND BRAKE.*

Remove primary intake silencer. Refer to *AIR INTAKE SYSTEM.*

Remove intake adaptor.

Disconnect D.E.S.S. post connector.

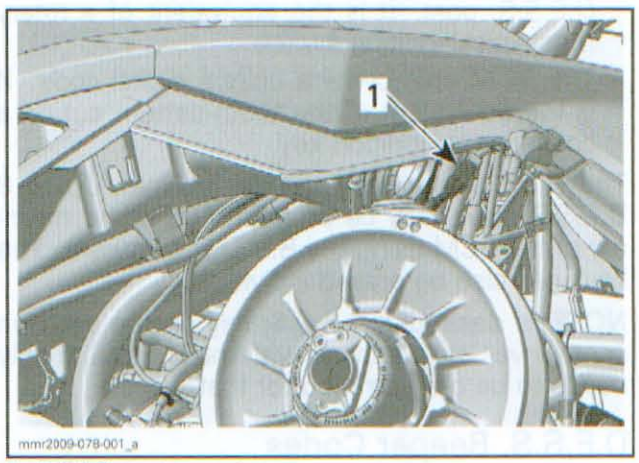

1. *D.E.S.S. post connector*

The following continuity tests can be performed using the FLUKE 115 MULTIMETER (P/N 529 035 868).

D.E.S.S. Key Removed from Post

Set multimeter to Ω.

Connect test probes to D.E.S.S. post and its connector as per tables and measure resistance.

D.E.S.S. POST		RESISTANCE Ω @ 20°C (68°F)
WIRE		
BLACK/ GREEN	BLACK/ WHITE	Open circuit

www.midwestmanuals.com

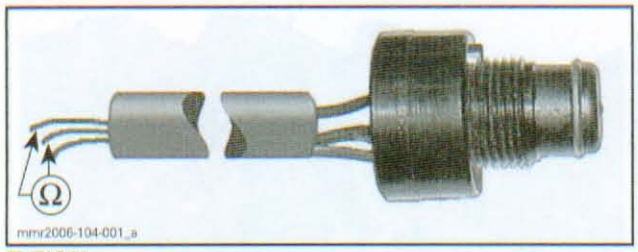

TYPICAL

D.E.S.S. POST		RESISTANCE Ω @ 20°C (68°F)
WIRE		
WHITE/ GRAY	Post terminal	Close to 0 Ω

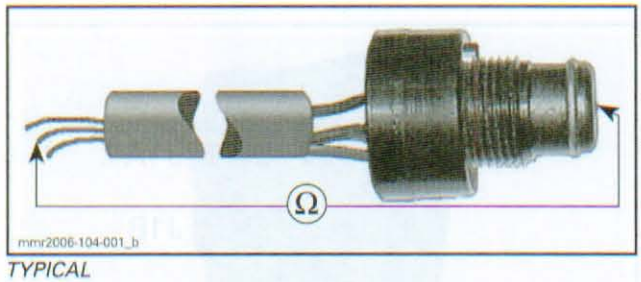

TYPICAL

D.E.S.S. POST		RESISTANCE Ω @ 20°C (68°F)
WIRE		
BLACK/ GREEN	Post ring	Close to 0 Ω

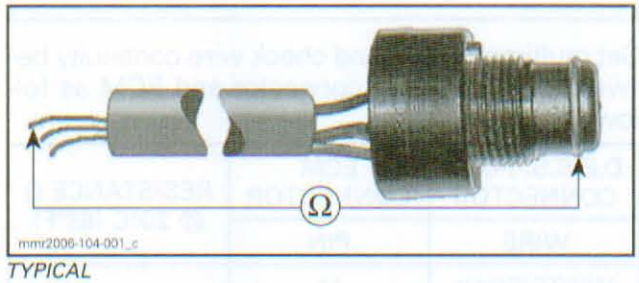

TYPICAL

D.E.S.S. Key on Post

Connect test probes to D.E.S.S. post connector as per table and measure resistance.

D.E.S.S. POST		RESISTANCE Ω @ 20°C (68°F)
WIRE		
BLACK/ GREEN	BLACK/ WHITE	Close to 0 Ω

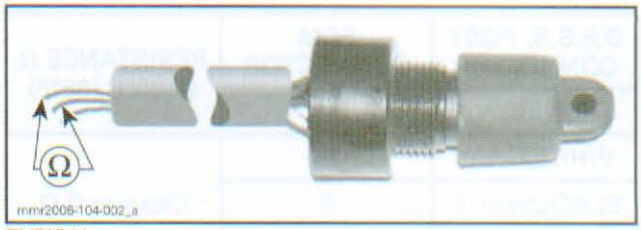

TYPICAL

If any resistance test fails, replace D.E.S.S. post.

D.E.S.S. Post Vehicle Harness Continuity Test

500SS/600/800R

Disconnect D.E.S.S. post connector.

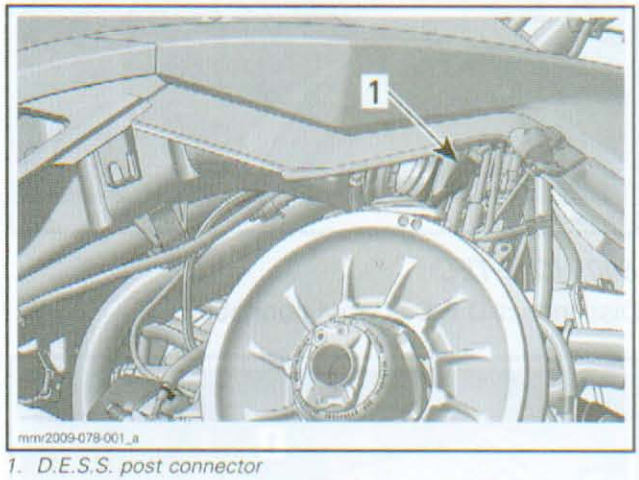

1. D.E.S.S. post connector

Disconnect ECM connector.

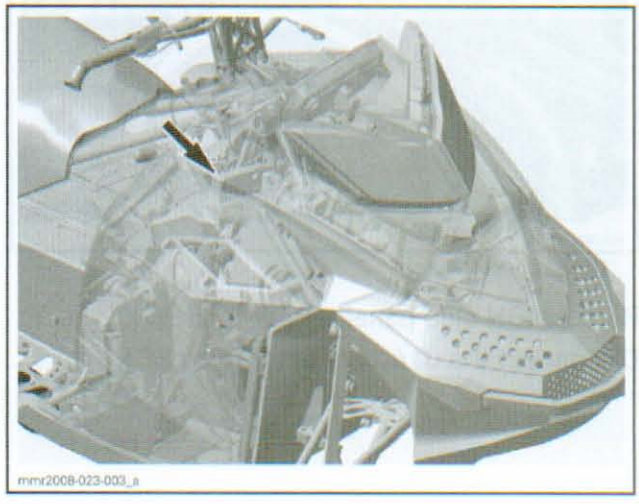

Set multimeter to Ω and check wire continuity between D.E.S.S. post connector and ECM as follows.

www.midwestmanuals.com

D.E.S.S. POST CONNECTOR	ECM CONNECTOR	RESISTANCE Ω @ 20°C (68°F)
WIRE	PIN	
WHITE/GRAY	24	Close to 0 Ω
BLACK/WHITE	6	
BLACK/GREEN	1	

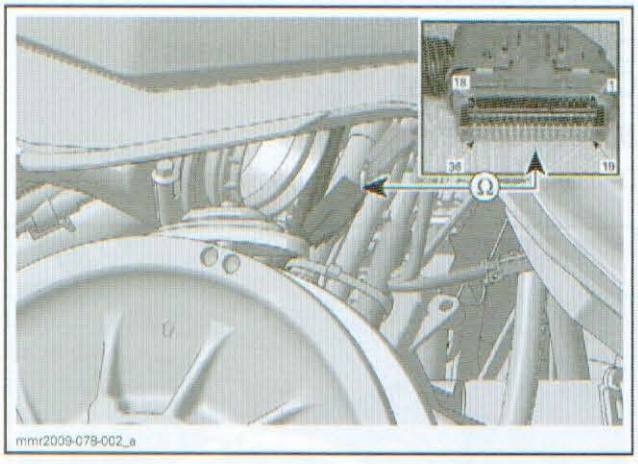

mmr2009-078-002_a

600 HO E-TEC

Disconnect D.E.S.S. post connector.

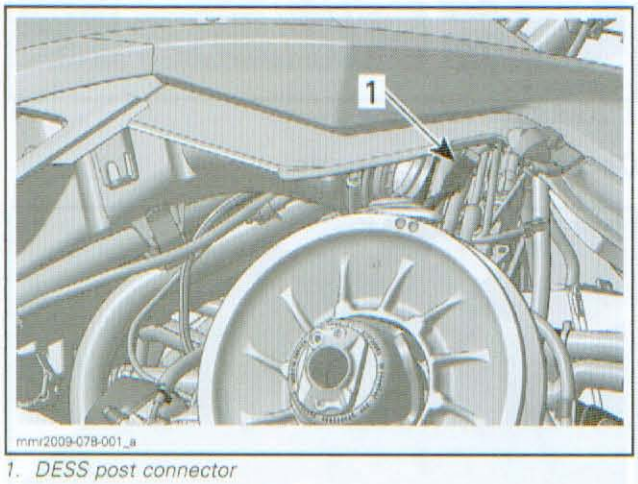

mmr2009-078-001_a

1. DESS post connector

Remove RH side panel. Refer to *BODY*.

Disconnect the J1A connector from ECM.

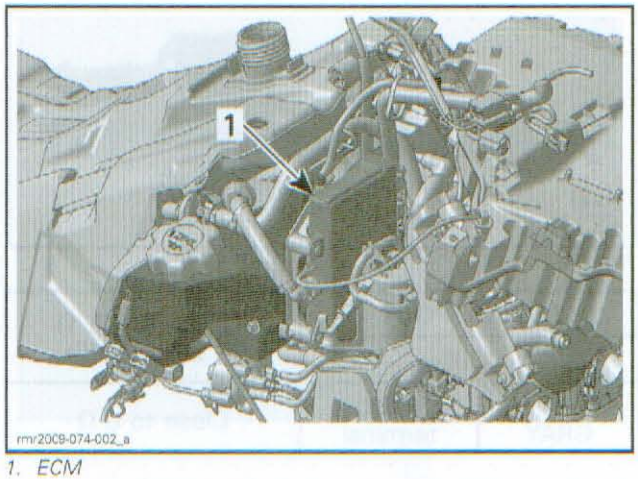

mmr2009-074-002_a

1. ECM

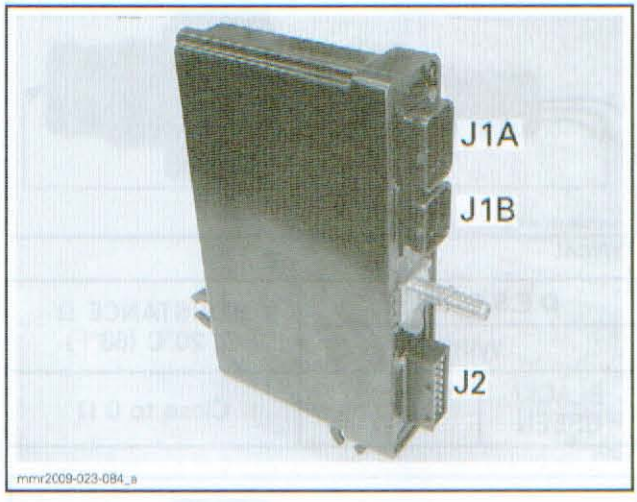

mmr2009-023-084_a

Set multimeter to Ω and check wire continuity between D.E.S.S. post connector and ECM as follows.

D.E.S.S. POST CONNECTOR	ECM CONNECTOR	RESISTANCE Ω @ 20°C (68°F)
WIRE	PIN	
WHITE/GRAY	11	Close to 0 Ω
BLACK/WHITE	23	
BLACK/GREEN	5	

www.midwestmanuals.com

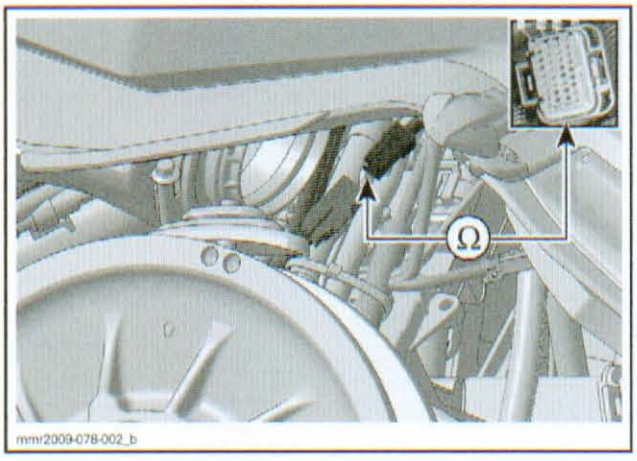

All Models

- If any continuity test failed, repair or replace wiring connectors/terminals.
- If problem persists and all tests have been performed, try a new ECM. Refer to *ECM REPLACEMENT.*

Reinstall removed parts.

BEEPER

The beeper is integrated in the multifunction gauge and cannot be replaced alone.

If the beeper does not sound when starting engine, check the beeper operation. Refer to *LIGHTS, GAUGE AND ACCESSORIES.*

www.midwestmanuals.com

www.midwestmanuals.com

ROTAX ELECTRONIC REVERSE

SERVICE TOOLS

Description	Part Number	Page
12 VOLT BATTERY SUPPLY CABLE	529 035 997	392–394, 396
FLUKE 115 MULTIMETER	529 035 868	393, 395
T-HARNESS	529 035 869	392–394, 396

GENERAL

The main components of the RER system are:
- START/RER switch
- ECM
- Trigger coils (500SS/600/800R)
- Crankshaft position sensor (600 HO E-TEC).

The ECM receives signals from both trigger coils (or the CPS) for forward and reverse engine rotation.

The ECM recognizes a signal sent by the START/RER switch.

When the START-RER switch is activated and the engine is running at or near idle speed, the ECM cuts off ignition, therefore causing the engine RPM to drop off gradually.

When the engine reaches a predetermined low RPM (approximately 450 RPM), the ECM initiates an ignition spark that is greatly advanced in timing, creating a thrust which reverses engine rotation.

Below a low RPM threshold, or above 4300 RPM, the RER function is disabled and nothing takes place when the RER button is pressed.

NOTE: Refer to *IGNITION SYSTEM* for trigger coil testing.

NOTE: Refer to *E-TEC DIRECT FUEL INJECTION* for crankshaft position sensor (CPS) testing.

TROUBLESHOOTING

DIAGNOSTIC TIPS

RER Does Not Respond When Depressing RER Button

Manual Start Models (500SS/600/800R)

Check the following:
- *RER SWITCH CONTROL CIRCUIT TEST*
- ECM.

Manual Start Models (600 HO E-TEC)

Check the following:
- Manual start connector (jumper) is installed
- 5 A RER fuse condition
- *RER SWITCH SIGNAL TEST WITH B.U.D.S.*

Electric Start Models (500SS/600/800R)

The START and RER control circuits are almost the same. If vehicle started normally, test the following:
- *RER SWITCH SIGNAL CIRCUIT TEST*
- ECM.

Electric Start Models (600 HO E-TEC)

Check the following:
- *RER SWITCH SIGNAL TEST WITH B.U.D.S.*

Engine Stops after Pressing RER Button

This confirms that RER control circuits function normally. Check the following:
- Trigger coil (500SS/600/800R)
- CPS (600 HO E-TEC)
- Reed valves leaking, refer to applicable *TOP END* section
- RAVE valve adjustment or sticking, refer to applicable *RAVE* section
- Drive belt adjustment, refer to *DRIVE SYSTEM AND BRAKE* section
- ECM.

RER Functions Erratically

1. Check engine compression.

NOTE: A low compression resulting in loss of engine power may cause the RER to function erratically, leading you to believe the problem is in the electronic control system.

2. Low compression may be due to the following items:
   - REED valves leaking or broken
   - RAVE valves sticking
   - Worn engine parts.

www.midwestmanuals.com

3. Check piston condition through the intake and exhaust ports.

NOTE: Look for scoring on piston skirts. Scored piston skirts or other mechanical problems resulting in excessive friction which may cause the RER to function erratically.

4. Also check the following:
   - RER switch for intermittent operation, refer to *RER SWITCH CONTINUITY TEST* in this section
   - Loose (intermittent) electrical connections
   - Drive belt adjustment, refer to *DRIVE SYSTEM AND BRAKE* section
   - ECM.

PROCEDURES

RER FUSE (600 HO E-TEC)

The RER circuit is protected by a 5 A fuse attached to the oil tank.

RER Fuse Location

The RER fuse is attached to the bottom of the oil tank.

To access fuse, open RH side panel. Refer to *BODY* section.



TYPICAL - MANUAL START MODEL ILLUSTRATED
1. RER fuse

NOTE: The **Manual Start Connector** (jumper) can be seen attached to oil tank in previous illustration.

RER Fuse Inspection

Check if filament is melted. Replace as necessary.

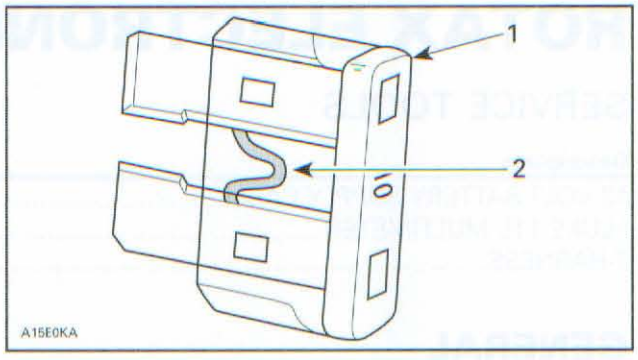

1. Fuse
2. Check if melted

NOTICE Do not use a higher rated fuse as this can cause severe damage to electric components and/or a fire. If fuse has burnt out, the cause of the malfunction should be determined and corrected before restarting.

RER SWITCH (500SS/600/800R)

RER Switch Signal Test with B.U.D.S.

Install the following items to supply power to the ECM for this test.

- T-HARNESS (P/N 529 035 869)
- 12 VOLT BATTERY SUPPLY CABLE (P/N 529 035 997)
- 12 volt battery.

NOTE: On electric start models, the 12 volt supply harness may be connected to the vehicle battery instead of an external battery.

1. Connect the vehicle to the latest B.U.D.S. software available from BOSSWeb. Refer to *COMMUNICATION TOOLS/B.U.D.S SOFTWARE* for proper connection instructions.
2. In B.U.D.S., select the **Read Data** button.
3. Select the **Monitoring** tab.
4. At the bottom LH corner of the **Monitoring** page, select the **ECM** tab.
5. Set engine STOP switch to STOP.
6. Press the START/RER button and look for the **START/RER Button** LED in the bottom field. It should turn ON, indicating START/RER switch, ECM and wiring are functioning normally.

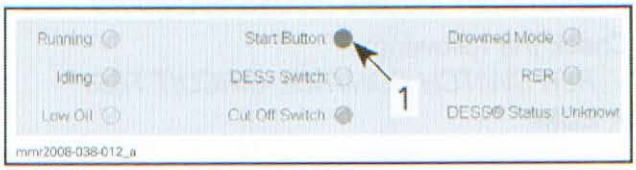

TYPICAL
1. Should turn ON (green)

www.midwestmanuals.com

If light turns on, test trigger coils and associated wiring. Refer to *IGNITION SYSTEM* section.

If light does not turn on, refer to *RER SWITCH CONTINUITY TEST* in this section.

RER Switch Continuity Test

Remove multifunction gauge. Refer to *BODY* section.

Disconnect the 13-pin HG connector (steering harness).

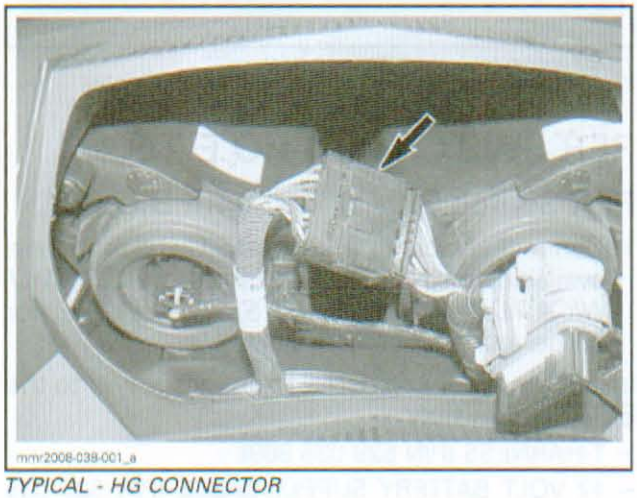

TYPICAL - HG CONNECTOR

Set the FLUKE 115 MULTIMETER (P/N 529 035 868) to Ω selection and measure RER switch continuity as per following table.

SWITCH POSITION	HG CONNECTOR		RESISTANCE
Released	Pin 5 RED/GRAY	Pin 8 BEIGE	High value or infinite (OL)
Pressed and held			Continuity (0.2 Ω max.)

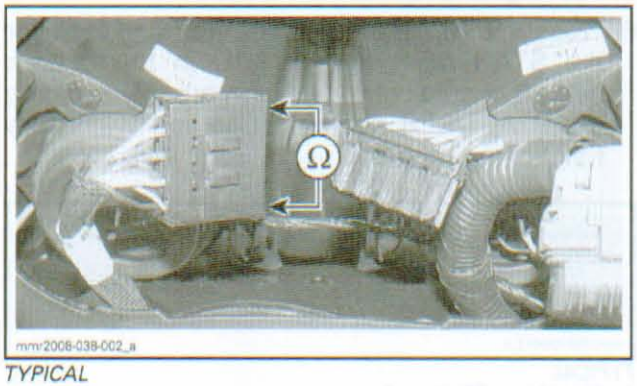

TYPICAL

If continuity test fails, remove the multifunction switch cover and check wires and connectors to START/RER switch.

If wires and connector are good, replace the multifunction switch.

RER Switch Input Voltage Test

If RER switch continuity tests were good, measure voltage on harness side of HG connector as follows.

Manual Start Models

Install the following items to supply power to the ECM for this test.

- T-HARNESS (P/N 529 035 869)
- 12 VOLT BATTERY SUPPLY CABLE (P/N 529 035 997)
- 12 volt battery.

Refer to *COMMUNICATION TOOLS AND B.U.D.S. SOFTWARE* subsection for proper connection details.

Install DESS key on post.

All Models

Set multimeter to Vdc and measure as per following table.

HG CONNECTOR		VOLTAGE
Pin 5 (RED/GRAY)	Chassis ground	12 Vdc

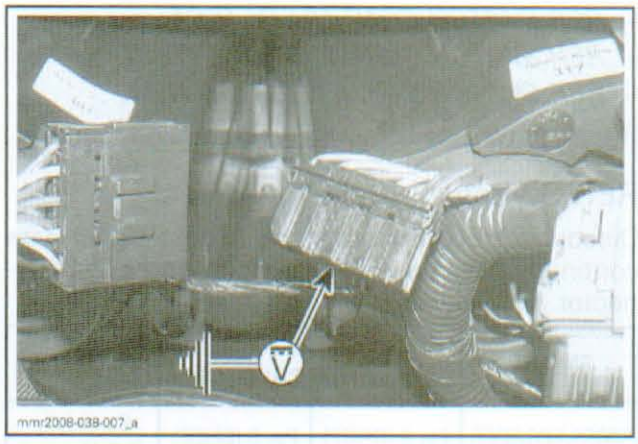

If voltage is good, carry out a *RER SWITCH SIGNAL CIRCUIT TEST*.

If voltage is not as specified, carry out a continuity test of the RED/GRAY power wire:

- On **manual start models**, ECM pin 34 to HG connector pin 5
- On **electric start models**, CF connector pin 3 to HG connector pin 5 (RED/GRAY power wire).

www.midwestmanuals.com

RER Switch Output Voltage Test

Measure switch voltage output from vehicle harness side of HG connector as per following table.

SWITCH POSITION	WIRES		RESISTANCE
Pressed and held	Pin 8 (BEIGE)	GROUND	Approximately 12 Vdc
Released	Pin 8 (BEIGE)	GROUND	Close to 0 Vdc

If test fails, replace switch.

RER Switch Control Circuit Test

1. Disconnect ECM connector.
2. Set multimeter to Ω selection.
3. As you press and hold the RER switch, measure for continuity of the control circuit at the ECM connector as per following table.

RER SWITCH POSITION	ECM CONNECTOR		RESISTANCE
Pressed and held in	Pin 8 (BEIGE)	Pin 34 (RED/GRAY)	Close to 0 Ω continuity

If continuity test fails, carry out the following tests in this order:

- *RER SWITCH CONTINUITY TEST*
- *RER SWITCH SIGNAL CIRCUIT TEST*
- *RER SWITCH INPUT VOLTAGE TEST.*

Repair or replace affected wiring or connections.

RER Switch Signal Circuit Test

Disconnect ECM connector and test signal wire continuity between HG connector and ECM connector as follows.

ENGINE	HG CONNECTOR	ECM CONNECTOR	RESISTANCE
500SS/600/800R	Pin 8 (BEIGE)	Pin 8 (BEIGE)	Continuity (0.2 Ω max.)

If it tests good, try a new ECM.

If test fails, repair open circuit.

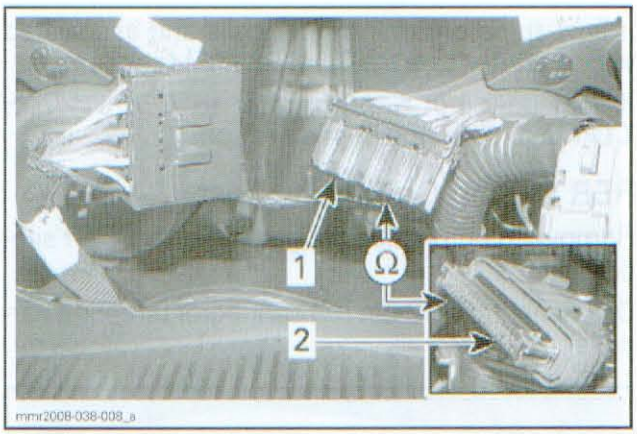

1. *HG connector (vehicle harness side)*
2. *ECM connector*

RER SWITCH (600 HO E-TEC)

RER Switch Signal Test with B.U.D.S.

1. Connect vehicle to the latest B.U.D.S. software available from BOSSWeb. Refer to *COMMUNICATION TOOLS/B.U.D.S. SOFTWARE* for proper connection instructions.

Install the following items to supply power to the ECM for this test.

- T-HARNESS (P/N 529 035 869)
- 12 VOLT BATTERY SUPPLY CABLE (P/N 529 035 997)
- 12 volt battery.

NOTE: On electric start models, the 12 volt supply harness may be connected to the vehicle battery instead of an external battery.

2. In B.U.D.S., select the **Read Data** button.
3. Select the **Monitoring** tab.
4. At the bottom LH corner of the **Monitoring** page, select the **ECM** tab.
5. Set engine STOP switch to STOP.
6. Press vehicle START/RER button and look for the **START/RER Button** LED in the bottom field. It should come ON (turn green) indicating the START/RER switch, ECM and wiring are functioning properly.

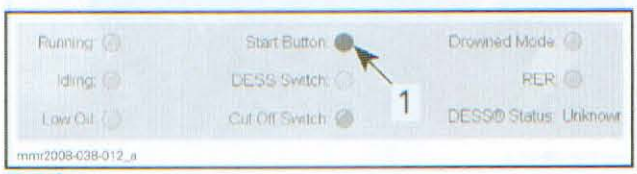

TYPICAL
1. *Should turn ON (green)*

If LED comes ON, test CPS. Refer to *E-TEC DIRECT INJECTION.*

www.midwestmanuals.com

If LED does not come on, test the START/RER switch.

NOTE: When the B.U.D.S. RER test is carried out with engine running, when reverse engages, the RER LED on the ECM Monitoring page and the reverse LED on the Cluster Monitoring page should both turn ON (green).

RER Switch Continuity Test

1. Remove steering cover.
2. Disconnect the START/RER switch 3-pin (SB) connector.

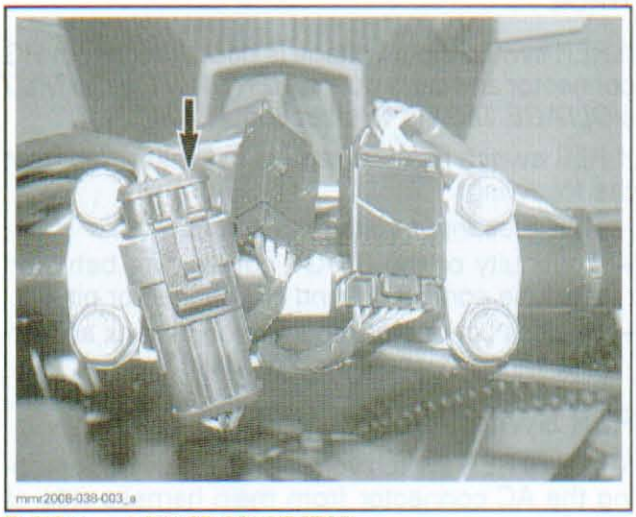

TYPICAL — 3 PIN SB CONNECTOR

3. Using the FLUKE 115 MULTIMETER (P/N 529 035 868) set to Ω, measure continuity of RER switch as per following table.

SWITCH POSITION	SB CONNECTOR		RESISTANCE
Released	Pin 1 (BK)	Pin 2 (RD)	Continuity (0.2 Ω max.)
		Pin 3 (WH)	High value or infinite (OL)
Pressed and held	Pin 1 (BK)	Pin 2 (RD)	High value or infinite (OL)
		Pin 3 (W)	Continuity (0.2 Ω max.)

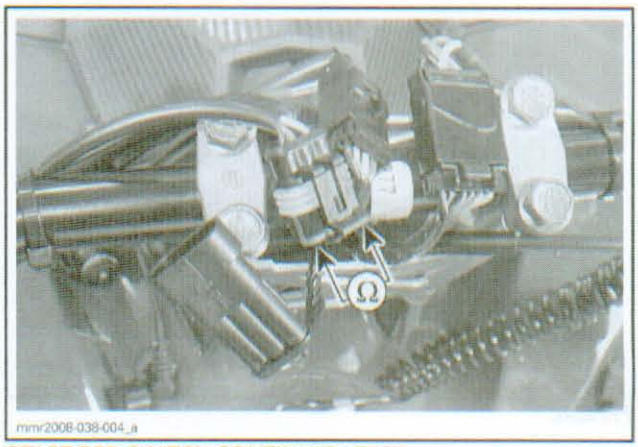

START/RER SWITCH CONTINUITY TEST

If continuity test fails, replace switch.

If continuity test is good, reconnect SB connector.

4. Remove multifunction gauge, refer to *BODY* subsection.
5. Disconnect the 11-pin (HG) connector and the 8-pin (AC) connector.

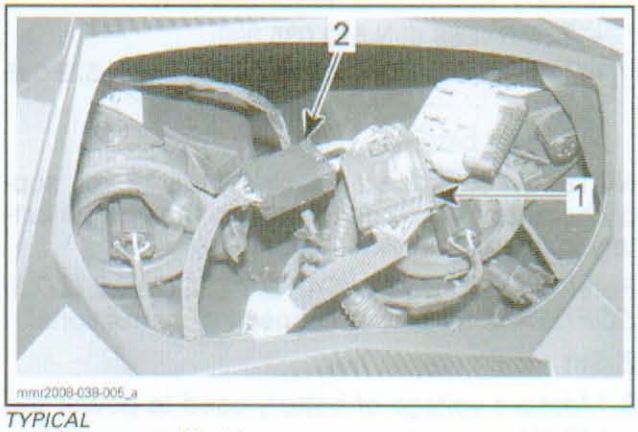

TYPICAL
1. HG connector (11-pin)
2. AC connector (8-pin)

6. Test for continuity as per following table.

SWITCH POSITION	CONNECTORS		RESISTANCE
	11-pin (HG)	8-pin (AC)	
Released	Pin 1 (BK/BU)	Pin 3 (BE)	Continuity (0.2 Ω max.)
	Pin 6 (RD/BR)	Pin 3 (BE)	High value or infinite (OL)
Pressed and held	Pin 1 (BK/BU)	Pin 3 (BE)	High value or infinite (OL)
	Pin 6 (RD/BR)	Pin 3 (BE)	Continuity (0.2 Ω max.)

www.midwestmanuals.com

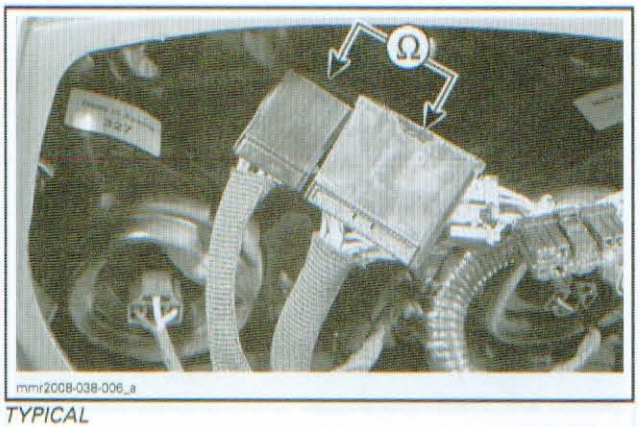

TYPICAL

If continuity test fails, repair steering harness between HG and SB connectors.

If continuity tests were good, measure voltage on vehicle harness side of HG connector as per *RER SWITCH INPUT VOLTAGE TEST*.

RER Switch Input Voltage Test

1. Install the following tools to supply power to the primary 12 Vdc circuits for this test:
   - T-HARNESS (P/N 529 035 869)
   - 12 VOLT BATTERY SUPPLY CABLE (P/N 529 035 997)
   - 12 volt battery.

NOTE: On electric start models, the 12 volt supply harness may be connected to the vehicle battery instead of an external battery.

Refer to *COMMUNICATION TOOLS/B.U.D.S. SOFTWARE* for proper connection instructions.

2. Set multimeter to Vdc.
3. Measure voltage of battery used to power the vehicle.
4. Disconnect the HG connector and measure RER switch input voltage at the HG connector (vehicle harness side) as follows.

11-PIN (HG) CONNECTOR		VOLTAGE
Pin 6 (RD/GY)	Chassis ground	Battery voltage

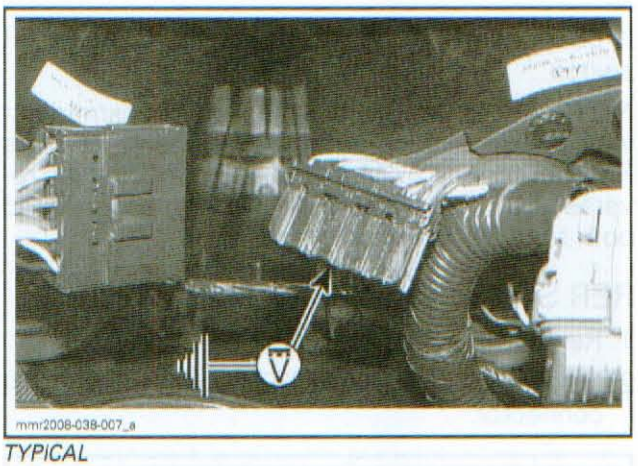

TYPICAL

If RER switch input voltage is good, reconnect HG connector and carry out an *RER SWITCH OUTPUT VOLTAGE TEST* in this section.

If RER switch input voltage is not measured, test the following:

- RER fuse input voltage at contact "A".
- Continuity of the RD/GY power wire between the fuse contact "B" and HG connector pin 6.
- By-pass connector mounted on oil tank and circuit wiring (manual start models).

RER Switch Output Voltage Test

Measure RER switch voltage output by back-probing the AC connector from main harness side of steering connector as follows.

SWITCH POSITION	AC CONNECTOR		RESISTANCE
Released	Pin 3 (BE)	Chassis ground	Close to 0 Vdc
Pressed and held			Approximately 12 Vdc

If RER switch output voltage test failed, replace switch.

If RER switch output voltage test is good, carry out the *RER SWITCH CONTINUITY TEST TO ECM*.

RER Switch Continuity Test to ECM

1. Disconnect the AC connector and ECM J1A connector.
2. Test wire continuity between the 8-pin (AC) connector and the ECM connector as follows.

www.midwestmanuals.com

AC CONNECTOR	ECM J1A CONNECTOR	RESISTANCE
Pin 3 (RD/GN)	Pin 28 (RD/GN)	Continuity (0.2 Ω max.)
Pin 3 (RD/GN)	Chassis ground	Infinite (OL)

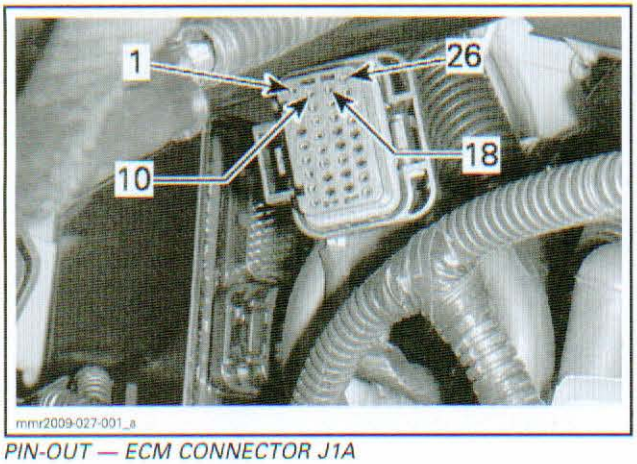

PIN-OUT — ECM CONNECTOR J1A

If continuity test is good, try a new ECM.

If test fails, repair or replace wiring.

BEEPER (REVERSE ALARM)

The reverse alarm (beeper) is integrated in the gauge cluster and is also used for emitting the vehicle beep codes. If the beeper does not function, replace the gauge.

To test it, start vehicle. You should hear the beeper on start up. If you do not hear the beeper on start up, check for fault codes and refer to *MONITORING SYSTEM/FAULT CODES* section.

Press the START/RER button to put the vehicle in reverse. You should hear slow long beeps advising you that you are in reverse.

If you hear 3 short beeps, the reverse selection failed. Try the procedure again.

www.midwestmanuals.com

www.midwestmanuals.com

LIGHTS, GAUGE AND ACCESSORIES

SERVICE TOOLS

Description	Part Number	Page
12 VOLTS BATTERY SUPPLY CABLE	529 035 997	399–400
FLUKE 115 MULTIMETER	529 035 868	413
FLUKE 115 MULTIMETER	529 035 868	402
T-HARNESS	529 035 869	399–400

SERVICE TOOLS – OTHER SUPPLIER

Description	Part Number	Page
MULTILOCK - TERMINAL EXTRACTION TOOL	755430-2	420

GENERAL

NOTE: On applicable models, it is a good practice to check for fault codes using B.U.D.S. software as a first troubleshooting step. Refer to *MONITORING SYSTEM/FAULT CODES*.

⚠ CAUTION The charging system fuse should always be removed before carrying out any maintenance on the vehicle to prevent any unexpected electrical activation. Removal of this fuse isolates the battery from the vehicle electrical system, except for the starter relay input terminal.

⚠ WARNING

Torque wrench tightening specifications must be strictly adhered to. Locking devices (e.g.: locking tabs, elastic stop nuts, self-locking fasteners, cotter pins, etc.) must be replaced with new ones.

600 HO E-TEC

NOTICE The 12 Vdc primary circuit is not to be used to power accessory loads. All accessories are to be powered from the secondary 12 Vdc circuit.

TROUBLESHOOTING

LIGHTING AND ACCESSORIES SYSTEM TESTING

500SS/600/800R

All vehicle lights and accessories are powered from the accessories relay (R1) through one of two fuses, FC and FD.

When the engine reaches 800 RPM, the ECM will provide a ground to R1 which will close its contacts and power all vehicle lights and accessories.

Refer to *WIRING DIAGRAM* for circuit details.

To provide power to the lighting and accessories systems for testing, install the following items.

- T-HARNESS (P/N 529 035 869)
- 12 VOLTS BATTERY SUPPLY CABLE (P/N 529 035 997)
- 12 volts battery.

Refer to the *COMMUNICATION TOOLS AND B.U.D.S. SOFTWARE* subsection for proper connections.

NOTE: It is not necessary to connect the MPI-2 interface unless a test calls for a connection to B.U.D.S. software.

600 HO E-TEC

All vehicle lights are powered from the primary 12 Vdc circuit. This circuit is powered from and controlled by the ECM when the engine reaches 800 RPM.

There are no relays or fuses outside the ECM to test or replace for the lights circuits. Refer to *CHARGING SYSTEM* for more information on testing the primary 12 Vdc circuits.

If a light does not come ON, carry out the following:

- Obtain access to the bulb and make sure it is not burnt.
- Test for input voltage to the bulb.
- Test for continuity of the ground circuit.
- Test the applicable control switch (brake switch, headlight switch).

www.midwestmanuals.com

All accessories such as heating devices and accessory outlets are powered from the secondary 12 Vdc system.

Refer to *WIRING DIAGRAM* for light circuit details.

To provide power to the lighting and accessories systems for testing, install the following items.

- T-HARNESS (P/N 529 035 869)
- 12 VOLTS BATTERY SUPPLY CABLE (P/N 529 035 997)
- 12 volts battery.

Refer to the *COMMUNICATION TOOLS AND B.U.D.S. SOFTWARE* subsection for proper connections.

NOTE: It is not necessary to connect the MPI-2 interface unless a test calls for a connection to B.U.D.S. software, or the accessory circuit to test is powered from the secondary 12 Vdc circuit.

Headlights should turn ON as soon as vehicle is connected as described in *COMMUNICATION TOOLS AND B.U.D.S. SOFTWARE*, or engine is started and running above 800 RPM.

The secondary 12 Vdc circuits (accessory circuits) come ON 2 seconds after the engine reaches 1900 RPM.

The secondary 12 Vdc circuits will also come ON when the vehicle is connected with the MPI-2 interface as described in *COMMUNICATION TOOLS AND B.U.D.S. SOFTWARE*.

The **accessory relay** is then activated using the button provided on the **ECM Activation** page. Refer to *ACCESSORY CIRCUIT TEST WITH B.U.D.S.*

NOTE: The accessories relay for the 600 HO E-TEC is internal to the ECM.

ACCESSORY CIRCUIT TEST WITH B.U.D.S.

600 HO E-TEC

1. The accessory circuits can be powered for testing using the B.U.D.S. software.
2. Connect to the latest B.U.D.S. software applicable using the MPI-2 interface, refer to *COMMUNICATION TOOLS AND B.U.D.S. SOFTWARE* section.
3. In B.U.D.S., select **Read Data**.
4. Select the **Activation** tab.
5. At the bottom of the **Setting** page, select the **ECM** tab.
6. On the RH side of the page, select the **Accessory Relay** button.

12 Vdc power is now available for the following:

- 12 volt accessories connector
- Heated handle grips
- Heated throttle lever.

If the relay does not function, see procedure in this section.

PROCEDURES

FUSES

Fuse Inspection

Check if filament is melted. Replace as necessary.

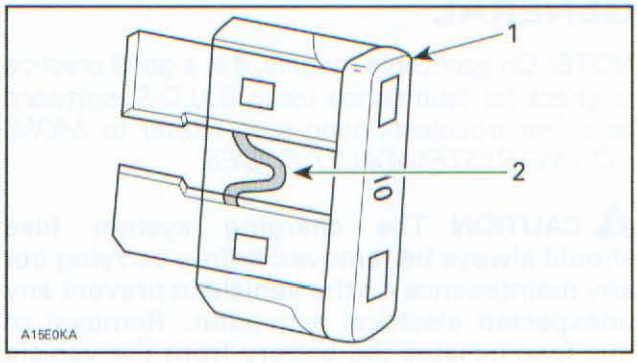

1. Fuse
2. Check if melted

NOTICE **Do not use a higher rated fuse as this can cause severe damage to electric components and/or a fire. If fuse has burnt out, the cause of the malfunction should be determined and corrected before restarting.**

Fuse Location

All fuses except for the fuel level sensor fuse are located near the battery. The following illustrations depict the locations of the various fuses as in an electric start model. The fuse(s) applicable to the manual start models will be in the same locations.

www.midwestmanuals.com

500SS/600/800R

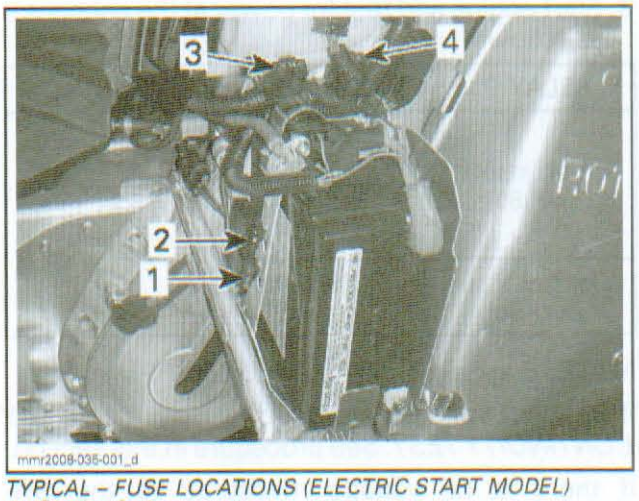

TYPICAL – FUSE LOCATIONS (ELECTRIC START MODEL)
1. *Starting fuse*
2. *Charging system fuse*
3. *Accessories fuse*
4. *Headlights fuse*

600 HO E-TEC

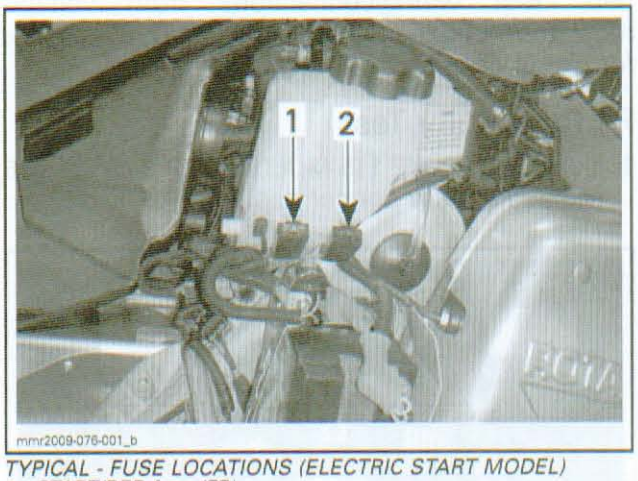

TYPICAL - FUSE LOCATIONS (ELECTRIC START MODEL)
1. *START/RER fuse (FB)*
2. *Charging fuse (FA)*

All Models

Fuel Level Sensor Fuse

The fuel level sensor circuit is protected by an in line fuse located near the sensor. It is an integral part of the wiring that comes with the sensor assembly.

NOTE: If you have a faulty fuel level indication, or a low fuel level warning light continuously ON even on a full fuel tank, test the fuse for continuity and ensure the fuse and its holder make good contact. Also check to ensure the fuse connector is properly connected.

To access the fuel level sensor fuse, remove the primary silencer from the engine air inlet system.

NOTE: In the following illustration, the fuel tank was moved back for access and clarity of illustration.

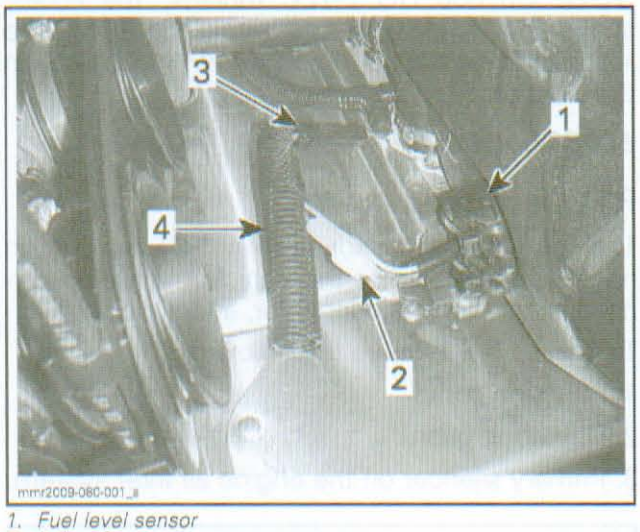

1. *Fuel level sensor*
2. *In-line fuse*
3. *Connector*
4. *Corrugated flex conduit*

Fuse Description

500SS/600/800R

MODEL	FUSE	DESCRIPTION	LOCATION
Manual start	15 A	Headlight (FD)	Attached to oil tank
	20 A	Gauge and Accessories (FC)	
Electric start	5 A	START/RER (FB)	LH side of battery support
	15 A	Headlight (FD)	Attached to oil tank
	15 A	Gauge and Accessories (FC)	
	30 A	Charging system (FA)	LH side of battery support
All	0.25 A	Fuel level sensor (in-line type)	Behind primary air inlet silencer

600 HO E-TEC

MODEL	FUSE	DESCRIPTION	LOCATION
Electric start	30 A	Charging system (FA)	LH side of battery support
All	5 A	START/RER (FB)	LH side of battery support
	0.25 A	Fuel level sensor (in-line type)	Behind primary air inlet silencer

www.midwestmanuals.com

RELAY R1 (LIGHTS AND ACCESSORIES)

NOTE: On 600 HO E-TEC models, the accessories relay is incorporated within the ECM. See *ACCESSORY CIRCUIT TEST WITH B.U.D.S.* in this section.

500SS/600/800R

R1 Description

The lights and accessories relay (R1) is a plug in relay type attached to the vehicle main wire harness by its harness connector, and a locking tie.

To access R1, remove the following:

1. Left side panel
2. Drive belt guard
3. Primary silencer on the engine air inlet system.

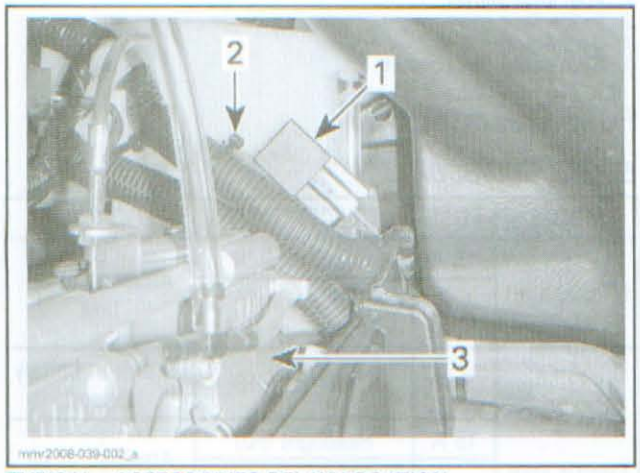

TYPICAL - ACCESSORIES RELAY LOCATION
1. *Lights and accessories relay (R1)*
2. *R1 locking tie*
3. *Throttle bodies*

It receives power to its input contact (pin 30) and activation coil (pin 85) directly from the voltage regulator/rectifier when the engine is running. The ECM (pin 28) provides the ground signal to the coil (pin 86) when the engine reaches approximately 800 RPM.

Once closed, it supplies power to the lights and accessories:

- Headlights
- High beams indicator signal
- Tail/brake light
- Handle grips and throttle lever heaters
- 12 volt accessory connector.

R1 Input Voltage Test

1. Cut locking-tie securing relay to harness.
2. Remove R1 relay from its connector.
3. Start engine and test for power at the connector as follows.

RELAY R1	PROBE	VOLTAGE
Coil input (pin 85)	RD/BU and OR/WH	10.5 to 13.5 Vdc
	RD/BU and ground	
Contact input (pin 30)	RD/BU and ground	

NOTE: Engine idling (1500 to 1600 RPM).

If R1 input voltages are good, carry out a *RELAY CONTINUITY TEST*. See procedure in this section.

If there is no voltage measured to the ORANGE/WHITE wire, test continuity of ground signal circuit from ECM (ORANGE/WHITE wire at relay connector to ECM connector pin 28).

If R1 input voltages are not as specified, test wiring/connections from voltage regulator/rectifier. Refer to *WIRING DIAGRAM* for circuit details.

R1 Continuity Test

1. Using the FLUKE 115 MULTIMETER (P/N 529 035 868), select the beeper position.

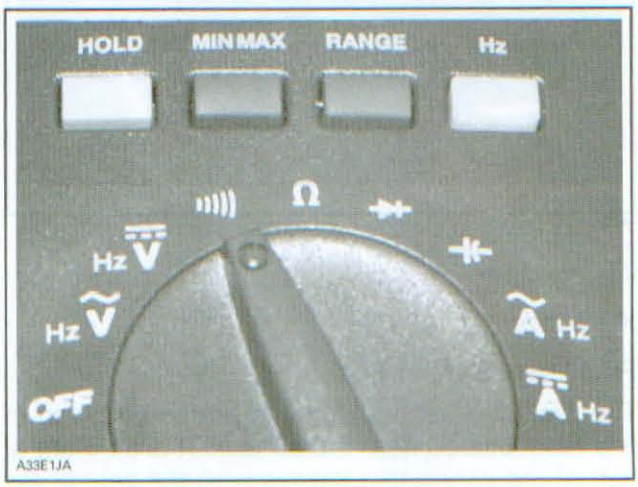

2. Position the RED probe on the terminal 30 and the BLACK probe on the terminal 87a.

www.midwestmanuals.com

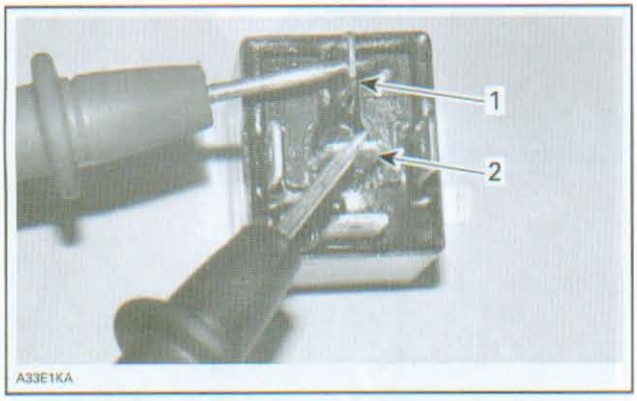

1. Terminal 30
2. Terminal 87a

A continuous signal should be audible. If not, replace the relay.

3. If a signal is audible, apply 12 volts on terminals 85 and 86 then place the RED probe on terminal 30 and the BLACK on the terminal 87.

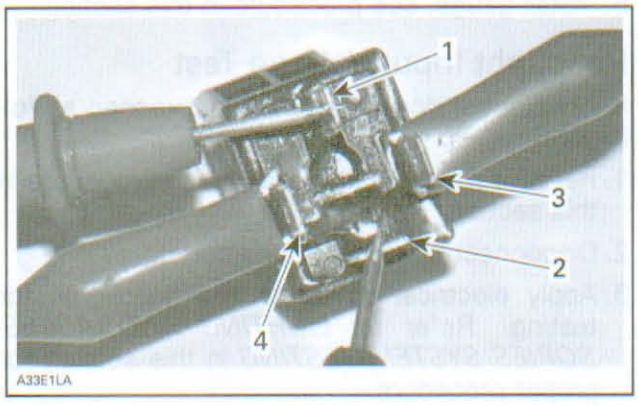

1. Terminal 30
2. Terminal 87
3. Terminal 85
4. Terminal 86

The audible signal should be continuous. If not, replace the relay.

HEADLIGHTS

Headlight Bulb Removal

If a headlight bulb is burnt, proceed as follows.

1. Remove multifunction gauge, see procedure in this section.
2. Remove bulb connector.
3. Remove top and center portion of rubber boot from headlight assembly.

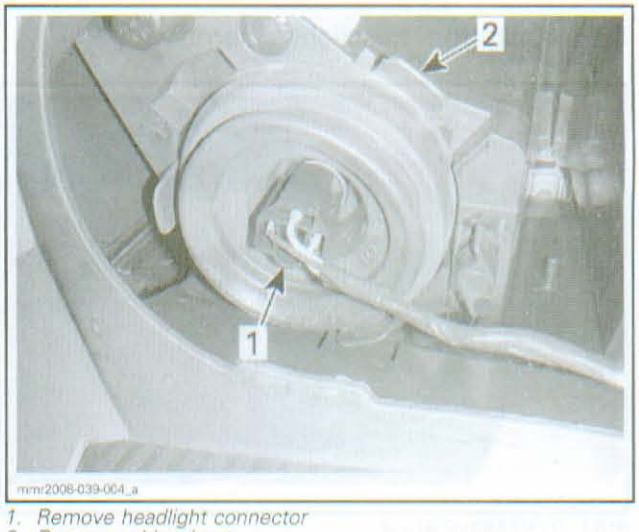

1. Remove headlight connector
2. Remove rubber boot

NOTE: It is not necessary to fully remove rubber boot.



4. Press both sides of the bulb holder (spring clip) inwards at the same time, and pull it out to release it from the bulb support.



SQUEEZE INWARDS AND PULL OUT

www.midwestmanuals.com

5. Pull bulb from headlight assembly.

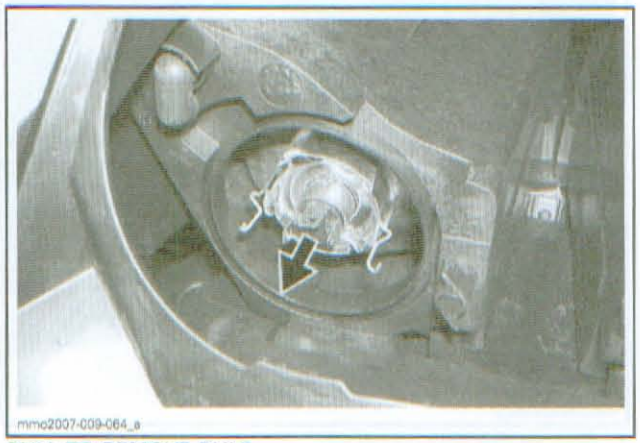

PULL TO REMOVE BULB

Headlight Bulb Installation

NOTICE **Never touch glass portion of a halogen bulb with bare fingers, it shortens its operating life. If glass is touched, clean it with isopropyl alcohol which will not leave a film on the bulb.**

1. Insert bulb in light assembly.

NOTE: Widest alignment tab on bulb should be at top of assembly.

2. Insert top of bulb holder (spring clip) as you squeeze the two sides inwards. Release bulb holder so that it locks in the grooves on either side of headlight assembly.

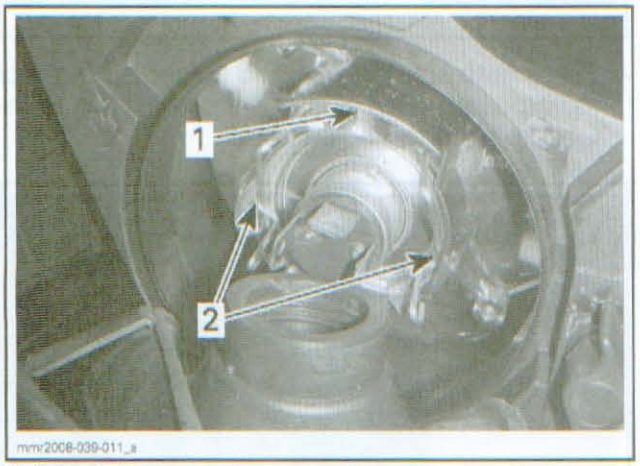

1. *Wide bulb tab*
2. *bulb holder locked*

3. Install rubber boot. Ensure cover is properly inserted in groove provided in the headlight assembly, and around the base of the bulb.

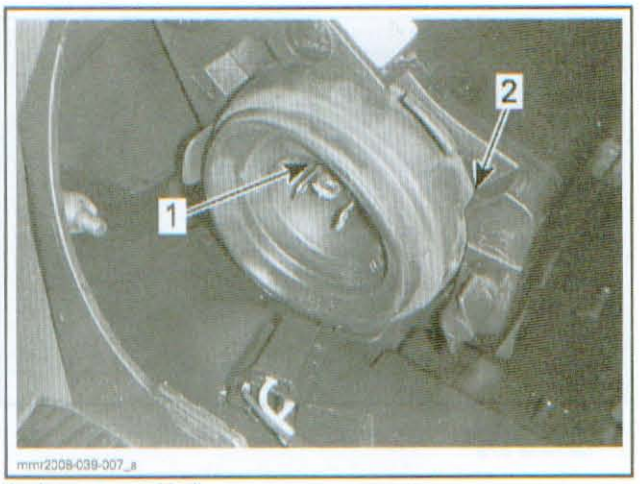

1. *Insert around bulb*
2. *Insert in groove provided*

4. Install light connector.
5. Always test light operation after bulb replacement.
6. Install gauge, see procedure in this section.

Headlight Input Voltage Test

If headlight(s) does not function, proceed as follows.

1. Remove multifunction gauge, see procedure in this section.
2. Disconnect headlight connector(s).
3. Apply electrical power to the headlights for testing. Refer to *LIGHTING AND ACCESSORIES SYSTEM TESTING* in this section for proper procedure.
4. Read voltage at headlight connector as follows.

SWITCH POSITION	WIRE COLOR (HEADLIGHT CONNECTOR)		VOLTAGE
LO beam	GY/VI	BK	Battery voltage (Vdc)
HI beam	GY	BK	

www.midwestmanuals.com

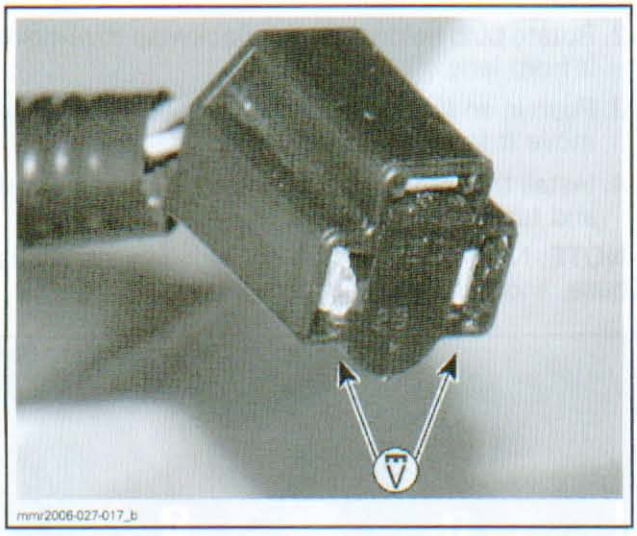

If voltage is inadequate, carry out the following to find the source of the problem:

- Check applicable fuse. Refer to *FUSES* in this section.
- Test relay R1 (500SS/600/800R).
- Test headlights dimmer switch from the HG connector under multifunction gauge, refer to *WIRING DIAGRAM* for circuit details.
- Test wiring harness and connectors.
- Test voltage regulator/rectifier. Refer to *CHARGING SYSTEM*.

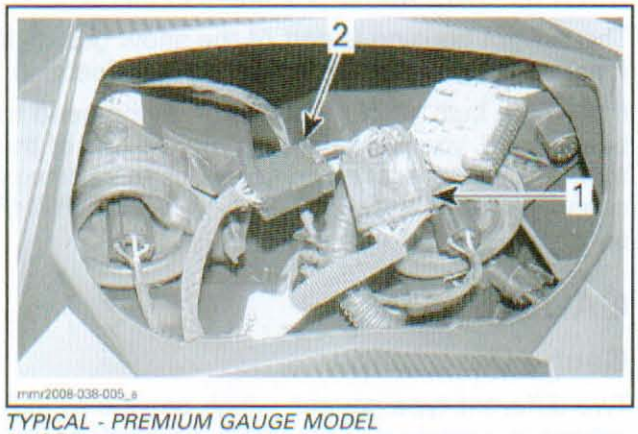

TYPICAL - PREMIUM GAUGE MODEL
1. *AC connector*
2. *HG connector*

NOTE: When testing headlights dimmer switch from HG connector, if an open circuit is found through the switch, remove the screws retaining the multifunction switch, disconnect the LB connector and test for continuity of switch and wiring separately. Dimmer switch is replaced with multifunction switch assembly.

Headlight Beam Aiming

Beam aiming is correct when center of high beam is 25 mm (1 in) below the headlight horizontal center line, scribed on a test surface, 381 cm (12 ft 6 in) away.

1. Place the vehicle on a flat surface perpendicular to test surface (wall or screen) and 381 cm (12 ft 6 in) away from it.
2. Ask rider to sit rider on, or apply equivalent weight on the vehicle.
3. Select **high** beam.
4. Measure headlight center distance from ground. Scribe a line at this height on test surface (wall or screen). Light beam center should be 25 mm (1 in) below scribed line.

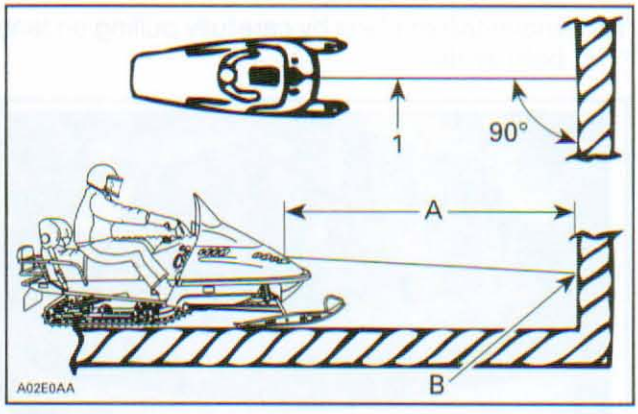

TYPICAL
1. *Headlight center line*

A. 381 cm (12 ft 6 in)
B. 25 mm (1 in) below center line

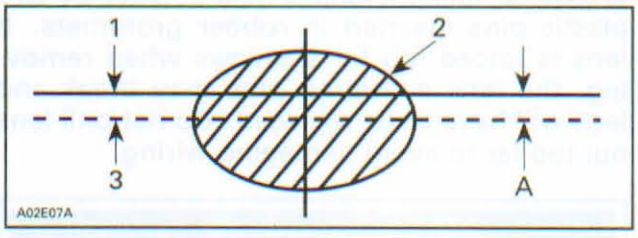

1. *Headlight horizontal*
2. *Light beam (high beam) (projected on the wall)*
3. *Light beam center*

A. 25 mm (1 in)

Beam Aiming Adjustment

1. Remove multifunction gauge.
2. Turn knob on light assembly to adjust beam height.

www.midwestmanuals.com

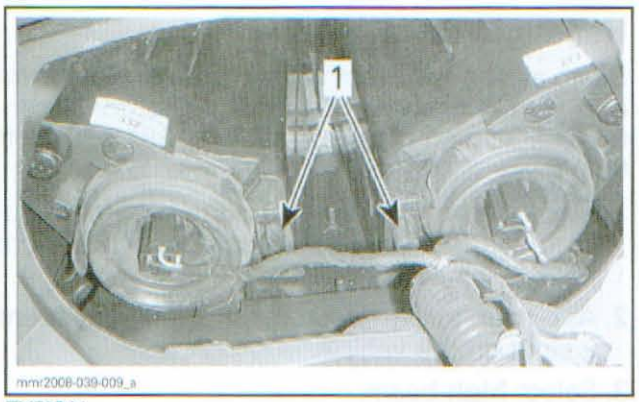

TYPICAL
1. Beam height adjustment knobs

TAILLIGHT

Taillight Bulb Replacement

1. Remove taillight lens by carefully pulling on lens at both ends.

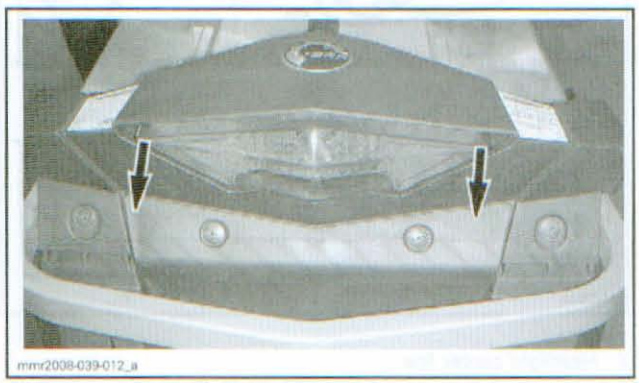

CAREFULLY PULL OUT AT CORNERS

NOTICE Taillight lens is held in place by two plastic pins inserted in rubber grommets. If lens is forced too far sideways when removing, the lens mounting pins may break and lens will have to be replaced. Do not pull lens out too far to avoid damaging wiring.

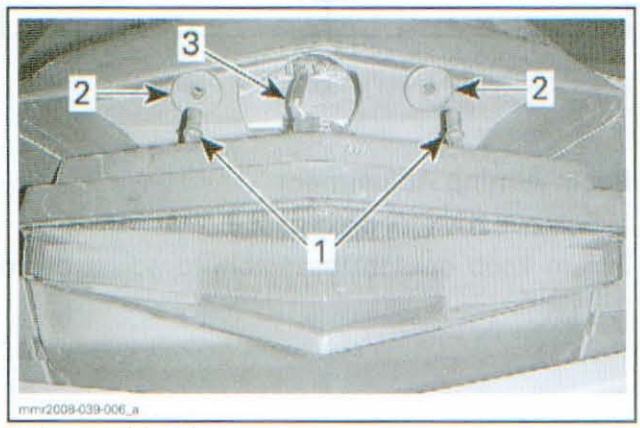

1. Lens retaining pins
2. Retaining grommets
3. Light wire harness

2. Rotate bulb holder counterclockwise to remove it from lens.
3. Push in and rotate bulb counterclockwise to remove it from its socket.
4. Install the new bulb by pushing it in the socket and turning it clockwise.

NOTE: Note position of bulb locking pins on its base, and bulb holder alignment key to lens.

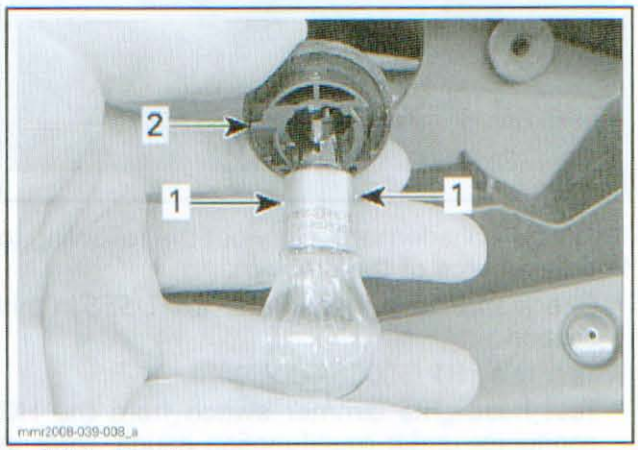

1. Bulb locking pins
2. Bulb holder alignment key

Taillight Assembly Replacement

If the taillight lens is broken, see the *TAILLIGHT BULB REPLACEMENT* procedure in this section.

The taillight housing is part of the snow guard. If it needs to be replaced, refer to *FRAME* section.

If the light bulb holder (socket) or wiring need to be replaced, you will have to lift up the rear of the fuel tank to access and disconnect the harness connector, refer to *FUEL TANK AND FUEL PUMP* section.

GAUGE

Gauge Description

Two different type gauges which provide all indications in a single unit are used. An **analog/digital gauge (standard gauge)** and a **multifunction analog/digital gauge (premium gauge)**.

The premium gauge provides more functions and display features.

Both units can be set to indicate in metric or imperial units.

www.midwestmanuals.com

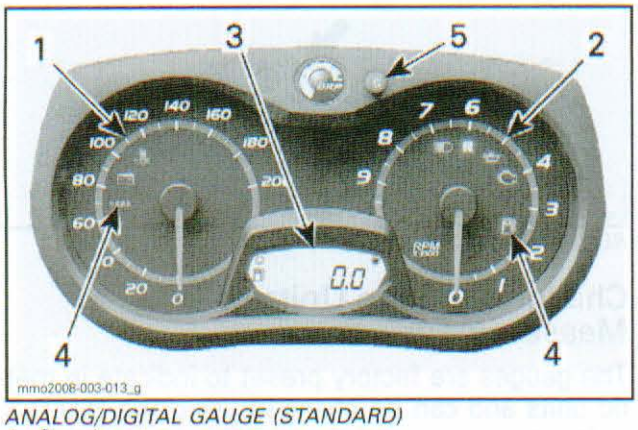

ANALOG/DIGITAL GAUGE (STANDARD)
1. *Speedometer*
2. *Tachometer (RPM)*
3. *Gauge Digital Display*
4. *Gauge Pilot Lamps*
5. *Gauge SET "S" button*

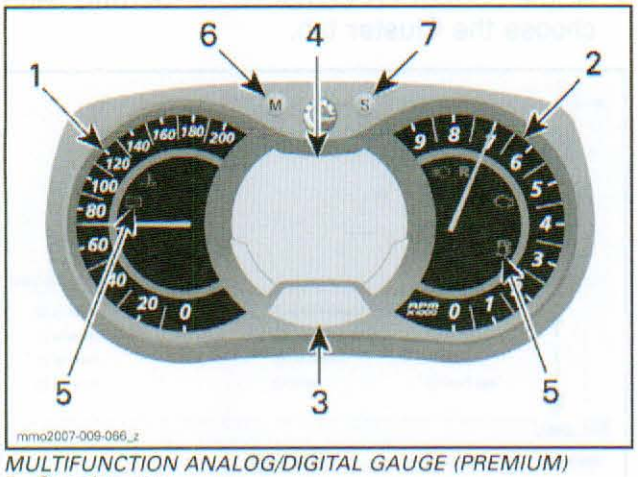

MULTIFUNCTION ANALOG/DIGITAL GAUGE (PREMIUM)
1. *Speedometer*
2. *Tachometer (RPM)*
3. *Gauge Digital Display*
4. *Gauge Multifunction Digital Display*
5. *Gauge Pilot Lamps*
6. *Gauge MODE "M" button*
7. *Gauge SET "S" button*

The premium gauge is also used to control 9 temperature settings for the heated hand grips and the heated throttle lever.

Mode and Set Buttons

Analog/Digital Gauge

The standard gauge is equipped with a **SET** button only.

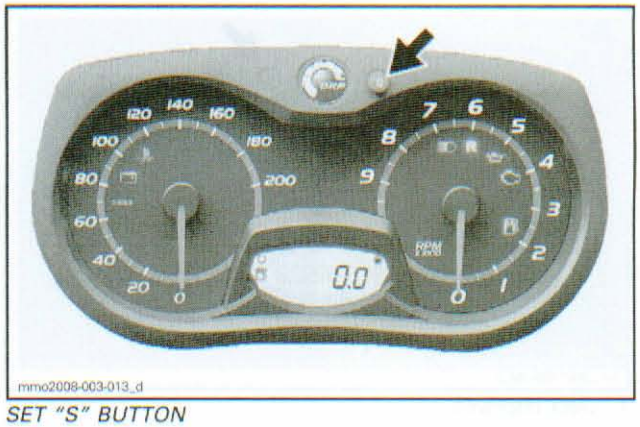

SET "S" BUTTON

Multifunction Analog/Digital Gauge (Premium)

Premium gauge is equipped with **MODE** and **SET** buttons at the top of the indicator.

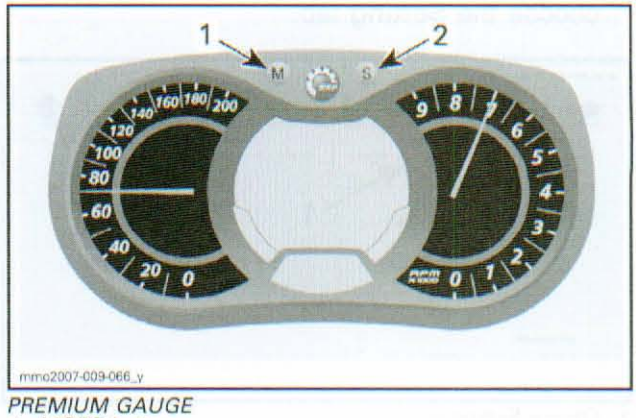

PREMIUM GAUGE
1. *MODE button*
2. *SET button*

These buttons allow you to toggle through the different functions and settings of the indicator.

The vehicles that are factory equipped with the premium gauge also come with a remote **M/S** button on the LH multifunction switch. It can be used instead of the buttons on the gauge simply by pressing the "**M**" for **MODE** and "**S**" for **SET**.

Clock Activation (Premium Gauge)

The gauge has an internal clock that can display the time of day in the lower digital display (when selected). This clock requires power from the vehicle battery to maintain the proper time of day.

www.midwestmanuals.com

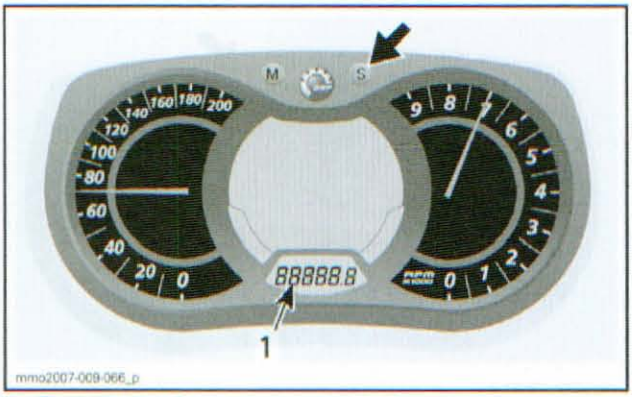

1. *Clock displayed*

Without battery power, this clock resets every time the vehicle is shut down, then restarted. It is then only used as a timer.

1. To activate the clock function in B.U.D.S., choose the **Setting** tab.

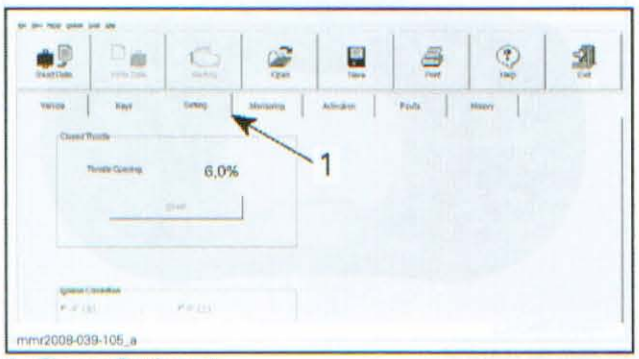

1. *Choose **Setting** tab*

2. At the bottom LH corner of the **Setting** page, choose the **Cluster** tab.

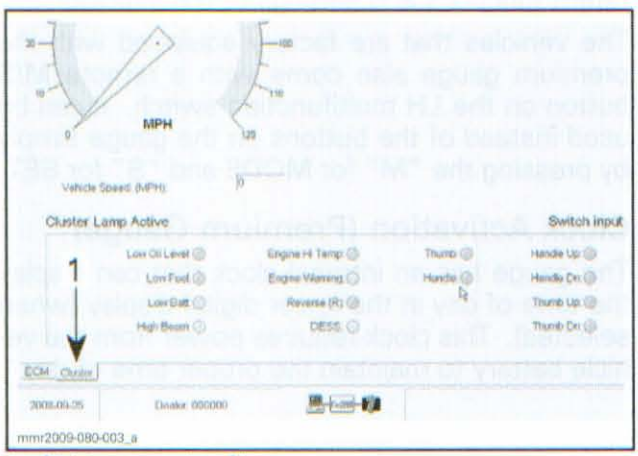

1. *Click here to select **Cluster** page*

3. At the bottom of the **Cluster** page, choose **Installed** in the **Real time clock** field if the vehicle is equipped with a battery. Choose **Not installed** if the vehicle does not have a battery.

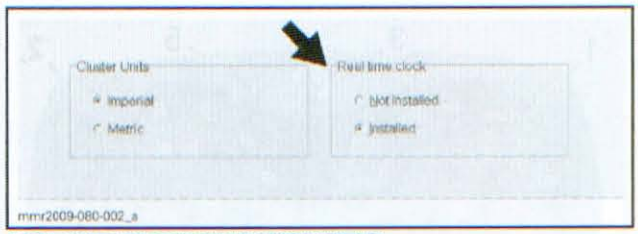

REAL TIME CLOCK SELECTION FIELD

Changing Gauge Units of Measurement

The gauges are factory preset to indicate in metric units and can be changed using the B.U.D.S. software.

1. To change the gauge units of measurement in B.U.D.S., first choose the **Setting** tab.
2. At the bottom LH corner of the **Setting** page, choose the **Cluster** tab.

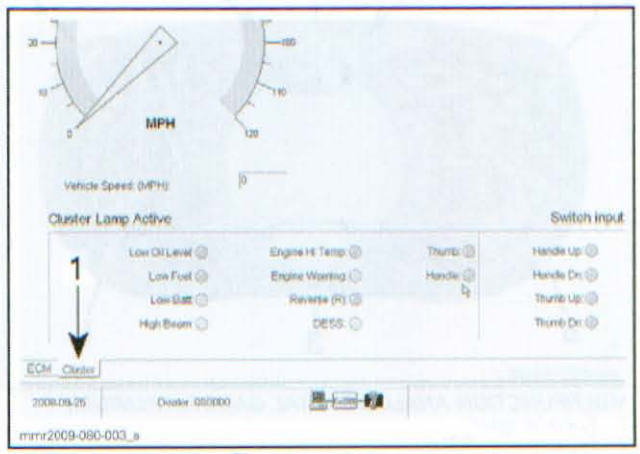

1. *Click here to select **Cluster** page*

3. At the bottom of the **Cluster** page, select **Imperial** or **Metric** in the **Cluster Units** field.

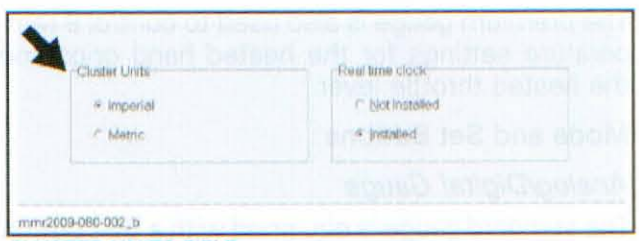

CLUSTER UNITS FIELD

NOTE: Speedometer, odometer and trip meter will have their units (kilometer or miles) changed all together.

Displaying "P" Codes (Premium Gauge Only)

1. To activate **P CODE** mode, push and hold the "M" button for 2 seconds.

www.midwestmanuals.com

2. As you hold the "M" button, quickly turn ON and OFF the high beams a few times. The gauge should enter **P CODE** mode.
3. While in **P CODE** mode, use the "M" or "S" button to scroll over available failure codes.
4. Push and hold the "M" button to exit **P CODE** mode.

A **NO ACTIVE P CODE** message is displayed if there are no **P CODES** in memory.

Gauge Self Test

On **ECM wake-up**, the gauge will perform a self-test. All indications will come ON. You will have a few seconds to ensure the indications (**LEDs** and **LCDs**) are functioning correctly.

Gauge Test With B.U.D.S.

1. In B.U.D.S., choose the **Activation** tab.

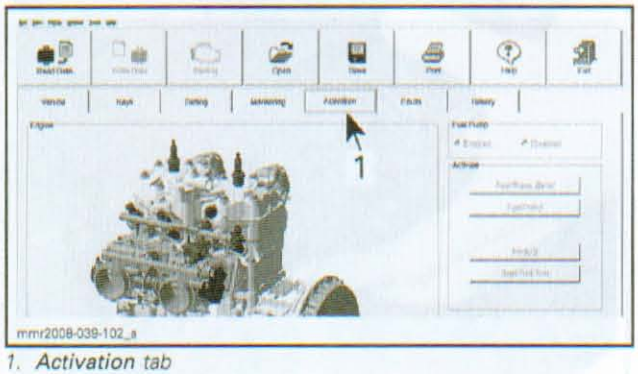

1. *Activation tab*

2. On the bottom of the activation page on the RH side, click the arrow next to the window that says **Page 1** and select **Page 2**.

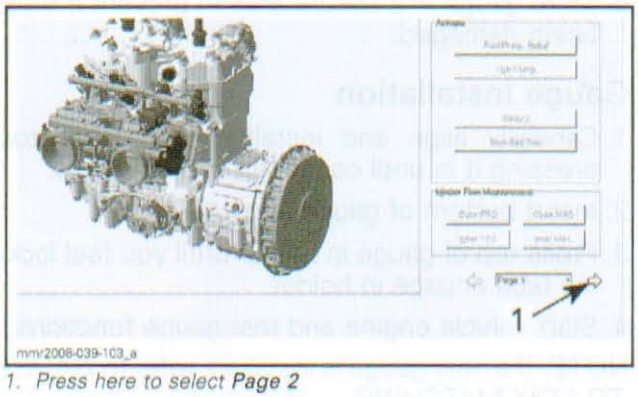

1. *Press here to select Page 2*

3. On **Page 2**, select the **WOW Test** button. All indications will come ON and stay ON allowing the time required to verify each indication.

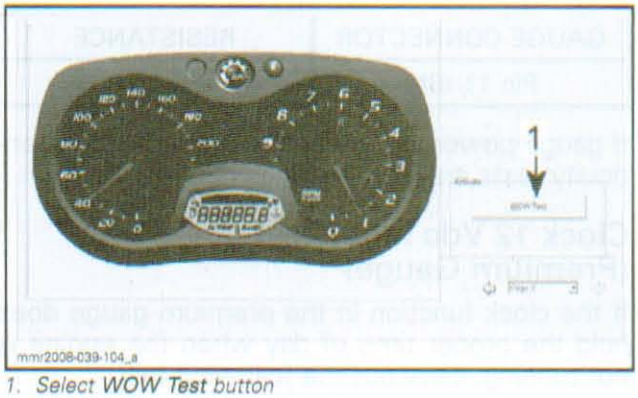

1. *Select WOW Test button*

NOTE: The **WOW Test** only test the gauges **LEDs** and **LCDs**. It does not test the actual circuit functions related to each indication.

Gauge Power Input Test (Main 12 Vdc)

If the gauge does not come on when the engine is started, carry out the following test.

1. Remove multifunction gauge.
2. Disconnect the gauge connector.
3. Set multimeter to Vdc.
4. Start engine.
5. Measure voltage as per following table.

MODEL	GAUGE CONNECTOR	VOLTAGE
500SS/600/800R	Pin 8 (RD/YL)	Over 12 Vdc
E-TEC	Pin 8 (RD/OR)	Approximately 14.75 Vdc

6. If gauge main power input test was as specified, carry out the gauge *GROUND CIRCUIT CONTINUITY TEST*.
7. If no voltage was read, test wiring continuity. Refer to *WIRING DIAGRAM* for details.

NOTE: On 500SS/600/800R models, the gauge receives power from the 20 A accessories fuse FC. This fuse also provides power to the tail light, brake light and heaters.

NOTE: On 600 HO E-TEC models, the gauge receives its main power input directly from the primary 12 Vdc bus. There are no fuses or relays to test, only wiring and connectors.

Gauge Ground Circuit Continuity Test

1. Set multimeter to Ω selection.
2. Measure for continuity of gauge ground wire as per following table.

www.midwestmanuals.com

GAUGE CONNECTOR	RESISTANCE
Pin 11 (BK)	Close to 0 Ω

If gauge power input test and ground circuit continuity tests are good, replace gauge.

Clock 12 Vdc Input Test (Premium Gauge)

If the clock function in the premium gauge does hold the proper time of day when the engine is not running, carry out the following test.

NOTE: The clock receives 12 Vdc from the battery through the 5 A START/RER fuse in order to maintain correct time when the engine is not running.

1. Remove multifunction gauge.
2. Disconnect the gauge connector.
3. Set multimeter to Vdc.
4. Measure voltage as per following table.

MODEL	GAUGE CONNECTOR	VOLTAGE
All	Pin 9 (RD/GR)	Battery voltage

NOTE: If the START/RER fuse was open, the electrical start and RER functions would not be operational.

5. If there is no voltage read, test input wire continuity. Refer to *WIRING DIAGRAM* for circuit details.

Gauge Removal

1. Insert a small screwdriver in one of the rectangular slots at top of gauge.
2. As you gently press down on the screwdriver to release multifunction gauge locking tab, pull out and hold gauge in position.
3. Insert screwdriver in second hole and press to release other tab.

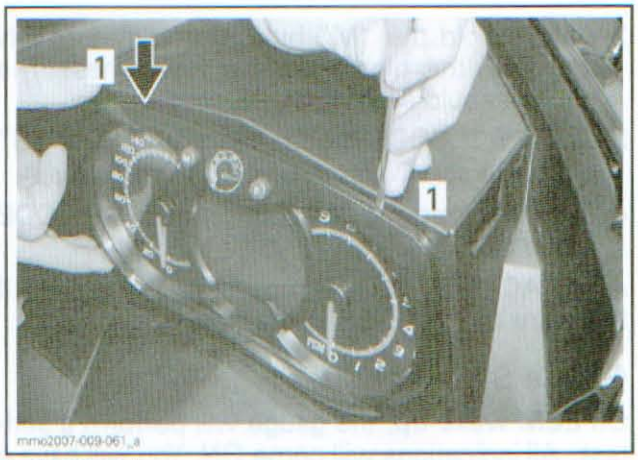

mmo2007-009-061_a

1. *Locking tabs*

4. Gently pull multifunction gauge from gauge support.

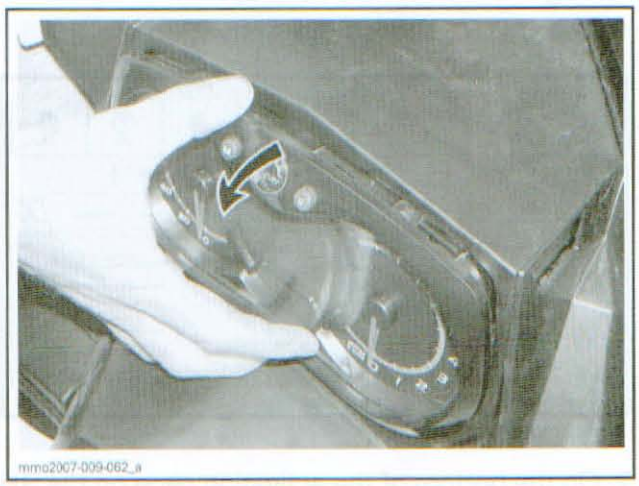
mmo2007-009-062_a

5. Press on connector locking tab and pull connector off gauge.
6. Store gauge in a secure area to prevent it from being damaged.

Gauge Installation

1. Carefully align and install gauge connector, pressing it in until connector lock engages.
2. Insert bottom of gauge in gauge holder.
3. Press top of gauge in holder until you feel locking tabs engage in holder.
4. Start vehicle engine and test gauge functions.

NOTE: If a new gauge is installed, refer to *GAUGE TO ECM MATCHING*.

Gauge to ECM Matching

NOTE: If the gauge is replaced, the V.I.N. (Vehicle Identification Number) and the vehicle model number must be entered in the gauge memory so they match those stored in the vehicle ECM.

www.midwestmanuals.com

If the numbers stored in the gauge do not match those stored in the ECM, the engine will start but the new gauge will stop operating within 10 seconds after the engine is started. The indicator needles will function normally but the LCD display will remain blank and the DESS LED will be turned ON. This is a gauge antitheft feature.

1. To write the V.I.N. number and model number into the gauge, connect to the latest B.U.D.S. software applicable to the 600 HO E-TEC from BOSSWeb. Refer to the *COMMUNICATION TOOLS AND B.U.D.S. SOFTWARE* section.
2. Follow the instructions in the referenced section and in the software.
3. Once connected and activated, select the **Read Data** button. You will see a message similar to the following illustration.

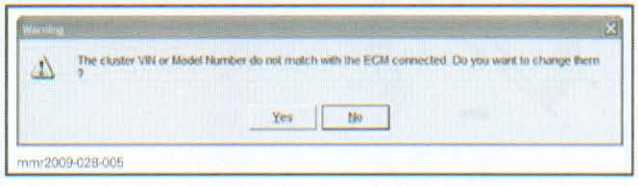

4. Select **Yes** in the displayed window.

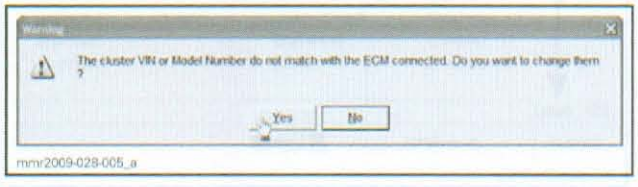

The following window illustrates that the V.I.N. number or model number in the ECM and cluster are not the same.

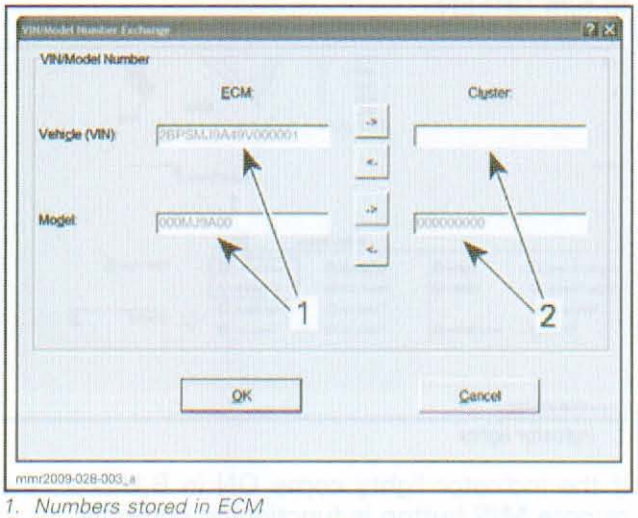

1. *Numbers stored in ECM*
2. *No numbers stored in new cluster*

5. Select each of the arrows indicated in the following illustration to copy the V.I.N. and model numbers from the ECM to the cluster.

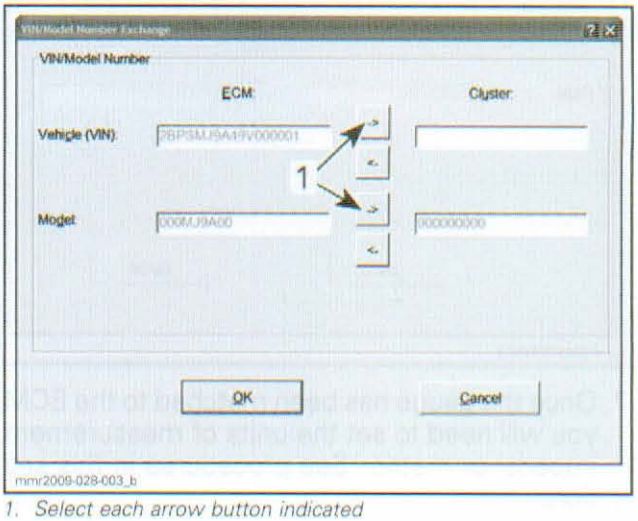

1. *Select each arrow button indicated*

Note how the numbers in the **Cluster** field now matches those in the **ECM** field.

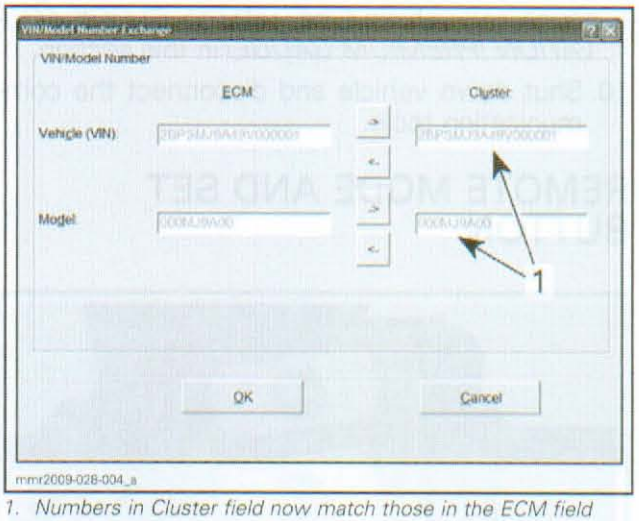

1. *Numbers in Cluster field now match those in the ECM field*

6. Select **OK** to continue.

www.midwestmanuals.com

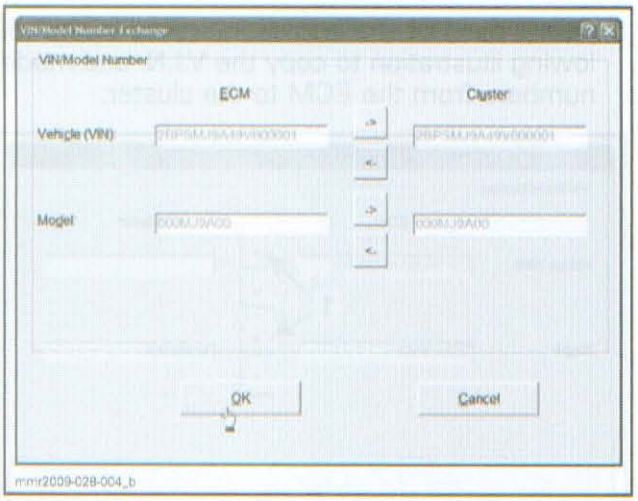

7. Once the gauge has been matched to the ECM, you will need to set the units of measurement, imperial or metric. See procedures in this section.
8. Ensure the gauge functions properly and that all settings and indications are within parameters.
9. Be sure to set the clock function according to gauge and vehicle type, refer to *CLOCK ACTIVATION (PREMIUM GAUGE)* in this section.
10. Shut down vehicle and disconnect the communication tools.

REMOTE MODE AND SET BUTTON

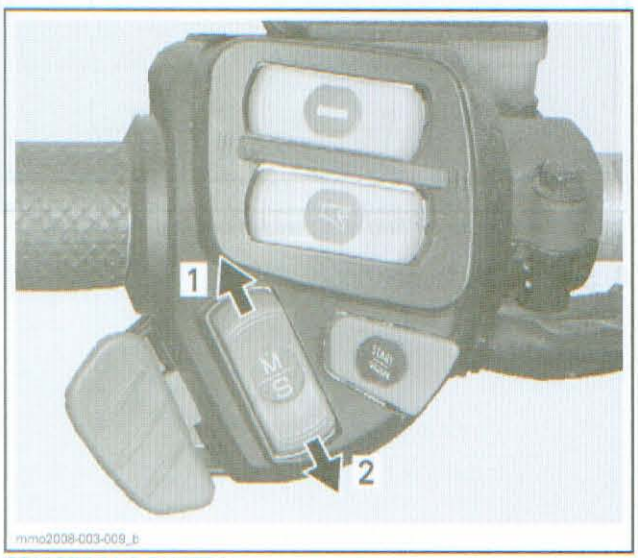

REMOTE M/S BUTTON
1. *MODE selection "M"*
2. *SET selection "S"*

Remote M/S Button Testing with B.U.D.S.

Using the B.U.D.S. software, select the **Monitoring** tab.

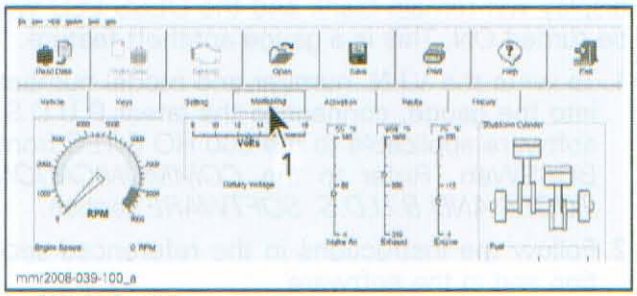

1. *Monitoring tab*

On the lower LH side of the **Monitoring** page, choose the **Cluster** tab.

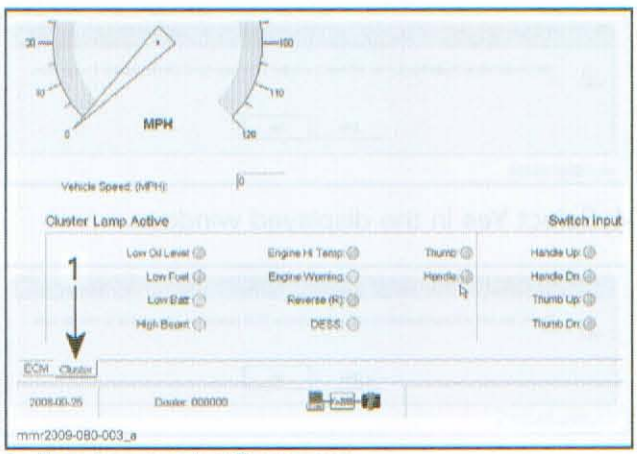

1. *Press here to select **Cluster** page*

Alternately press on the "**M**" and "**S**" and look for applicable indicator light in the **Switch inputs** field to turn GREEN.

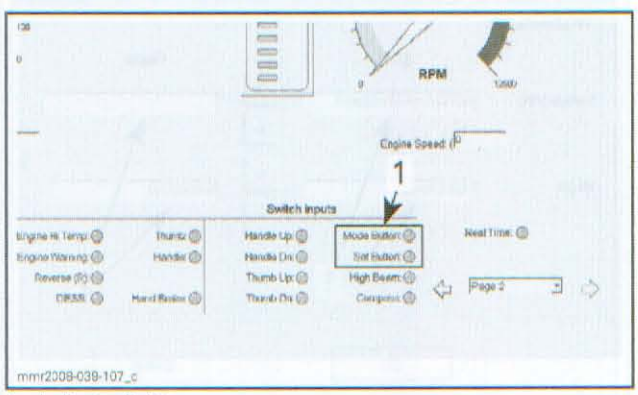

1. *Indicator lights*

If the indicator lights come ON in B.U.D.S., the remote **M/S** button is functioning correctly.

www.midwestmanuals.com

If the indicator lights do not come ON, carry out the following *REMOTE M/S BUTTON TESTING* procedure.

Remote M/S Button Continuity Test

1. If using the M/S button does not affect the indication, try using the buttons on the gauge. If they function, the remote M/S button circuit may be open.
2. Remove the gauge.
3. Disconnect the HG and the AC connectors.

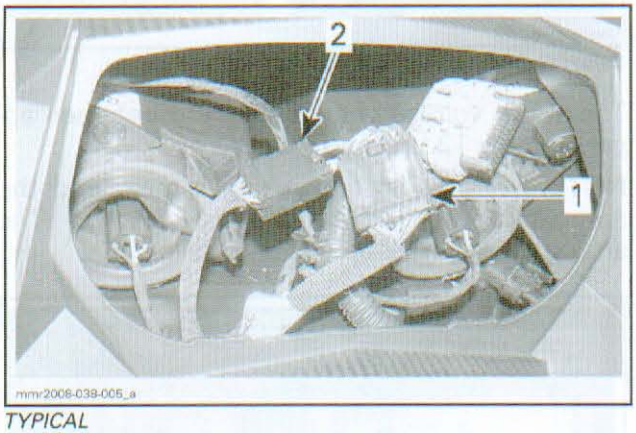

TYPICAL
1. *AC connector*
2. *HG connector*

4. Using a multimeter set to Ω, carry out the following continuity test.

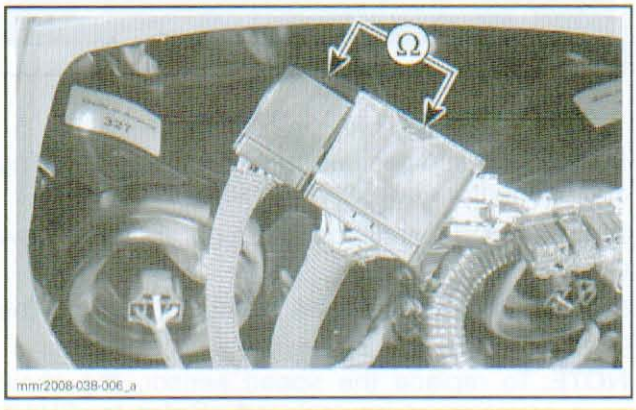

800R REMOTE M/S BUTTON TESTING			
SWITCH SELECTION	AC CONNECTOR WIRE	HG CONNECTOR WIRE	RESISTANCE
Centered	Pin 5 (YL/BR)	Pin 1 (BK)	Infinite Ω
	Pin 6 (YL/GN)		
"M"	Pin 5 (YL/BR)	Pin 1 (BK)	Close to 0 Ω
"S"	Pin 6 (YL/GN)		

600 HO E-TEC REMOTE M/S BUTTON TESTING			
SWITCH SELECTION	AC CONNECTOR WIRE	HG CONNECTOR WIRE	RESISTANCE
Centered	Pin 6 (YL/BR)	Pin 1 (BK/BU)	Infinite Ω
	Pin 7 (YL/GN)		
"M"	Pin 6 (YL/BR)	Pin 1 (BK/BU)	Close to 0 Ω
"S"	Pin 7 (YL/GN)		

If you do obtain the values as specified, repair or replace switch, wiring and connections.

SPEED SENSOR

The speed sensor is mounted in the chain case cover. It is sealed in the cover and is replaced with the cover.

Speed Sensor Static Test

1. Locate speed sensor connector.

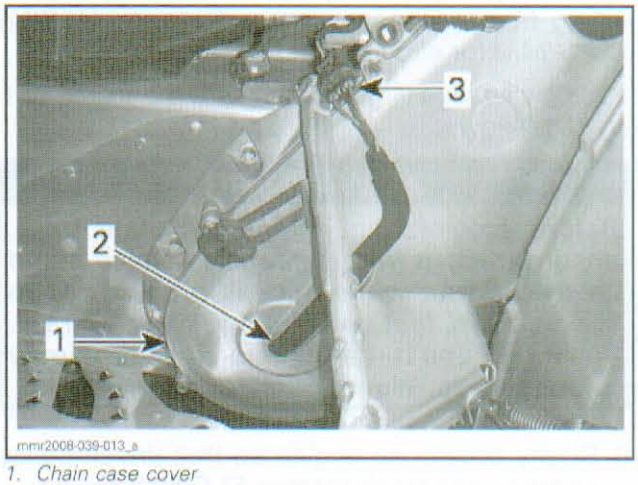

1. *Chain case cover*
2. *Speed sensor*
3. *Speed sensor connector*

2. Lift and support back end of vehicle so that the track is completely off the ground.
3. Start engine and let it run at idle speed so that the driven pulley does not engage and track does not rotate.
4. To perform verifications, use the FLUKE 115 MULTIMETER (P/N 529 035 868) with Fluke TP88 rigid back probe pins or equivalent.
5. With multimeter set to Vdc, back-probe connector and read sensor supply voltage as follows.

www.midwestmanuals.com

SPEED SENSOR CONNECTOR (SENSOR SIDE)		VOLTAGE
RD	BK	Approximately 12 Vdc

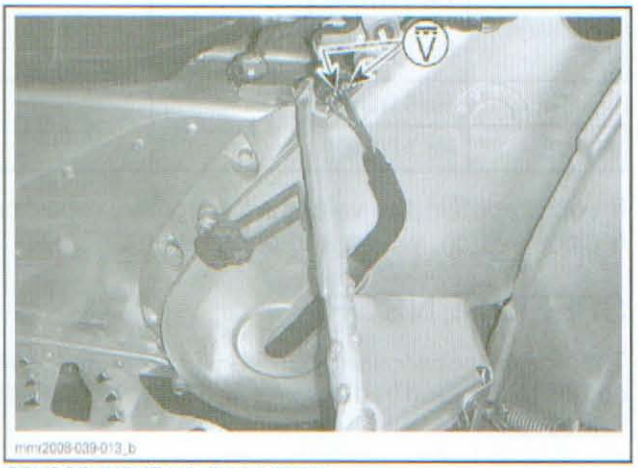

SENSOR INPUT VOLTAGE TEST

If you do not have proper supply voltage, shut down engine and carry out a continuity test of wiring from sensor to gauge. Refer to *WIRING DIAGRAM* for circuit detail.

If supply voltage is good, measure the signal voltage as follows.

⚠ WARNING

Before accelerating engine to rotate track, ensure track is free of particles which could be thrown out while track is rotating. Keep hands, tools, feet and clothing clear of track. Ensure no one is standing in close proximity to the vehicle. Never rotate at high speed.

6. Slowly accelerate engine so that driven pulley engages and track rotates SLOWLY.
7. Back-probe connector between GREEN and BLACK wires, read voltage.

ROTATE TRACK	SPEED SENSOR CONNECTOR (SENSOR SIDE)		VOLTAGE
	GN	BK	Alternate 12 Vdc and 0 Vdc

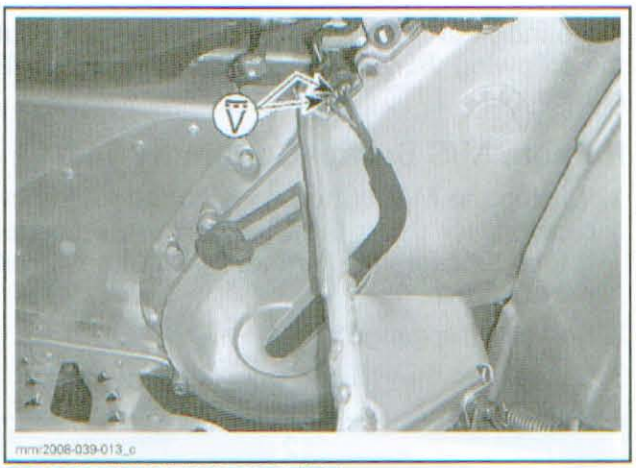

SENSOR SIGNAL VOLTAGE TEST

The signal voltage should alternate between approximately 12 Vdc and 0 Vdc.

NOTE: Since a pulsating voltage is measured, the numeric display will continuously change. The analog display may be easier to follow.

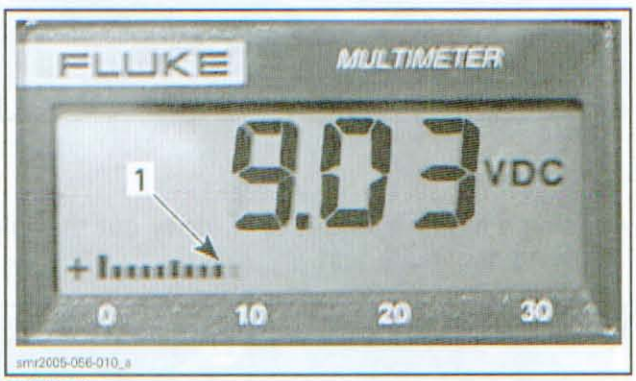

TYPICAL
1. Analog display

If voltage is as specified, repair or replace wiring and connectors between sensor and gauge.

If wiring and connectors are good, try a new gauge.

If signal voltage is not as specified, replace the speed sensor.

NOTE: To replace the speed sensor, the chain case cover must be replaced. Refer to *CHAIN CASE* section.

FUEL LEVEL SENSOR

A float type fuel level sensor equipped with an in-line fuse (0.25 A) is used to provide a signal to the gauge for indication. Refer to *FUEL TANK AND FUEL PUMP* for sensor testing.

www.midwestmanuals.com

HEATED THROTTLE LEVER

System Description

There are two types of throttle lever heating systems used on the REV-XP platform.

The type of system used is determined by the gauge package installed at the factory, standard gauge or premium gauge.

Models with Standard Gauge

On vehicles equipped with a "Standard" gauge, the throttle lever heater is controlled by a toggle switch on the LH multifunction switch assembly.

The switch allows you to select **High**, center **Off**, and **Low** heat settings. The switch button will remain in the selected position until another selection is made.

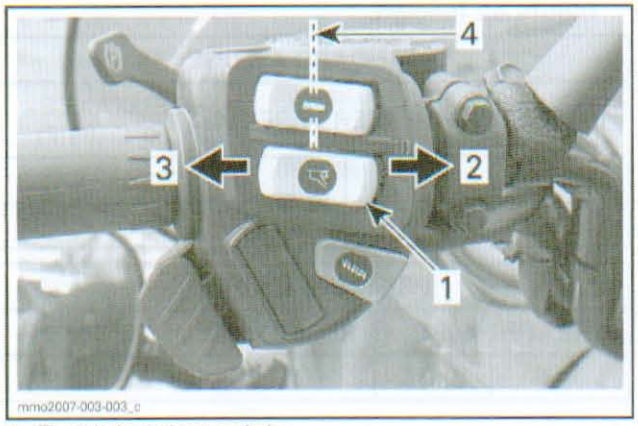

1. Throttle lever heat switch
2. High
3. Low
4. Heat OFF (center position)

Models with Premium Gauge

On vehicles factory equipped with a "Premium" gauge, the throttle lever heat is controlled through the gauge.

The heated throttle lever will not be powered until the engine is at or above 2000 RPM.

A three position switch on the LH multifunction switch assembly allows selection of 9 heat levels, which are displayed in the indicator.

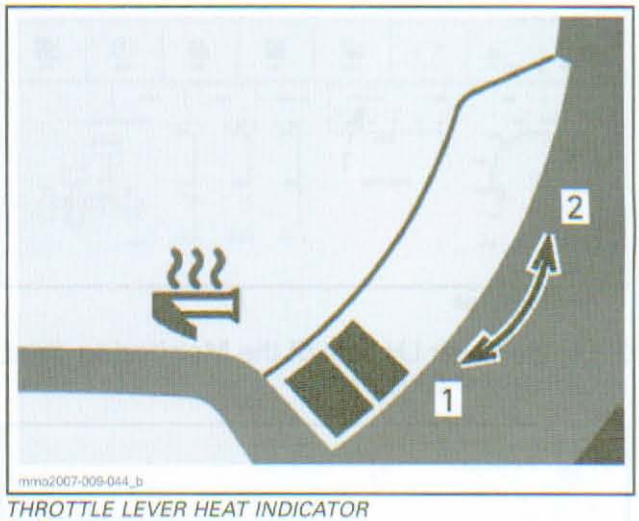

THROTTLE LEVER HEAT INDICATOR
1. Decrease heat
2. Increase heat

The switch selection sends a signal to the premium gauge to increase or decrease heat.

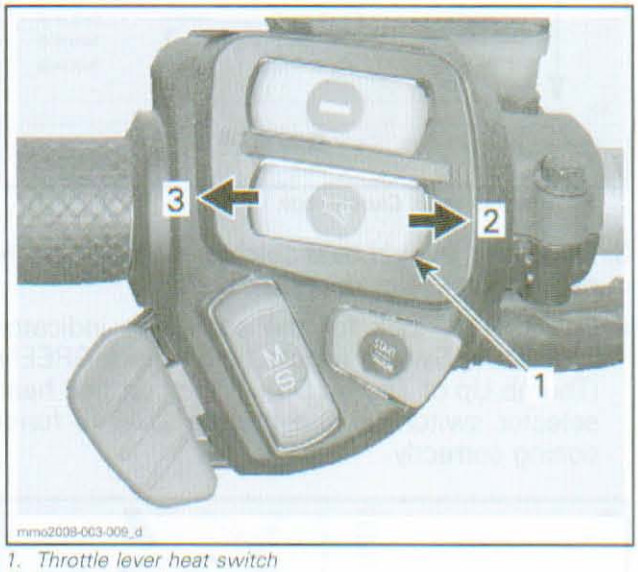

1. Throttle lever heat switch
2. Increase heat
3. Decrease heat

The gauge then applies the appropriate amount of current to the heater according to the selection.

To turn OFF the heaters, select heat down until there is no more indication on the bar graph.

When released, the switch springs back to the center neutral position.

Heat Selector Switch Testing with B.U.D.S. (Premium Gauge)

1. Using the B.U.D.S. software, select the **Monitoring** tab.

www.midwestmanuals.com

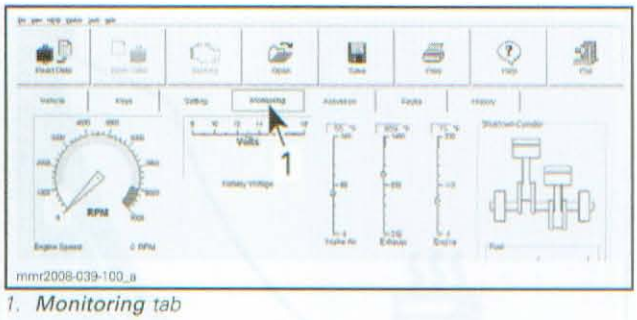

1. *Monitoring tab*

2. On the lower LH side of the **Monitoring** page, choose the **Cluster** tab.

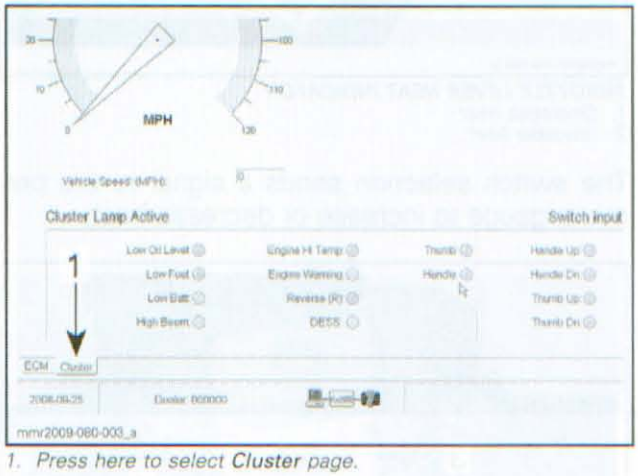

1. *Press here to select **Cluster** page.*

3. Press on the lever heat selector switch to alternately increase or decrease heat.

4. In B.U.D.S., look for the applicable indicator light in the **Switch inputs** field to turn GREEN (Thumb Up or Thumb Dn). If they do, the heat selector switch for the throttle lever is functioning correctly.

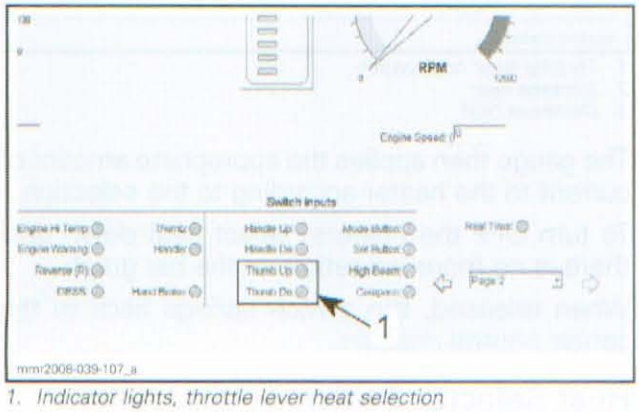

1. *Indicator lights, throttle lever heat selection*

5. If the selector switch and the heater test good, replace the gauge.

Lever Heating Element Testing

1. Disconnect the RH steering connectors located under the steering cover.

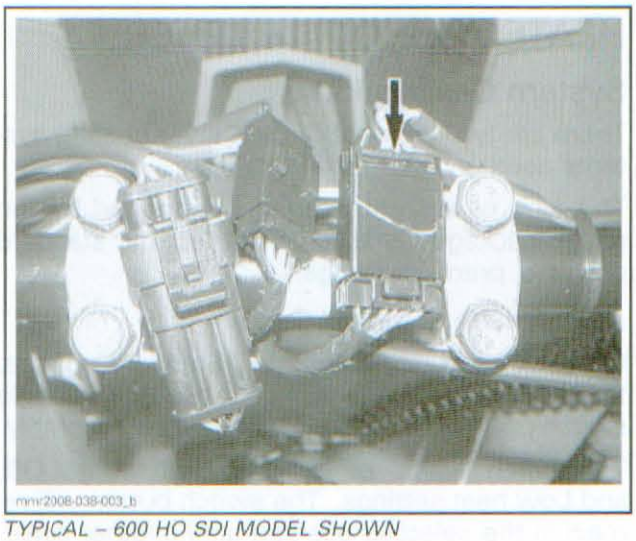

TYPICAL – 600 HO SDI MODEL SHOWN

2. Carry out a resistance check of the heating elements as follows.

STANDARD GAUGE			
INTENSITY	HEATER WIRE		RESISTANCE @ 20°C (68°F)
LOW	BR/YL	YL/BK	5.7 to 18.5 Ω
HIGH	BR		1.7 to 4.2 Ω

PREMIUM GAUGE		
HEATER WIRE		RESISTANCE @ 20°C (68°F)
BR	BK/YL	1.7 to 4.2 Ω

If readings are out of specifications, replace throttle lever.

If heating element readings are within specifications, carry out a switch continuity test. Refer to *WIRING DIAGRAM* for wiring and connector details.

3. Reconnect connectors.

HEATED HANDLEBAR GRIPS

System Description

There are two types of grip heating systems used on the REV-XP platform.

The type of system used is determined by the gauge package installed at the factory, standard gauge or premium gauge.

Models with Standard Gauge

On vehicles equipped with a "Standard" gauge, the grip heater is controlled by a toggle switch on the LH multifunction switch assembly.

www.midwestmanuals.com

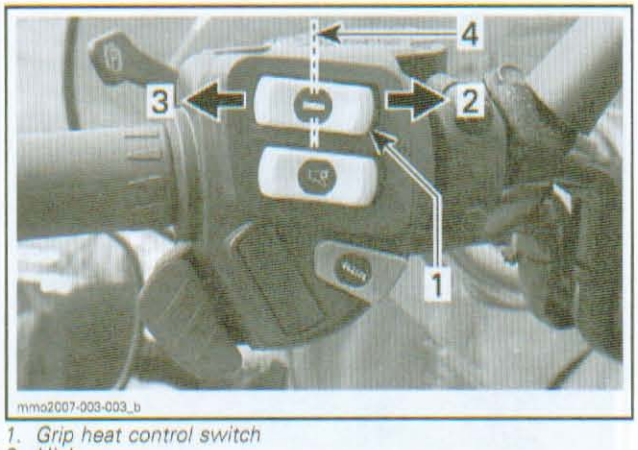

1. *Grip heat control switch*
2. *High*
3. *Low*
4. *Heat OFF (center position)*

The switch allows you to select **High**, center **Off**, and **Low** heat settings. The switch button will remain in the selected position until another selection is made.

Models with Premium Gauge

On vehicles factory equipped with a "Premium" gauge, the grip heat is controlled through the gauge.

The heated hand grips will not be powered until the engine is at or above 2000 RPM.

A three position switch on the LH multifunction switch assembly allows selection of 9 heat levels, which are displayed in the indicator.

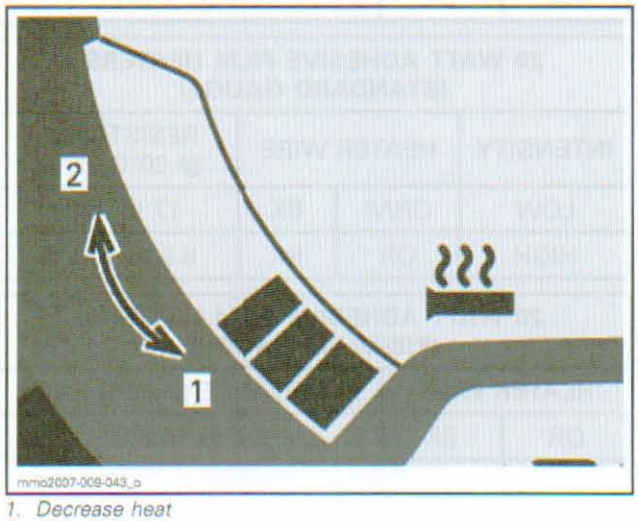

1. *Decrease heat*
2. *Increase heat*

The switch selection sends a signal to the premium gauge to increase or decrease heat.

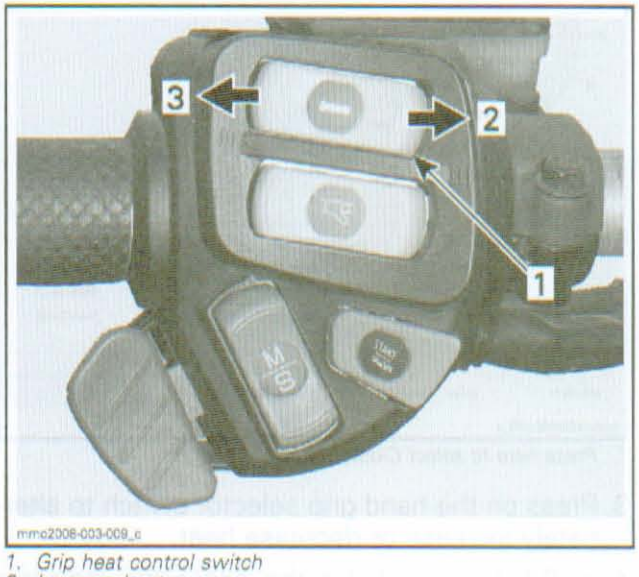

1. *Grip heat control switch*
2. *Increase heat*
3. *Decrease heat*

The gauge then applies the appropriate amount of current to the heater according to the selection.

To turn OFF the heaters, select heat down until there is no more indication on the bar graph.

When released, the switch springs back to the center neutral position.

Heat Selector Switch Testing with B.U.D.S. (Premium Gauge)

1. Using the B.U.D.S. software, select the **Monitoring** tab.

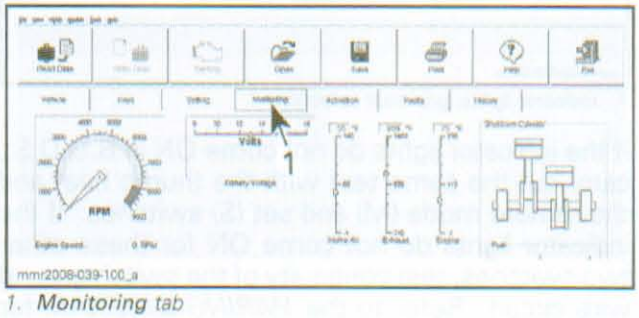

1. *Monitoring tab*

2. On the lower LH side of the **Monitoring** page, choose the **Cluster** tab.

www.midwestmanuals.com

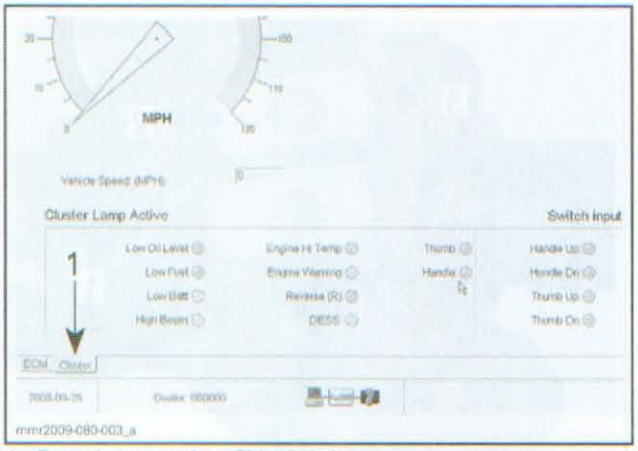

*1. Press here to select **Cluster** page*

3. Press on the hand grip selector switch to alternately increase or decrease heat.
4. In B.U.D.S., look for the applicable indicator light in the **Switch inputs** box to turn GREEN (Handle Up or Handle Dn). If they do, the heat selector switch for the hand grips is functioning correctly.

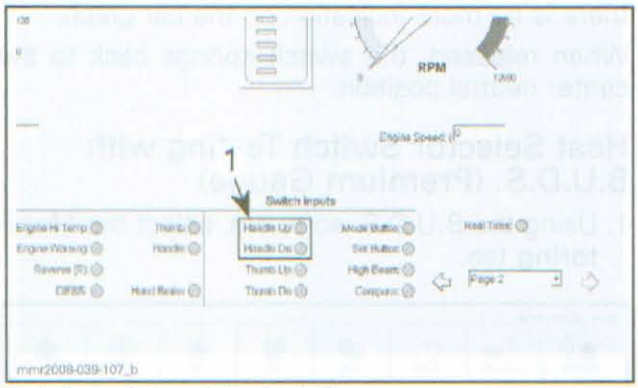

1. Indicator lights, grip heat selection

If the indicator lights do not come ON in B.U.D.S., carry out the same test with the thumb heat and the remote mode (M) and set (S) switches. If the indicator lights do not come ON for these other two switches, test continuity of the switch ground wire circuit. Refer to the *WIRING DIAGRAM* for circuit details.

If the selector switch, wiring and the heaters test good, replace the gauge.

Grip Heating Element Testing

If you cannot feel the temperature increase of a hand grip heating element, carry out the following steps.

1. Disconnect the two steering connectors located under the steering cover.

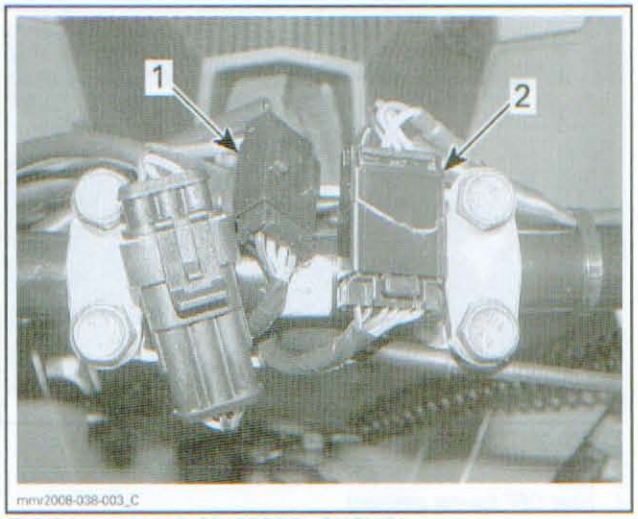

TYPICAL – 600 HO SDI MODEL SHOWN
1. LH steering connector
2. RH steering connector

2. Test heating elements on either side as per following specifications.

INTEGRATED HEATERS (STANDARD GAUGE)			
INTENSITY	HEATER WIRE		RESISTANCE @ 20°C (68°F)
LOW	OR/VI	BK	15.5 to 19. Ω
HIGH	OR	BK	7.74 to 9.5 Ω

INTEGRATED HEATERS (PREMIUM GAUGE)		
HEATER WIRE		RESISTANCE @ 20°C (68°F)
OR	BK	7.7 to 9.5 Ω

20 WATT ADHESIVE FILM HEATERS (STANDARD GAUGE)			
INTENSITY	HEATER WIRE		RESISTANCE @ 20°C (68°F)
LOW	OR/VI	BK	17 to 21 Ω
HIGH	OR	BK	8.5 to 10.5 Ω

20 WATT ADHESIVE FILM HEATERS (PREMIUM GAUGE)		
HEATER WIRE		RESISTANCE @ 20°C (68°F)
OR	BK	8.5 to 10.5 Ω

www.midwestmanuals.com

32 WATT ALUMINUM HANDLEBAR HEATERS (STANDARD GAUGE)			
INTENSITY	HEATER WIRE		RESISTANCE @ 20°C (68°F)
LOW	OR/VI	BK	10.7 to 13.1 Ω
HIGH	OR	BK	5.3 to 6.6 Ω

32 WATT ALUMINUM HANDLEBAR HEATERS (PREMIUM GAUGE)		
HEATER WIRE		RESISTANCE @ 20°C (68°F)
OR	BK	5.3 to 6.6 Ω

3. If readings are out of specifications, replace applicable handle grip heating element.
4. If heating element readings are within specifications, carry out a switch continuity test. Refer to *WIRING DIAGRAM* for wiring and connector details.
5. Reconnect connectors.

Heater Element Removal

NOTICE Heater wire routing may vary significantly due to different type handlebars and vehicles. Its highly important to take note of exact positioning of grip heaters, locking ties, and wire routing before removing them from the handlebars. Failure to properly route wires may lead to equipment damage or failure.

Models with Integrated Heaters

On models with heaters integrated within the rubber hand grip, refer to the *STEERING SYSTEM* section for removal procedures.



TYPICAL - LH SIDE
1. *Grip with integrated heater element*
2. *Heater wire*

Models with Adhesive Film Heaters (Steel Handlebar)

This model heater is used on vehicles with a painted steel handlebar.

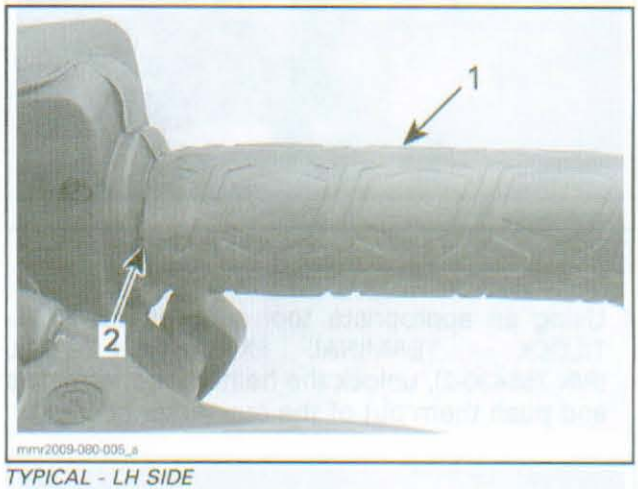

TYPICAL - LH SIDE
1. *Hand grip with adhesive film heater*
2. *Heater wire*

To remove this type heater, follow the instructions in the *MODELS WITH ADHESIVE FILM HEATERS (ALUMINUM HANDLEBARS)* procedure.

Models with Adhesive Film Heaters (Aluminum Handlebars)

1. Remove the following items as applicable, refer to *STEERING SYSTEM* section for details.
   - Steering cover
   - Rubber hand grip
   - Multifunction switch cover.
2. Disconnect the LH or RH steering connectors under the steering cover (as applicable).



TYPICAL - STEERING CONNECTORS

3. Open the cover on the back of the connector housing using a small screwdriver or a suitable tool.

www.midwestmanuals.com

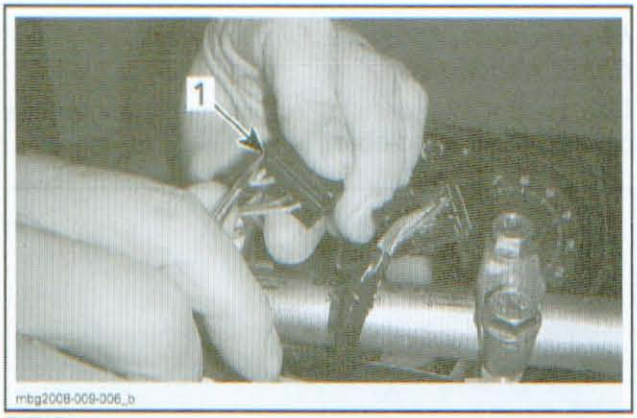

TYPICAL
1. *Connector housing cover locks (one each side)*

4. Using an appropriate tool such as the MULTILOCK - TERMINAL EXTRACTION TOOL (P/N 755430-2), unlock the heater wire terminals and push them out of the connector housing.

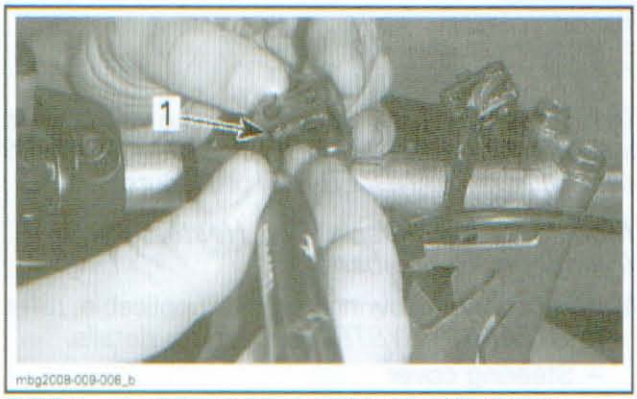

TYPICAL - UNLOCKING CONNECTOR PIN (FRONT SIDE)
1. *Pin removal tool inserted above pin*

NOTE: Terminals are unlocked and pushed out from the front (pin side) of the connector housing.

NOTICE **Be sure to take note of exact positioning of grip heaters, locking ties, and wire routing before removing them from the handlebars.**

5. Cut locking ties securing heater wires to handlebars.
6. Pull wires from harness protective sheath, multifunction switch housing or throttle lever housing.
7. Cut and remove black electrical tape from heater element and remove heater from cork insulator.

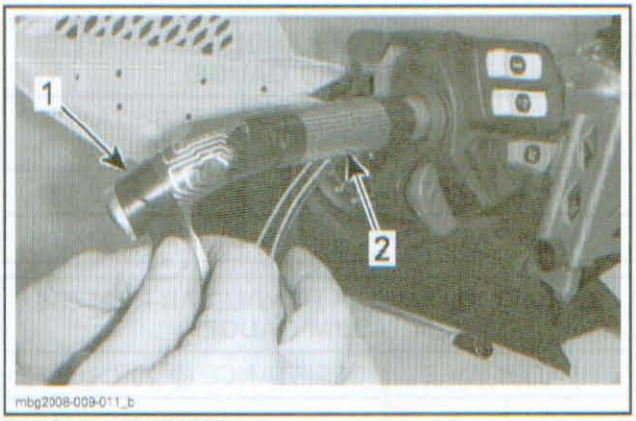

TYPICAL - LH HEATER
1. *Electrical tape (4 places)*
2. *Heater element*

8. If damaged, remove cork insulator from handlebar and clean all adhesive residue from the handlebar.

Heater Element Installation

Models with Integrated Heaters

On models with heaters integrated within the rubber hand grip, refer to the *STEERING SYSTEM* section for installation procedures.

NOTE: When installing the hand grips with integrated heaters, be sure to position them with the heater wire horizontally at the front of the handlebar for proper routing, both sides.

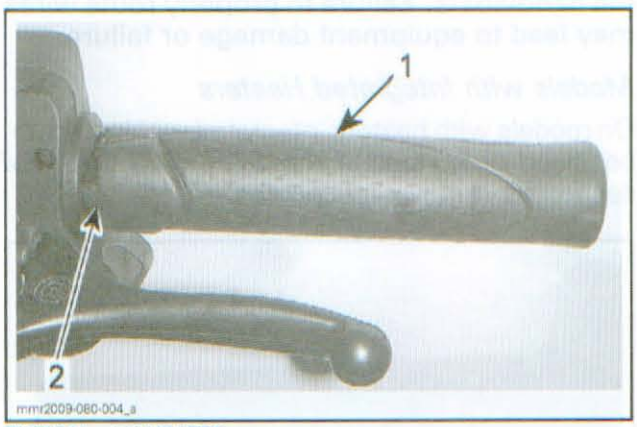

TYPICAL - LH HEATER
1. *Grip with integrated heater element*
2. *Heater wire front horizontal position*

www.midwestmanuals.com

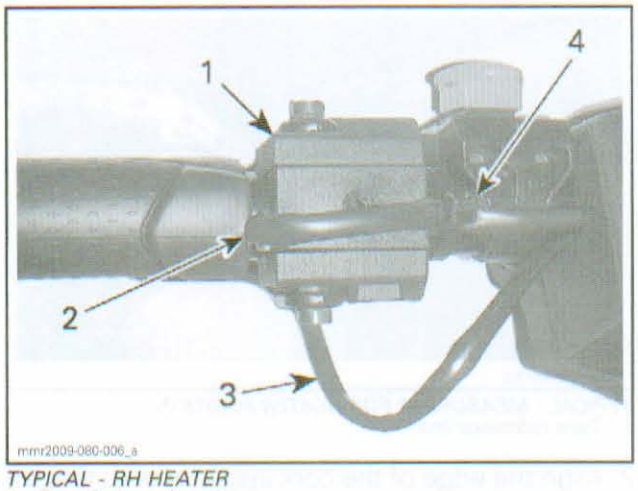

TYPICAL - RH HEATER
1. *Throttle lever housing*
2. *Heater wire front horizontal position*
3. *Throttle lever heater wire*
4. *Locking tie*

Models with Adhesive Film Heaters (Steel Handlebar)

To install this type heater, follow the instructions in the *MODELS WITH ADHESIVE FILM HEATERS (ALUMINUM HANDLEBARS)* procedure.

However, pay attention to the following.

- Reference line for locating inside edge of heater shall be at 129 mm (5 in) from the end of the handlebar. This will leave 14 mm (1/2 in) not covered by the heater at the end of the bar.
- Cork insulators shall be applied centered on top of the handlebar so that the ends meet to form the joint under the handlebar.
- LH heater shall be applied so that its wiring is in front of the handlebar to ensure proper routing through the multifunction switch housing.
- RH heater shall be applied so that its wiring is in back of the handlebar to ensure proper routing through the throttle lever housing.

NOTE: Heater wire is routed through multifunction switch housing in following illustration.

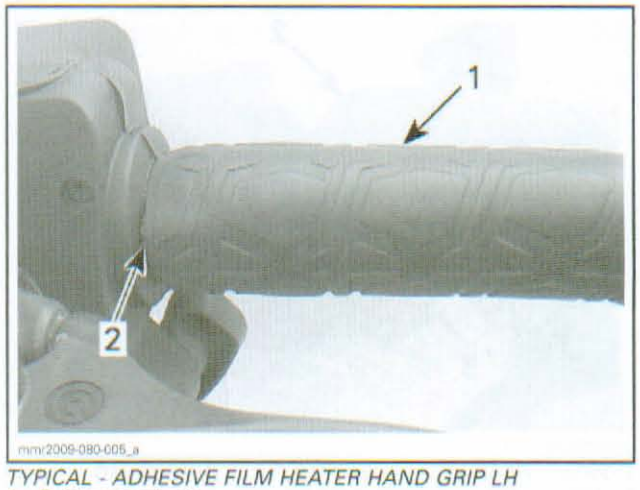

TYPICAL - ADHESIVE FILM HEATER HAND GRIP LH
1. *Rubber hand grip*
2. *Heater wire horizontal position*

NOTICE Ensure LH heater wires are properly routed through multifunction switch housing to prevent them from being pinched when installing housing cover. Pinched or damaged wires may result in a short circuit.

NOTE: Heater wire is routed through throttle lever housing in following illustration.

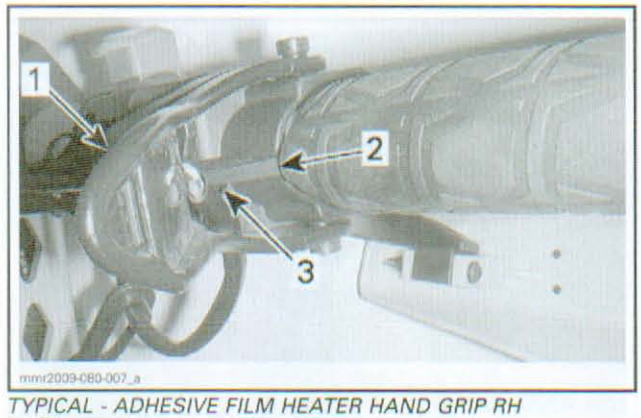

TYPICAL - ADHESIVE FILM HEATER HAND GRIP RH
1. *Throttle lever*
2. *Film heater wire*
3. *Passage hole in throttle lever housing*

www.midwestmanuals.com

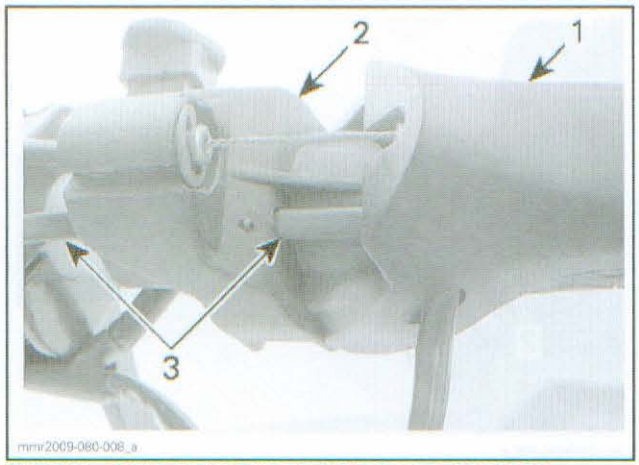

TYPICAL - REAR VIEW, THROTTLE FULLY DEPRESSED
1. *Throttle lever*
2. *Throttle lever housing*
3. *Film heater wire routing through throttle lever housing*

⚠ WARNING

To ensure RH heater wires do not prevent smooth operation of throttle lever, it must be passed straight through the housing without any slack, and secured with a locking tie immediately after the lever housing.

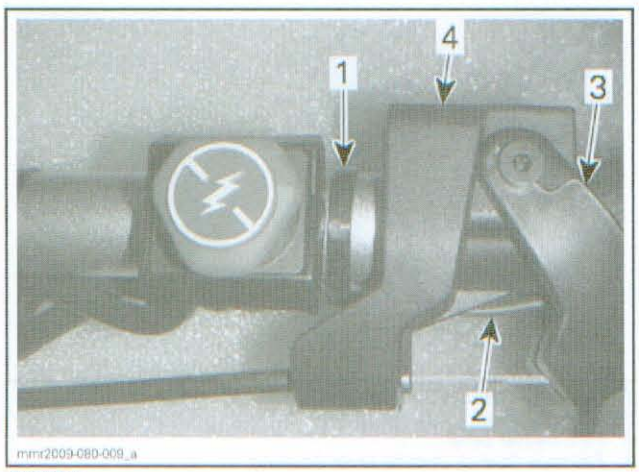

TYPICAL
1. *Locking tie*
2. *Heater wire straight through throttle lever housing*
3. *Throttle lever*
4. *Lever housing*

Models with Adhesive Film Heaters (Aluminum Handlebars)

1. Measure 159 mm (6.25 in) from the end of the handlebar, and across the top of the bend in the bar. Trace a reference line with a marker at that point on the handlebar.

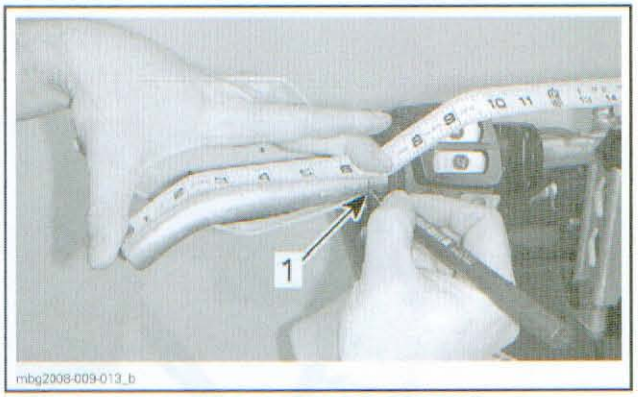

TYPICAL - MEASURING FOR HEATER POSITION
1. *Trace reference line*

2. Align the edge of the cork insulator with the reference line centered with the handlebar folding axis as illustrated.

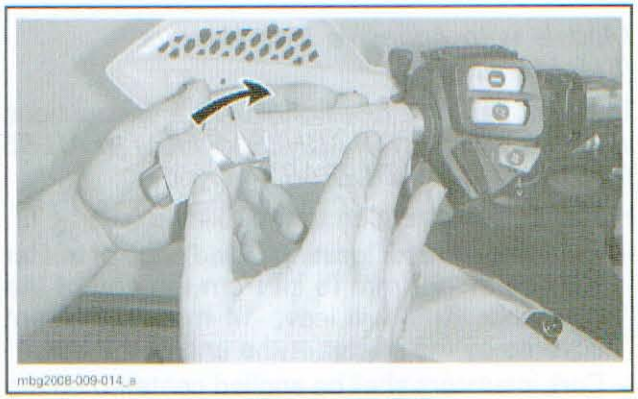

TYPICAL - CORK INSULATOR ALIGNMENT

3. Apply firm pressure to cork insulator to assure proper adherence to handlebar.
4. Align the film heater element with the cork insulator and center of handlebar folding axis as illustrated.

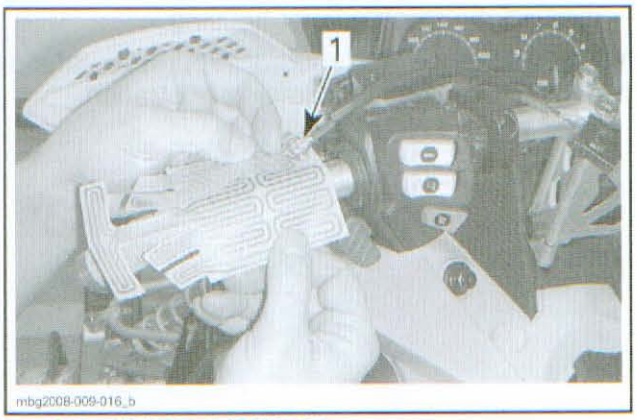

TYPICAL - HEATER ALIGNMENT
1. *Heater wire position (LH front, RH rear)*

5. Apply firm pressure to heater to assure proper adherence to cork insulator.

www.midwestmanuals.com

NOTE: The same heater element is used for both the LH and RH sides. Therefore, the electrical wiring will be in front of the handlebar on the LH side, and behind the handlebar (towards driver) on the RH side.

6. Apply two turns of black electrical tape at each of the four locations illustrated so that it covers the edges of the heater element and prevents snagging and damage to the element during rubber grip installation.

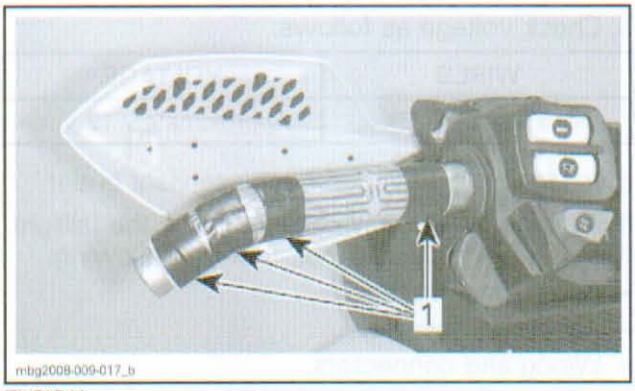

TYPICAL
1. Electrical tape application (4x)

NOTE: It is highly important to apply tape so that it fully secures the electrical wire connections. This will ease installation of the rubber hand grip and prevent undue stress to the connections.

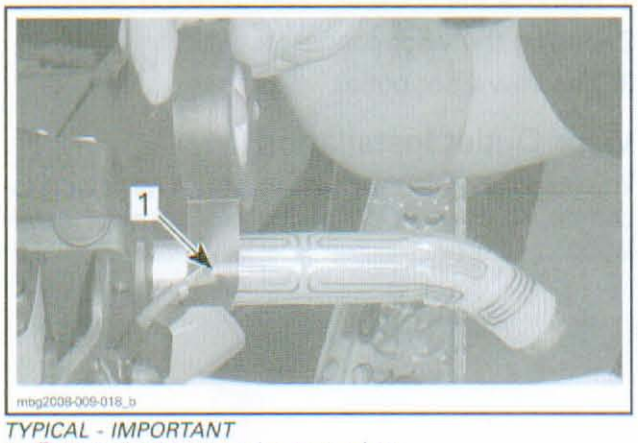

TYPICAL - IMPORTANT
1. Tape application over wire connections

7. Install rubber hand grip, refer to *STEERING SYSTEM* section for detail.
8. Route wiring as noted during the removal procedure.
9. Insert wire connectors in steering connector housing, refer to *WIRING DIAGRAM* for wire color and pin number locations.

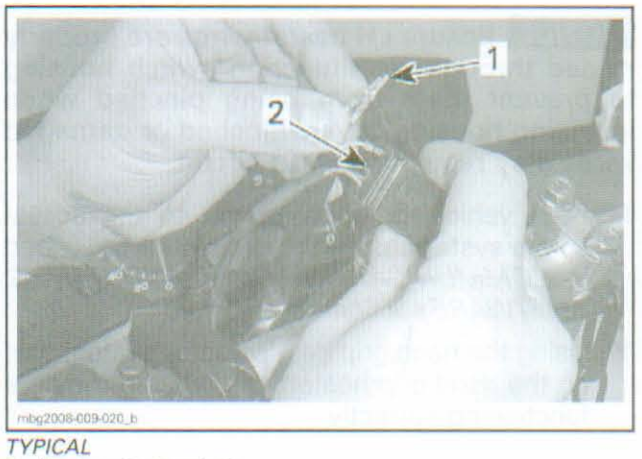

TYPICAL
1. Heater wire terminals
2. Insertion through back of connector

NOTE: On vehicles equipped with premium gauges, only two of the heater wires are used. The ORANGE/VIOLET wire terminal will need to be cut off near the connector, insulated using heat shrink, a terminal end or electrical tape, then stored inside the wire harness protective sheath.

10. Install locking ties to secure the heater wire tightly against the handlebar.

⚠ WARNING

To ensure RH heater wires does not prevent smooth operation of throttle lever, it must be passed straight through the housing without any slack, and secured with a locking tie immediately after the lever housing.

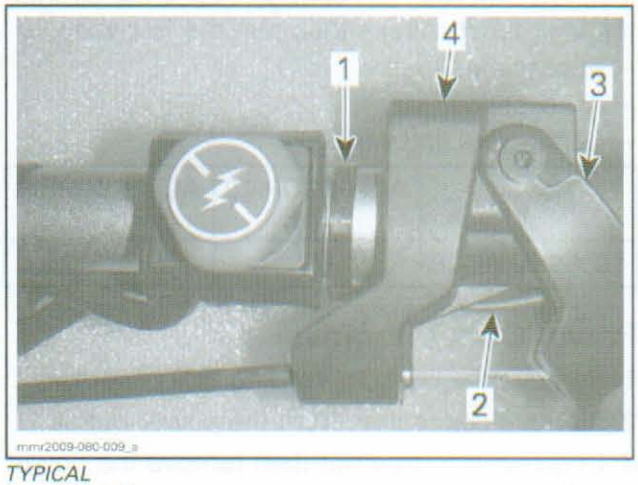

TYPICAL
1. Locking tie
2. Heater wire straight through throttle lever housing
3. Throttle lever
4. Lever housing

www.midwestmanuals.com

NOTICE Ensure LH heater wires are properly routed through multifunction switch housing to prevent them from being pinched when installing housing cover. Pinched or damaged wires may result in a short circuit.

11. Start vehicle or apply power to the accessories system using the procedure described in *COMMUNICATION TOOLS AND B.U.D.S. SOFTWARE* section.
12. Using the hand grip heat selector switch, turn on the hand grip heaters and ensure they are functioning correctly.

12-VOLT POWER OUTLET

Power Outlet Testing

1. First try another accessory, if it does not function, test outlet.
2. Remove console, refer to *BODY* section.
3. Unplug the power outlet connectors.
4. Apply power to the accessories circuits, see *LIGHTING AND ACCESSORIES SYSTEM TESTING* in this section.
5. Measure the voltage as follows.

WIRES		VOLTAGE
RD/YL	BK	Approximately 12 Vdc

If voltage reading is good, replace 12 Volt power outlet.

If you did not read any voltage, check the taillight. If it isn't functioning either, test the following:
- Accessories fuse
- Accessories relay
- Connectors and wiring.

MODEL	ACCESSORIES FUSE	ACCESSORIES RELAY
500SS/600/800R	FC	R1

Power Outlet Removal

1. Remove the console, refer to *BODY* section.
2. Remove connectors from the power outlet.
3. Unscrew the large nut then remove the power outlet.

Power Outlet Installation

The installation is the reverse of the removal procedure, refer to *BODY* section for console installation.

VISOR OUTLET

Visor Outlet Testing

1. First, try another accessory, if it does not function, test visor outlet.
2. Remove the console, refer to *BODY* section.
3. Unplug the visor connector.
4. Apply power to the accessories circuits, see *LIGHTING AND ACCESSORIES SYSTEM TESTING* in this section.
5. Check voltage as follows.

WIRES		VOLTAGE
RD/YL	BK	Approximately 12 Vdc

If voltage reading is good, replace visor outlet.

If you did not read any voltage, check the taillight. If it isn't functioning either, test the following:
- Accessories fuse
- Accessory relay
- Wiring and connectors.

MODEL	ACCESSORIES FUSE	ACCESSORIES RELAY
500SS/600/800R	FC	R1

Visor Outlet Removal

1. Remove the console, refer to *BODY* section.
2. Unplug the visor connector.
3. Unscrew visor outlet.

Visor Outlet Installation

The installation is the reverse of the removal procedure, refer to *BODY* section for console installation.

www.midwestmanuals.com

DRIVE BELT

SERVICE TOOLS

Description	Part Number	Page
BELT TENSION TESTER	414 348 200	431
DRIVEN PULLEY OPENING TOOL	529 017 200	427
	529 036 127	427, 429

GENERAL

APPLICATION CHART

MODEL	DRIVE BELT (P/N)
500SS 600	417 300 197
600 HO E-TEC 800R (MX Z)	417 300 383
800R (Summit)	417 300 377

PROCEDURES

DRIVE BELT GUARD

Drive Belt Guard Removal

⚠ WARNING

NEVER operate the snowmobile without the drive belt guard securely installed.

Open the LH side panel.

Remove retaining pin.

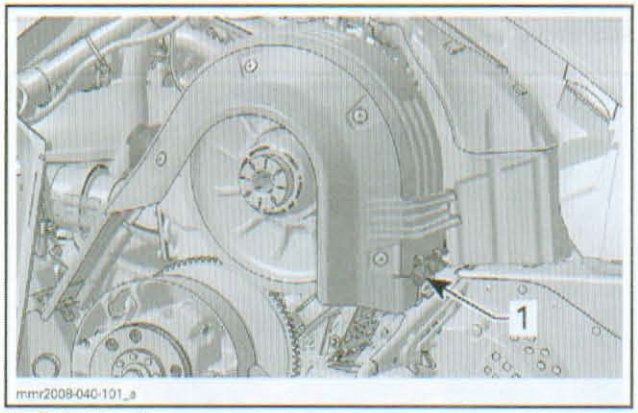

1. Retaining pin

Lift rear portion of guard then release from front tabs by pivoting the guard outwards.

Drive Belt Guard Installation

Place the front LH slot of the guard over the longest tab.

Pivot the guard inward to engage the shortest tab in the RH slot.

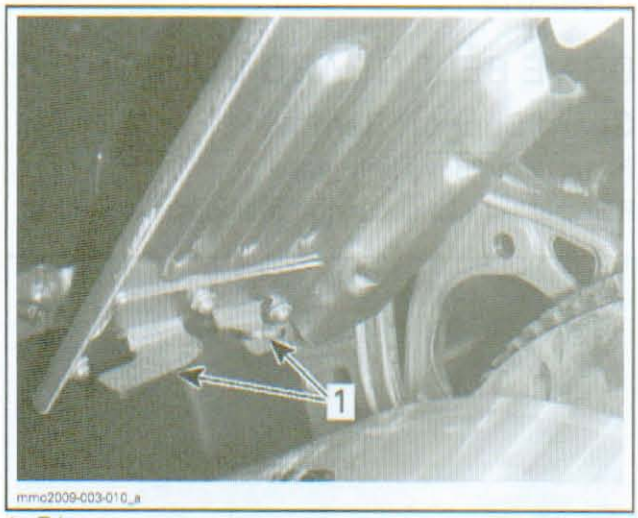

1. Tabs

Position the grommet over the retaining rod. It may be necessary to slightly lift the console to make room.



1. Retaining rod

www.midwestmanuals.com

Position rear portion of the drive belt guard over the retainer and secure it using the retaining pin.

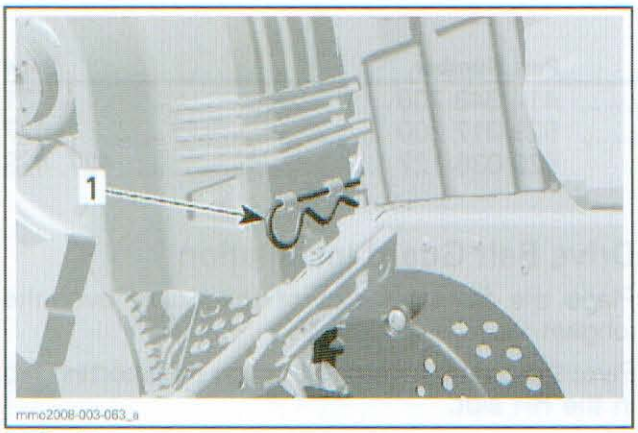

1. Retaining pin

DRIVE BELT GUARD SUPPORT

Guard Support Removal

Remove the drive belt guard.

Remove screws securing the support to vehicle.

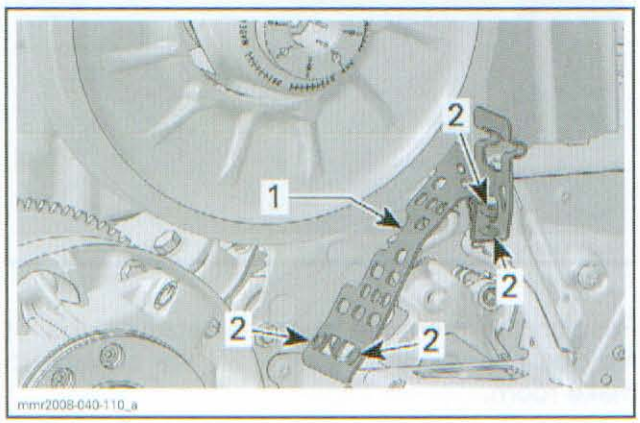

1. Drive belt guard support
2. Screws

Guard Support Installation

The installation is the reverse of the removal procedure.

Tighten screws to 5 N•m (44 lbf•**in**).

DRIVE BELT

Drive Belt Removal (Ring Type Pulley Adjuster)

Open the LH side panel.

Remove the drive belt guard.

Using the spark plug tool (included in the tool kit) or an 11/16 in thin wall socket, loosen (± 4 turns) the adjustment ring adapter located inside adjustment ring.

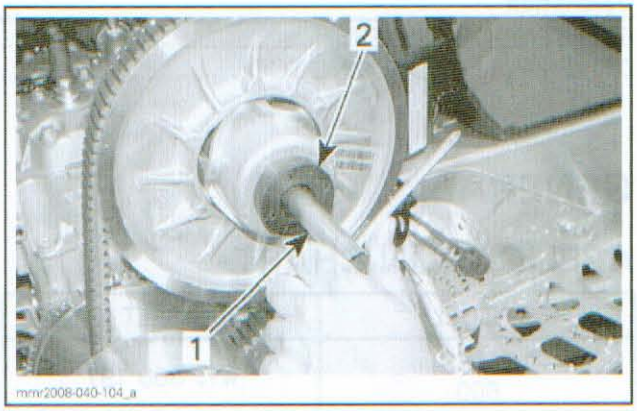

1. Spark plug tool
2. Driven pulley adjustment ring

To open the driven pulley, proceed as follows with one of the following tools.

Procedure with Suspension Adjustment Tool

Using the suspension adjustment tool (included in the tool kit), open the driven pulley by turning the tool clockwise.

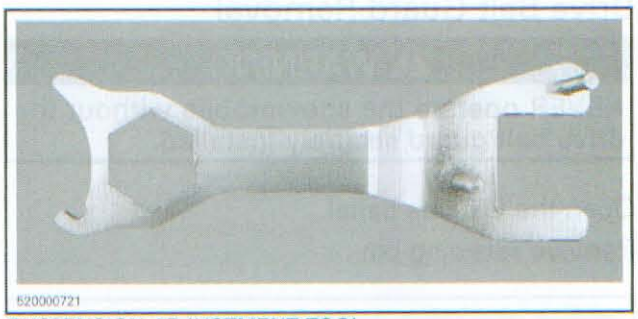

SUSPENSION ADJUSTMENT TOOL

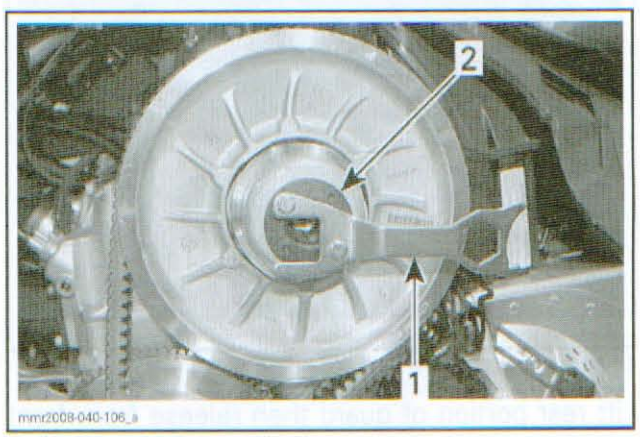

1. Suspension adjustment tool
2. Driven pulley adjustment ring

To remove belt, slip the belt over the top of driven pulley.

www.midwestmanuals.com

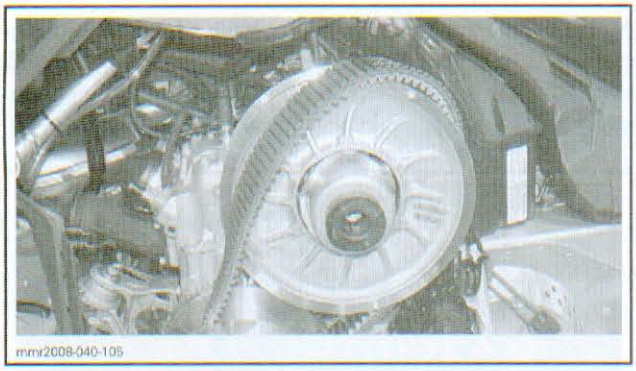

Procedure with Driven Pulley Opening Tool

Using the DRIVEN PULLEY OPENING TOOL (P/N 529 036 127), open the driven pulley by turning the tool clockwise.



DRIVEN PULLEY OPENING TOOL (P/N 529 036 127)

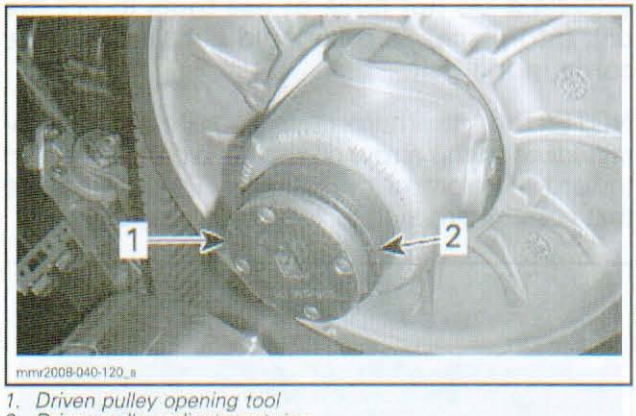

1. *Driven pulley opening tool*
2. *Driven pulley adjustment ring*

To remove belt, slip the belt over the top of driven pulley, then over the drive pulley.

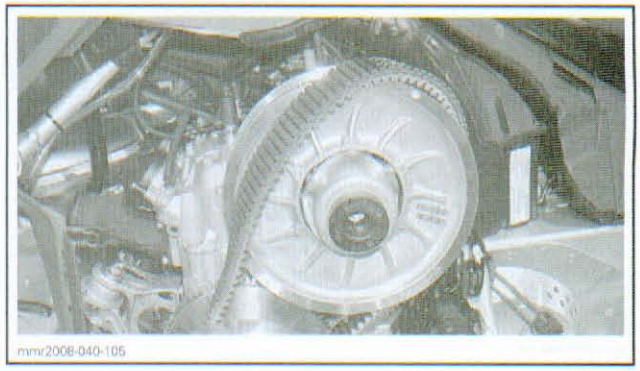

Drive Belt Removal (Screw Type Pulley Adjuster)

1. Remove the drive belt guard.
2. Insert the DRIVEN PULLEY OPENING TOOL (P/N 529 017 200) (or the tool provided in the tool box) in the threaded hole on the adjuster hub.



DRIVEN PULLEY OPENING TOOL (P/N 529 017 200)

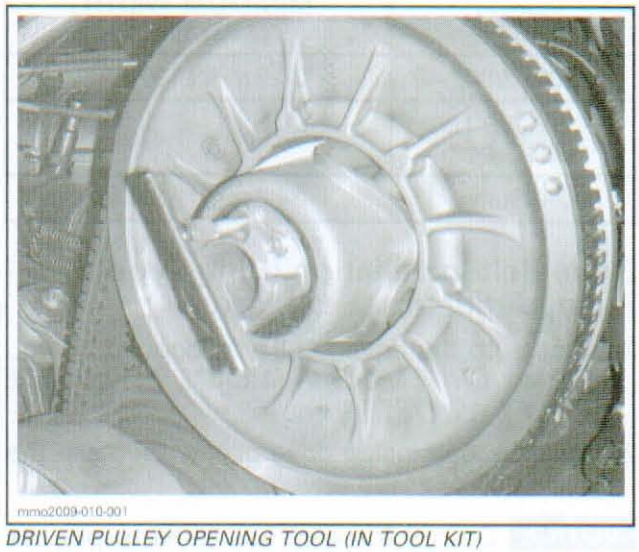

DRIVEN PULLEY OPENING TOOL (IN TOOL KIT)

3. Open the driven pulley by screwing the tool in.
4. To remove belt, slip the belt over the top of driven pulley, then over the drive pulley.

www.midwestmanuals.com

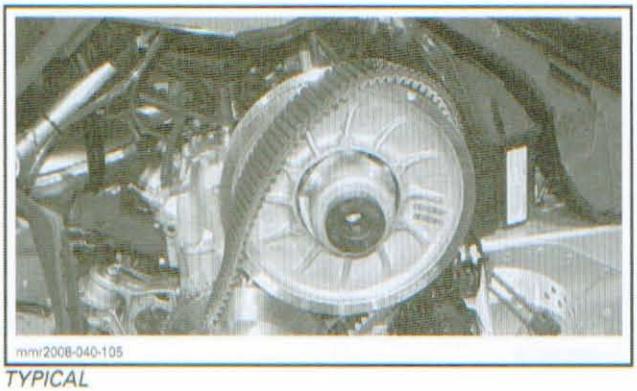

TYPICAL

Drive Belt Inspection

Inspect belt for:
- Cracks
- Fraying
- Abnormal wear (uneven wear, wear on one side, missing cogs, cracked fabric).

If abnormal wear is noted, probable cause could be:
- Pulley misalignment
- Excessive RPM with frozen track
- Fast starts without warm-up period
- Scratched or rusty sheave
- Oil on belt
- Distorted spare belt.

Check drive belt width. Replace the drive belt if its width is under minimum recommended specification.

MODEL	MINIMUM WIDTH (wear limit)
500SS/600	34.9 mm (1.374 in)
600 HO E-TEC 800R (MX Z)	35.9 mm (1.413 in)
800R (Summit)	34.4 mm (1.354 in)

Drive Belt Installation (Ring Type Pulley Adjuster)

1. Make sure the driven pulley is opened. If not, refer to *DRIVE BELT REMOVAL (RING TYPE PULLEY ADJUSTER)* above.
2. Place the belt inside drive pulley, then slip the top of belt over the driven pulley.

NOTICE **Do not force or use tools to pry the belt into place, as this could cut or break the cords in the belt.**

NOTE: The maximum drive belt life span is obtained when the arrows on the drive belt are directed toward the front of vehicle. This will ensure that correct direction of rotation is respected.

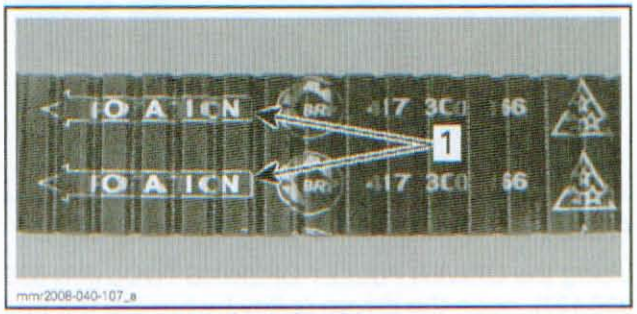

1. Arrows pointing the front of vehicle

3. Adjust the drive belt height. Refer to *DRIVE BELT HEIGHT ADJUSTMENT (RING TYPE PULLEY ADJUSTER)* and follow steps 4 to 11.

Drive Belt Installation (Screw Type Pulley Adjuster)

1. Make sure the driven pulley is opened. If not, refer to *DRIVE BELT REMOVAL (SCREW TYPE PULLEY ADJUSTER)*.
2. Set the drive belt inside drive pulley, then slip the top of belt over the driven pulley.

NOTICE **Do not force or use tools to pry the belt into place, as this could cut or break the cords in the belt.**

NOTE: The maximum drive belt life span is obtained when the arrow on the drive belt is directed toward the front of the vehicle. This will ensure that correct direction of rotation is respected.

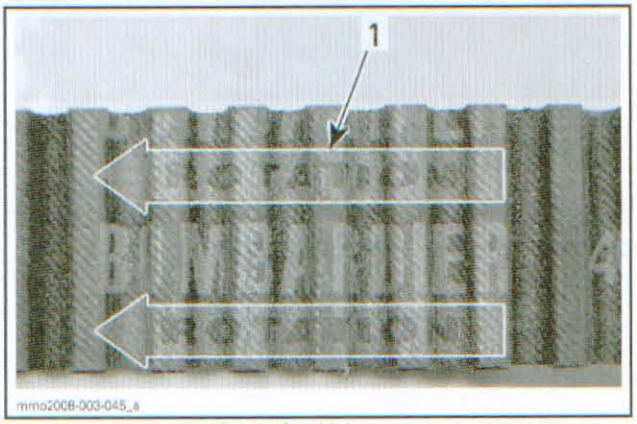

1. Arrow pointing the front of vehicle

3. Unscrew and remove the driven pulley opening tool from the pulley.
4. Rotate the driven pulley several times to properly set the belt between the sheaves.

www.midwestmanuals.com

5. Adjust the drive belt height. Refer to *DRIVE BELT HEIGHT ADJUSTMENT (SCREW TYPE PULLEY ADJUSTER)* and follow steps 3 to 9.

Drive Belt Height Adjustment (Ring Type Pulley Adjuster)

NOTE: Adjust drive belt height every time drive belt is installed.

1. Open the LH side panel.
2. Remove the drive belt guard.
3. Using the spark plug tool (included in the tool kit) or an 11/16 in thin wall socket, loosen (± 4 turns) the adjustment ring adapter located inside adjustment ring.

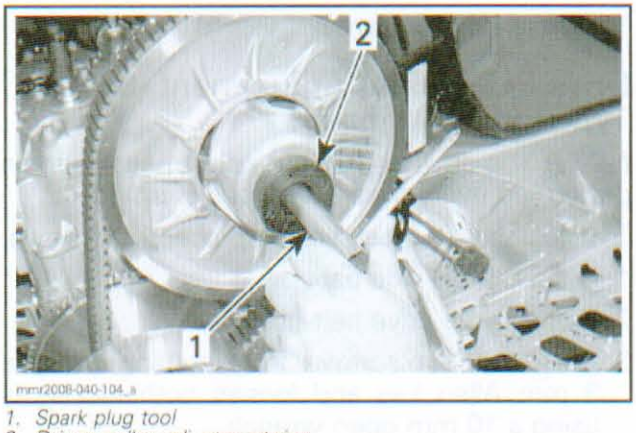

1. Spark plug tool
2. Driven pulley adjustment ring

4. Using the suspension adjustment tool or the DRIVEN PULLEY OPENING TOOL (P/N 529 036 127), turn the driven pulley adjuster accordingly to achieve the required drive belt height.

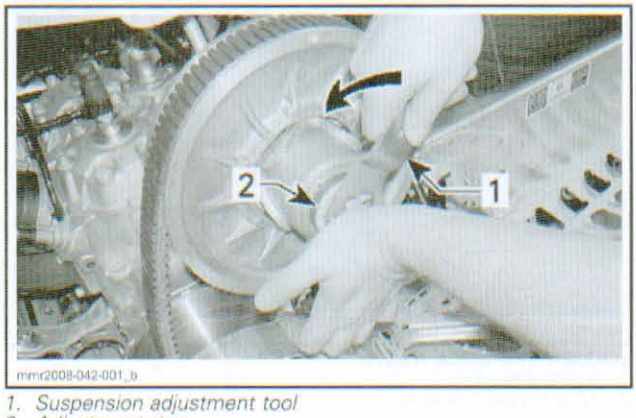

1. Suspension adjustment tool
2. Adjustment ring

5. Manually rotate drive belt to position it properly inside pulley sheaves.

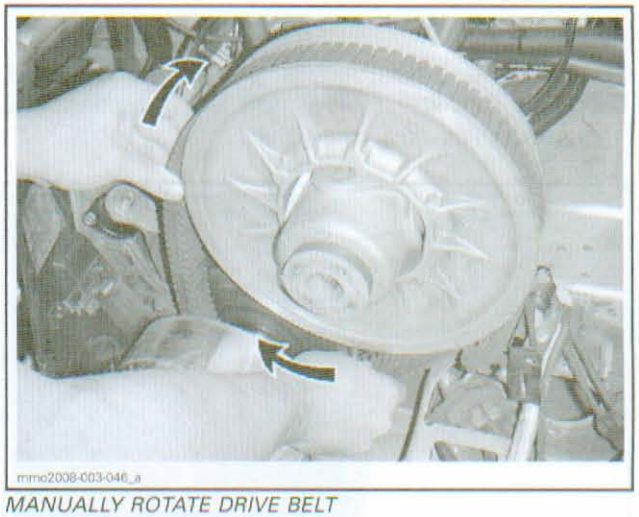

MANUALLY ROTATE DRIVE BELT

500SS

Repeat steps 4 and 5 until the external side of drive belt exceeds the driven pulley edge by 2 mm (.079 in).

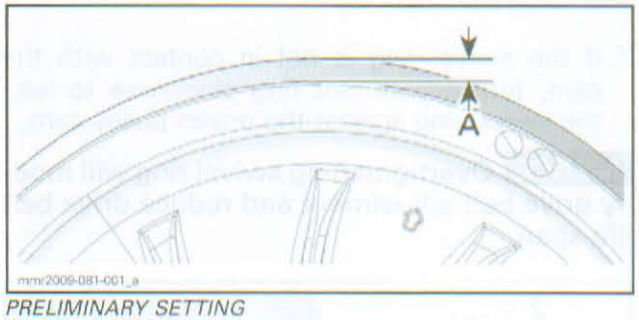

PRELIMINARY SETTING
A. 2 mm (.079 in)

600 HO E-TEC and 800R

Repeat steps 4 and 5 until the bottom of grooves on the external side of drive belt are flush with the driven pulley edges.

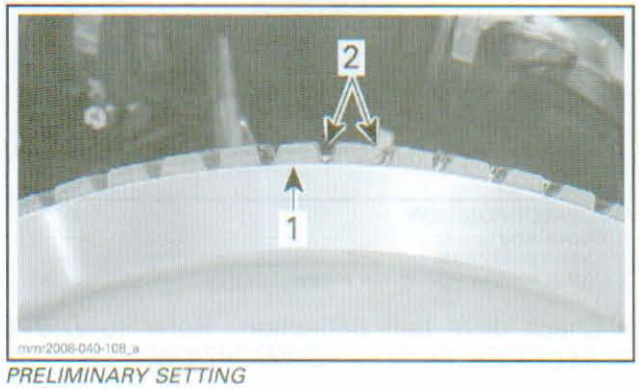

PRELIMINARY SETTING
1. Driven pulley edge
2. External drive belt grooves

www.midwestmanuals.com

All Models

6. When the drive belt is properly positioned, ensure that the swivel ring leans against the driven pulley cam.

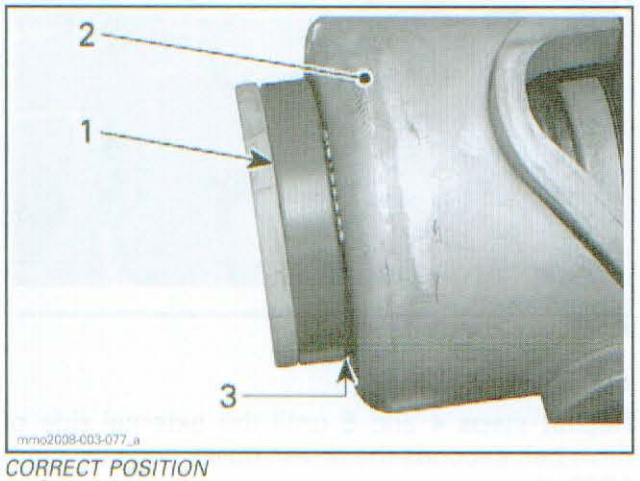

CORRECT POSITION
1. *Swivel ring*
2. *Driven pulley cam*
3. *In contact with driven pulley*

7. If the swivel ring is not in contact with the cam, turn adjustment ring clockwise to lean the swivel ring against the driven pulley cam.

NOTICE **Overtightening swivel ring will modify drive belt adjustment and reduce drive belt life span.**

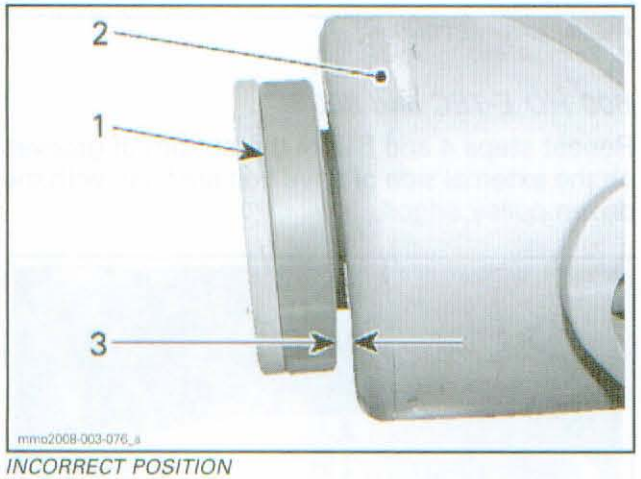

INCORRECT POSITION
1. *Swivel ring*
2. *Driven pulley cam*
3. *Not in contact with driven pulley*

8. Check drive belt deflection. Refer to *DRIVE BELT DEFLECTION VERIFICATION.*

9. Using the spark plug tool (included in the tool kit) or an 11/16 in thin wall socket, snug up the locking nut (± 4 turns).

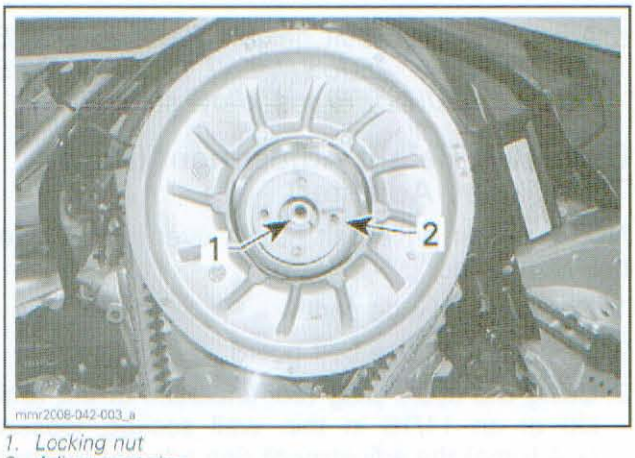

1. *Locking nut*
2. *Adjustment ring*

10. Reinstall the drive belt guard.

11. Close LH side panel.

Drive Belt Height Adjustment (Screw Type Pulley Adjuster)

NOTE: The drive belt height adjustment must be performed every time a new belt is installed.

To adjust the drive belt height, proceed as follows:

1. Open the LH side panel.
2. Remove the drive belt guard.
3. Keep the set screws from turning using a 3 mm Allen key and loosen both lock nuts using a 10 mm open wrench.

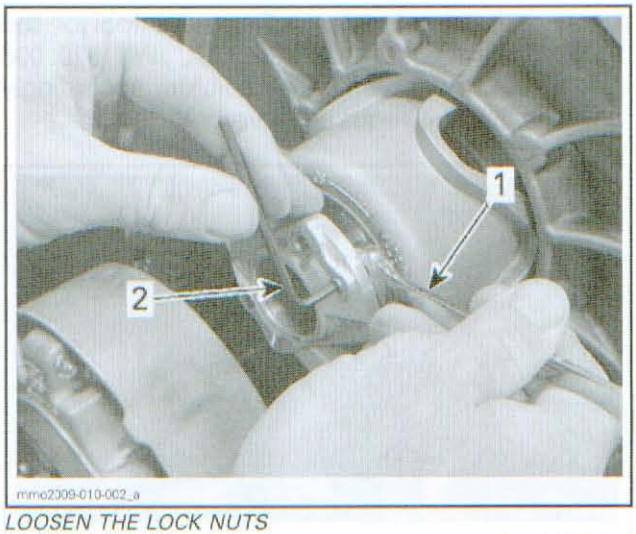

LOOSEN THE LOCK NUTS
1. *3 mm Allen key*
2. *10 mm open wrench*

4. Turn one set screw 1/4 turn at a time then rotate the driven pulley to properly set the belt between the pulley sheaves. Repeat until the belt cord reaches the recommended height.

www.midwestmanuals.com

NOTE: Turning the set screws clockwise lowers the belt in the pulley. Turning the set screws counterclockwise raises the belt in the pulley.

500SS

The external side of drive belt must exceed the driven pulley edge by 2 mm (.079 in).

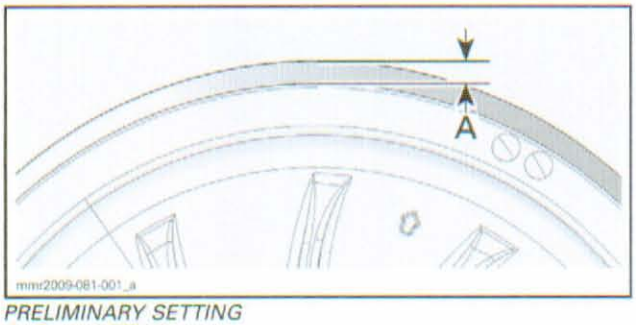

PRELIMINARY SETTING
A. 2 mm (.079 in)

600 HO E-TEC and 800R

The bottom of grooves on the external side of drive belt reach the driven pulley edges.

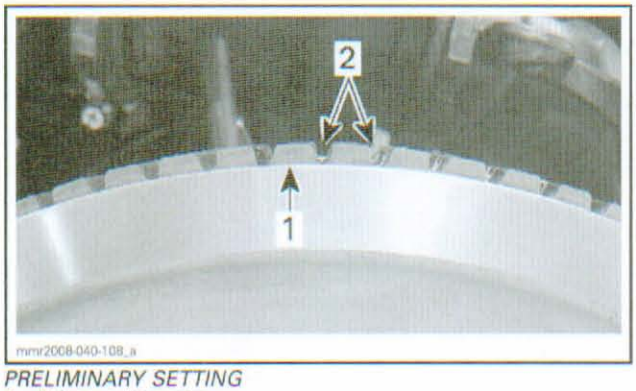

PRELIMINARY SETTING
1. Driven pulley edge
2. External drive belt grooves

5. Set the other set screw so that it rests on the steel ring.

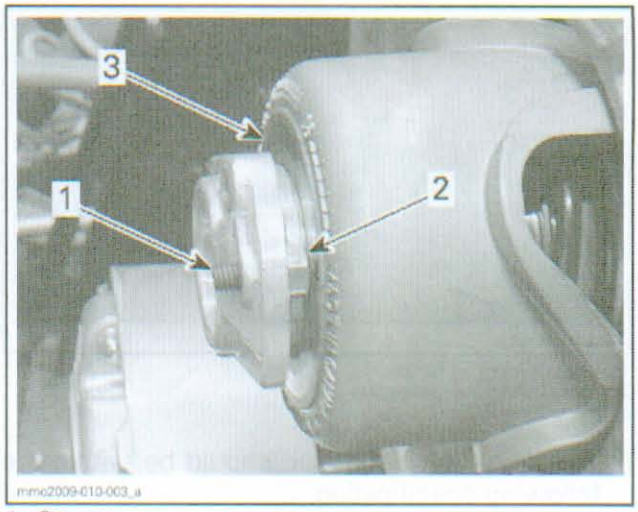

1. Set screw
2. Lock nut
3. Steel ring

6. Check drive belt deflection. Refer to *DRIVE BELT DEFLECTION VERIFICATION.*
7. Keep the set screws from turning and tighten the lock nuts towards the adjuster hub to 5 N•m (44 lbf•**in**)
8. Install the drive belt guard.
9. Close side panel.

Drive Belt Deflection Verification

1. Make sure drive belt height is adjusted (preliminary setting).
2. Position a reference rule on drive belt.
3. Use the BELT TENSION TESTER (P/N 414 348 200) as explained below.
   - 3.1 Slide lower O-ring of deflection scale to specified measure.
   - 3.2 Slide upper O-ring to 0 (zero) on the force scale.

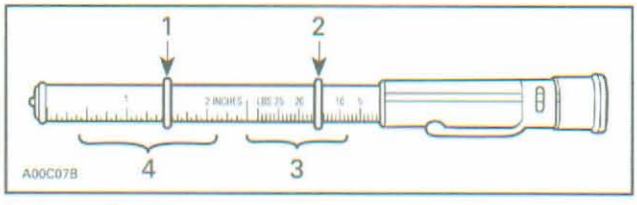

1. Lower O-ring
2. Upper O-ring
3. Force (read down)
4. Deflection (read up)

4. Apply pressure until lower O-ring is flush with edge of rule and read force on the upper scale at top edge of O-ring.

www.midwestmanuals.com

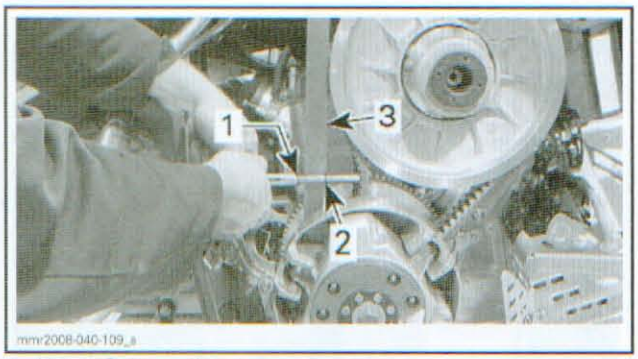

1. *Upper O-ring — force*
2. *Lower O-ring — deflection*
3. *Reference rule*

5. The drive belt deflection should be within the following specification.

MODEL	DEFLECTION	FORCE
All	32 ± 5 mm (1.260 ± .197 in)	11.3 kgf (24.9 lbf)

6. If the deflection is slightly out of specification, readjust drive belt height from the preliminary setting until deflection is correct.

   6.1 If deflection is too far out from the drive belt height preliminary setting, check for the following:
   - Try a new belt.
   - Inspect engine supports.
   - Inspect countershaft and bearing.
   - Inspect chassis for damages.

www.midwestmanuals.com

DRIVE PULLEY

SERVICE TOOLS

Description	Part Number	Page
BUSHING REMOVER/INSTALLER	529 031 200	440
DRIVE PULLEY HOLDER	529 035 674	436, 445
DRIVE PULLEY PULLER	529 022 400	436
SLIDER SHOE FORK	529 005 500	437, 443
SLIDING SHEAVE BUSHING REMOVER/INSTALLER	529 035 931	440, 442
SPRING COMPRESSOR	529 036 012	438, 440, 442–443

SERVICE PRODUCTS

Description	Part Number	Page
LOCTITE 680	293 800 114	442
PULLEY FLANGE CLEANER	413 711 809	440

www.midwestmanuals.com

TRA III

500SS/600/600 HO E-TEC

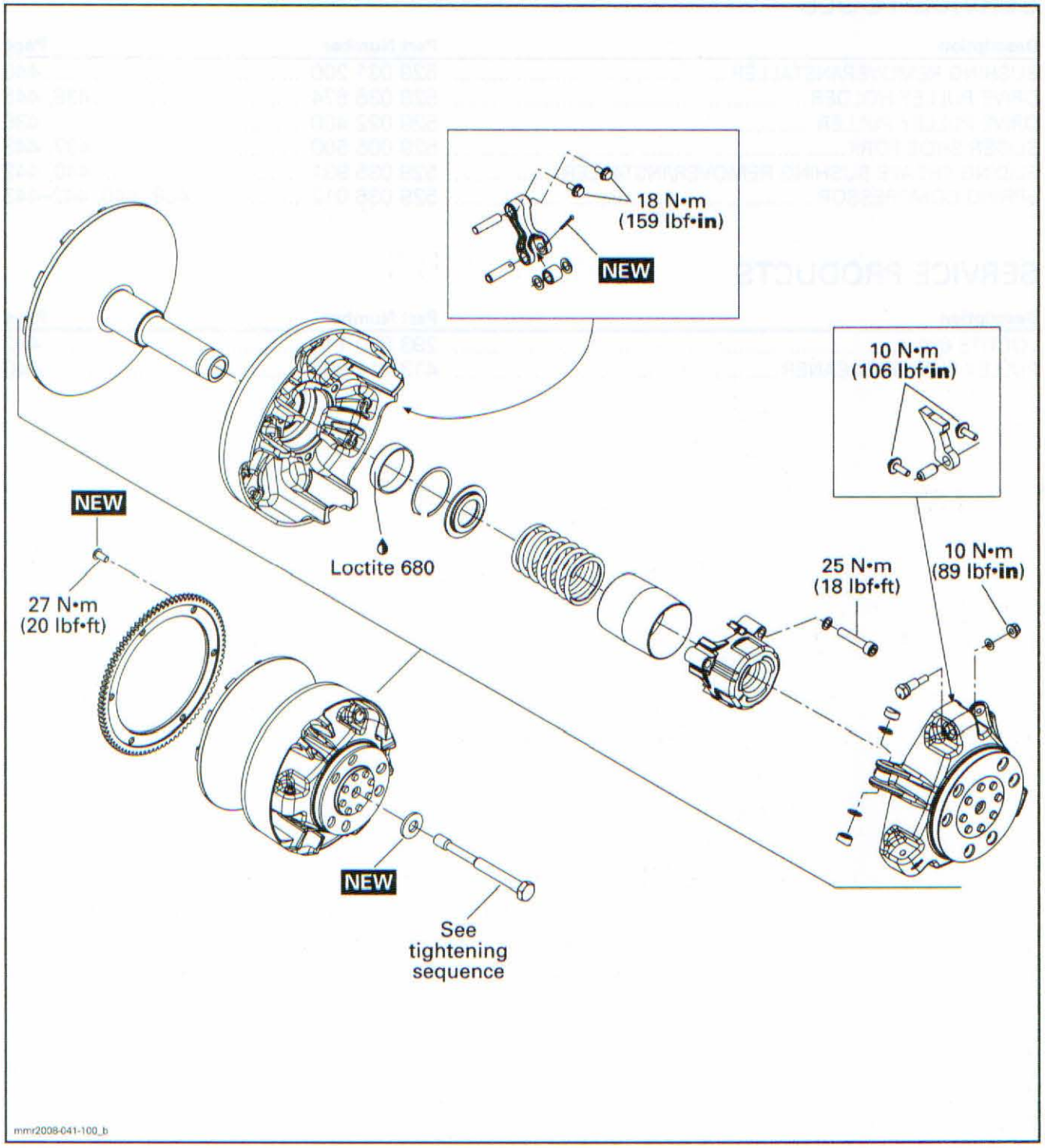

www.midwestmanuals.com

TRA VII

800R

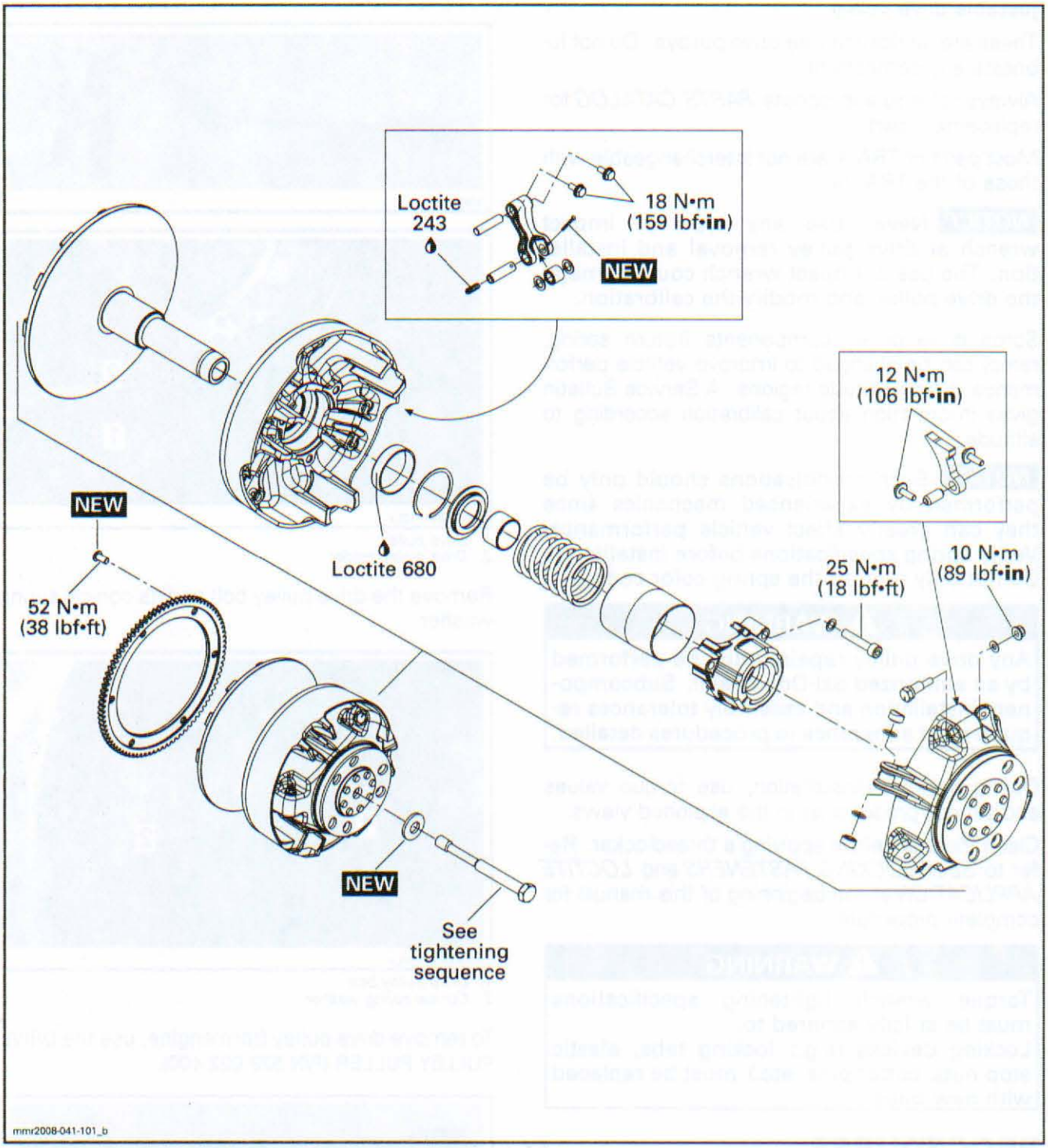

www.midwestmanuals.com

GENERAL

TRA drive pulley stands for **Total Range Adjustable** drive pulley.

These are lubrication free drive pulleys. Do not lubricate any component.

Always refer to appropriate *PARTS CATALOG* for replacement part.

Most parts of TRA III are not interchangeable with those of the TRA VII.

NOTICE Never use any type of impact wrench at drive pulley removal and installation. The use of impact wrench could damage the drive pulley and modify the calibration.

Some drive pulley components (return spring, ramp) can be changed to improve vehicle performance in high altitude regions. A Service Bulletin gives information about calibration according to altitude.

NOTICE Such modifications should only be performed by experienced mechanics since they can greatly affect vehicle performance. Verify spring specifications before installation. Do not only refer to the spring color code.

⚠ WARNING

Any drive pulley repairs must be performed by an authorized Ski-Doo dealer. Subcomponent installation and assembly tolerances require strict adherence to procedures detailed.

During assembly/installation, use torque values and service products as in the exploded views.

Clean threads before applying a threadlocker. Refer to *SELF-LOCKING FASTENERS* and *LOCTITE APPLICATION* at the beginning of this manual for complete procedure.

⚠ WARNING

Torque wrench tightening specifications must be strictly adhered to.
Locking devices (e.g.: locking tabs, elastic stop nuts, cotter pins, etc.) must be replaced with new ones.

PROCEDURES

DRIVE PULLEY

Drive Pulley Removal

Remove drive belt. Refer to *DRIVE BELT* section.

Secure drive pulley with the DRIVE PULLEY HOLDER (P/N 529 035 674). Install it over a sliding sheave tower.

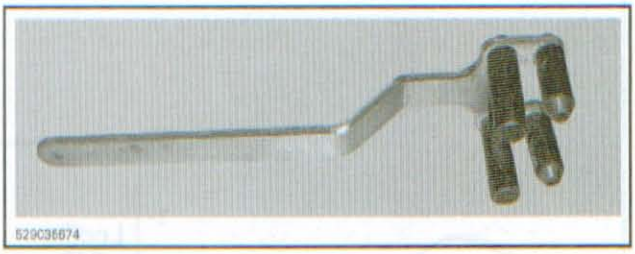

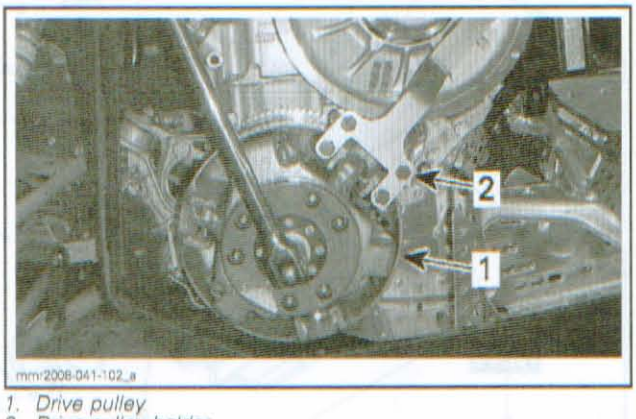

1. *Drive pulley*
2. *Drive pulley holder*

Remove the drive pulley bolt and its conical spring washer.

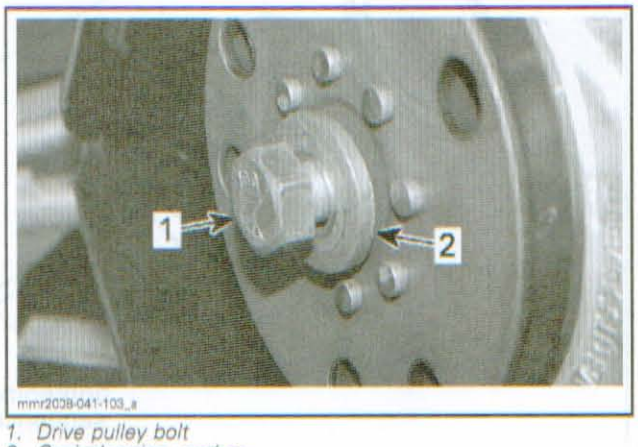

1. *Drive pulley bolt*
2. *Conical spring washer*

To remove drive pulley from engine, use the DRIVE PULLEY PULLER (P/N 529 022 400).



Retain drive pulley with the DRIVE PULLEY HOLDER (P/N 529 035 674), and install the puller in pulley shaft then tighten.

www.midwestmanuals.com

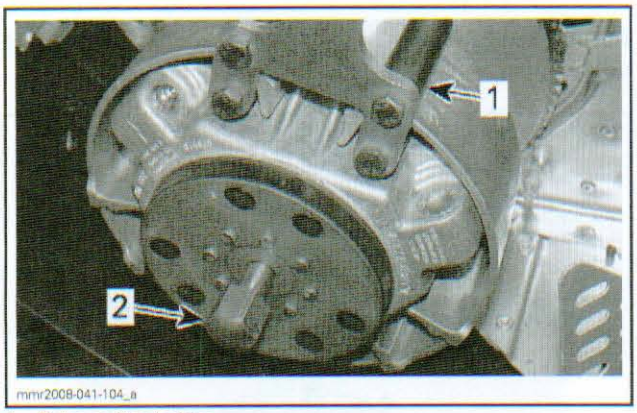

1. *Drive pulley holder*
2. *Drive pulley puller*

NOTICE These pulleys have metric threads. Do not use imperial threads puller. Always tighten puller by hand to ensure that the drive pulley has the same type of threads (metric vs imperial) prior to fully tightening.

Drive Pulley Disassembly

NOTICE NEVER tap on governor cup.

To separate fixed sheave from sliding sheave, screw puller into fixed sheave shaft about 13 mm (1/2 in). Raise drive pulley and hold it by the sliding sheave while knocking on puller head to disengage fixed sheave.

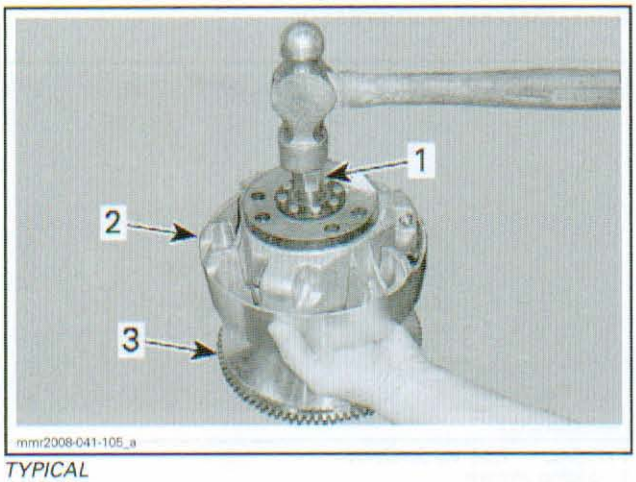

TYPICAL
1. *Puller*
2. *Sliding sheave*
3. *Fixed sheave*

NOTE: No components marking is required before disassembling this drive pulley since it has factory mark and arrows as indexing reference.

Ring Gear

To remove the ring gear, use a heat gun to break the threadlocker on ring gear screws. Discard the ring gear screws.

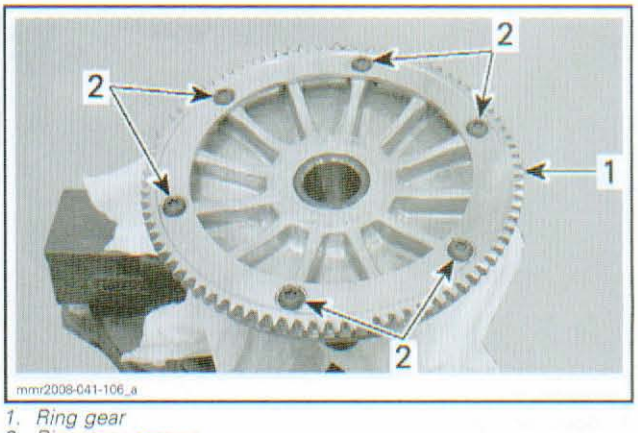

1. *Ring gear*
2. *Ring gear screws*

NOTICE If another tool than a heat gun is used, do not exceed 150°C (302°F).

Slider Shoes and Governor Cup

Carefully lift governor cup until slider shoes come at their highest position into guides.

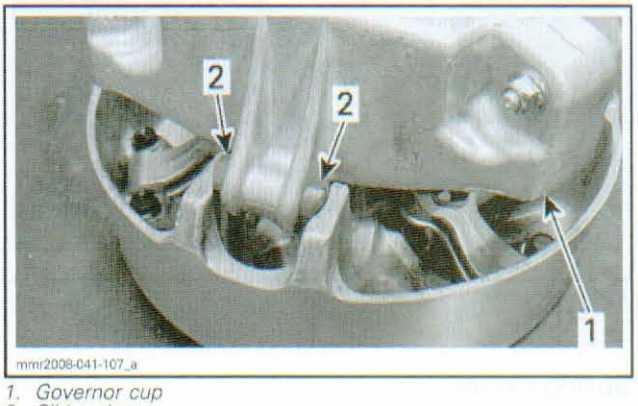

1. *Governor cup*
2. *Slider shoes*

Hold a slider shoe set then carefully lift its housing and install a SLIDER SHOE FORK (P/N 529 005 500). Proceed the same way for other housings lifting one at a time.

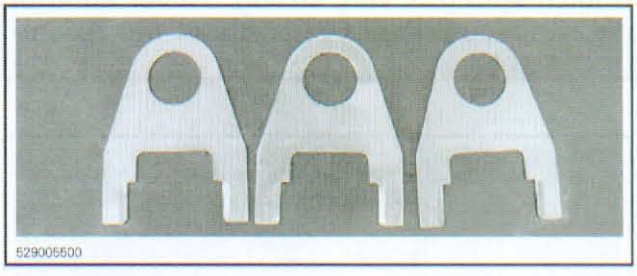

www.midwestmanuals.com

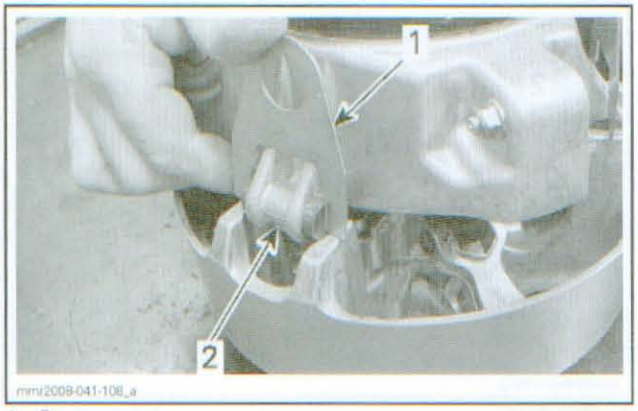

1. Governor cup
2. Slider shoe forks

When all slider shoes are held with the forks, remove the governor cup.

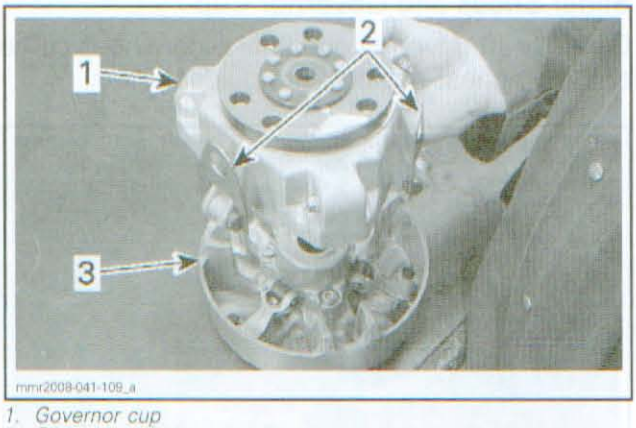

1. Governor cup
2. Slider shoe forks
3. Sliding sheave

Spring Cover

To remove the spring cover, always use the SPRING COMPRESSOR (P/N 529 036 012). The spring cover is under high clutch spring preload.

⚠ WARNING

Clutch spring is very strong. Never attempt to remove spring cover without the recommended tools.

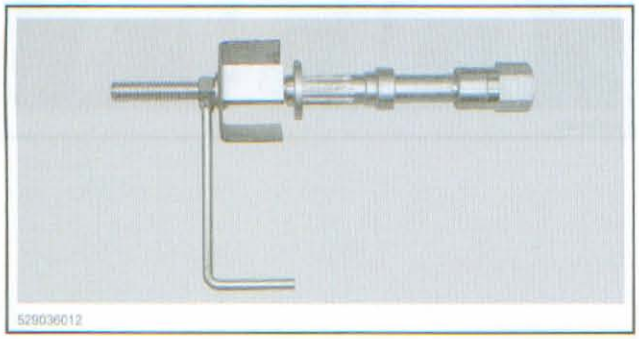

Install support guide of spring compressor in a vice.

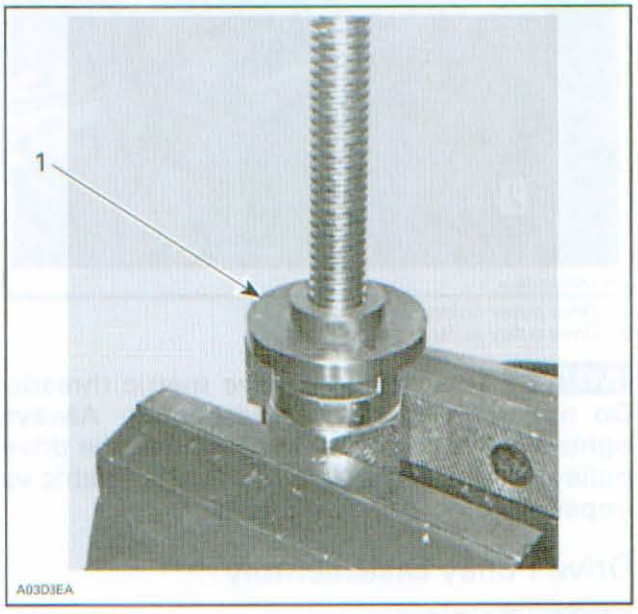

1. Support guide

NOTE: The support guide will prevent bushing damages.

Install sliding sheave then the support cup over spring cover.

Remove 3 Allen screws retaining spring cover then unscrew compressor.

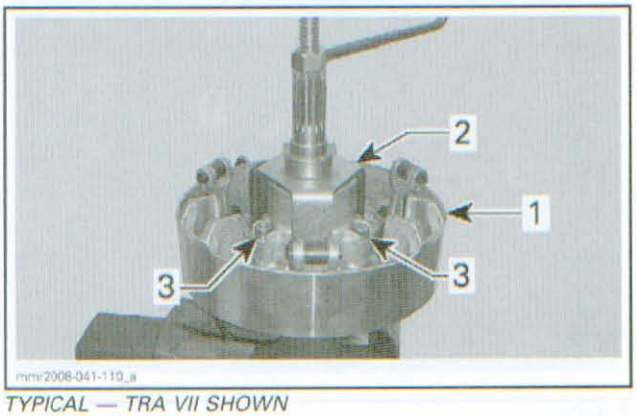

TYPICAL — TRA VII SHOWN
1. Sliding sheave
2. Support cup
3. Spring cover screws

Remove spring cover, spring and spring seat.

www.midwestmanuals.com

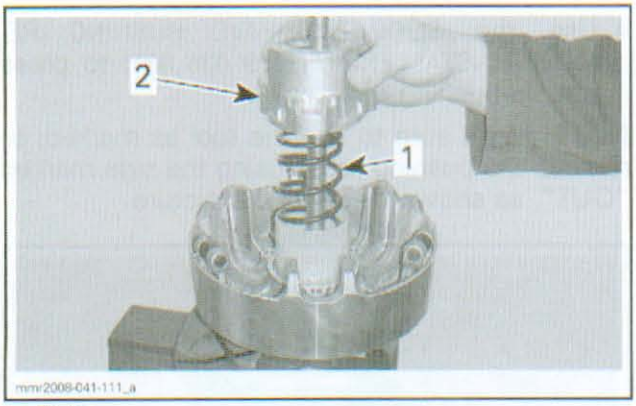

1. Spring
2. Spring cover

Lever, Roller and Pin

Remove lever screws.

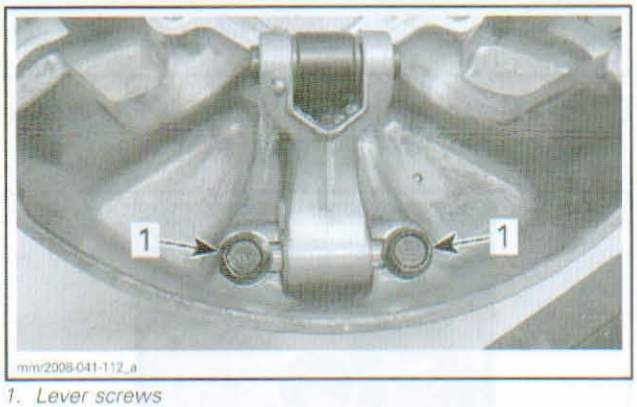

1. Lever screws

Pull lever to remove it from sliding sheave.

Remove and discard the cotter pin.

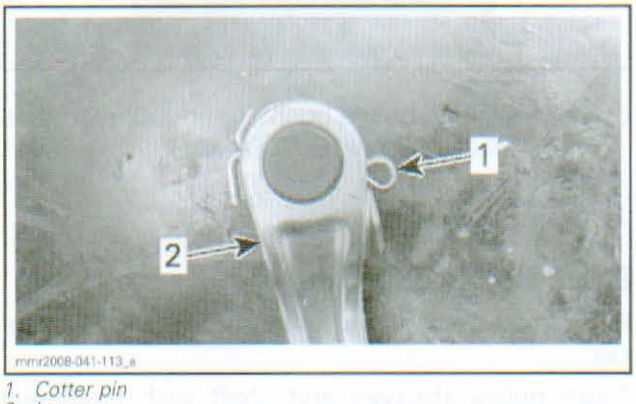

1. Cotter pin
2. Lever

Remove pin, thrust washers and roller.

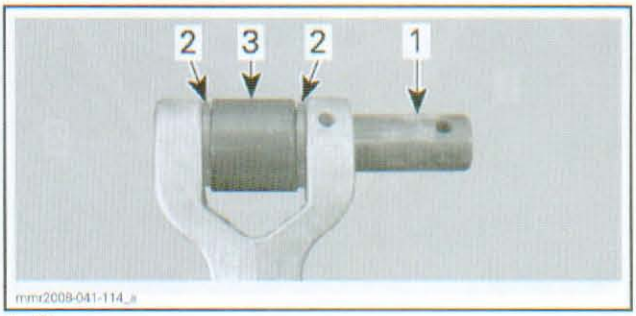

1. Pin
2. Thrust washers
3. Roller

Ramp

Turn the governor cup up side down.

Remove screws retaining ramp to governor cup.

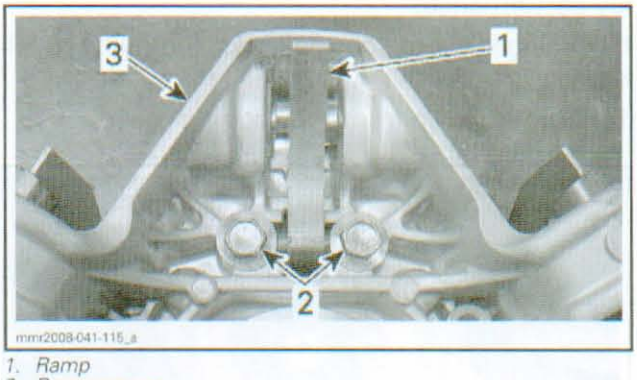

1. Ramp
2. Ramp screws
3. Governor cup

Calibration Screw

Unscrew the nut securing the calibration screw.

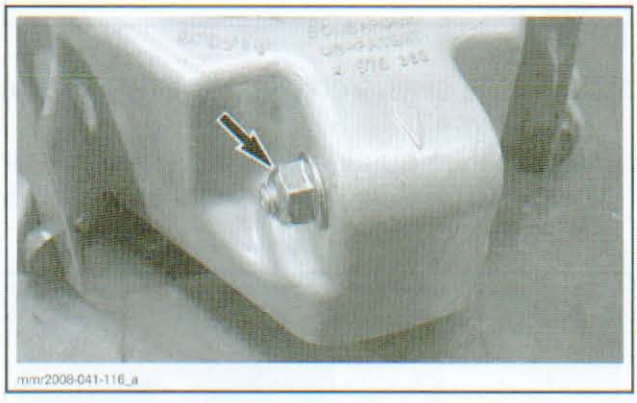

Remove calibration screw and its washer.

www.midwestmanuals.com

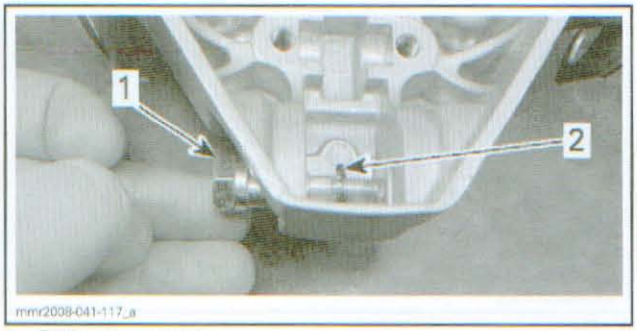

1. Calibration screw
2. Washer

Sliding Sheave Bushing Removal

NOTE: In case of worn out bushing, it is advisable to replace whole sliding sheave assembly as replacing just the bushing may reduce the drive pulley performance.

If bushing is out of specifications, remove it as follows:

1. Remove circlip from the sliding sheave.

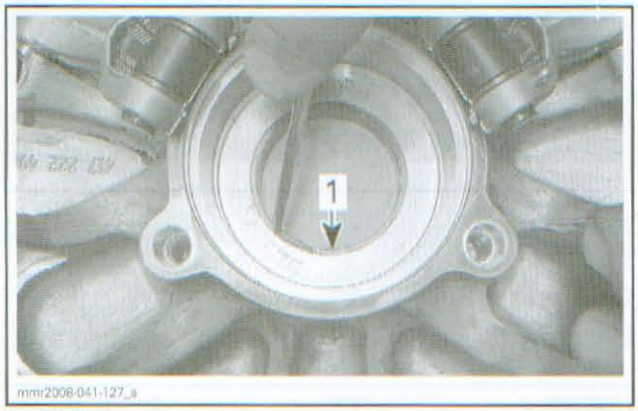

1. Circlip

2. Secure the SPRING COMPRESSOR (P/N 529 036 012) in a vice.
3. Mount the BUSHING REMOVER/INSTALLER (P/N 529 031 200) and the sliding sheave assembly on it.

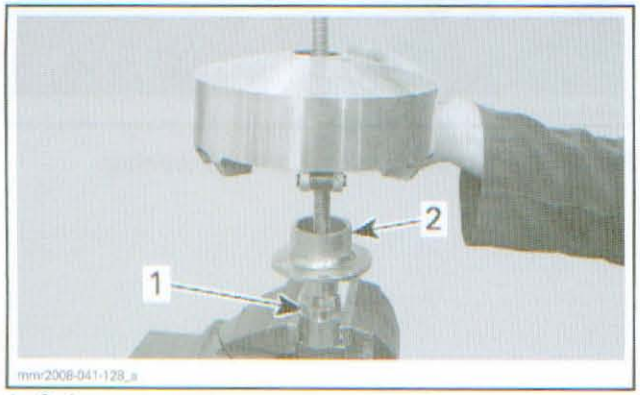

1. Spring compressor
2. Bushing remover/installer

4. Use the SLIDING SHEAVE BUSHING REMOVER/INSTALLER (P/N 529 035 931) to press out old bushing.

NOTE: Make sure to use the tool as marked; to remove the bushing press using the side marked "OUT", as shown below in the picture.



5. Use a soft sand paper to clean sliding sheave bushing mounting surface.

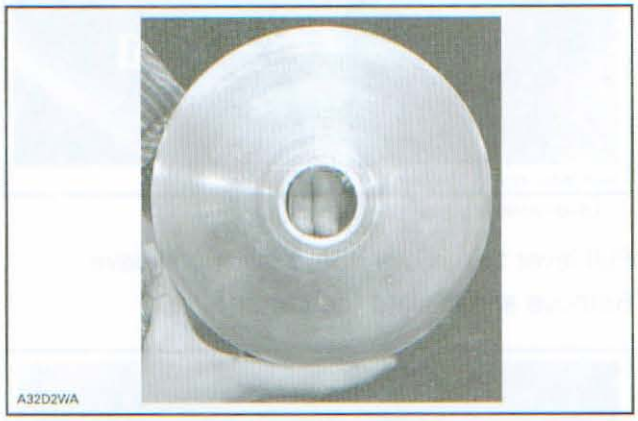

6. Clean sliding sheave bushing mounting surface with PULLEY FLANGE CLEANER (P/N 413 711 809).
7. Clean the circlip groove.

Drive Pulley Cleaning

Parts must be at room temperature before cleaning.

Clean pulley sheaves and shaft with fine steel wool and dry cloth.

Using a paper towel with PULLEY FLANGE CLEANER (P/N 413 711 809), clean crankshaft tapered end and the taper inside the fixed sheave of the drive pulley, crankshaft threads and retaining screw threads.

NOTICE **Avoid contact between cleaner and crankshaft seal because damage may occur.**

www.midwestmanuals.com

Remove all hardened oil deposits that have baked on crankshaft and pulley tapered surfaces with coarse or medium steel wool and/or sand paper no. 600.

NOTICE Do not use any other type of abrasive.

Reclean mounting surfaces with paper towel and cleaning solvent.

Wipe off the mounting surfaces with a clean, dry paper towel.

NOTICE Mounting surfaces must be free of any oil, cleaner or towel residue.

Drive Pulley Inspection

NOTE: During inspection, replace any component if found defective or out of specifications.

Fixed Sheave and Governor Cup

Inspect fixed sheave for marks or scratches.

500SS/600/600 HO E-TEC

Inspect splines and free play between both parts. Maximum free play is 0.5 mm (.02 in) measured at calibration screw radius.

Slider Shoes

Check slider shoes for wear. Replace if groove is not apparent on top.

Check if slider shoe O-rings are cracked, cut or crushed.

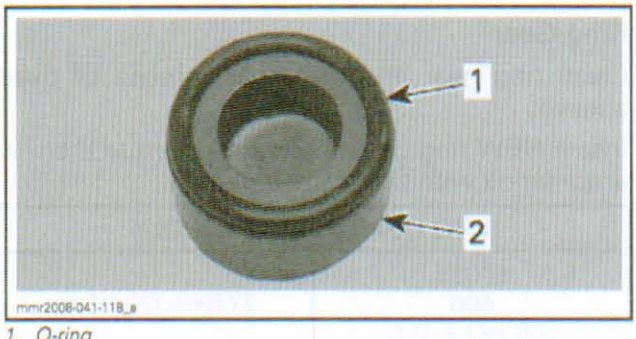

1. *O-ring*
2. *Slider shoe*

Sliding Sheave

Inspect pulley sheave for marks or scratches.

Visually inspect coating of bushings.

Using a bore gauge, measure the inner diameter of sliding sheave bushing. Measuring point must be at least 5 mm (1/4 in) from bushing edge.

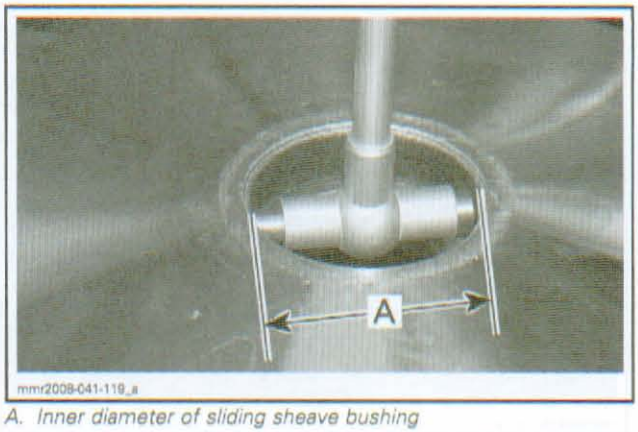

A. Inner diameter of sliding sheave bushing

BUSHING	SERVICE LIMIT
Sliding sheave bushing	40.3 mm (1.587 in)

Lever, Roller and Pin

Check levers for cracks, distortion or other damages.

Check lever pivot for wear.

Check lever flanged bushing for wear.

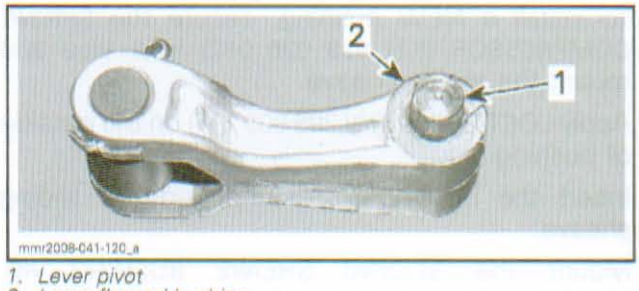

1. *Lever pivot*
2. *Lever flanged bushing*

Check rollers for roundness of external diameter.

Check thrust washers for thickness wear.

Check roller pins for wear.

Spring Cover

Check spring cover for cracks or wear.

Visually inspect the coating of spring cover bushing for wear.

Using a bore gauge, measure the inner diameter of spring cover bushing. Measuring point must be at least 5 mm (1/4 in) from bushing edge.

www.midwestmanuals.com

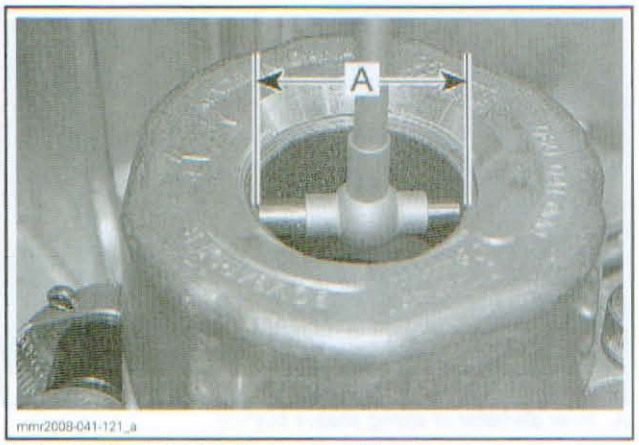

A. Inner diameter of spring cover bushing

BUSHING	SERVICE LIMIT
Spring cover bushing	30.4 mm (1.197 in)

Replace the spring cover if the inner diameter of bushing is out of specification.

Drive Pulley Assembly

Sliding Sheave Bushing Installation

To install a **NEW** bushing, secure the SPRING COMPRESSOR (P/N 529 036 012) in a vice and mount the sliding sheave.

Apply LOCTITE 680 (P/N 293 800 114) on the outside of bushing face.

Insert the bushing from inner side of sliding sheave.

Mount the SLIDING SHEAVE BUSHING REMOVER/INSTALLER (P/N 529 035 931) with side marked "IN" to press in a new bushing.

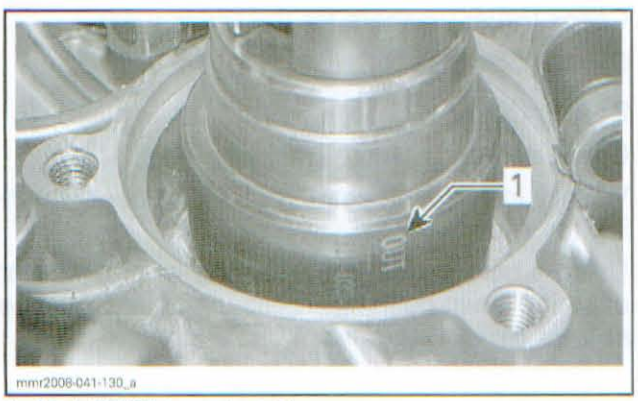

1. Mark "OUT" toward outside

NOTE: Make sure that the bushing is well seated on the sliding sheave.

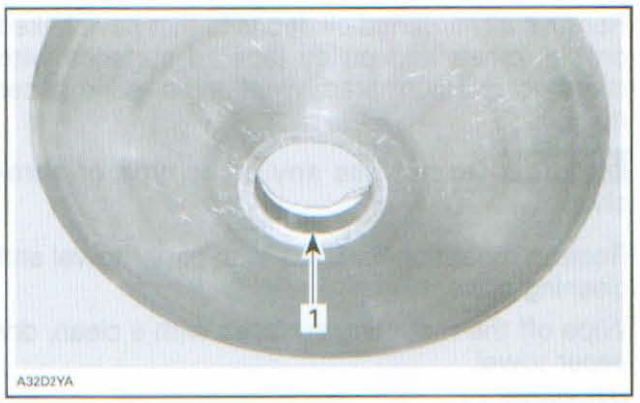

1. Bushing

Install the circlip.

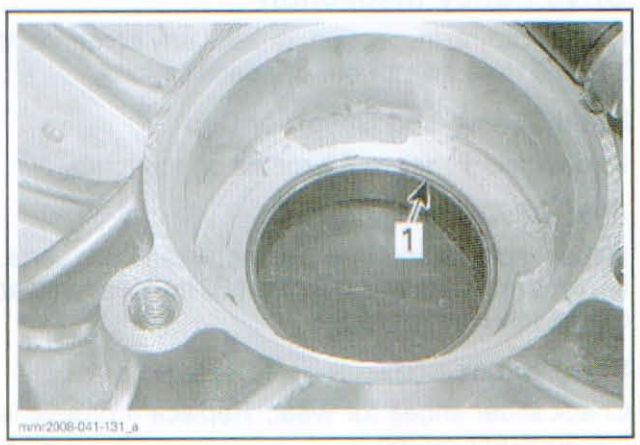

1. Circlip

NOTICE Make sure that the circlip is properly position in its groove.

Ring Gear

Clean ring gear and the inner threads of fixed sheave.

Install **NEW** ring gear screws and torque them in accordance with the following chart.

RING GEAR SCREW TORQUE	
500SS 600 600 HO E-TEC	27 N•m (20 lbf•ft)
800R	52 N•m (38 lbf•ft)

Sliding Sheave, Slider Shoes and Governor Cup

Install an O-ring on each slider shoes.

www.midwestmanuals.com

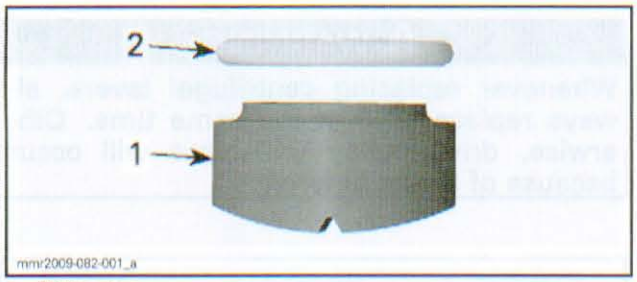

1. *Slider shoe*
2. *O-ring*

Insert slider shoes into governor cup so that groove in each slider shoe is vertical to properly slide in guides.

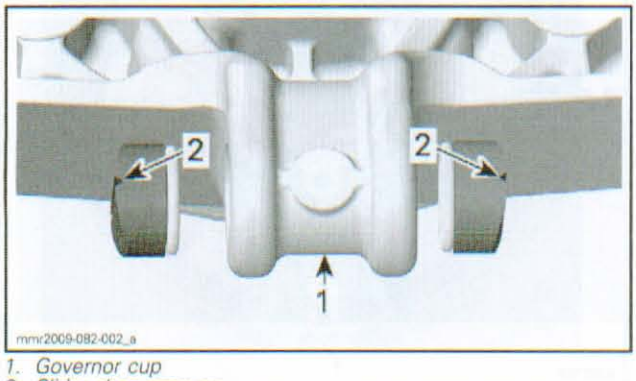

1. *Governor cup*
2. *Slider shoe grooves*

Install a SLIDER SHOE FORK (P/N 529 005 500) into slider shoe grooves to maintain them for governor cup installation. Proceed on 3 set of slider shoes.

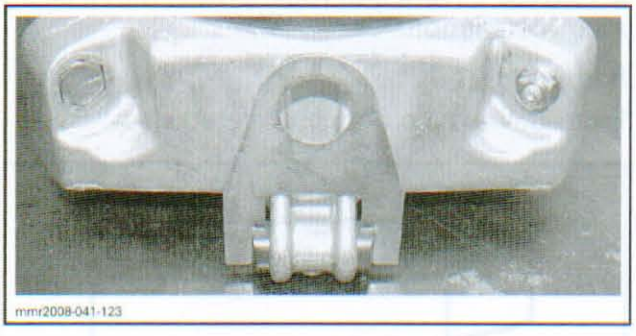

Make sure to align governor cup arrow with sliding sheave mark.

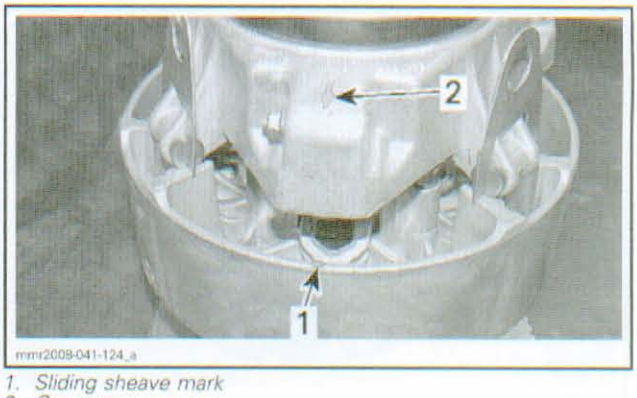

1. *Sliding sheave mark*
2. *Governor cup arrow*

Carefully slide governor cup into sliding sheave.

Remove forks and push governor cup.

Spring Cover

To install spring cover, use SPRING COMPRESSOR (P/N 529 036 012).

Align spring cover arrow with sliding sheave mark.

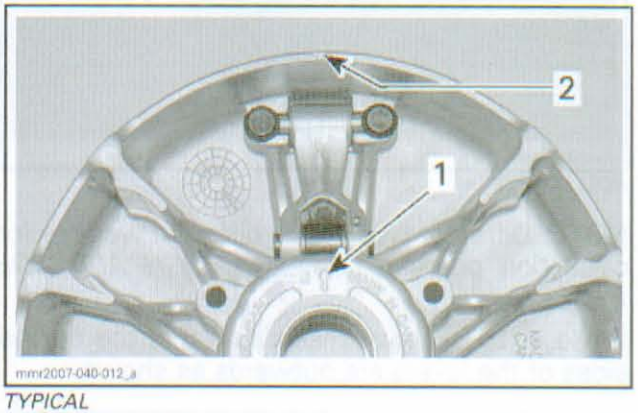

TYPICAL
1. *Spring cover arrow*
2. *Sliding sheave mark*

Tighten spring cover screws to 25 N•m (18 lbf•ft).

Lever, Roller and Pin

Always use the same type of pin as originally installed when servicing. Refer to *TECHNICAL SPECIFICATIONS*.

www.midwestmanuals.com



SOLID PIN



HOLLOW PIN

NOTE: Different types have different weights for calibration purpose. Refer to *HIGH ALTITUDE BULLETIN*.

While installing lever make sure that the curved sides of the levers are outwards as shown.

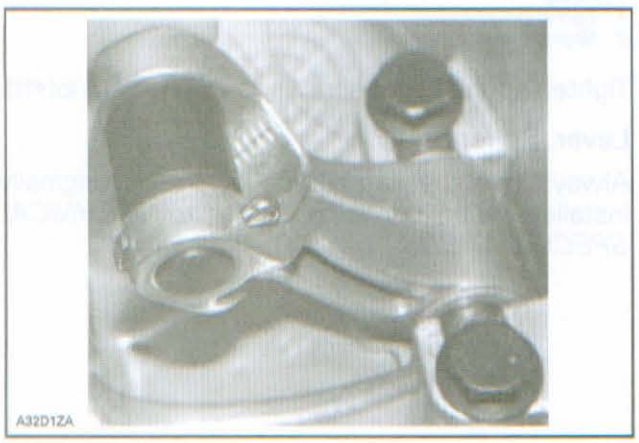

Always install lever assemblies so cotter pin heads are oriented on top when lever is set at the bottom of sliding sheave.

Bend cotter pin ends to sit perfectly against lever.

⚠ WARNING

Whenever replacing centrifugal levers, always replace all 3 at the same time. Otherwise, drive pulley unbalance will occur because of levers difference.

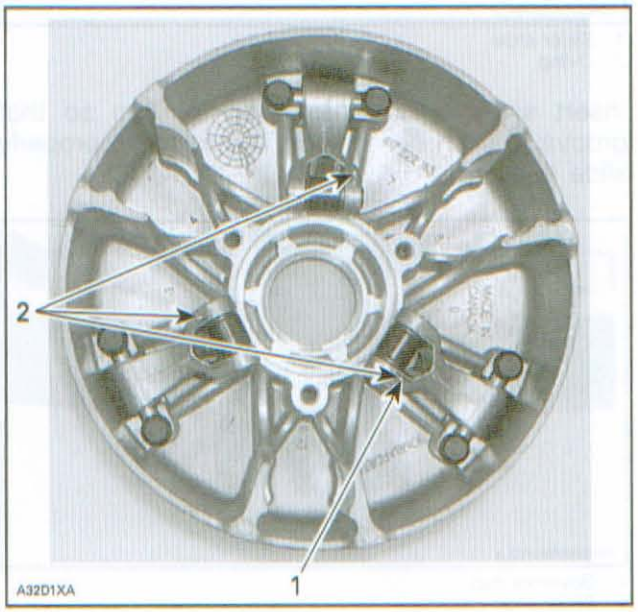

1. *Cotter pin head on top*
2. *All on the same side*

Torque lever screws to 18 N•m (159 lbf•**in**).

NOTICE **Levers and rollers must move easily after installation.**

Ramp

Insert dowel tube from chamfered side.

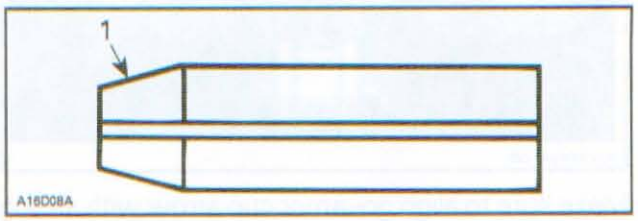

1. *Chamfered side*

Position dowel tube split at the angle "A".

www.midwestmanuals.com

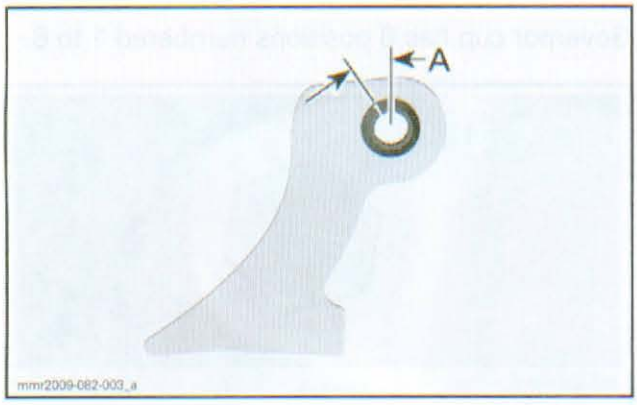

MODEL	ANGLE "A"
All	45 ± 3°

Make sure ramp is centered on dowel tube.

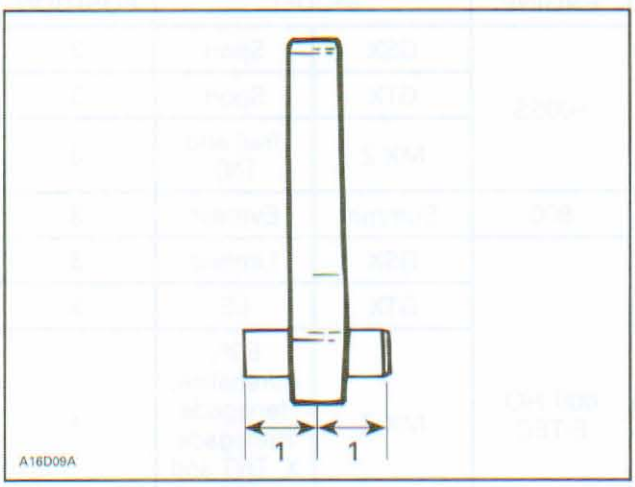

1. Equal distance

Torque ramp screws to 12 N•m (106 lbf•**in**).

Calibration Screw

When installing calibration screw, make sure to install washer as shown.

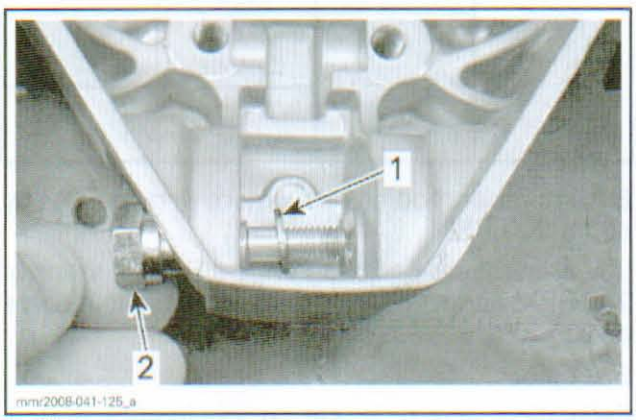

1. Washer
2. Calibration screw

NOTE: Refer to *DRIVE PULLEY ADJUSTMENT*, further in this section, to install the calibration screws in original setting.

Torque locking nut to 10 N•m (89 lbf•**in**).

Sliding Sheave and Fixed Sheave

To assemble the sliding sheave on the fixed sheave, align sliding sheave mark with the dot at the back of fixed sheave.

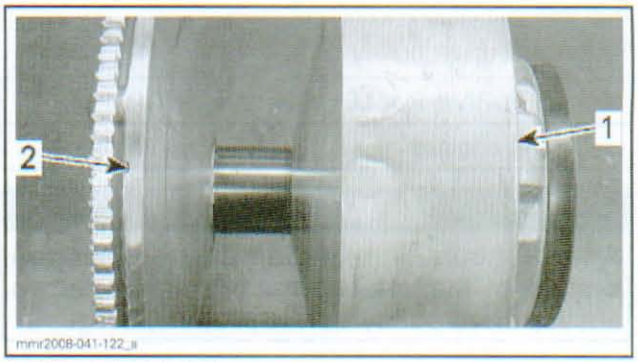

1. Sliding sheave mark
2. Fixed sheave dot

NOTE: Push sliding sheave until governor cup splines are engaged on fixed sheave splines (except 800R).

Drive Pulley Installation

Clean mounting surfaces as described in *DRIVE PULLEY CLEANING* above.

NOTICE **Do not apply antiseize or any lubricant on crankshaft and drive pulley tapers.**

Install drive pulley on crankshaft extension.

Install a **NEW** conical spring washer with its concave side towards drive pulley then install drive pulley bolt.

NOTICE **Always use BRP genuine parts for conical spring washer and bolt.**

Use the DRIVE PULLEY HOLDER (P/N 529 035 674) to retain drive pulley. See removal procedure.

Torque drive pulley bolt.

DRIVE PULLEY FIRST TORQUE	
All engines	120 N•m (89 lbf•ft)

Before starting engine, perform drive pulley adjustment, see further in this section.

Install drive belt and guard.

Raise the rear of the vehicle and support it with a mechanical stand.

www.midwestmanuals.com

⚠ WARNING

Ensure that the track is free of particles which could be thrown out while track is rotating. Keep hands, tools, feet and clothing clear of track. Ensure nobody is standing near the vehicle.

Accelerate the vehicle at low speed (maximum 32 km/h (20 MPH) and apply the brake, repeat 5 times.

Re-torque drive pulley bolt.

DRIVE PULLEY FINAL TORQUE	
All engines	120 N•m (89 lbf•ft)

⚠ WARNING

After 10 hours of operation the transmission system of the vehicle must be inspected to ensure drive pulley bolt is properly torqued.

Drive Pulley Adjustment

The drive pulley is factory calibrated to transmit maximum engine power at a predefined RPM. Factors such as ambient temperature, altitude or surface condition may vary this critical engine RPM thus affecting snowmobile efficiency.

This adjustable drive pulley allows setting maximum engine RPM in the vehicle to maintain maximum power. Refer to *ENGINE MANAGEMENT SYSTEM* for engine RPM adjustment.

Calibration screws should be adjusted so that actual maximum engine RPM in vehicle matches the maximum horsepower RPM given in *TECHNICAL SPECIFICATIONS*.

NOTE: The adjustment has an effect on high RPM only.

To adjust, modify ramp end position by turning calibration screws.

Calibration screw has a notch on top of its head.

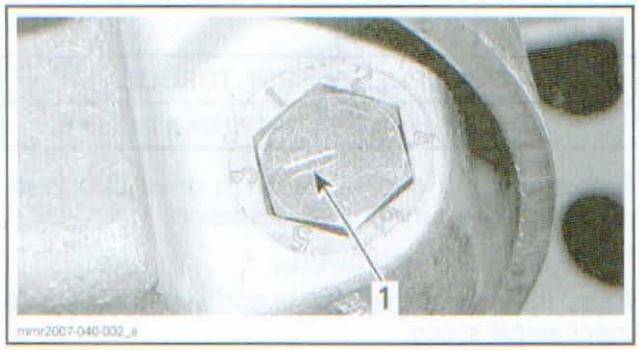

1. Notch

Governor cup has 6 positions numbered 1 to 6.

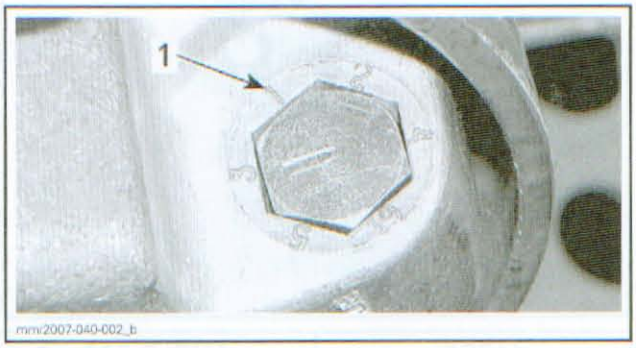

1. Position 1

See the following table for original setting.

CALIBRATION SCREW			
ENGINE	MODEL		POSITION
500SS	GSX	Sport	3
	GTX	Sport	3
	MX Z	Trail and TNT	3
600	Summit	Everest	3
600 HO E-TEC	GSX	Limited	3
	GTX	LE	3
	MX Z	50th, Adrenaline, Renegade, Renegade X, TNT and X	3
	Summit	Everest and X	3
800R	MX Z	Adrenaline, Renegade, Renegade X and X	3
	Summit	X 154" (Europe)	3
		All other models	1

Each number modifies maximum engine RPM by about 200 RPM.

Lower numbers decrease engine RPM in steps of 200 RPM and higher numbers increase it in steps of 200 RPM.

Example:

Calibration screw is set at position 3 and is changed to position 5. So maximum engine RPM is increased by about 400 RPM.

www.midwestmanuals.com

To Adjust:

Just loosen locking nut enough to pull calibration screw **partially** out. Do not completely remove the locking nut.

NOTICE Do not completely remove calibration screw otherwise its inside washer will fall off.

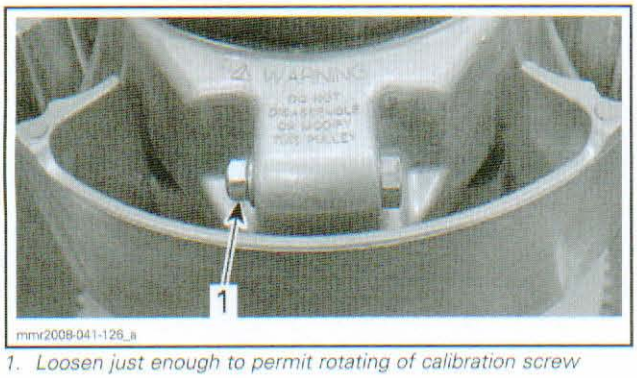

1. Loosen just enough to permit rotating of calibration screw

Adjust to desired position.

NOTICE Always adjust all 3 calibration screws and make sure they are all set at the same number.

Torque locking nuts to 10 N•m (89 lbf•**in**).

www.midwestmanuals.com

www.midwestmanuals.com

DRIVEN PULLEY AND COUNTERSHAFT

SERVICE TOOLS

Description	Part Number	Page
COUNTERSHAFT BEARING INSTALLER	529 036 066	459
COUNTERSHAFT BEARING REMOVER	529 036 065	458
COUNTERSHAFT SUPPORT	529 036 067	458
DRIVEN SPRING COMPRESSOR	529 036 064	453
QRS HUB TORQUING TOOL	529 036 147	453, 458
UPPER GEAR RETAINING TOOL	529 036 110	452

SERVICE TOOLS – OTHER SUPPLIER

Description	Part Number	Page
ROTOR CLIP® APPLICATOR	A-150	456

SERVICE PRODUCTS

Description	Part Number	Page
LOCTITE 243 (BLUE)	293 800 060	458
LOCTITE 609	413 703 100	459
LOCTITE 767 (ANTISEIZE LUBRICANT)	293 800 070	457
LOCTITE PRIMER N	293 800 041	458
PULLEY FLANGE CLEANER	413 711 809	456, 459

www.midwestmanuals.com

DRIVEN PULLEY (RING TYPE ADJUSTER)

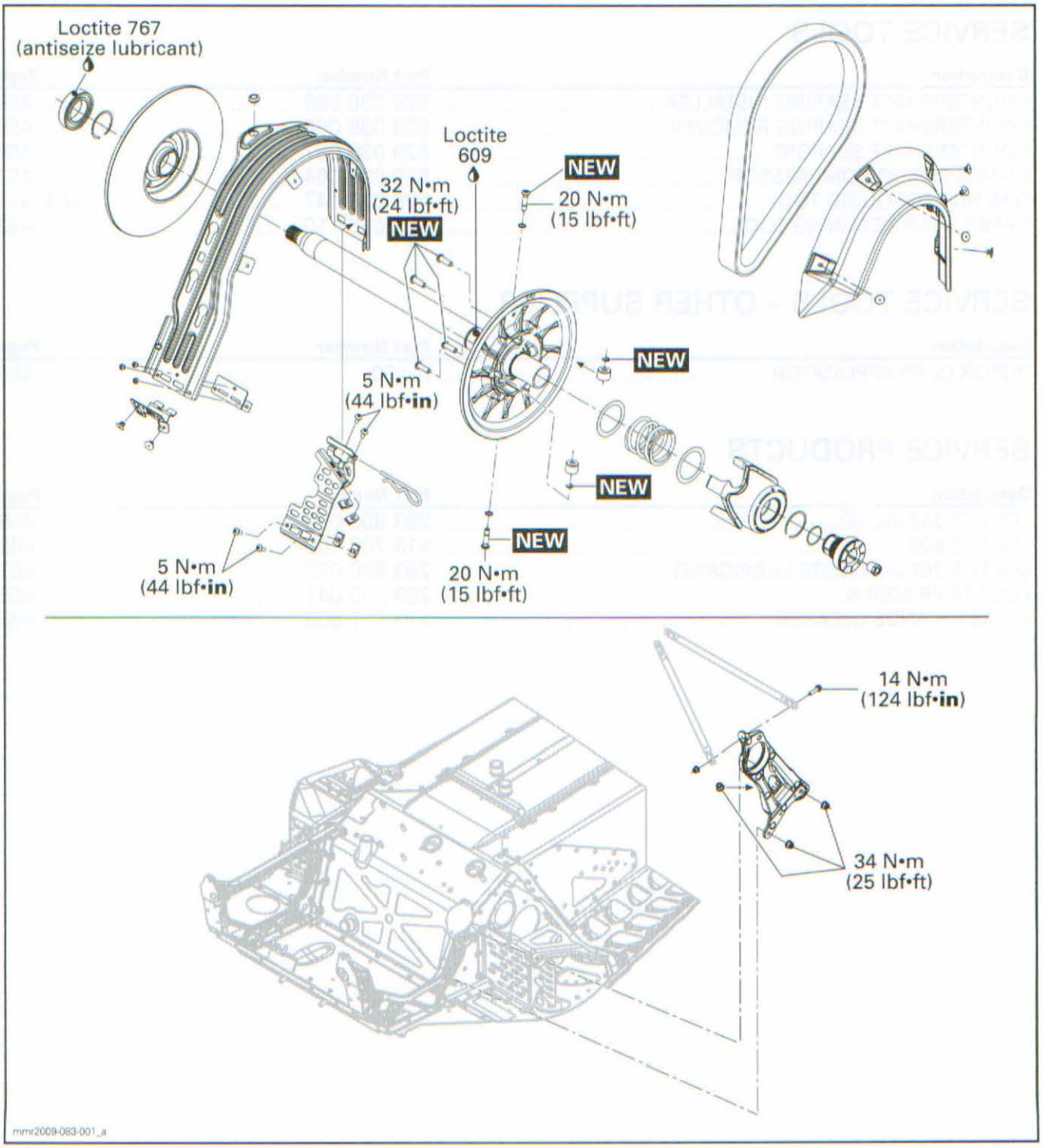

www.midwestmanuals.com

DRIVEN PULLEY (SCREW TYPE ADJUSTER)

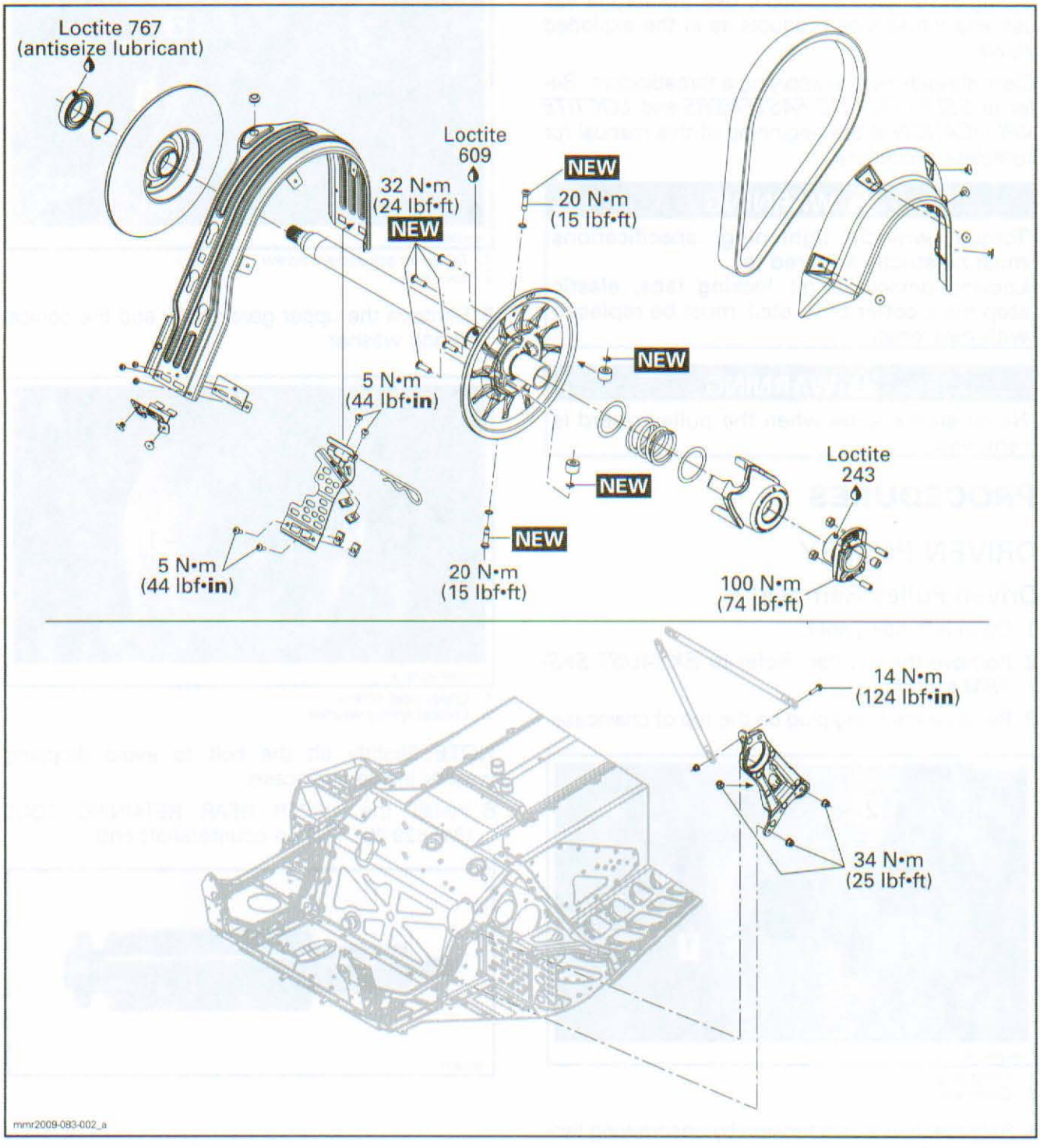

www.midwestmanuals.com

GENERAL

During assembly/installation, use the torque values and the service products as in the exploded views.

Clean threads before applying a threadlocker. Refer to *SELF-LOCKING FASTENERS* and *LOCTITE APPLICATION* at the beginning of this manual for complete procedure.

⚠ WARNING

Torque wrench tightening specifications must be strictly adhered to.
Locking devices (e.g.: locking tabs, elastic stop nuts, cotter pins, etc.) must be replaced with new ones.

⚠ WARNING

Never start engine when the pulley guard is removed.

PROCEDURES

DRIVEN PULLEY

Driven Pulley Removal

1. Open left side panel.
2. Remove the muffler. Refer to *EXHAUST SYSTEM* section.
3. Remove the filling plug on the top of chaincase.

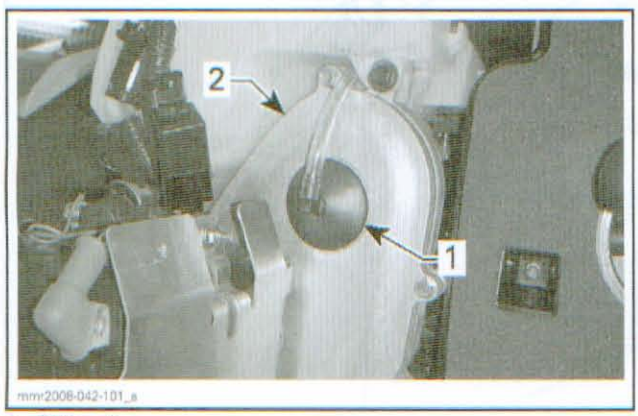

1. *Filling plug*
2. *Chaincase*

4. Release drive chain tension by unscrewing tensioner adjustment screw.

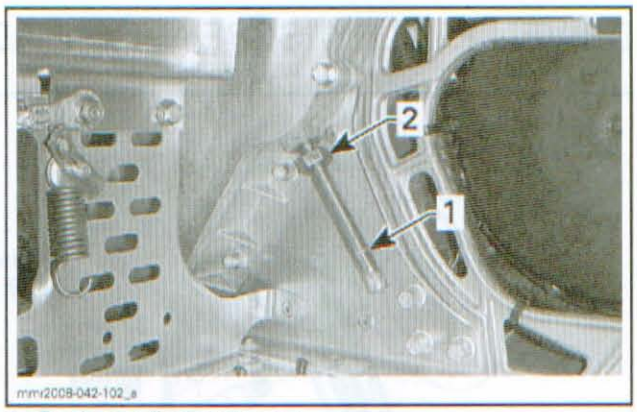

1. *Tensioner adjustment screw*
2. *Lock nut*

5. Remove the upper gear screw and the conical spring washer.

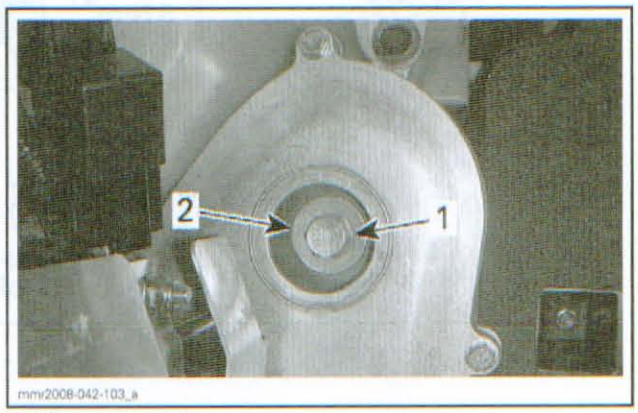

1. *Upper gear screw*
2. *Conical spring washer*

NOTE: Slightly tilt the bolt to avoid dropping washer inside chaincase.

6. Install the UPPER GEAR RETAINING TOOL (P/N 529 036 110) on countershaft end.

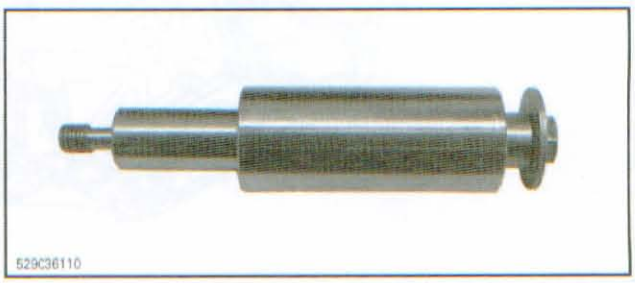

www.midwestmanuals.com

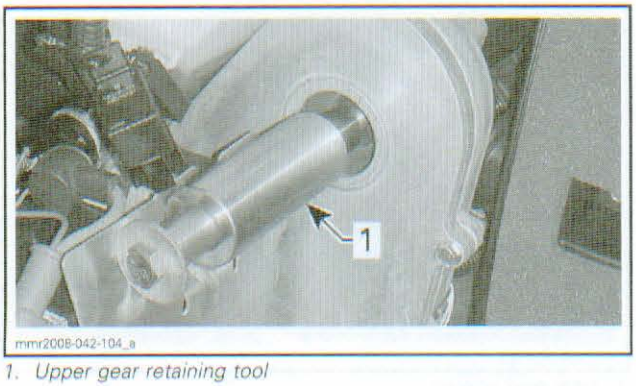

1. Upper gear retaining tool

7. Open right side panel.
8. Remove the drive belt. Refer to *DRIVE BELT* section.
9. Behind driven pulley, remove screw securing the countershaft bearing flange.

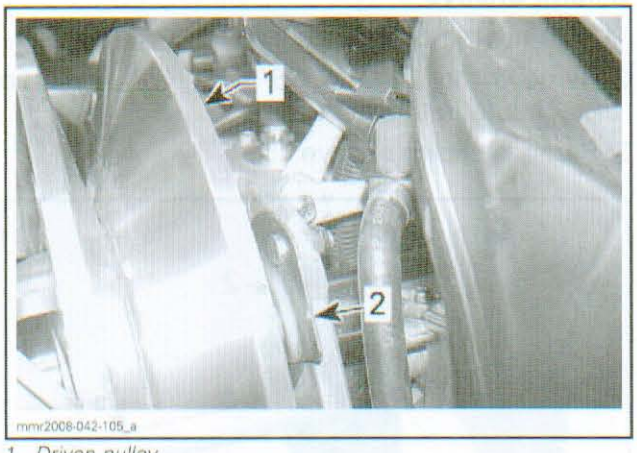

1. Driven pulley
2. Countershaft bearing flange

10. Pull the driven pulley to disengage countershaft and upper gear.

NOTE: If necessary, tap the upper gear retaining tool with a plastic hammer.

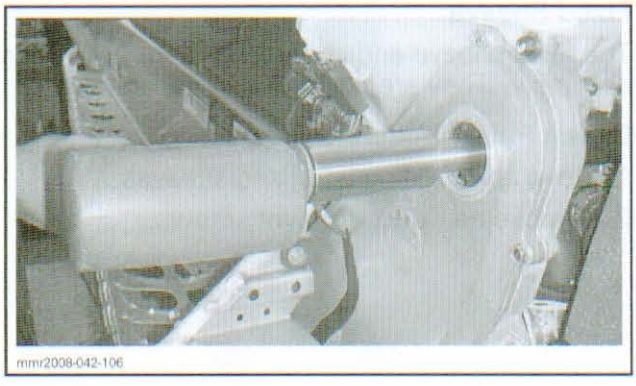

11. Unscrew countershaft from the upper gear retaining tool. Do not remove tool.

NOTE: While countershaft is removed from vehicle, the upper gear retaining tool keeps the drive chain and the upper gear in position inside chaincase.

Driven Pulley Disassembly

Cam and Spring

1. Unscrew and remove the following parts according to pulley adjuster type.

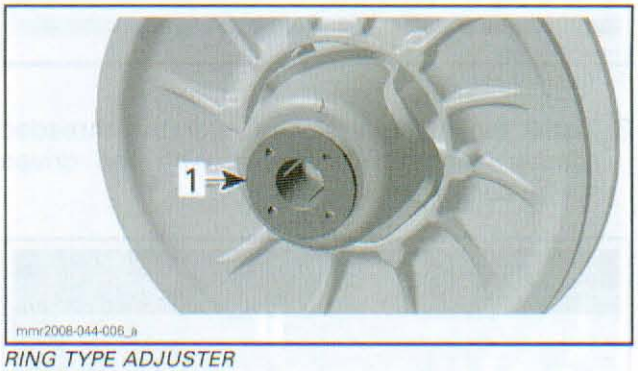

RING TYPE ADJUSTER
1. Adjusting ring

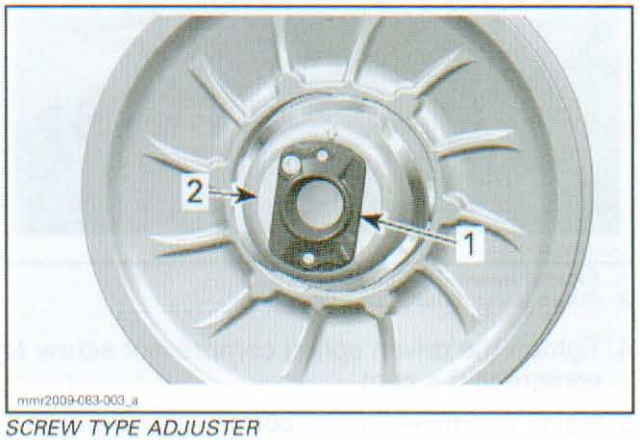

SCREW TYPE ADJUSTER
1. Adjuster hub
2. Washer

NOTE: To remove the screw type adjuster, use the QRS HUB TORQUING TOOL (P/N 529 036 147).

2. Install the threaded adapter of the DRIVEN SPRING COMPRESSOR (P/N 529 036 064) at the end of driven pulley.

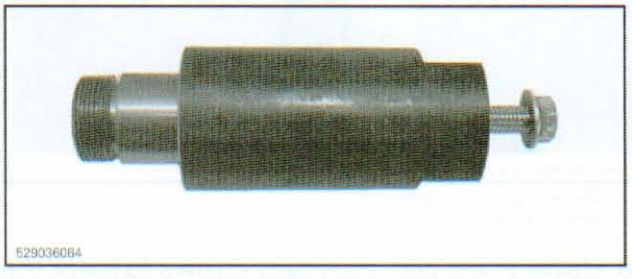

www.midwestmanuals.com

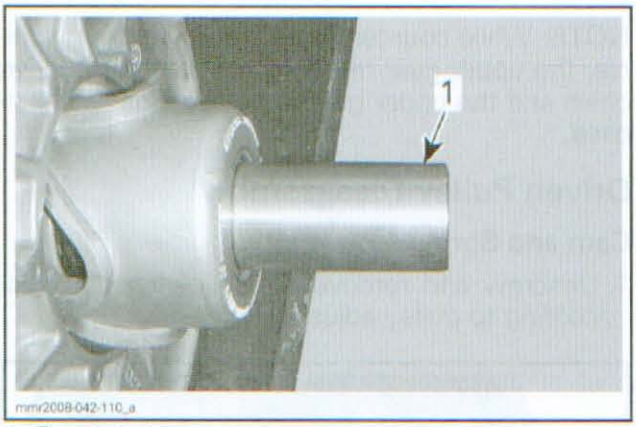

1. Threaded adapter

3. Install the external sleeve over the threaded adapter and secure sleeve with the driven spring compressor screw.

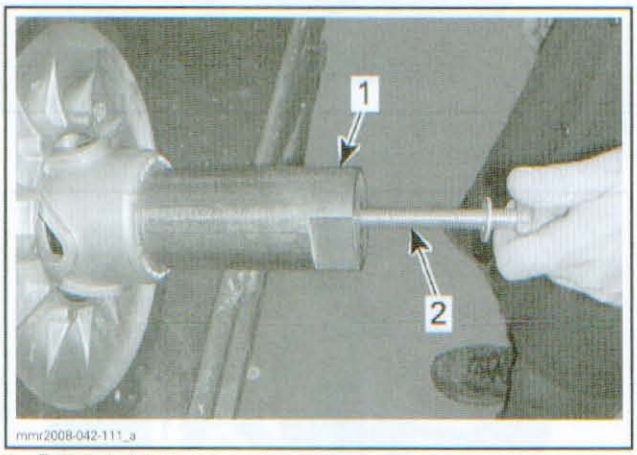

1. External sleeve
2. Driven spring compressor screw

4. Tighten the driven spring compressor screw to compress the cam.
5. Install the driven spring compressor in a vice.

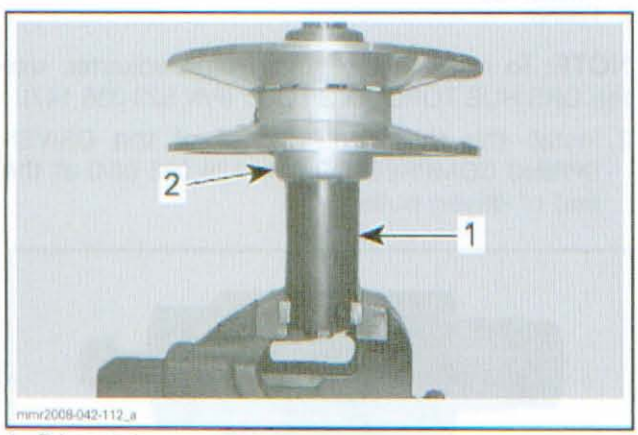

1. Driven spring compressor
2. Driven pulley

6. Using a heat gun, heat cam screws to break the thread locker.

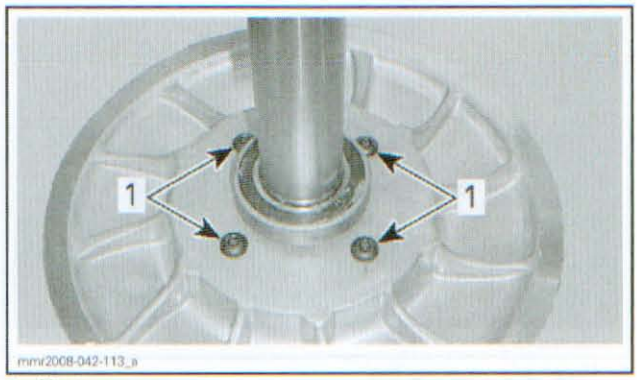

1. Heat cam screws

7. Remove and discard cam screws.
8. Unscrew the driven spring compressor screw completely.
9. Remove cam and spring.

Sliding Sheave

1. Remove the cam and spring.
2. Remove the *COUNTERSHAFT BEARING*, see procedure in this section.
3. Remove sliding sheave.

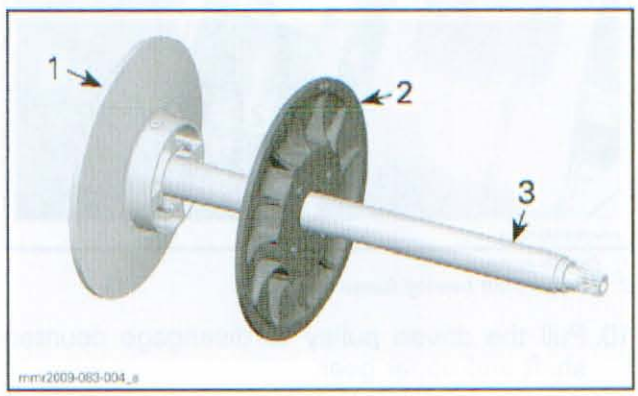

1. Fixed sheave
2. Sliding sheave
3. Countershaft

Fixed Sheave

The fixed sheave and countershaft are sold as an assembly. They are not available separately.

Driven Pulley Rollers

1. Move apart sliding and fixed sheaves.
2. Remove and **discard** pivot screws.

www.midwestmanuals.com



1. Pivot screw
2. Sliding sheave
3. Fixed sheave

3. Remove rollers.
4. Discard E-clips.

Driven Pulley Inspection

Cam and Spring

1. Verify contact surfaces of cam for visible damages. Replace cam if necessary.
2. Using a dial bore gauge, measure the inner diameter of cam bushing. Measuring point must be at least 5 mm (1/4 in) from bushing edge.

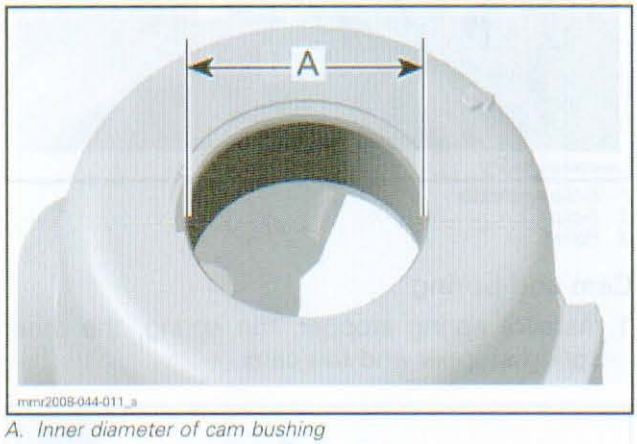

A. Inner diameter of cam bushing

BUSHING	SERVICE LIMIT
Cam bushing	41.5 mm (1.634 in)

3. Replace the cam if the inner diameter of bushing is out of specification.

Sliding Sheave

1. Inspect pulley sheave for marks or scratches.
2. Using a dial bore gauge, measure the inner diameter of sliding sheave bushing. Measuring point must be at least 5 mm (1/4 in) from bushing edge.



A. Inner diameter of sliding sheave bushing

BUSHING	SERVICE LIMIT
Sliding sheave bushing	41.5 mm (1.634 in)

3. Replace the sliding sheave if the inner diameter of bushing is out of specification.

Fixed Sheave

Replace fixed sheave and countershaft if one of the following problem is detected:

- Marks or scratches on pulley sheave
- Bent, twisted or otherwise damaged countershaft
- Defective splines and threads at the end of countershaft.

Driven Pulley Rollers

1. Check the rollers for flat spots, cracks or other visible damages. Replace if necessary.
2. Measure inner and outer diameter of rollers.

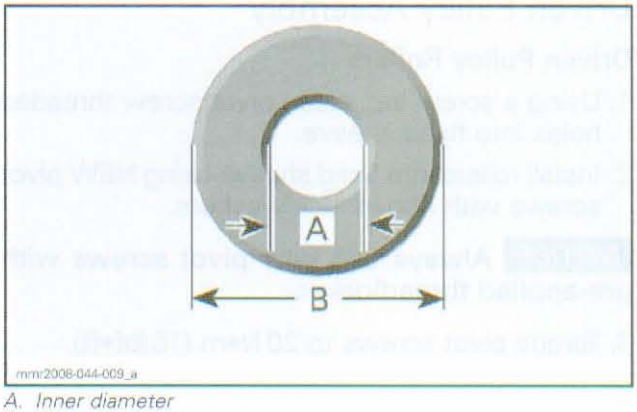

A. Inner diameter
B. Outer diameter

ROLLER DIAMETER	SERVICE LIMIT
Inner diameter	8.5 mm (.335 in)
Outer diameter	21.5 mm (.846 in)

3. Measure the roller thickness.

www.midwestmanuals.com

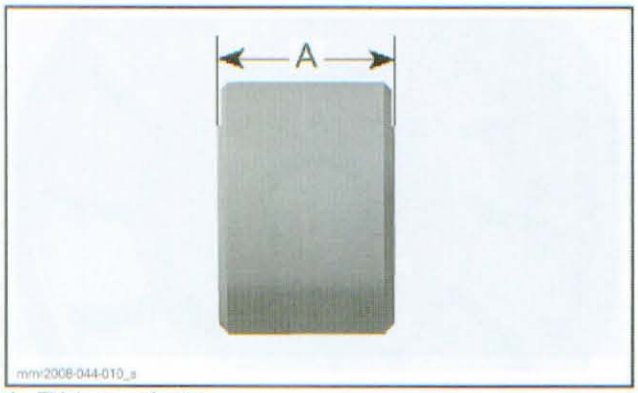

A. Thickness of roller

ROLLER THICKNESS	
SERVICE LIMIT	14.75 mm (.581 in)

4. If a roller is out of specifications, replace both rollers at the same time.

Driven Pulley Cleaning

Use the PULLEY FLANGE CLEANER (P/N 413 711 809) and a clean rag to clean pulley sheaves.

Cam and Spring

During break-in period, teflon from bushing moves to cam or countershaft surface. A teflon over teflon running condition occurs, leading to low friction. So it is normal to see gray teflon deposit on cam or countershaft. Do not remove this deposit.

When a dust deposit has to be removed from the cam or the countershaft, use dry cloth to avoid removing transferred teflon.

Driven Pulley Assembly

Driven Pulley Rollers

1. Using a screw tap, clean pivot screw threaded holes into fixed sheave.
2. Install rollers into fixed sheave using NEW pivot screws with ribbed lock washers.

NOTICE **Always use new pivot screws with pre-applied threadlocker.**

3. Torque pivot screws to 20 N•m (15 lbf•ft).

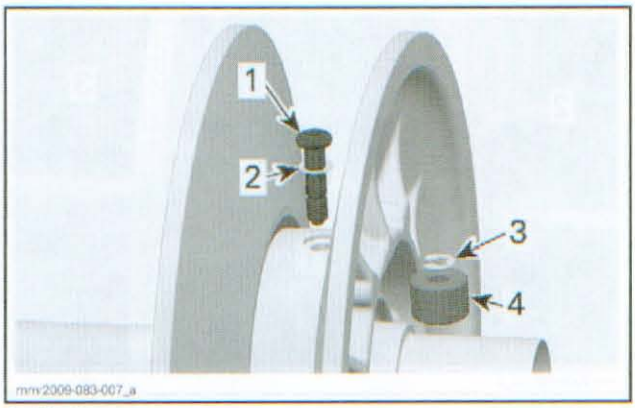

1. *Pivot screw*
2. *Ribbed lock washer*
3. *E-clip*
4. *Roller*

4. Using a ROTOR CLIP® APPLICATOR (P/N A-150), install **NEW** E-clips to lock pivot screws.

NOTE: To purchase an applicator, contact Rotor Clip Company at www.rotorclip.com.

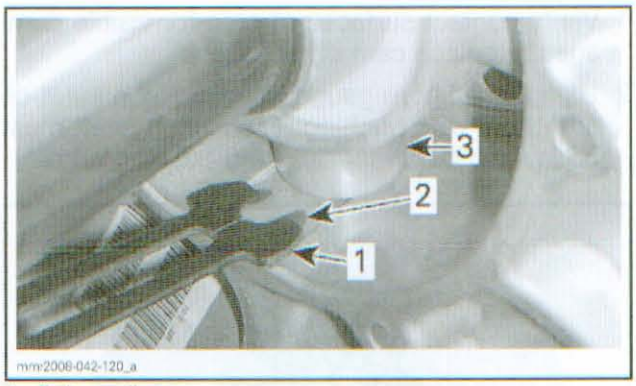

1. *E-clip applicator*
2. *E-clip*
3. *Roller*

Cam and Spring

1. Install a spring stopper, the spring, the other spring stopper and the cam.

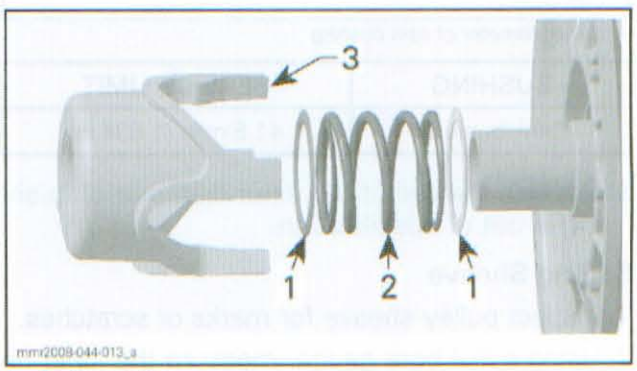

1. *Spring stopper*
2. *Spring*
3. *Cam*

Rotor Clip® is a trademark of Rotor Clip Company, Inc.

www.midwestmanuals.com

2. Align the arrow on cam with the arrow on fixed sheave. At the end of cam installation, the arrow on the cam should be move clockwise (± 30°).

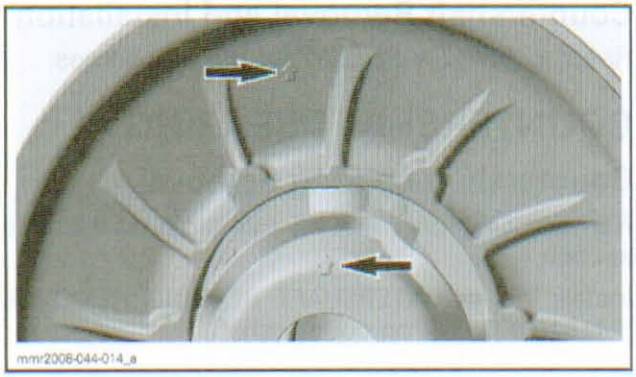

3. Install the driven spring compressor sleeve and tighten the driven spring compressor screw until cam is completely pressed against sliding sheave.
4. Behind sliding sheave, install 4 **NEW** cam screws.
5. Torque cam screws to 32 N•m (24 lbf•ft).
6. Remove the driven spring compressor.

Sliding Sheave

The assembly of sliding sheave is the reverse of the disassembly. However, pay attention to the following.

When installing sliding sheave, make sure to align its arrow with the arrow on cam.

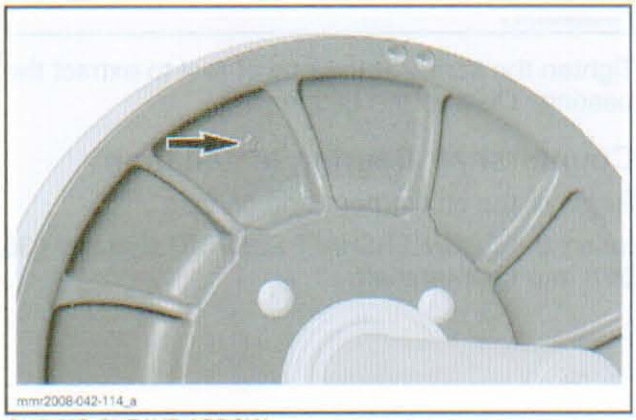

SLIDING SHEAVE ARROW



CAM ARROW

Driven Pulley Installation

1. Using sand paper (600-grit or 1000-grit) or steel wool, remove any rust on bearing shoulder of countershaft bearing support.

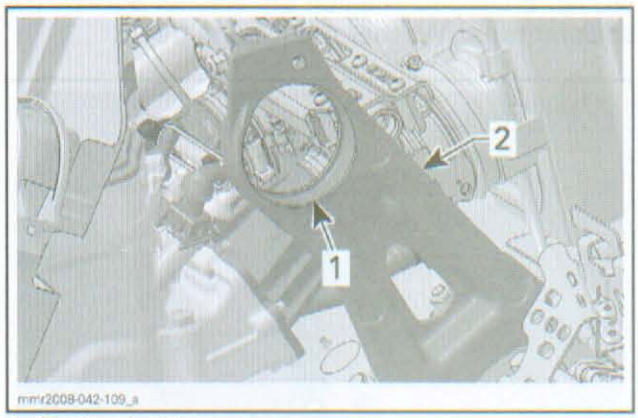

1. Bearing shoulder
2. Countershaft bearing support

2. Apply a thin layer of LOCTITE 767 (ANTISEIZE LUBRICANT) (P/N 293 800 070) on bearing shoulder.
3. Insert countershaft through countershaft bearing support.
4. Fasten the end of countershaft to upper gear retaining tool.
5. Align countershaft splines with upper gear splines.
6. Using the upper gear retaining tool as a puller, install countershaft into upper gear. Ensure countershaft bearing is installed properly into countershaft bearing support.
7. Remove the upper gear retaining tool.
8. Install the upper gear screw and the conical spring washer.

NOTE: The conical spring washer must be installed with its concave side towards upper gear.

9. Tighten upper gear screw to 48 N•m (35 lbf•ft).
10. Install filling plug.

www.midwestmanuals.com

11. On LH side, install the bearing flange.
12. Tighten nut to 15 N•m (133 lbf•**in**).

Driven Pulley with Ring Type Adjuster

1. Install the adjuster into the countershaft end and fully tight it.
2. Install and adjust belt drive. Refer to *BELT DRIVE* section.
3. Install all other removed parts.

Driven Pulley with Screw Type Adjuster

1. First, apply LOCTITE PRIMER N (P/N 293 800 041) then LOCTITE 243 (BLUE) (P/N 293 800 060) on threads of adjuster hub.
2. Install the adjuster hub with its washer into the countershaft end and fully tight it.

NOTE: Ensure to position the washer against the adjuster nuts. Washer must turns freely.



1. Adjuster hub
2. Washer against adjuster nuts

3. Using the QRS HUB TORQUING TOOL (P/N 529 036 147), torque adjuster hub to 100 N•m (74 lbf•ft).

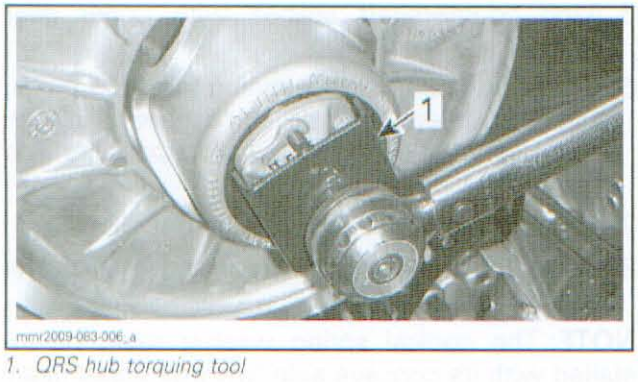

1. QRS hub torquing tool

4. Install and adjust belt drive. Refer to *BELT DRIVE* section.
5. Install all other removed parts.

COUNTERSHAFT

The countershaft and the fixed sheave are sold as an assembly. They are not available separately.

Countershaft Removal and Installation

Refer to *DRIVEN PULLEY* for the procedures.

COUNTERSHAFT BEARING

Countershaft Bearing Removal

Remove *DRIVEN PULLEY*, see procedure in this section.

Install the COUNTERSHAFT BEARING REMOVER (P/N 529 036 065) on countershaft.

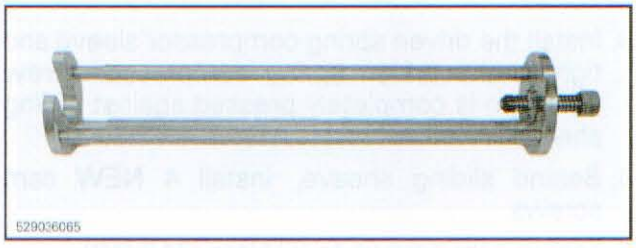

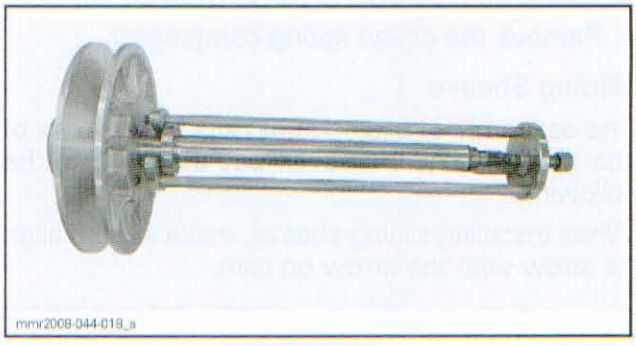

Tighten the screw at the end of tool to extract the bearing. Discard the bearing.

Countershaft Bearing Installation

Remove the adjustment ring on cam.

Insert the COUNTERSHAFT SUPPORT (P/N 529 036 067) into countershaft.

www.midwestmanuals.com

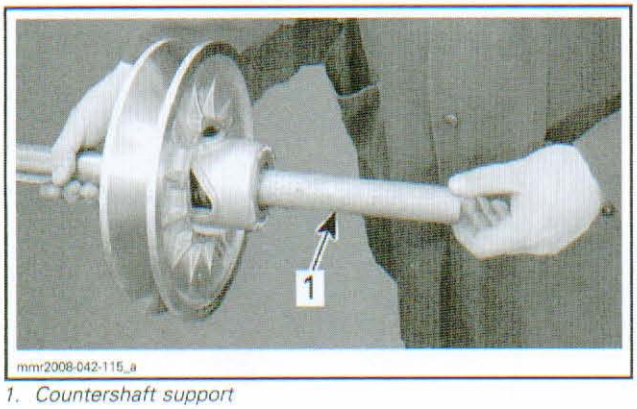

1. Countershaft support

NOTICE **The countershaft support is mandatory to avoid damaging the countershaft threaded end and the cam during bearing installation.**

Using PULLEY FLANGE CLEANER (P/N 413 711 809), clean residues on countershaft bearing surface.

Check countershaft bearing surface for wear.

Apply LOCTITE 609 (P/N 413 703 100) on countershaft bearing surface.

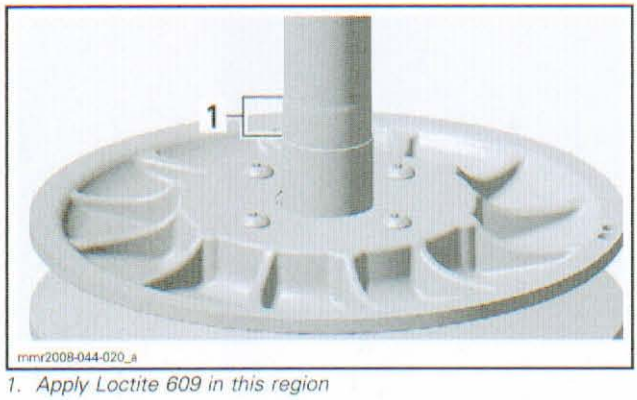

1. Apply Loctite 609 in this region

Using a press and the COUNTERSHAFT BEARING INSTALLER (P/N 529 036 066), install the NEW bearing on countershaft.

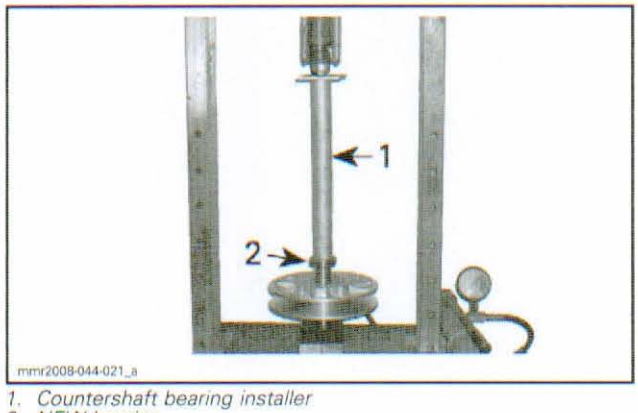

1. Countershaft bearing installer
2. NEW bearing

NOTICE **Use a press only, never tap on countershaft bearing installer with an hammer to avoid damaging bearing and countershaft.**

Clean the surplus of Loctite with a rag to avoid having Loctite on sliding sheave bushing.

COUNTERSHAFT BEARING SUPPORT

Countershaft Bearing Support Removal

1. Remove *DRIVEN PULLEY*, see procedure in this section.
2. Remove nuts securing the bottom of countershaft bearing support.

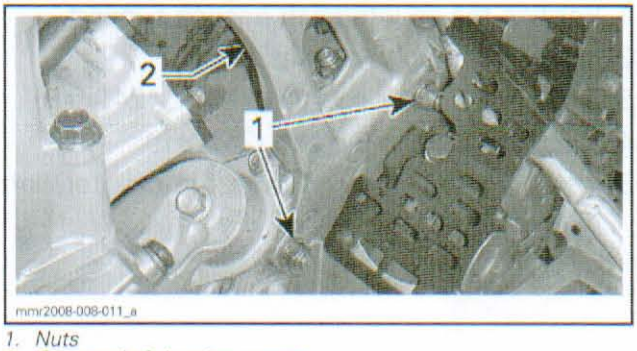

1. Nuts
2. Countershaft bearing support

3. Remove bolt retaining the top of countershaft bearing support.

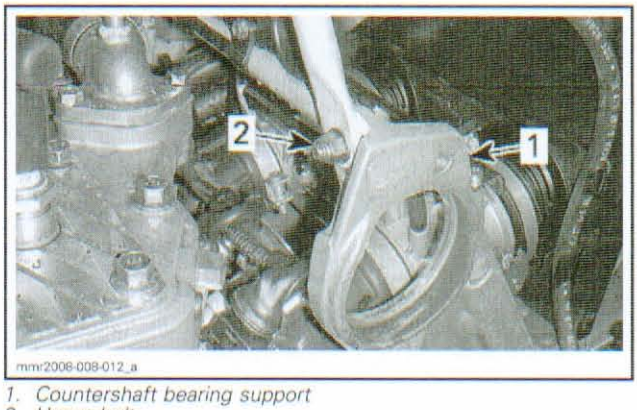

1. Countershaft bearing support
2. Upper bolt

4. Remove primary air intake silencer.
5. Loosen lower nut located behind support.

www.midwestmanuals.com

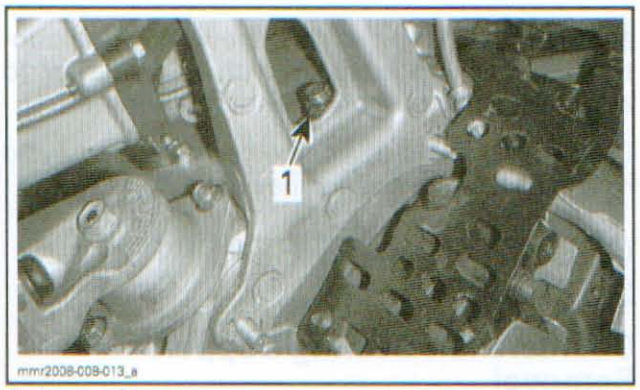

1. Loosen this nut

6. Remove the countershaft bearing support.

Countershaft Bearing Support Installation

1. Position the countershaft bearing support.
2. Install upper bolt and nuts loosely.
3. Tighten the upper bolt to 14 N•m (124 lbf•**in**).
4. Torque all nuts to 34 N•m (25 lbf•ft).
5. Install the driven pulley with the countershaft then all other removed parts.

www.midwestmanuals.com

BRAKE

SERVICE TOOLS

Description	Part Number	Page
CALIPER PULLER	529 036 145	467
PROTECTIVE CAP	529 036 150	467

SERVICE PRODUCTS

Description	Part Number	Page
DOT 4 BRAKE FLUID GTLMA	293 600 062	463
LOCTITE 767 (ANTISEIZE LUBRICANT)	293 800 070	468

www.midwestmanuals.com

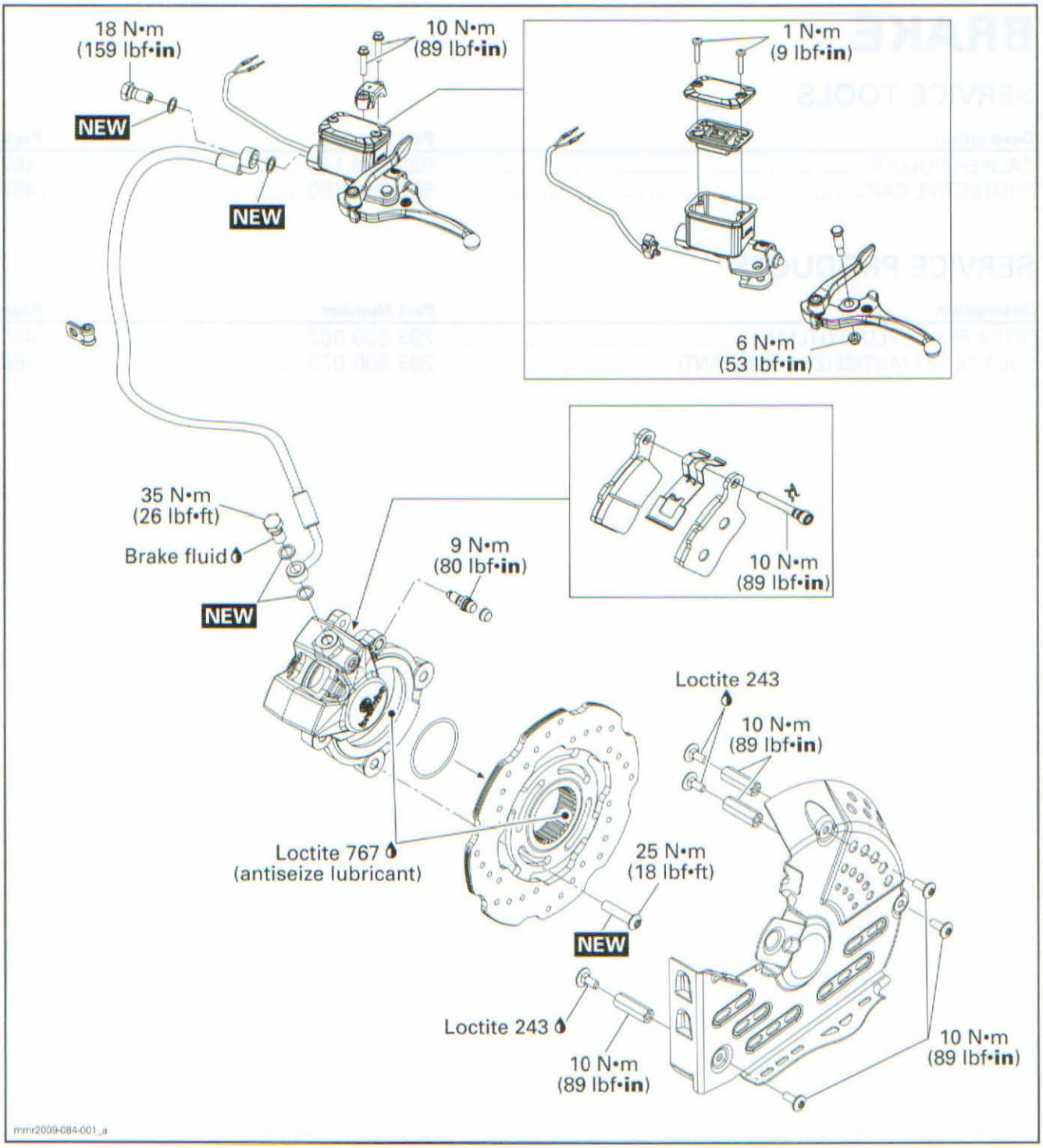

www.midwestmanuals.com

GENERAL

During assembly/installation, use torque values and service products as in the exploded view.

Clean threads before applying a threadlocker. Refer to *SELF-LOCKING FASTENERS* and *LOCTITE APPLICATION* at the beginning of this manual for complete procedure.

⚠ WARNING

Torque wrench tightening specifications must be strictly adhered to.
Locking devices (e.g.: locking tabs, elastic stop nuts, cotter pins, etc.) must be replaced with new ones.

Hoses or cables removed or disconnected must be installed and routed at the same place.

NOTICE Locking ties removed during a procedure must be replaced and installed at the same location.

⚠ WARNING

Never apply anything to brake fittings, The use of threads sealant or Teflon tape could cause brake system failure. Severe injury or death can occur.

⚠ WARNING

A contaminated brake disc or pad reduces stopping power. Discard contaminated pads and clean contaminated disc with a high quality brake degreasing agent.

NOTICE Avoid spilling brake fluid on plastic, rubber or painted parts. Protect these parts with a rag when servicing brake system.

NOTICE Wipe up any brake fluid spillage.

NOTICE To avoid serious damage to the brake system, use only DOT 4 brake fluid from a sealed container. Do not use brake fluid taken from old or already opened containers, nor mix different fluids for topping off.

NOTICE Sealing washers must be discarded and replaced with NEW ones every time a Banjo fitting is unscrewed.

Dispose brake fluid as per your local environmental regulation.

MAINTENANCE

BRAKE FLUID

The brake fluid must be changed in accordance with the maintenance chart.

Recommended Brake Fluid

Always use brake fluid meeting the specification DOT 4 such as DOT 4 BRAKE FLUID GTLMA (P/N 293 600 062).

Brake Fluid Level Verification

With the vehicle on a level surface, position steering in straight-ahead position to ensure reservoir is level.

Brake fluid must always be above the MIN. line when brake lever is squeezed.

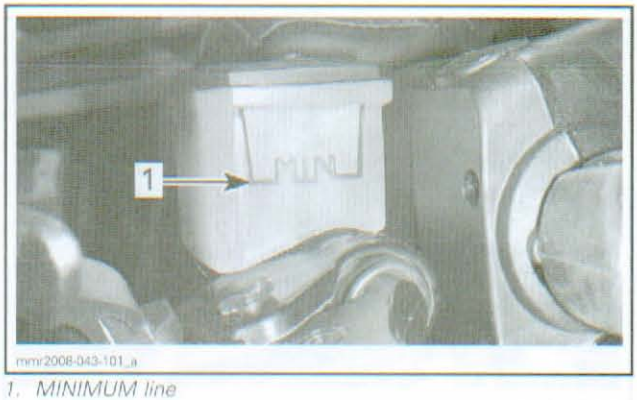

1. MINIMUM line

Add fluid as required. Do not overfill.

NOTE: A low level may indicate leaks or worn brake pads.

Brake Fluid Replacement

Draining

1. Place vehicle on a level surface.
2. Remove reservoir cover with its diaphragm.

www.midwestmanuals.com

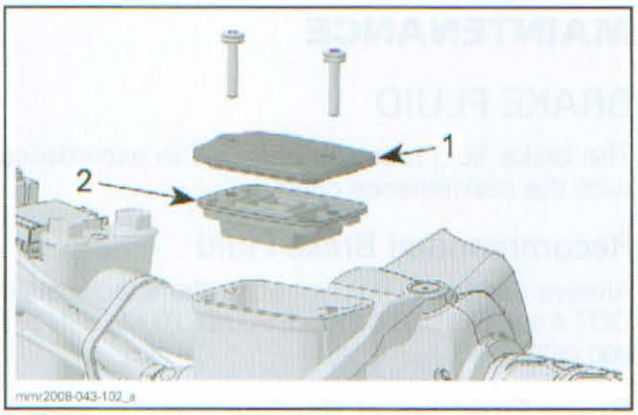

1. Reservoir cover
2. Diaphragm

3. Connect a clear hose to caliper bleeder.
4. Place the other end of hose in a container.
5. Loosen bleeder and pump brake lever until no more fluid flows out of bleeder.

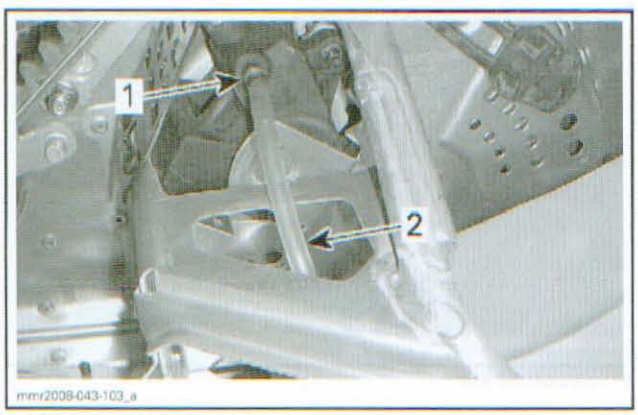

1. Bleeder
2. Clear hose to catch used brake fluid

Filling

To fill brake circuit when it is empty do the following:

1. Ensure reservoir cover is removed.
2. Using a big syringe, push brake fluid slowly into the caliper.



3. Continue to push brake fluid until reservoir is half full.
4. Close bleeder.
5. Add brake fluid into reservoir and install cover.
6. Squeeze brake lever.
   - 6.1 If brake lever is firm, it is not required to bleed brake system. Tighten bleeder to 9 N•m (80 lbf•**in**).
   - 6.2 If brake lever is spongy, bleed brake system as per following procedure.

Bleeding

1. Install a clear hose on bleeder.
2. Place the other end in a container partially filled with clean brake fluid.
3. Pump up circuit pressure with brake lever until lever resistance is felt.
4. Squeeze brake lever and open bleeder. When lever touches the handlebar, do not release lever and close bleeder.
5. Release brake lever slowly.
6. Repeat the procedure until no more air bubbles appear in hose.

NOTE: Check fluid level often to prevent air from being pumped into the circuit.

7. Install cover on reservoir.
8. Squeeze brake lever.
   - 8.1 If brake lever is firm, bleeding procedure is completed. Tighten bleeder to 9 N•m (80 lbf•**in**).
   - 8.2 If brake lever is still spongy, go to step 9.
9. Push back brake pads with caliper in place and squeeze brake lever.
10. Repeat step 2 to step 5.
11. Tighten bleeder to 9 N•m (80 lbf•**in**).
12. Install diaphragm and cover on reservoir.

PROCEDURES

BRAKE PADS

Brake Pads Inspection

1. Measure brake pad lining thickness.

SERVICE LIMIT	
Brake pad thickness	1 mm (1/32 in)

NOTICE Brake pads must always be replaced in pairs.

www.midwestmanuals.com

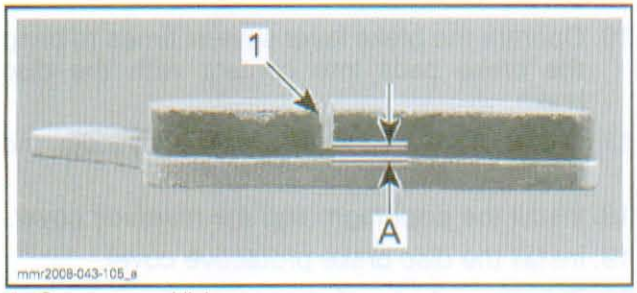

1. *Groove on pad lining*
A. *Brake pad minimum thickness 1 mm (1/32 in)*

2. Inspect brake disc at the same time.

Brake Pads Replacement

1. Place the vehicle on a level surface.
2. Cover the plastic parts under and near master cylinder in the event that brake fluid would be spilled.
3. Remove reservoir cover with its diaphragm.

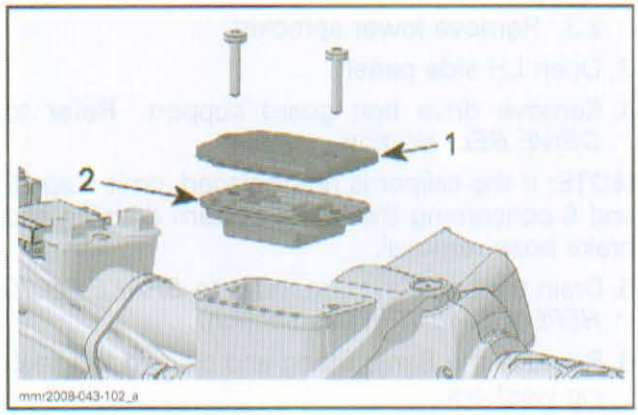

1. *Reservoir cover*
2. *Diaphragm*

4. Remove the disc brake protective cover.

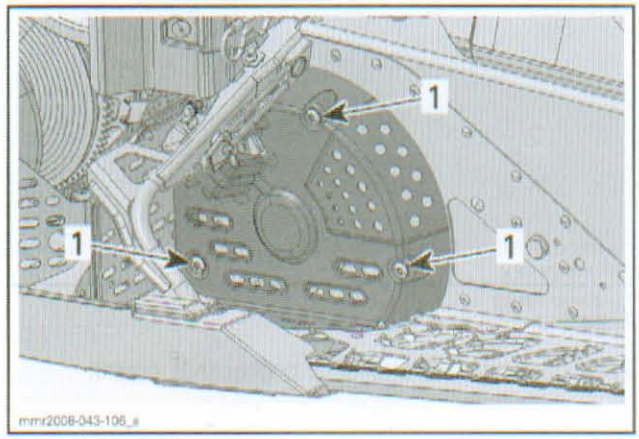

1. *Retaining screws*

5. Remove the clip securing pad pin.
6. Unscrew and remove the pad pin.

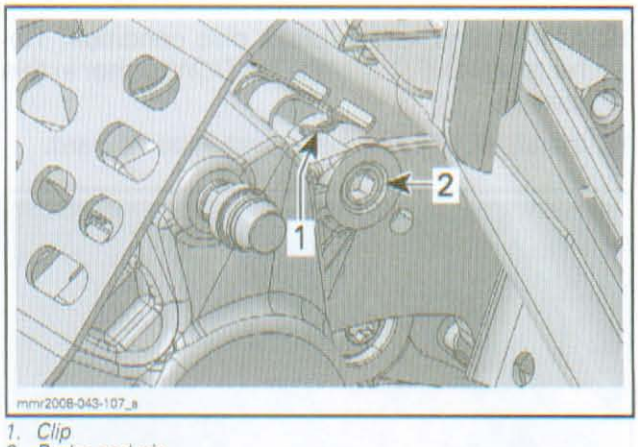

1. *Clip*
2. *Brake pad pin*

7. Using a flat screwdriver, depress pistons into their bores.

NOTICE Pay attention to avoid scratching brake disc.

8. Remove the circlip securing disc brake to drive shaft.

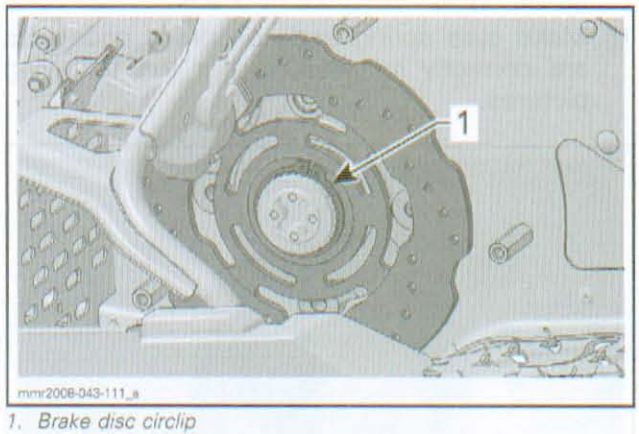

1. *Brake disc circlip*

9. Remove brake pads.
   - 9.1 Remove the external pad first.
   - 9.2 Pull the brake disc and remove the internal pad.

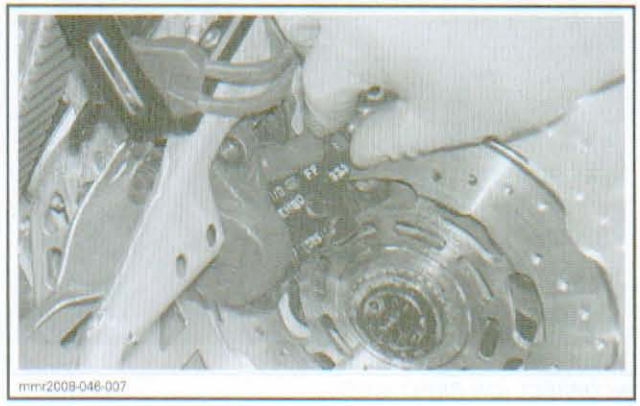

www.midwestmanuals.com

10. At this time, check brake disc condition. Refer to *BRAKE DISC INSPECTION* further in this section.
11. Install **NEW** brake pads with tabs upward.

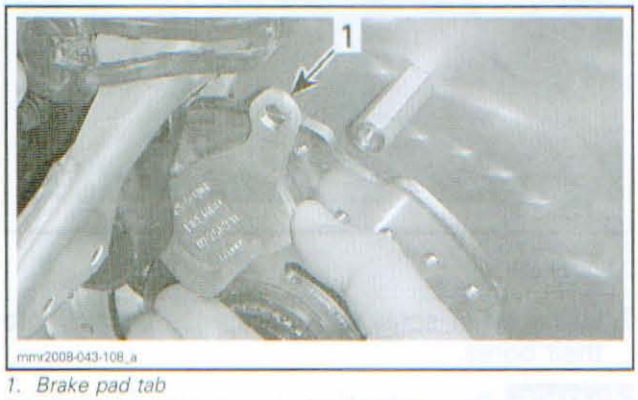

1. Brake pad tab

12. Install brake pad pin.
13. Tighten pin to 10 N•m (89 lbf•**in**).
14. Install clip on brake pad pin. If the clip seems loose, replace it with a new one.
15. Make sure spring ends on brake pads pins are correctly installed as per the following pictures.

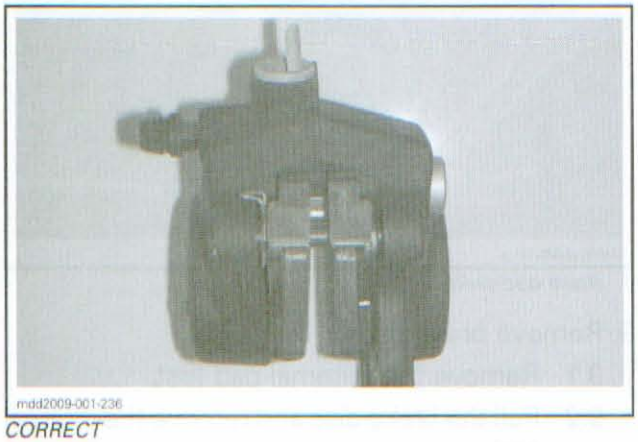

CORRECT

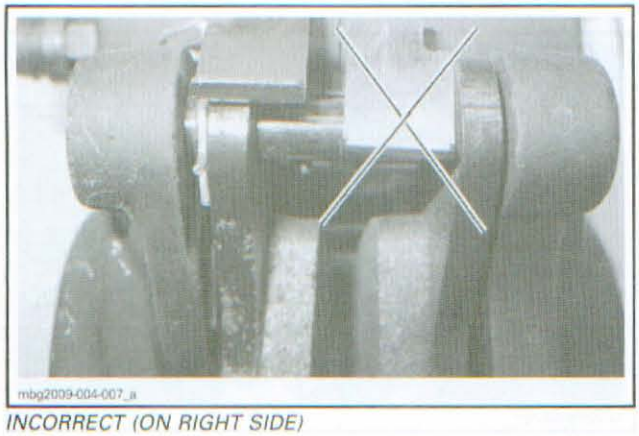

INCORRECT (ON RIGHT SIDE)

16. Operate the brake lever several times to bring the brake pads into contact with the disc brake.
17. Check brake fluid level in master cylinder and refill if necessary.
18. Install the diaphragm and the reservoir cover.
19. Install the disc brake protective cover.
20. Ride the vehicle a few minutes to make sure the repair is successful.

CALIPER

Caliper Removal

1. Open the RH side panel.
2. Refer to *CHAINCASE* section and carry the following steps.
   - 2.1 Remove chaincase cover.
   - 2.2 Loosen drive chain.
   - 2.3 Remove lower sprocket.
3. Open LH side panel.
4. Remove drive belt guard support. Refer to *DRIVE BELT* section.

NOTE: If the caliper is not replaced, omit steps 5 and 6 concerning the brake system draining and brake hose removal.

5. Drain the brake system, refer to *BRAKE FLUID REPLACEMENT* in this section.
6. Remove the Banjo fitting and discard the sealing washers.

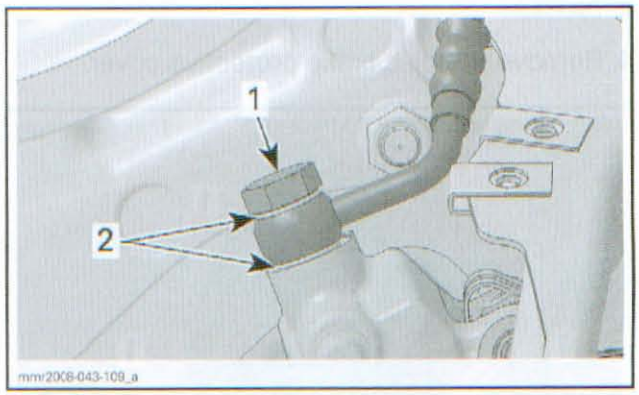

1. Banjo fitting
2. Sealing washers

7. Remove the brake disc protective cover.

www.midwestmanuals.com

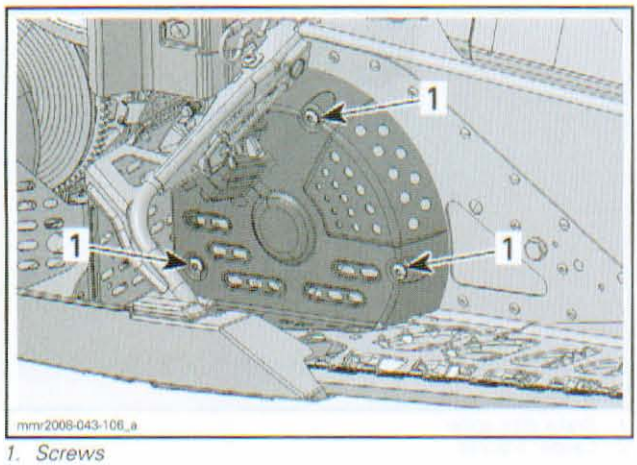

1. *Screws*

8. Lift the rear of vehicle and release track tension completely.
9. Turn driven pulley to align brake disc slots with caliper bracket screws.
10. Remove caliper screws (4) behind brake disc.

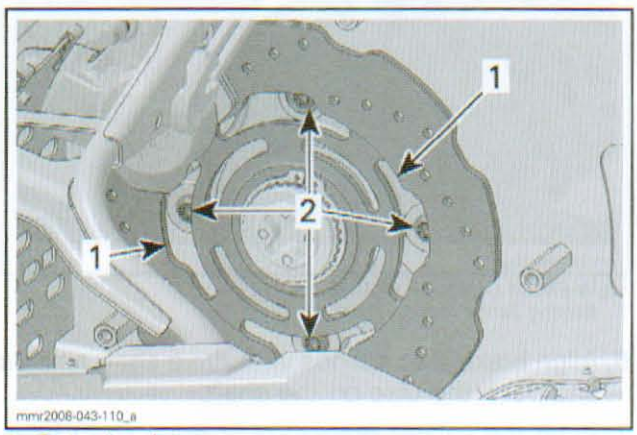

1. *Brake disc slots*
2. *Caliper screws behind brake disc*

11. Pull the drive axle assembly (brake disc, caliper and bearing) from LH side.

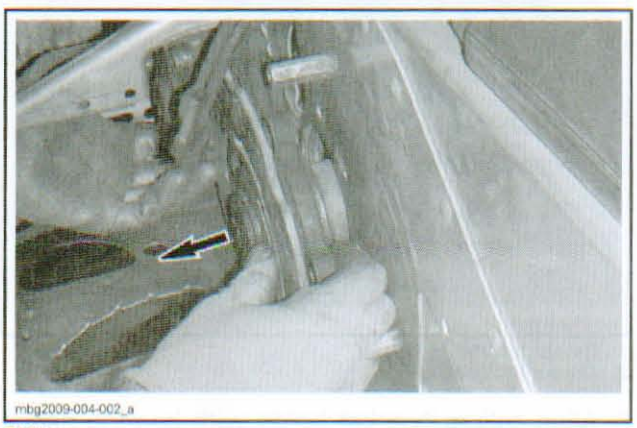

PULL

12. Remove *BRAKE PADS*, see procedure in this section.
13. Install the CALIPER PULLER (P/N 529 036 145) on the brake caliper through brake disc slots.

NOTE: Make sure puller tabs are correctly engaged on caliper.

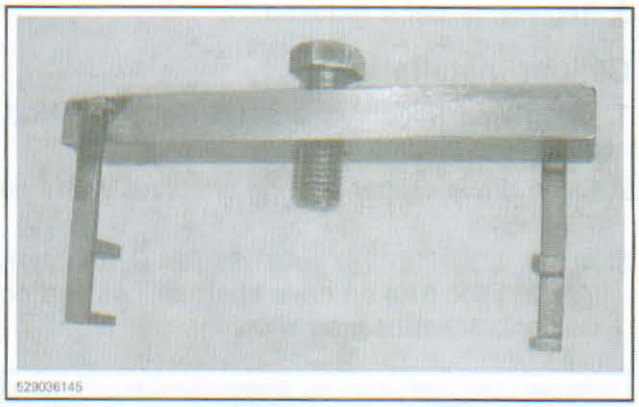

14. Install the PROTECTIVE CAP (P/N 529 036 150) between caliper puller bolt and plastic cap.

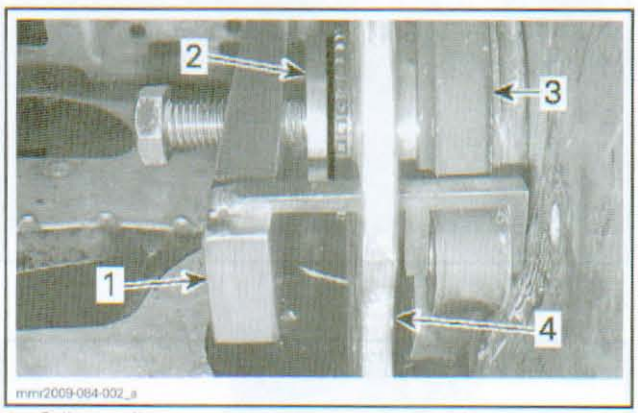

1. *Caliper puller*
2. *Protective cap*
3. *Caliper bracket*
4. *Brake disc*

15. Tighten caliper puller bolt to separate caliper from drive axle bearing.

NOTICE Never use an impact tool to operate caliper puller. The caliper or the puller could break.

16. When brake disc is out of splines, remove it.
17. Remove caliper.

NOTICE Do not let caliper hangs by the hose and do not stretch or twist the hose.

Caliper Inspection

1. Check pistons for:
   - Rust

www.midwestmanuals.com

- Scratches
- Leaks.

2. Check caliper bracket for:
   - Cracks
   - Rust on bearing shoulder (clean with a steel wood).
3. Replace caliper if required.

Caliper Installation

1. Using your fingers or a small piece of wood, push both pistons into their bores.
2. Clean brake caliper bearing shoulder with fine steel wool.
3. Apply LOCTITE 767 (ANTISEIZE LUBRICANT) (P/N 293 800 070) on drive shaft splines and on caliper bracket bearing shoulder.

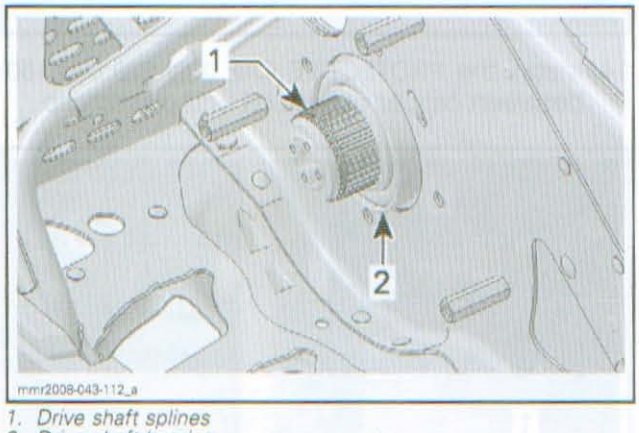

1. Drive shaft splines
2. Drive shaft bearing

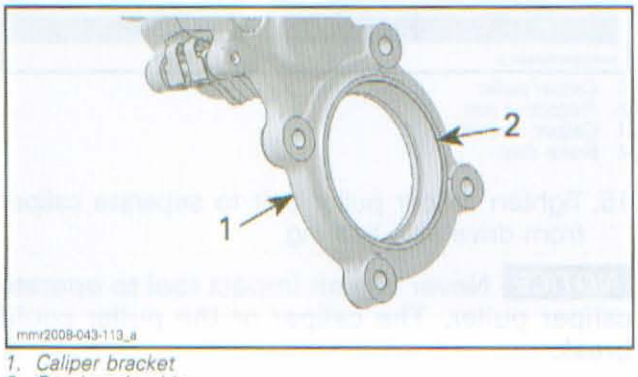

1. Caliper bracket
2. Bearing shoulder

4. Insert brake disc into caliper. The brake disc collar must be inserted into caliper bracket.

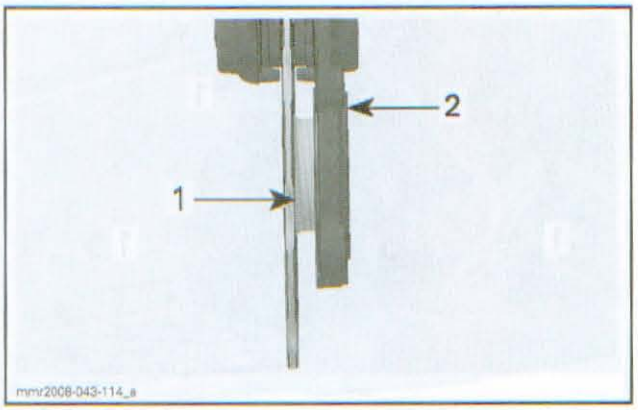

1. Brake disc collar
2. Caliper bracket

5. Ensure bearing flange is properly locked. Tabs must be properly inserted in frame.

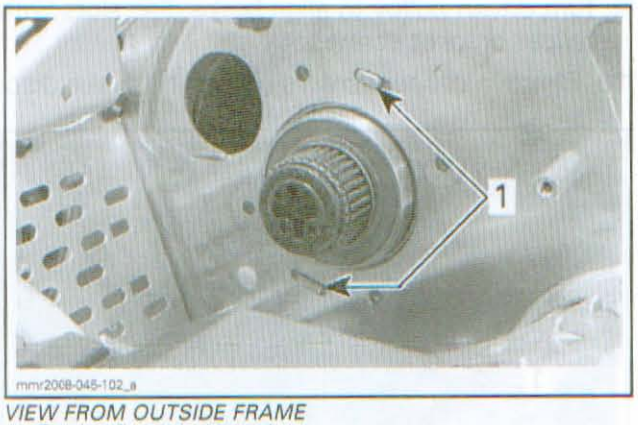

VIEW FROM OUTSIDE FRAME
1. Bearing flange locking tabs

6. Align brake disc splines with drive shaft splines and push the disc on the shaft.
7. Push the caliper bracket over drive shaft bearing.

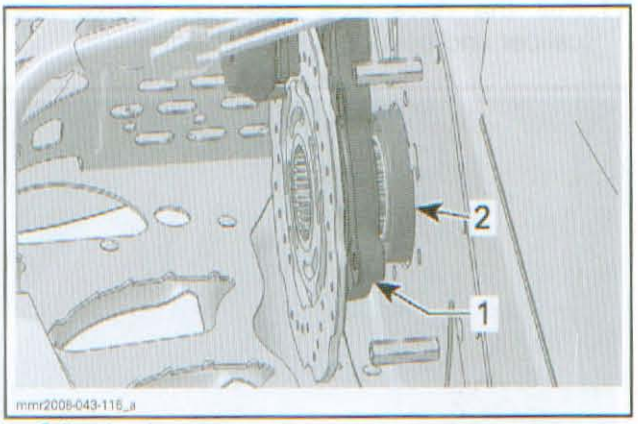

1. Caliper bracket
2. Drive shaft bearing

8. Align caliper bracket holes with bearing flange holes and install caliper screws.

www.midwestmanuals.com

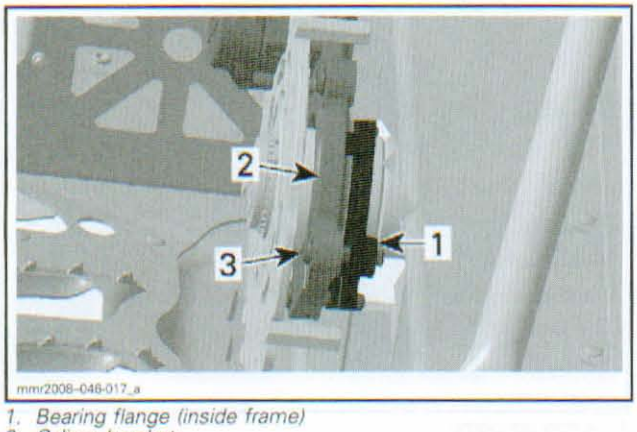

1. *Bearing flange (inside frame)*
2. *Caliper bracket*
3. *Caliper screws*

9. HAND TORQUE each caliper bracket screws evenly in a criss-cross pattern until bracket is correctly positioned against frame.

NOTICE **Never use an air tool to tighten caliper screws. The caliper bracket could cracked.**

10. Torque screws to 25 N•m (18 lbf•ft).
11. Install *BRAKE PADS*, see procedure above in this section.
12. Install the brake disc circlip.
13. Apply brake fluid on Banjo fitting threads.
14. Install the Banjo fitting with two NEW sealing washers.
15. Torque Banjo fitting to 35 N•m (26 lbf•ft).
16. Fill and bleed the brake system. Refer to *BRAKE FLUID REPLACEMENT* in this section.
17. Install all other removed parts.
18. Check the operation of the brake carefully before riding the snowmobile.

BRAKE DISC

Brake Disc Inspection

Prior Brake Disc Removal

1. Remove the disc brake protective cover.
2. Check for scoring, cracking or bending, replace as required.
3. Measure brake disc thickness. If the brake disc is out of specification, replace it with a new one.

NOTICE **Brake disc should never be machined.**

BRAKE DISC THICKNESS	
Minimum thickness	4.5 mm (.177 in)

After Brake Disc Removal

1. Check brake disc splines and drive shaft splines for wear or other damages. Replace defective parts.

Brake Disc Removal and Installation

Use the same procedure as for the caliper.

MASTER CYLINDER

Master Cylinder Removal

NOTE: If the master cylinder is not replaced, omit the next steps concerning the brake system draining and brake hose removal.

1. Drain the brake system, refer to *BRAKE FLUID REPLACEMENT* at the beginning of this section.
2. Remove the Banjo fitting and discard the sealing washers.

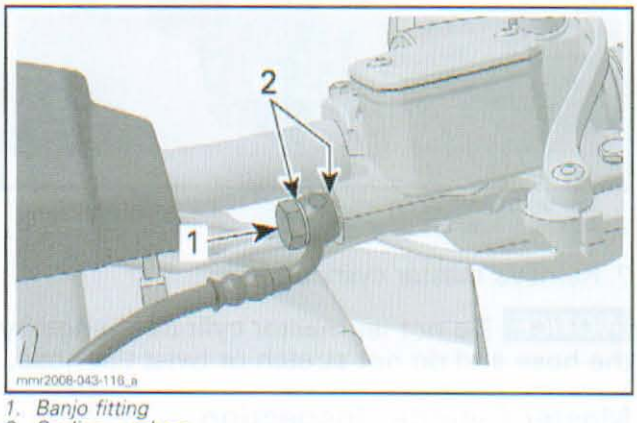

1. *Banjo fitting*
2. *Sealing washers*

3. Remove steering pad.

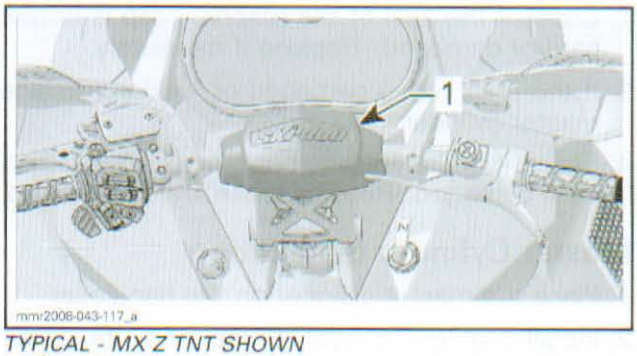

TYPICAL - MX Z TNT SHOWN
1. *Steering pad*

4. Unplug the LH connector.

www.midwestmanuals.com

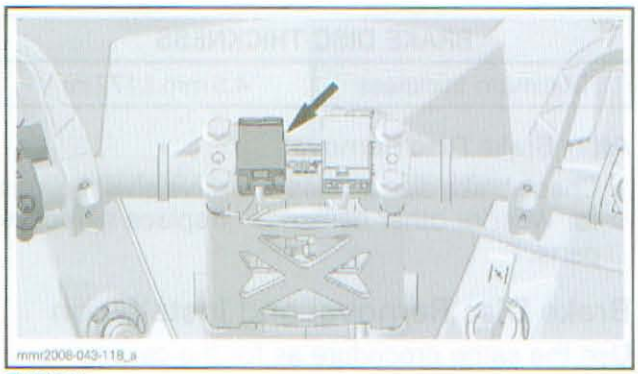

TYPICAL

5. Cut locking tie securing brake light switch wiring to handlebar.
6. Remove screws and clamp securing master cylinder to handlebar.

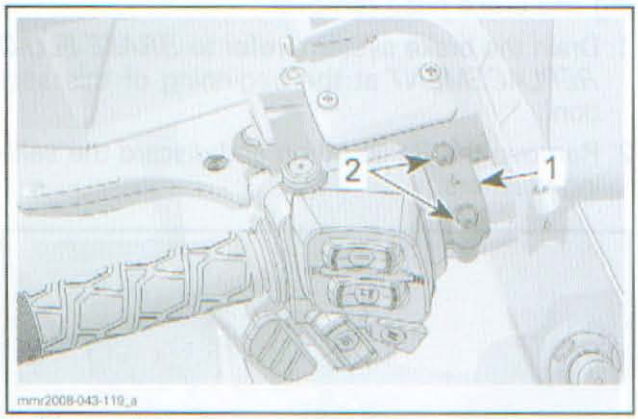

1. *Master cylinder clamp*
2. *Master cylinder clamp screws*

7. Remove master cylinder.

NOTICE **Do not let master cylinder hangs by the hose and do not stretch or twist the hose.**

Master Cylinder Inspection

1. Discard all remaining fluid inside master cylinder reservoir.
2. Check if the seal of the reservoir cap is brittle, hard or damaged. Replace if necessary.
3. If the reservoir is damaged or leaking, replace master cylinder.
4. Check if brake lever is bent, cracked or otherwise damaged. Replace brake lever if required.

Master Cylinder Installation

1. Place the master cylinder on the handlebar.
2. Install master cylinder clamp with its arrow pointing toward the front of vehicle.

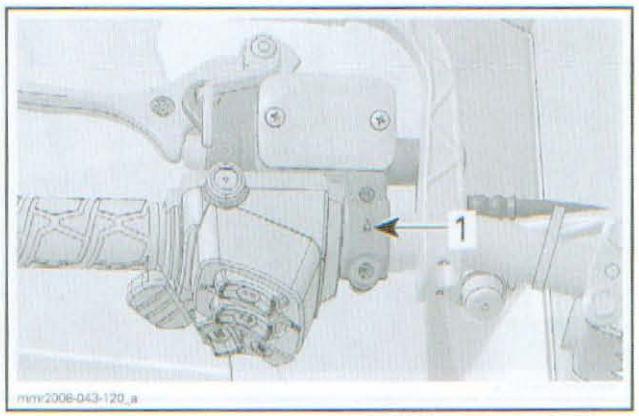

1. *Arrow on clamp*

3. Install master cylinder clamp screws and tighten loosely.
4. With the handlebar is straight ahead position, place the reservoir parallel to the ground.
5. Tighten brake lever clamp screws to 10 N•m (89 lbf•**in**).
6. Install the Banjo fitting with two NEW sealing washers.
7. Torque Banjo fitting to 18 N•m (159 lbf•**in**).
8. Fill and bleed the brake system. Refer to *BRAKE FLUID REPLACEMENT* at the beginning of this section.
9. Connect brake light switch connector.
10. Install steering cover.

BRAKE LIGHT SWITCH

Brake Light Switch Resistance Test

1. Remove steering cover and unplug the LH connector.

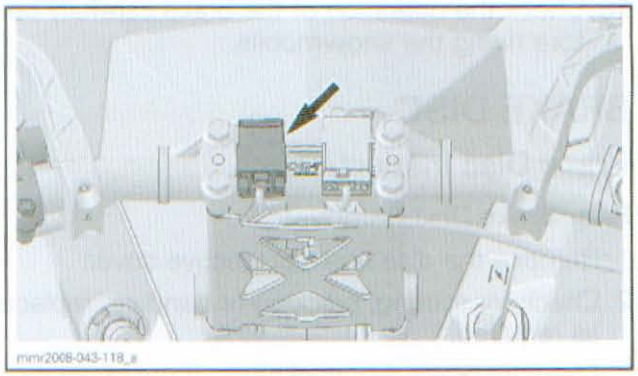

2. Validate switch operation with an ohmmeter.

SWITCH	WIRE	RESISTANCE
Released	Pin 3 and pin 4	Infinite (OL)
Pushed and held		0.2 Ω

www.midwestmanuals.com

If readings do not correspond to the above specifications, replace switch.

If readings correspond to the above specifications, check fuse, wiring and connectors going to switch. Repair or replace defective part(s).

Brake Light Switch Removal

1. Slip a small screwdriver between brake light switch and brake lever and separate them.

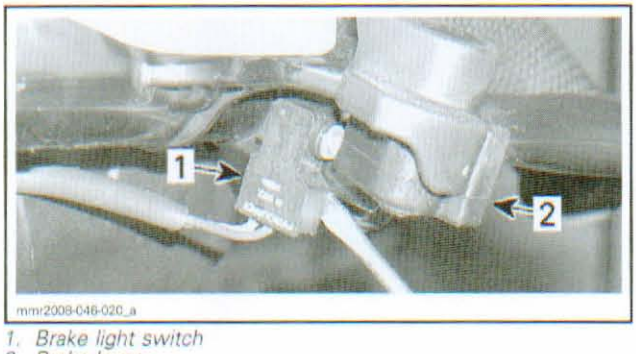

1. Brake light switch
2. Brake lever

2. Remove the steering cover and unplug the LH connector.

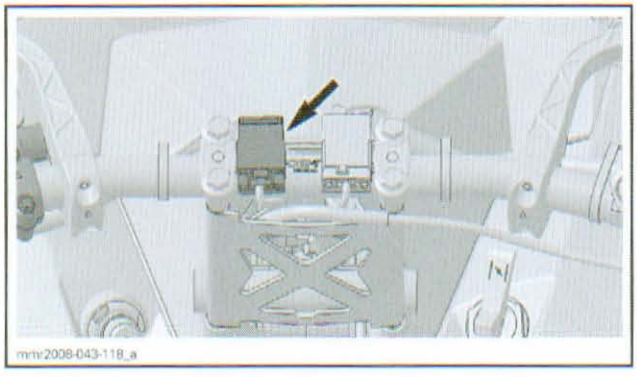

3. Cut all locking ties securing switch wires.
4. Remove switch wires from connector.

NOTE: Check wires location for reinstallation.

Brake Light Switch Installation

1. Plug switch wires into connector.
2. Squeeze brake lever.
3. Insert the both tabs of switch into brake lever body.
4. Plug the connector.
5. Check if switch is working properly.
6. Install new locking ties and the steering cover.

www.midwestmanuals.com

www.midwestmanuals.com

CHAINCASE

SERVICE TOOLS

Description	Part Number	Page
CHAINCASE BEARING EXTRACTOR/INSTALLER	529 036 111	480
	529 036 112	480

SERVICE TOOLS – OTHER SUPPLIER

Description	Part Number	Page
SNAP-ON SEAL PULLER	YA105	481

SERVICE PRODUCTS

Description	Part Number	Page
XP-S SYNTHETIC CHAINCASE OIL	413 803 300	475

www.midwestmanuals.com

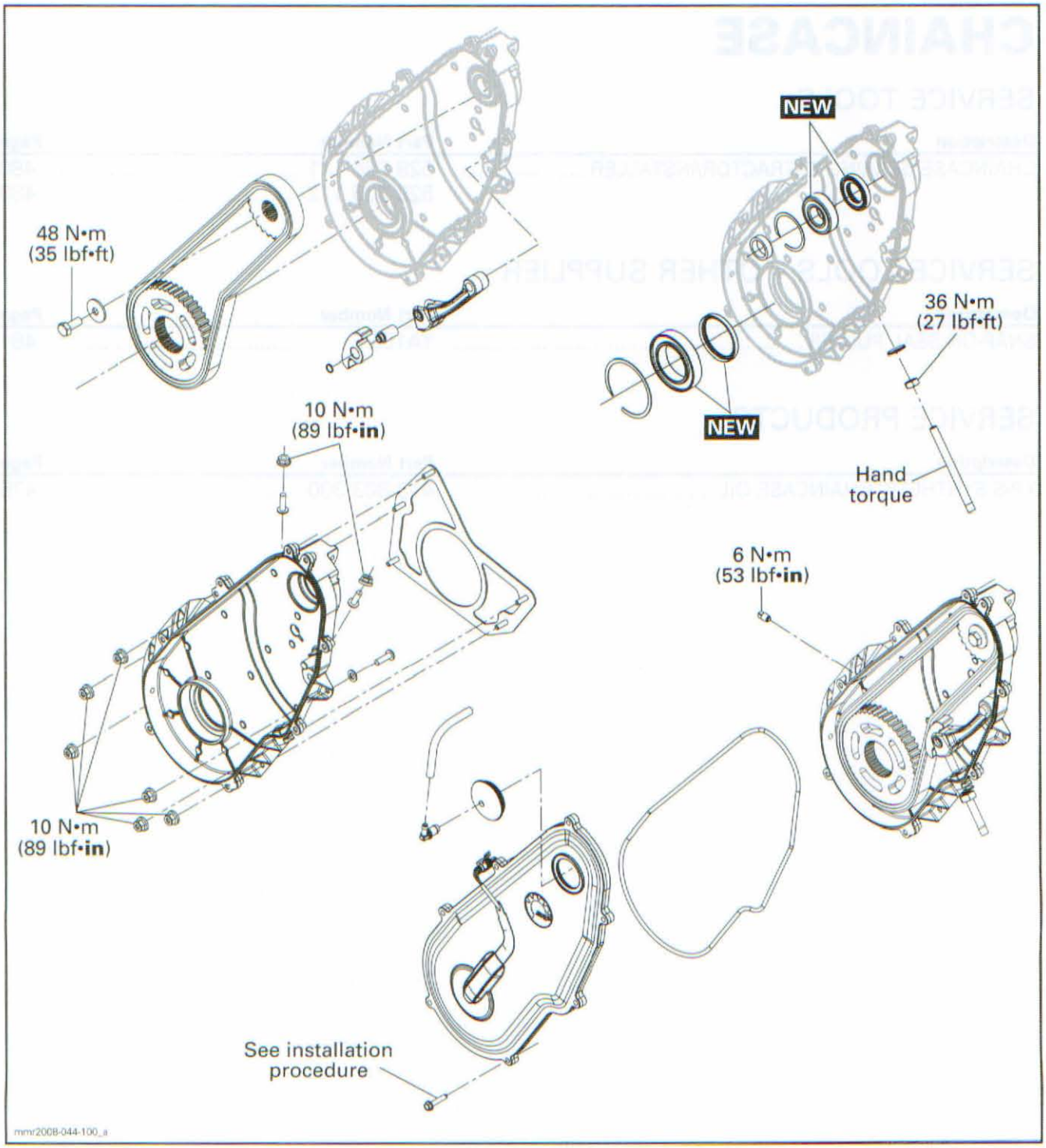

www.midwestmanuals.com

GENERAL

During assembly/installation, use the torque values and service products as in the exploded view.

Clean threads before applying a threadlocker. Refer to *SELF-LOCKING FASTENERS* and *LOCTITE APPLICATION* at the beginning of this manual for complete procedure.

⚠ WARNING

Torque wrench tightening specifications must be strictly adhered to.
Locking devices (e.g.: locking tabs, elastic stop nuts, cotter pin, etc.) must be replaced with new ones.

Hoses or cables removed or disconnected must be installed and routed at the same place.

NOTICE **Locking ties removed during a procedure must be replaced and installed at the same location.**

ADJUSTMENT

DRIVE CHAIN

1. Remove the muffler. Refer to *EXHAUST SYSTEM* section.
2. Unscrew the lock nut on tensioner adjustment screw.

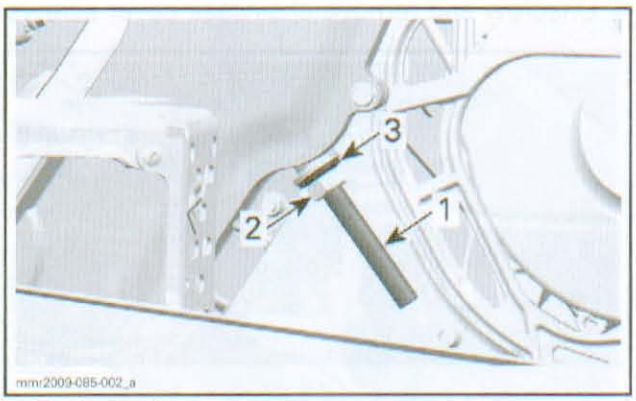

1. *Tensioner adjustment screw*
2. *Lock nut*
3. *Washer with rubber surface*

3. Push back washer with rubber surface.
4. Tighten tensioner adjustment screw **BY HAND**.

NOTE: Turn adjustment screw until resistance is strong enough that it can not be turned by hand.

5. Hold tensioner adjustment screw and tighten lock nut to 36 N•m (27 lbf•ft).

MAINTENANCE

CHAINCASE OIL

Recommended Oil

Use XP-S SYNTHETIC CHAINCASE OIL (P/N 413 803 300).

NOTICE **Use only the recommended type oil when servicing. Do not mix synthetic oil with other types of oil.**

Oil Level Verification

1. Place the vehicle on a level surface.
2. Remove the magnetic check plug on the left side of chaincase. Oil level must be equal with the lower edge.

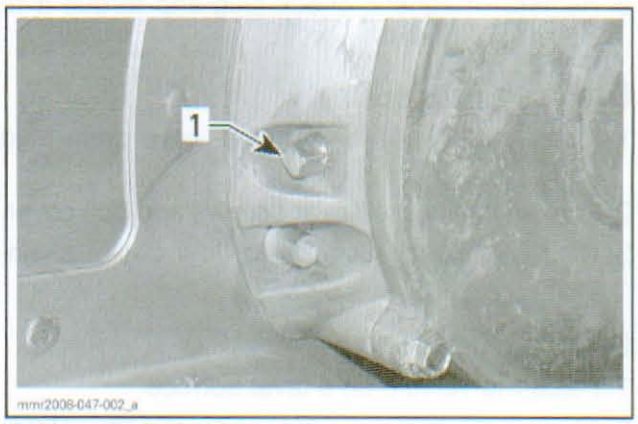

1. *Magnetic check plug*

3. Remove metal particles from magnetic check plug.

NOTE: It is normal to find metallic particles stuck to magnetic check plug. If bigger pieces of metal are found, remove the chaincase cover and inspect the chaincase parts.

4. To add oil, remove the filler cap on top of chaincase cover.

www.midwestmanuals.com

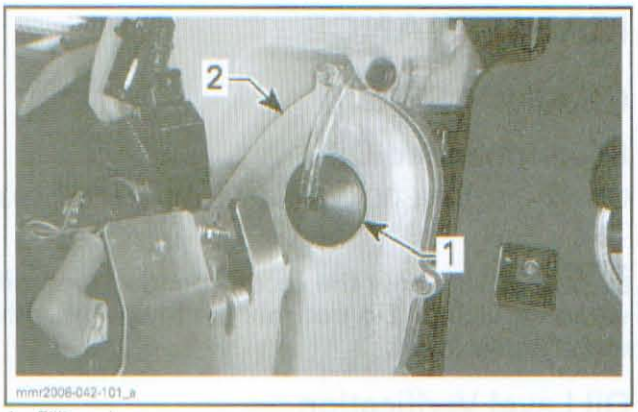

1. *Filling plug*
2. *Chaincase cover*

5. Pour recommended oil in chaincase by the filler hole until oil comes out by the magnetic check plug hole.
6. Reinstall magnetic check plug and torque it to 6 N•m (53 lbf•**in**).

Draining Procedure

1. Place a drain pan under chaincase drain plug area.
2. Loosen chaincase cover screws and pull cover.
3. Wait a while to allow oil to flow out of chaincase.

Filling Procedure

1. Place the vehicle on a level surface.
2. Make sure cover is tightened correctly. Refer to *CHAINCASE COVER INSTALLATION.*
3. Pour approximately 250 ml (8.5 U.S. oz) of recommended oil in chaincase by the filler hole until oil comes out by the magnetic check plug hole.
4. Reinstall magnetic check plug and torque it to 6 N•m (53 lbf•**in**).

PROCEDURES

CHAINCASE COVER

Chaincase Cover Removal

1. Remove the muffler. Refer to *EXHAUST SYSTEM* section.
2. On so equipped models, remove battery and battery rack. Refer to *CHARGING SYSTEM* section.
3. Remove filling plug on top of chaincase cover.

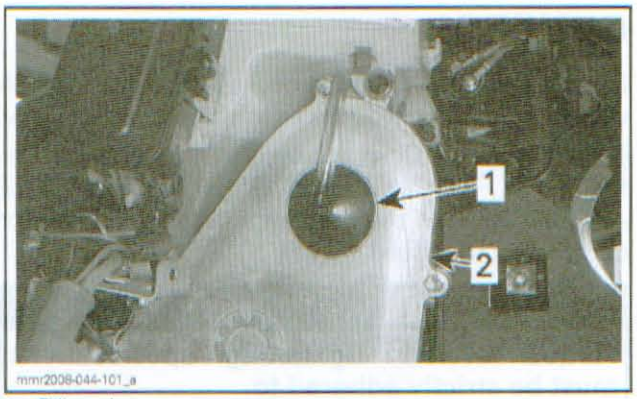

1. *Filling plug*
2. *Chaincase cover*

4. Disconnect the speed sensor connector.

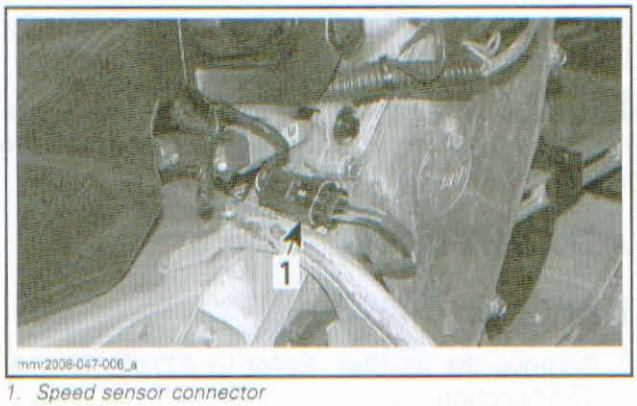

1. *Speed sensor connector*

5. Place a container under vehicle in line with chaincase to catch chaincase oil.
6. Unscrew and remove chaincase cover screws.

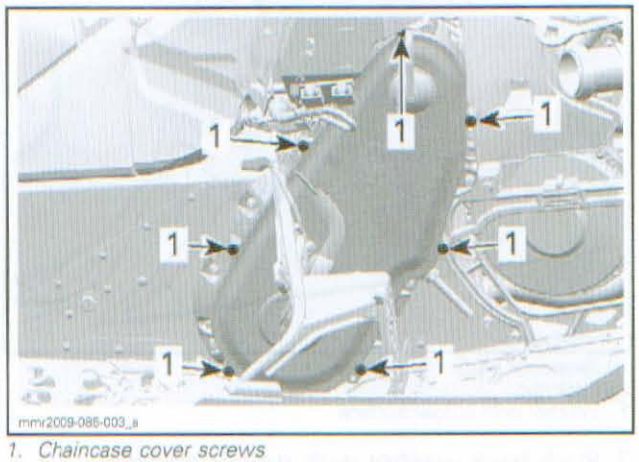

1. *Chaincase cover screws*

7. Pull the bottom of chaincase cover to drain oil. Wait a moment then remove the cover completely.

Chaincase Cover Inspection

1. Check the cover for cracks or other damages. Replace it if necessary.

www.midwestmanuals.com

2. Check if O-ring inside cover is brittle, hard or damaged. Replace it if necessary.

Chaincase Cover Installation

The installation is the reverse of the removal procedure. However, pay attention to the following:

1. Ensure cover O-ring is positioned correctly in its groove.
2. Tighten chaincase cover screws in accordance with the following sequence.

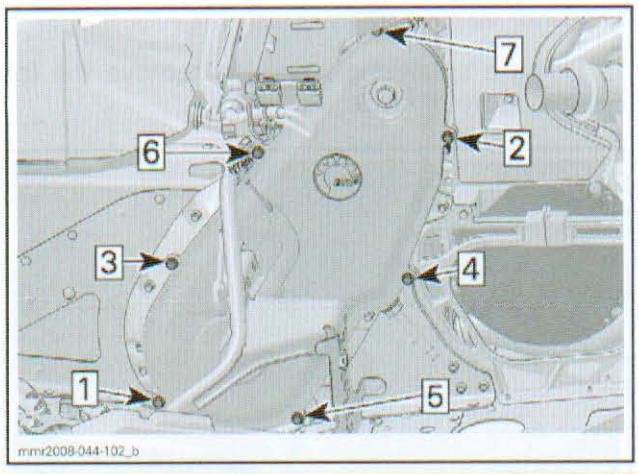

CHAINCASE COVER SCREWS TORQUE	
SAME CHAINCASE	10 N•m (89 lbf•**in**)
NEW CHAINCASE	15 N•m (133 lbf•**in**)

CHAINCASE

Chaincase Removal

1. Apply parking brake.
2. Remove muffler. Refer to *EXHAUST SYSTEM* section.
3. Remove *CHAINCASE COVER*, see procedure in this section.
4. Remove the upper sprocket screw and its conical spring washer.

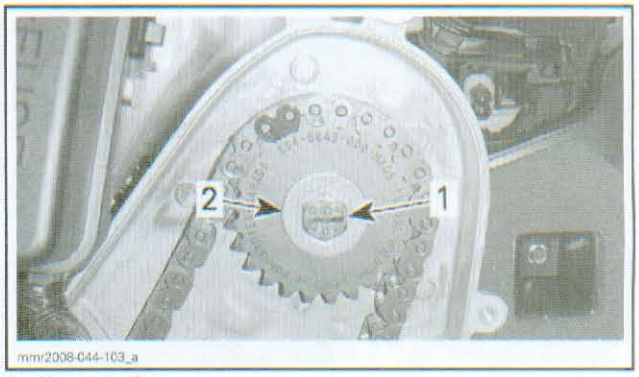

1. *Upper socket*
2. *Conical spring washer*

5. Release tension from drive chain by unscrewing the tensioner adjustment screw.

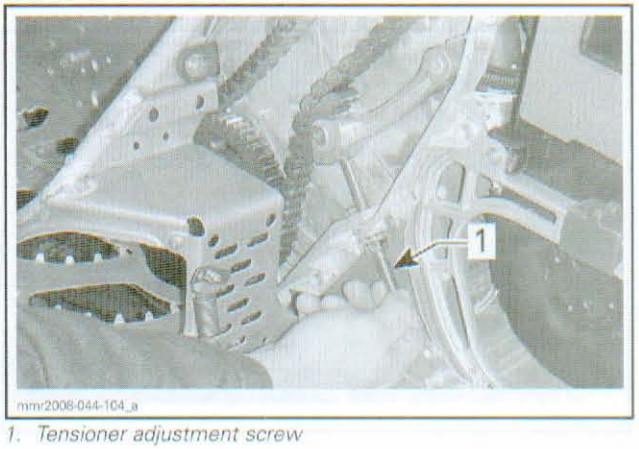

1. *Tensioner adjustment screw*

6. Remove tensioner arm.

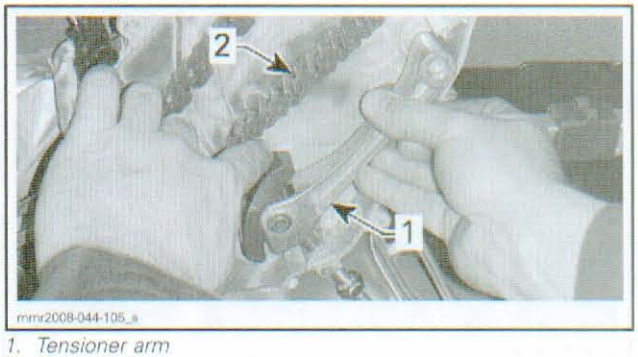

1. *Tensioner arm*
2. *Drive chain*

7. Remove the lower sprocket circlip.

www.midwestmanuals.com

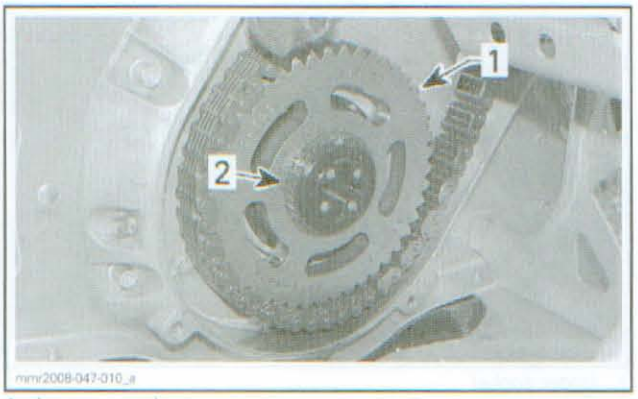

1. *Lower sprocket*
2. *Circlip*

8. Remove the upper sprocket, lower sprocket and drive chain simultaneously.

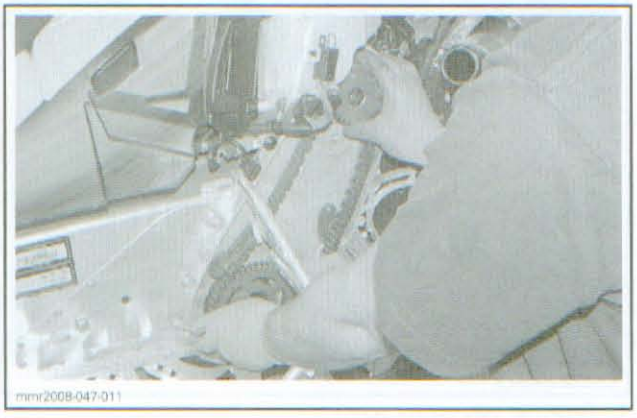

9. Remove the countershaft spacer.

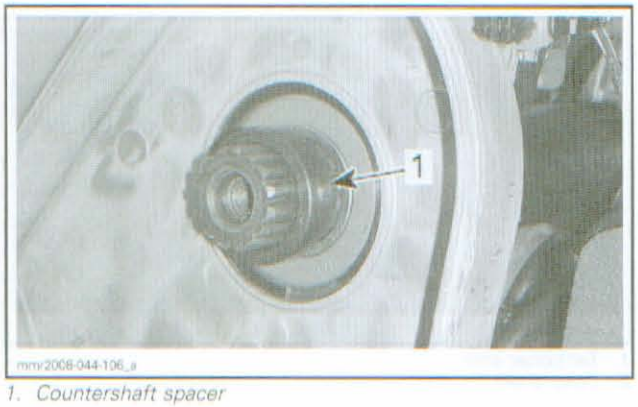

1. *Countershaft spacer*

10. Remove drive axle. Refer to *DRIVE AXLE* section.
11. Remove countershaft. Refer to *DRIVEN PULLEY AND COUNTERSHAFT* section.
12. Remove bolts securing the injection oil reservoir.

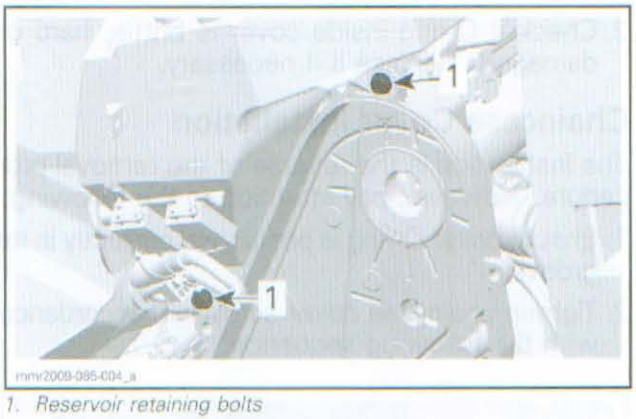

1. *Reservoir retaining bolts*

13. Using a small angle grinder, remove the following rivet heads.

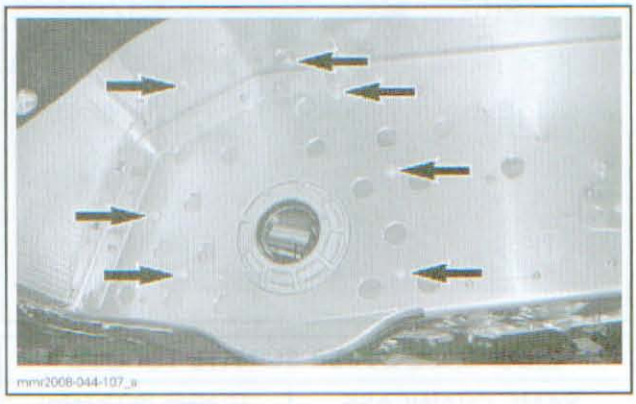

14. Using a 1/4 in drill bit, remove rivet located on right side of chaincase.



15. Unscrew bolt behind the top of chaincase.

www.midwestmanuals.com

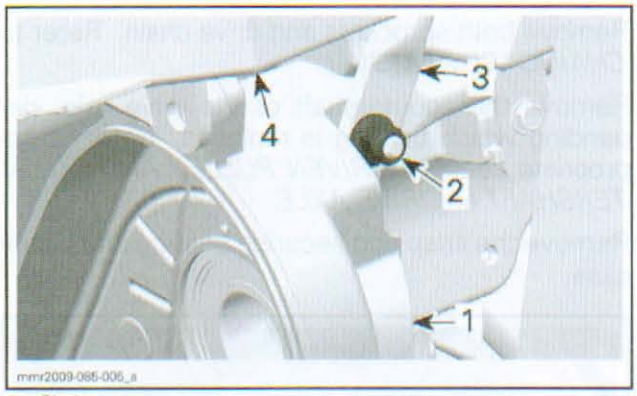

1. Chaincase
2. Retaining bolt
3. RH side frame member
4. Injection oil reservoir

16. Using 2 large pry bars inserted between chaincase and frame, pry chaincase out of vehicle.

Chaincase Inspection

Visually inspect the chain and sprockets for:

- Wear
- Cracks
- Damages teeth
- Missing links.

If a problem is detected, replace drive chain and sprockets as an assembly.

Check the drive chain deflection.

If the deflection is greater than 38 mm (1-1/2 in) without the chain tensioner, replace the chain.

Check for worn or defective bearings.

Check chain tensioner slider for wear or other damages.

Chaincase Installation

To install the chaincase, have the following parts in hands:

PARTS TO INSTALL CHAINCASE		
QTY	FASTENERS	P/N
1	Mounting plate	518 325 816
2	M6 x 20 hexagonal flanged bolt	207 662 034
7	M6 elastic flanged nut	233 261 434

Install the mounting plate.

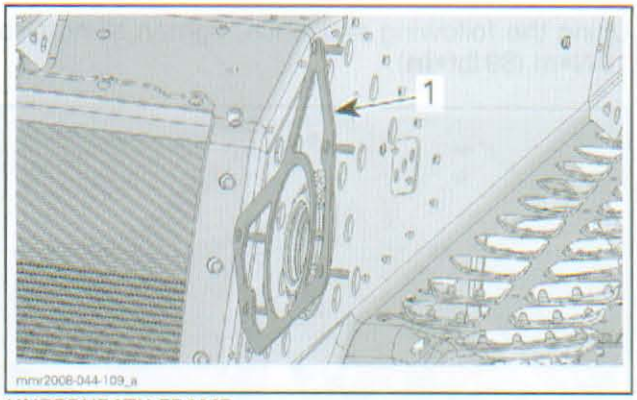

UNDERNEATH FRAME
1. Mounting plate

Install the chaincase.

Install 5 elastic flanged nuts to secure chaincase.

NOTE: Unless otherwise noted, bolts and nuts holding the chaincase must be installed loosely FIRST.

Install 2 flanged bolts and secure with elastic flanged nuts.

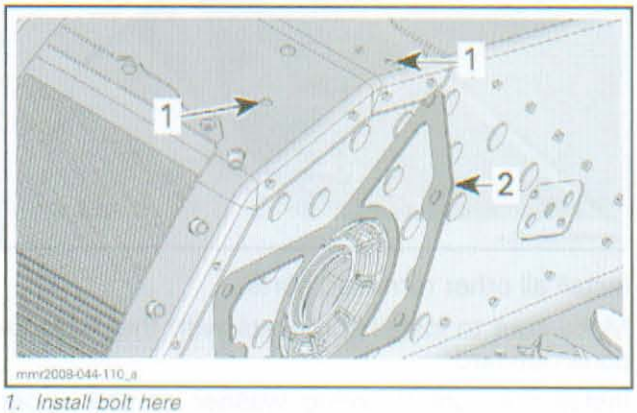

1. Install bolt here
2. Mounting plate

Install a flange bolt to securing chaincase to RH side member.



NUT LOCATED OUTSIDE

Install bolt behind the top of chaincase.

www.midwestmanuals.com

Using the following sequence, tighten all nuts to 10 N•m (89 lbf•**in**).

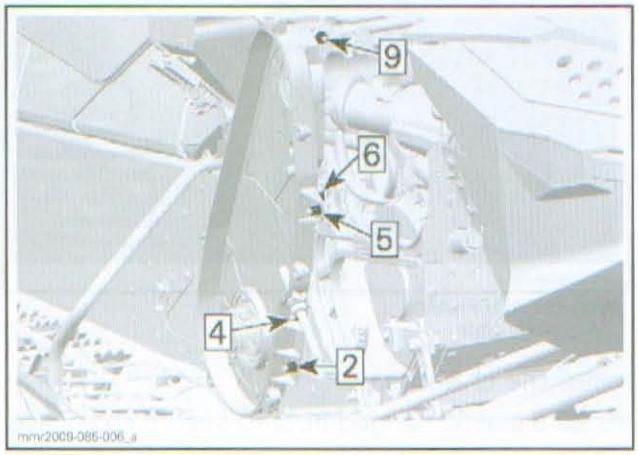

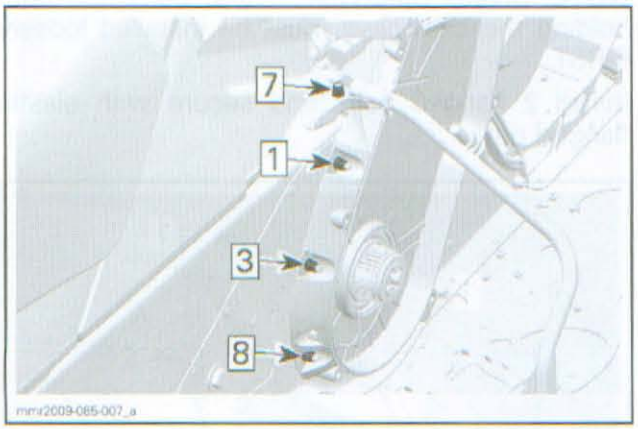

Install all other removed parts.

Make sure to install sprockets with their inscriptions outward.

Install the conical spring washer on the upper socket with its concave side toward sprocket.

Torque upper sprocket screw to 48 N•m (35 lbf•ft).

Install the *CHAINCASE COVER*, see procedure in this section.

Refill the chaincase, refer to *CHAINCASE OIL* above in this section.

Adjust drive chain. Refer to *DRIVE CHAIN ADJUSTMENT* in this section.

CHAINCASE BEARING

NOTE: This procedure can be applied either for the countershaft bearing or the drive shaft bearing.

Chaincase Bearing Removal

Remove chaincase cover.

Remove both sprockets and drive chain. Refer to *CHAINCASE REMOVAL*.

Remove the countershaft or the drive axle, depending which bearing is replaced. Refer to appropriate section, *DRIVEN PULLEY AND COUNTERSHAFT* or *DRIVE AXLE*.

Remove the snap ring securing bearing into chaincase.

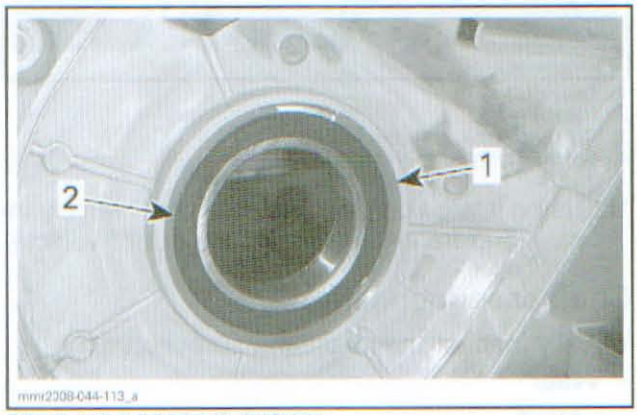

DRIVE AXLE BEARING SHOWN
1. *Snap ring*
2. *Bearing*

Install the appropriate bearing extractor:

BEARING	TOOL
Countershaft	CHAINCASE BEARING EXTRACTOR/INSTALLER (P/N 529 036 111)
Drive axle	CHAINCASE BEARING EXTRACTOR/INSTALLER (P/N 529 036 112)

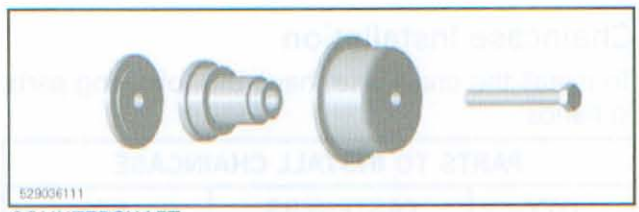

COUNTERSHAFT

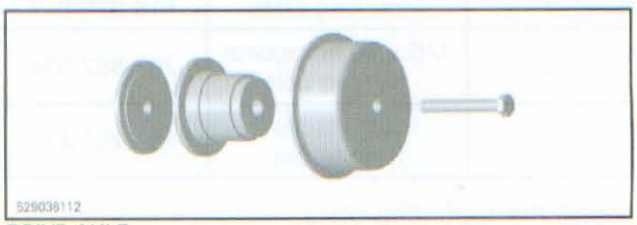

DRIVE AXLE

Install the extractor/installer tool behind the bearing.

www.midwestmanuals.com

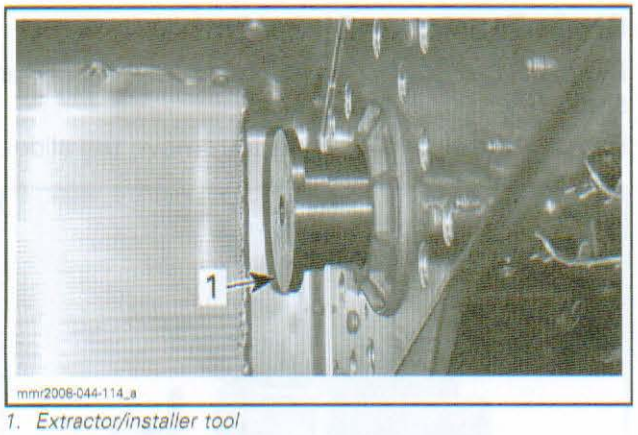

1. Extractor/installer tool

Install the extractor cup over bearing.

Tighten the extractor/installer tool screw to remove the bearing.

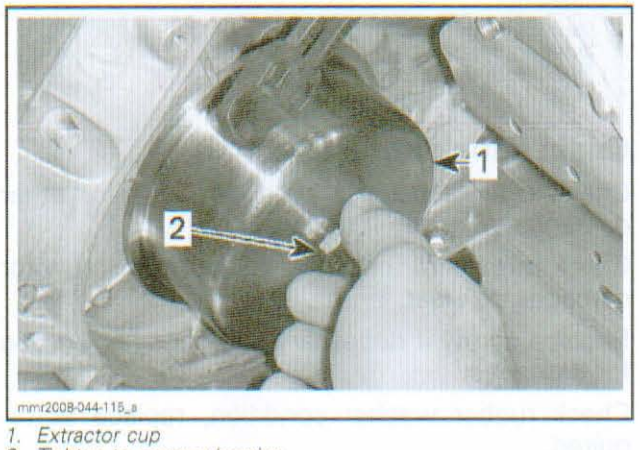

1. Extractor cup
2. Tighten to remove bearing

Using a seal puller such as the SNAP-ON SEAL PULLER (P/N YA105), remove and discard the oil seal.

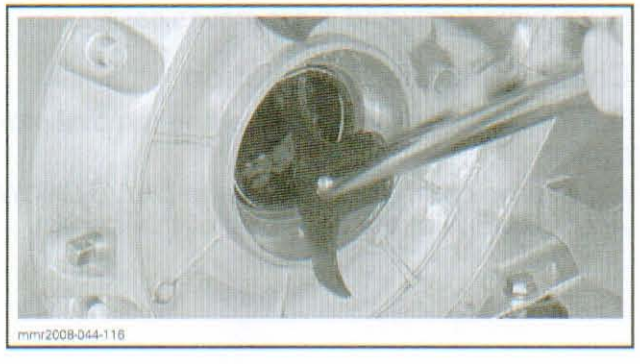

Chaincase Bearing Installation

Install the NEW oil seal on the extractor/installer tool. Position the lips toward bearing.

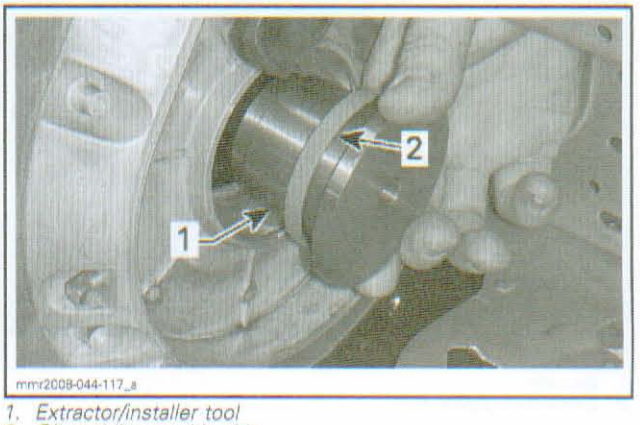

1. Extractor/installer tool
2. Oil seal lips on this side

Install the extractor cup inside frame.

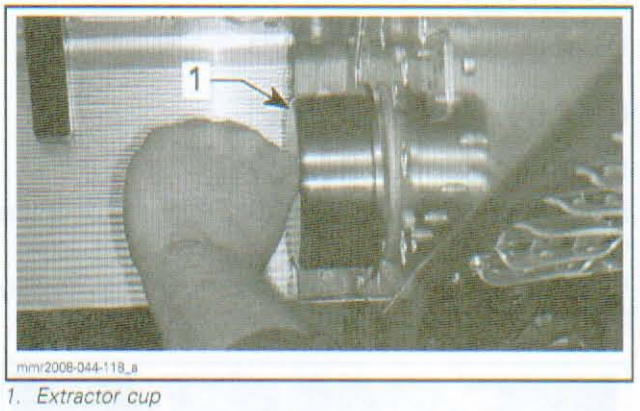

1. Extractor cup

Tighten the extractor/installer tool screw to install the oil seal.

Install the large washer and the extractor/installer tool screw inside frame.

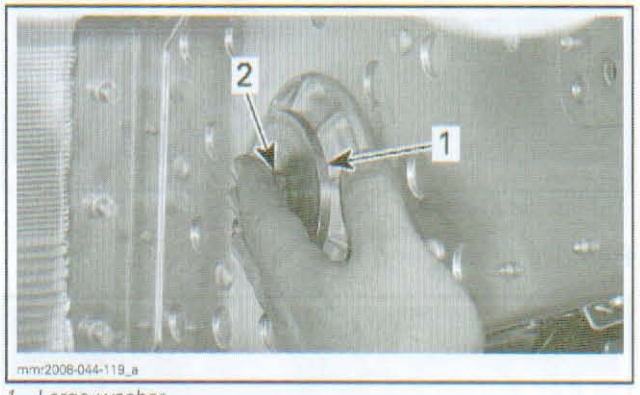

1. Large washer
2. Extractor/installer tool screw

In chaincase, install NEW bearing and the extractor/installer tool.

www.midwestmanuals.com

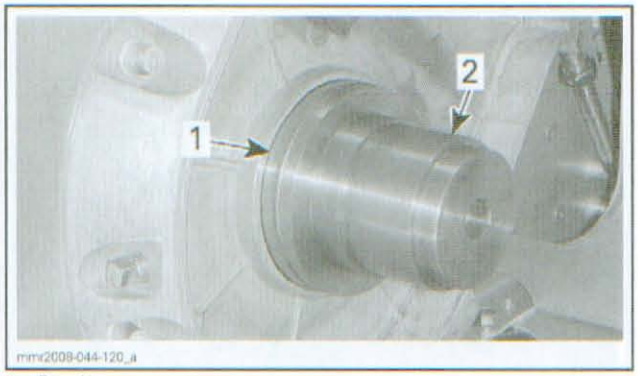

1. *Bearing*
2. *Extractor/installer tool*

Tighten the extractor/installer tool screw to install the bearing.

Remove tool.

Install all other removed parts.

CHAIN TENSIONER

Chain Tensioner Removal

Remove the *CHAINCASE COVER*, see procedure in this section.

Release tension from drive chain by unscrewing the tensioner adjustment screw.

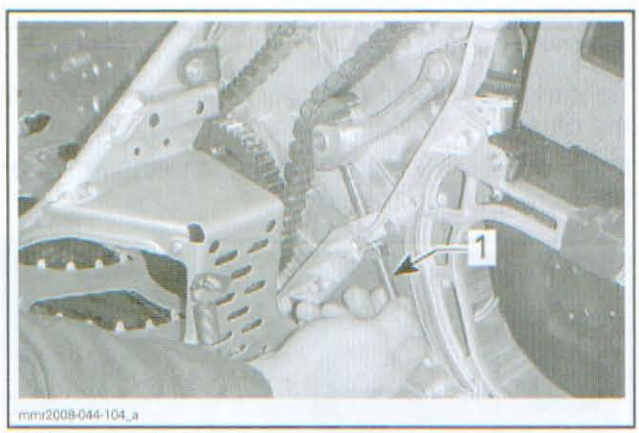

1. *Tensioner adjustment screw*

Remove tensioner arm.

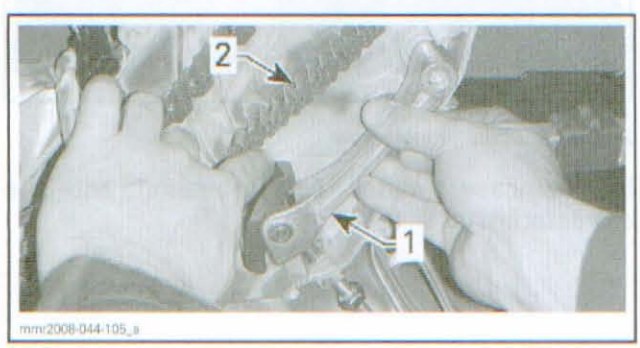

1. *Tensioner arm*
2. *Drive chain*

Chain Tensioner Disassembly

Remove the shaft ring securing the tensioner shaft to tensioner arm.

Remove the tensioner shaft to remove the slider.

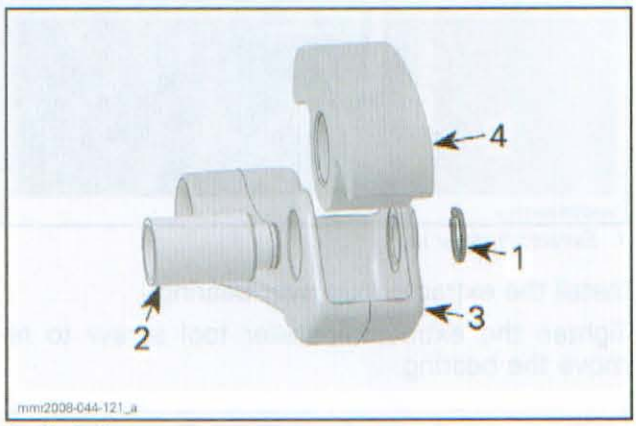

1. *Shaft ring*
2. *Tensioner shaft*
3. *Tensioner arm*
4. *Slider*

Chain Tensioner Inspection

Check chain tensioner slider for wear or other damages. Replace if necessary.

Check threads of tensioner adjustment screw for damages or wear.

Replace screw if necessary and check chaincase for damages.

Check rubber washer condition, replace as required.

Chain Tensioner Assembly

The assembly is the reverse of the disassembly.

NOTE: When assembly is completed, make sure circlip turns freely and slider moves easily.

Chain Tensioner Installation

The installation is the reverse of the removal procedure.

Adjust drive chain tension. Refer to *DRIVE CHAIN ADJUSTMENT* at the beginning of this section.

www.midwestmanuals.com

DRIVE AXLE

SERVICE TOOLS – OTHER SUPPLIER

Description	Part Number	Page
SNAP-ON 3-JAW PULLER	cg273	486

SERVICE PRODUCTS

Description	Part Number	Page
THERMO LUBE SYNTHETIC GREASE	219 700 417	487

www.midwestmanuals.com

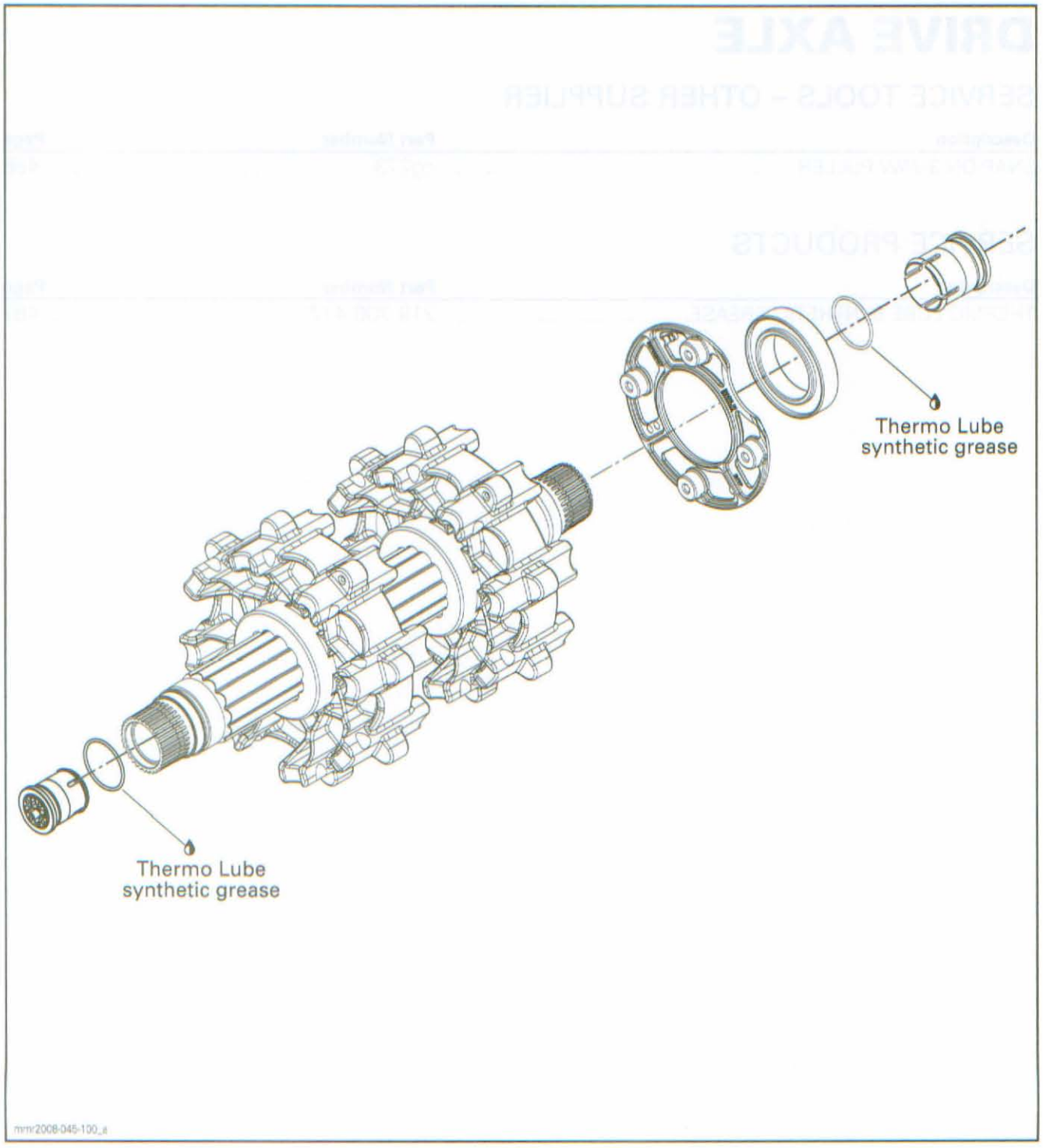

www.midwestmanuals.com

GENERAL

During assembly/installation, use torque values and service products as in the exploded view.

Clean threads before applying a threadlocker. Refer to *SELF-LOCKING FASTENERS* and *LOCTITE APPLICATION* at the beginning of this manual for complete procedure.

⚠ WARNING

Torque wrench tightening specifications must be strictly adhered to.
Locking devices (e.g.: locking tabs, elastic stop nuts, cotter pins, etc.) must be replaced with new ones.

PROCEDURES

DRIVE AXLE

Drive Axle Removal

1. Remove the rear suspension. Refer to *REAR SUSPENSION* section.
2. Remove the caliper. Refer to *BRAKE* section.
3. Remove the chaincase cover. Refer to *CHAINCASE* section.
4. Release tension from drive chain by unscrewing the tensioner adjustment screw.

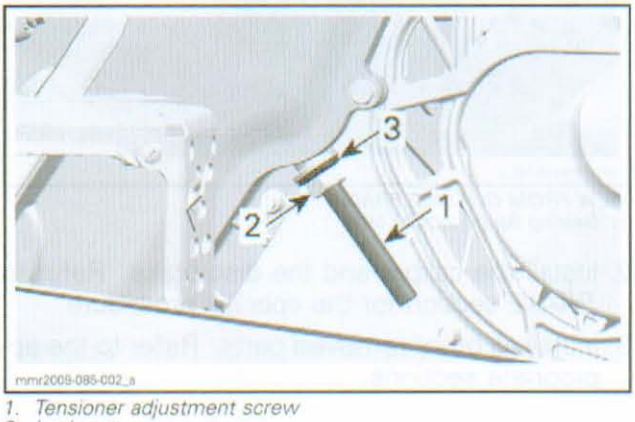

1. *Tensioner adjustment screw*
2. *Lock nut*
3. *Washer with rubber surface*

5. Remove the lower sprocket circlip.

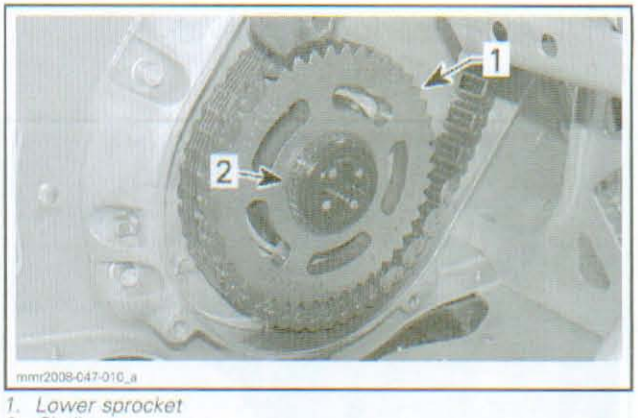

1. *Lower sprocket*
2. *Circlip*

6. Remove lower gear and drive chain.
7. From underneath of vehicle, turn the LH bearing flange counterclockwise to unlock it from frame.



1. *Bearing flange locking tabs*

8. Release drive axle sprockets from track and at the same time, push the drive axle toward the LEFT side.
9. Move the drive axle towards the right side to remove it from vehicle.

Drive Axle Inspection

Check if bearing turns smoothly and freely. Replace bearing if necessary.

Check if bearing seals are not damaged. Replace bearing if necessary.

Check if the bearing flange is cracked, bent or otherwise damaged. Replace it if required.

Replace drive axle if one of the following situations is detected:

- Cracked, worn or damaged drive axle
- Worn or damaged drive axle splines
- Worn or damaged sprockets
- Worn bearing journal.

www.midwestmanuals.com

Drive Axle Bearing Removal

1. Remove the O-ring.

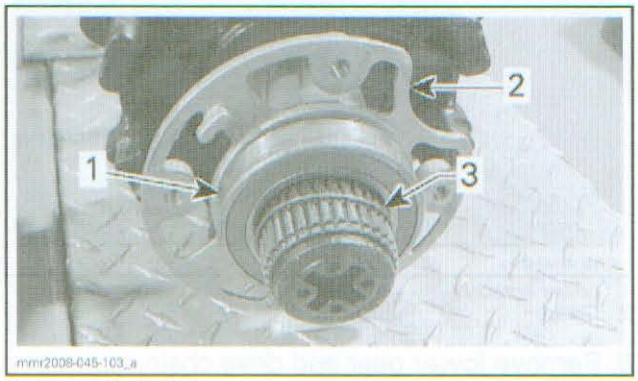

1. *Drive axle bearing*
2. *Bearing flange*
3. *O-ring*

2. Using a 3-jaw puller such as the SNAP-ON 3-JAW PULLER (P/N CG273), remove the drive axle bearing.

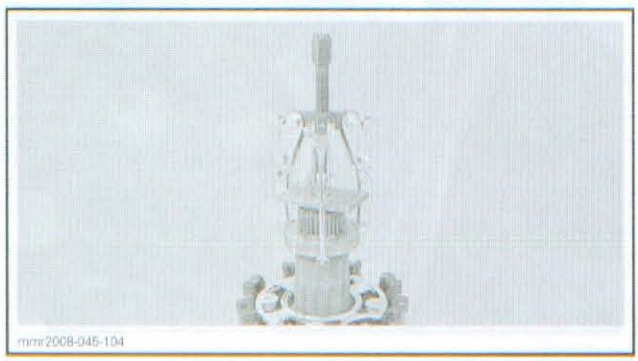

3. Remove the bearing flange.

Drive Axle Bearing Installation

1. Install bearing flange on drive axle.

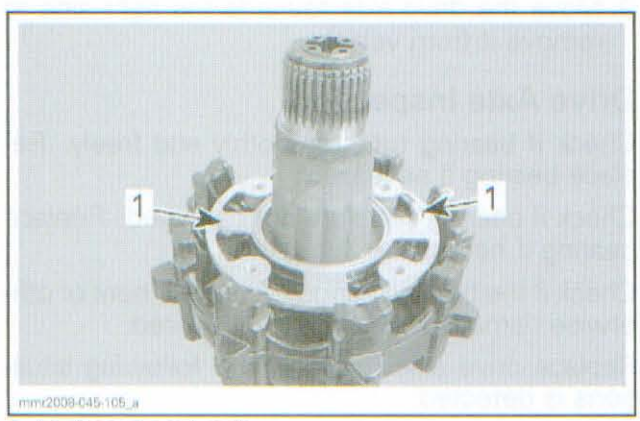

1. *Locking tabs outwards*

2. Using a press and a suitable pipe, push the bearing.

NOTICE Always push the bearing by inner race.

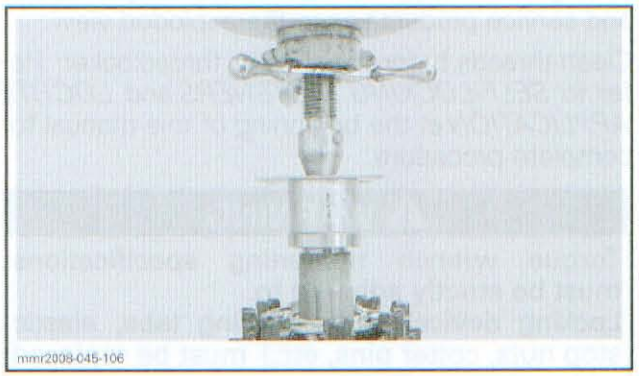

Drive Axle Installation

The installation is the reverse of the removal procedure. However, pay attention to the following.

1. Install drive axle then lock the bearing flange on frame.

NOTE: Ensure bearing flange is properly locked. Tabs must be properly inserted in frame.

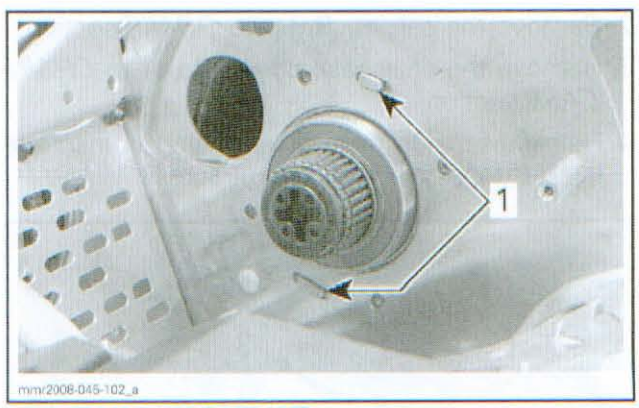

VIEW FROM OUTSIDE FRAME
1. *Bearing flange locking tabs*

2. Install the caliper and the disc brake. Refer to *BRAKE* section for the specific procedure.
3. Install all other removed parts. Refer to the appropriate sections.

MAGNETIC CAPS

Magnetic Cap Removal

1. For the LH cap, remove brake disc protective cover. Refer to *BRAKE* section.
2. For the LH cap, remove the chaincase cover. Refer to *CHAINCASE* section.
3. Using two screwdrivers or pliers, pry or pull the magnetic cap out of drive axle end.
4. Discard the magnetic cap.

www.midwestmanuals.com

Magnetic Cap Installation

1. Apply THERMO LUBE SYNTHETIC GREASE (P/N 219 700 417) on O-ring.
2. Insert the magnetic cap into drive axle.
3. Install all other removed parts.

www.midwestmanuals.com

www.midwestmanuals.com

TRACK

SERVICE TOOLS

Description	Part Number	Page
BELT TENSION TESTER	414 348 200	490
NARROW-CLEAT INSTALLER	529 036 044	489

PROCEDURES

TRACK

Track Inspection

Visually inspect track for:
- Cuts and abnormal wear
- Broken rods
- Broken or missing track cleats
- Perforations in the track
- Tears in the track (particularly around traction product holes)
- Lugs that are broken or torn off, exposing portion of rods
- Delamination of the rubber
- Broken studs
- Bent studs
- Studs that are torn off the track
- Missing track guide(s).

If track is damaged or rods are broken, replace track. For damaged or missing cleats, replace by new ones.

⚠ WARNING

Do not operate a snowmobile with a cut, torn or damaged track.

Track Cleat Replacement

Raise rear of vehicle off the ground.

Lift snow guard.

Rotate track to expose a cleat to be replaced.

Remove cleat from track using plastic hammer and a big screwdriver.



TYPICAL
1. Cleat

Place new cleat in position on the track.

Secure cleat using the NARROW-CLEAT INSTALLER (P/N 529 036 044).

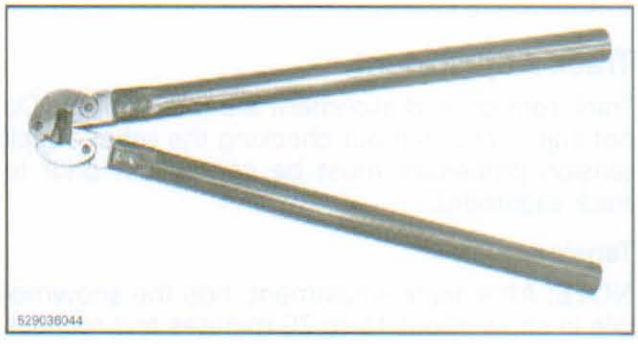

Bend cleat and push tabs into rubber.

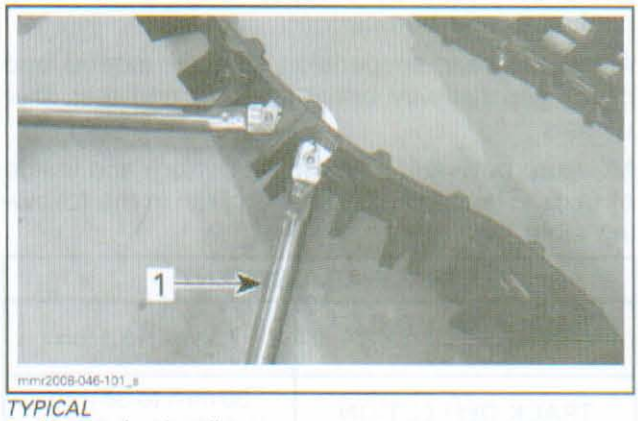

TYPICAL
1. Narrow-cleat installer

Reopen narrow-cleat installer.

Position cleat tabs on open end of tool.

www.midwestmanuals.com

Squeeze tabs until they are indented in rubber.

Track Removal

Remove rear suspension from vehicle. Refer to *REAR SUSPENSION*.

Remove track from rear suspension.

Track Installation

Reverse the removal procedure.

NOTE: When installing the track, respect rotation direction indicated by an arrow on track thread.

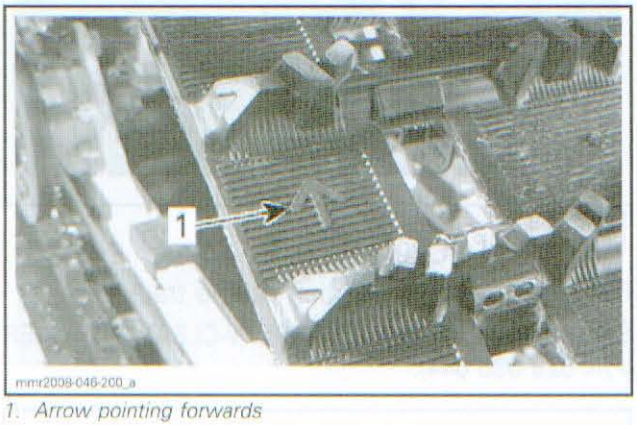

1. Arrow pointing forwards

Track Adjustment

Track tension and alignment are interrelated. Do not adjust one without checking the other. Track tension procedure must be carried out prior to track alignment.

Tension

NOTE: After track adjustment, ride the snowmobile in snow about 15 to 20 minutes and recheck track tension.

Lift snowmobile by a rope, chain or lift strap hooked to rear bumper.

Allow the rear suspension to fully extend and check gap halfway between front and rear idler wheels.

Measure between slider shoe bottom and inside of track. The gap should be as given in the following table.

TRACK ADJUSTMENT	
TRACK ADJUSTMENT FORCE	7.3 kgf (16.1 lbf)
TRACK DEFLECTION	30 mm to 35 mm (1.181 in to 1.378 in)

The BELT TENSION TESTER (P/N 414 348 200) may be used to measure deflection as well as force applied.

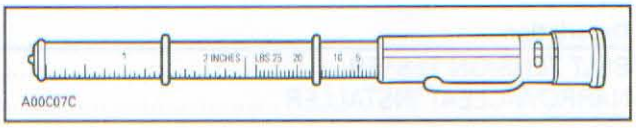

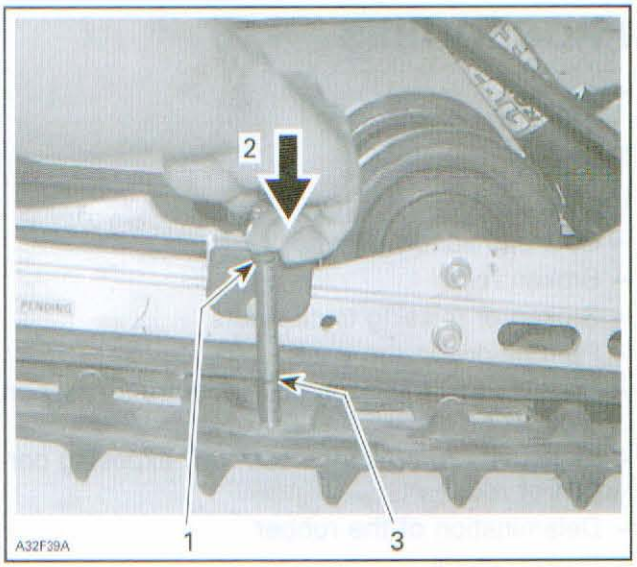

1. Tool top O-ring positioned at 7.3 kgf (16 lbf)
2. Apply pressure on tool until it contacts the upper O-ring
3. Measured track deflection

NOTICE Too much tension will result in power loss and excessive stresses on suspension components.

To adjust tension, do the following:

1. Lift rear of vehicle and support it off the ground.
2. Remove rear idler wheel caps.

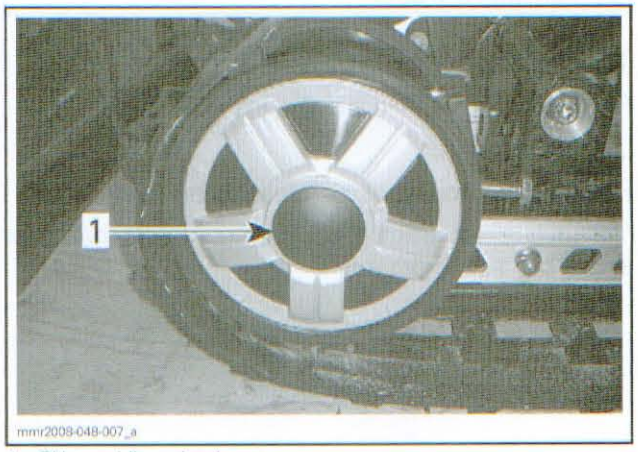

1. RH rear idler wheel cap

3. Unscrew and remove rear axle screws (one each side).

www.midwestmanuals.com



1. *RH rear axle screw*

4. Tighten or loosen both adjustment screws to increase or decrease track tension.

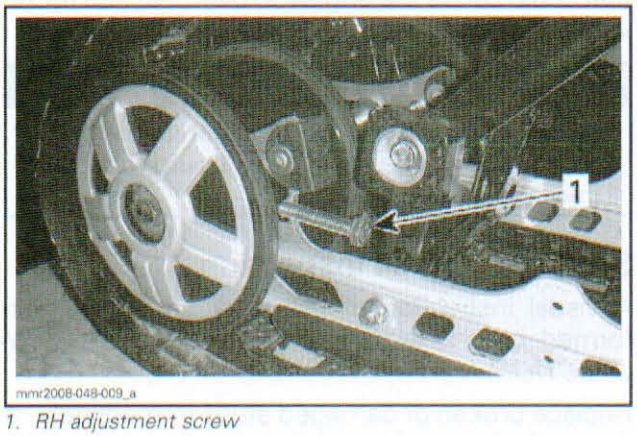

1. *RH adjustment screw*

Alignment

⚠ WARNING

Before checking track alignment, ensure that the track is free of all particles which could be thrown out while track is rotating. Keep hands, tools, feet and clothing clear of track. Ensure no one is standing in close proximity to the vehicle. Never rotate at high speed.

Start the engine and accelerate slightly so that track barely turns. This must be done in a short period of time (1 to 2 minutes).

Check that the track is well centered; equal distance on both sides between edges of track guides and slider shoes.

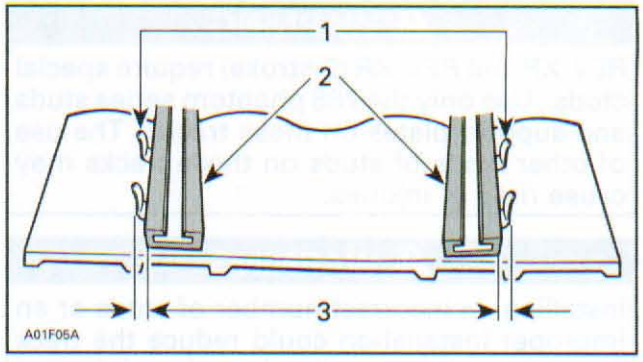

1. *Guides*
2. *Slider shoes*
3. *Equal distance*

To correct, stop engine, loosen rear wheel screws, then tighten the adjustment screw on side where the slider shoe is the farthest from the track insert guides.

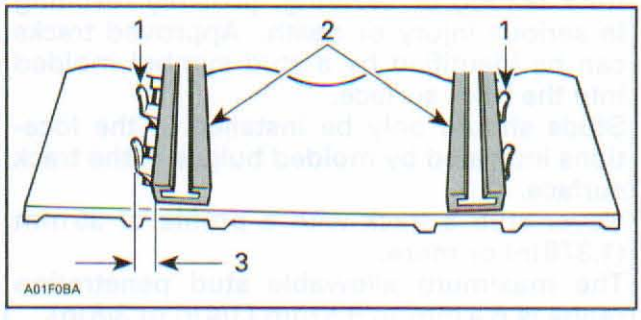

1. *Guides*
2. *Slider shoes*
3. *Tighten on this side*

Restart engine, rotate track slowly and recheck alignment.

If the satisfactory alignment is achieved, then tighten the idler wheel retaining screws to 48 N•m (35 lbf•ft).

Reinstall the wheel caps.

TRACTION ENHANCING PRODUCTS (STUDS)

Important Safety Rules

All REV-XP and REV-XR (2-stroke) tracks use special single ply of fabric track to reduce weight and rolling resistance. The conventional track design is a 2 layers of fabric and one layer of high strength tensile cord. These new tracks design is a single layer of fabric and one layer of tensile cord. This results in a thinner track and if studded, absolutely requires the use of the 286 Phantom series designed studs.

www.midwestmanuals.com

⚠ WARNING

REV-XP and REV-XR (2-stroke) require special studs. Use only the 286 phantom series studs and support plates on these tracks. The use of other kinds of studs on these tracks may cause risks of injuries.

⚠ WARNING

Installing an incorrect number of studs or an improper installation could reduce the track life and possibly resulting in serious injury or death.

⚠ WARNING

Never stud a track that has not been approved for studs. Installing studs on an unapproved track could increase the risk of the track tearing or severing, possibly resulting in serious injury or death. Approved tracks can be identified by a stud symbol molded into the track surface.
Studs should only be installed in the locations indicated by molded bulges in the track surface.
Never stud a track with a profile of 35 mm (1.378 in) or more.
The maximum allowable stud penetration range is 6.4 mm to 9.5 mm (1/4 in to 3/8 in).
The number of studs installed must match the number of molded bulges in the track.
Strictly adhere to the specified tightening torque.

⚠ WARNING

To prevent serious injury to individuals near the snowmobile:
- NEVER stand behind or near a moving track.
- ALWAYS use a wide-base snowmobile stand with a rear deflector panel.
- When the track is raised off the ground, only run it at lowest possible speed.

Centrifugal force could cause debris, damaged or loose studs, pieces of torn track, or an entire severed track to be violently thrown backwards out of the tunnel with tremendous force, possibly resulting in the loss of a leg or other serious injury.

Effects of Having a Studded track on the Life of the Snowmobile

The use of traction enhancing products can increase the load and the stress on certain snowmobile components, as well as the vibration level. This can cause premature wear on parts such as belts, brake lining, bearings, chain, and chaincase sprockets, and on approved studded tracks, shorten track life. For this reason, it is even more important to follow the detailed maintenance program given in the *MAINTENANCE CHART*.

Studs on the track can also cause serious damage to the snowmobile if it is not equipped with the tunnel protectors designed for the particular model. Damage to the electrical wiring or perforation of the heat exchangers are potential hazards, that could cause the engine to overheat and be severely damaged.

⚠ WARNING

If tunnel protectors are excessively worn or not installed, the gas tank could be punctured, causing a fire.

Studs and Track Inspection

A visual inspection of the track should be performed before each use. Refer to *TRACK INSPECTION*.

Replace broken or damaged studs immediately. If the track shows signs of deterioration, it must be replaced immediately. In doubt, replace the track.

⚠ WARNING

Riding with a damaged track or studs could lead to loss of control, resulting in a risk of serious injury or death.

Stud Installation Tables

Use the following table for appropriate size and quantity of studs.

www.midwestmanuals.com

APPROVED STUDS ACCORDING TO TRACK LUG HEIGHT			
LUG HEIGHT	STUD SIZE	QTY OF STUDS FOR A 120" TRACK	QTY OF STUDS FOR A 137" TRACK
1.000"	1.075"	84	96
1.250"	1.325"	84	96

Use the following table for appropriate tunnel protector kits.

TUNNEL PROTECTOR KITS		
CHASSIS TYPE	TRACK DIMENSION	KIT P/N
REV-XP	All 120" and 137" (up to 1.250")	860 200 267
REV-XR (2-stroke)		

Stud Installation Procedure

Refer to manufacturer's instruction for complete installation procedure.

www.midwestmanuals.com

www.midwestmanuals.com

FRONT SUSPENSION

SERVICE TOOLS

Description	Part Number	Page
BALL JOINT INSTALLER	529 035 975	504
BALL JOINT REMOVER	529 035 827	501
	529 036 121	503–504
SPRING COMPRESSOR TOOL	529 036 007	499

Midwest Manuals
sales@midwestmanuals.com
www.midwestmanuals.com

www.midwestmanuals.com

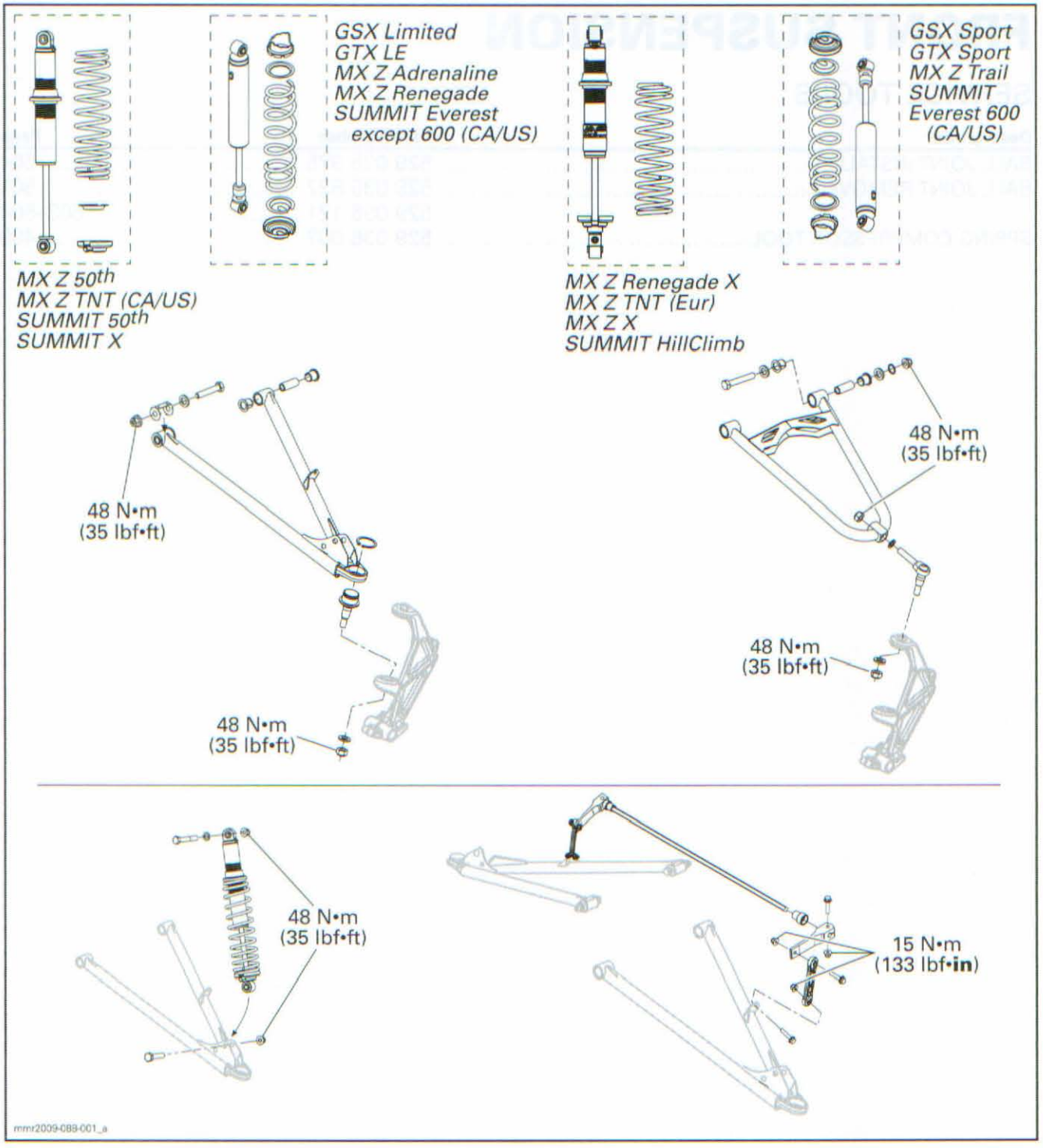

www.midwestmanuals.com

GENERAL

The procedure explained below is the same for the RH and LH sides unless otherwise noted.

During assembly/installation, use torque values and service products as in the exploded view.

Clean threads before applying a threadlocker. Refer to *SELF-LOCKING FASTENERS* and *LOCTITE APPLICATION* at the beginning of this manual for complete procedure.

⚠ WARNING

Torque wrench tightening specifications must be strictly adhered to.
Locking devices (e.g.: locking tabs, elastic stop nuts, cotter pins, etc.) must be replaced with new ones.

Check for loose, bent, worn out, rusted or otherwise damaged components. Replace the faulty components.

ADJUSTMENT

SUSPENSION SPRING

SPRINGS ADJUSTMENT GUIDELINE		
HANDLING	STEERING	SOLUTION
Too soft	Too easy to turn	Increase spring preload
Too hard	Hard to turn	Decrease spring preload

⚠ WARNING

Adjust both springs to the same load. Uneven adjustment can cause poor handling and loss of stability, and/or control, and increase the risk of an accident.

Spring Preload Adjustment

Screw Type Adjustment

MX Z (50th, Renegade X, TNT, X) and SUMMIT (50th, Hill Climb, X (CA/US), X (154" EUR))

Grab and turn the spring to increase or decrease spring preload.

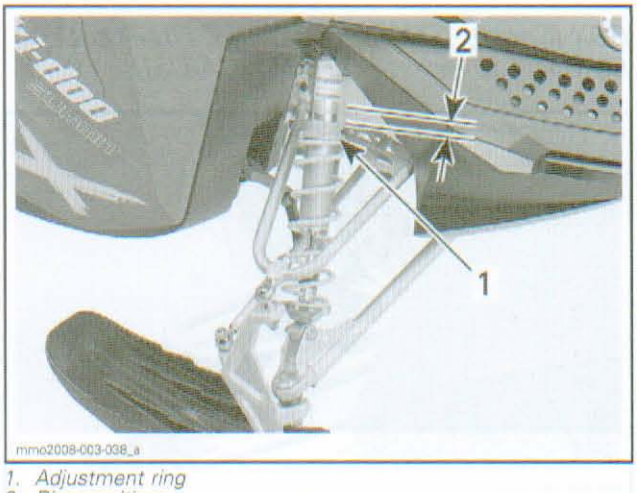

1. *Adjustment ring*
2. *Ring positions*

Cam Type Adjustment

Using the suspension adjustment tool (included in the tool kit), turn the cam to increase or decrease spring preload.

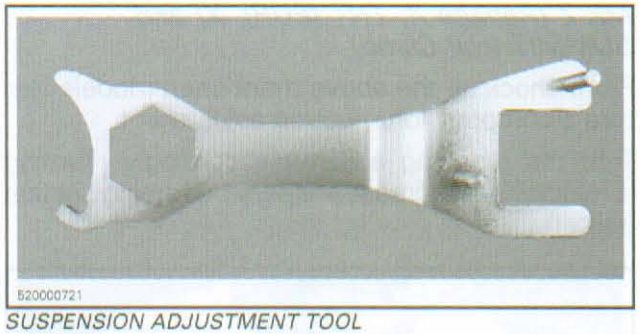

SUSPENSION ADJUSTMENT TOOL

GSX (Limited), GTX (LE), MX Z (Adrenaline, Renegade) and SUMMIT (Everest 600 (EUR), 600 E-TEC, 800R)

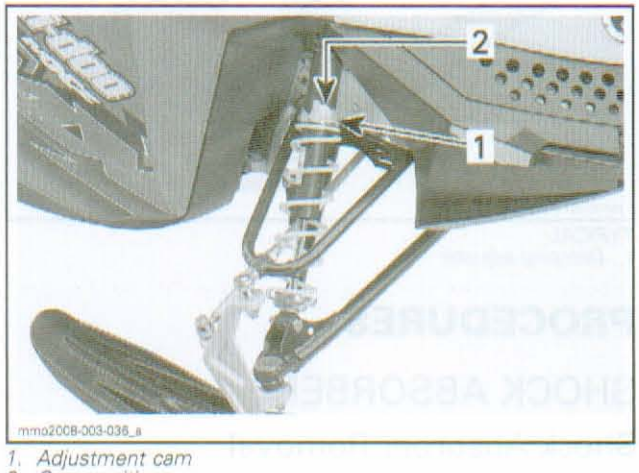

1. *Adjustment cam*
2. *Cam positions*

www.midwestmanuals.com

GSX (Sport), GTX (Sport), MX Z (Trail) and SUMMIT (Everest 600 146" (CA/US))

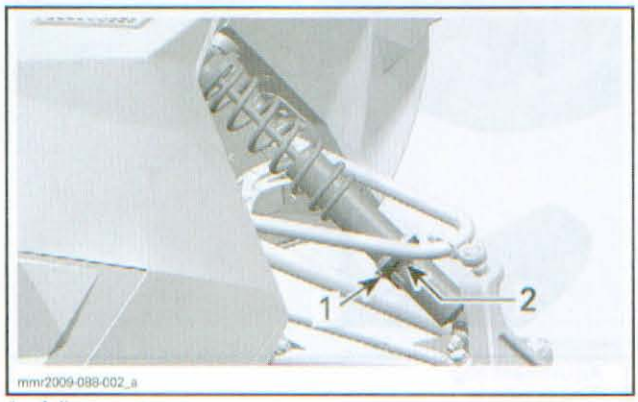

1. *Adjustment cam*
2. *Cam positions*

SHOCK ABSORBER

Compression/Rebound Adjustment

MX Z (Renage X, TNT (EUR), X) and SUMMIT (Hill Climb)

Front shock on the above mentioned models feature a compression/rebound adjustment.

Turn the damping adjuster accordingly. Turning it clockwise increases shock damping action (stiffer).

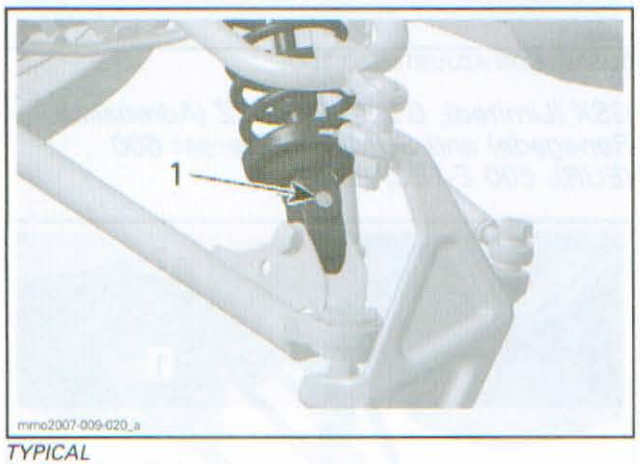

TYPICAL
1. *Damping adjuster*

PROCEDURES

SHOCK ABSORBER

Shock Absorber Removal

Refer to *BODY* section to remove the following:
- Hood
- Side panel(s).

To remove the RH shock absorber, remove the muffler. Refer to *EXHAUST SYSTEM* section.

To remove the LH shock absorber, remove the tool kit support by pressing the locking tab.

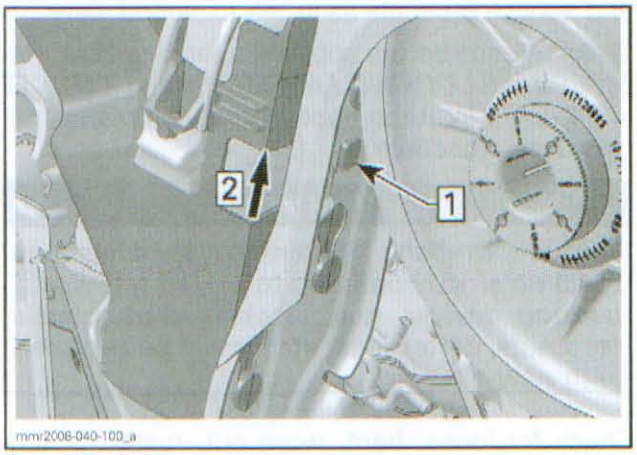

Step 1: Press tab
Step 2: Lift tool kit support

Lift the front of vehicle until skis are off the ground.

Remove the shock absorber upper bolt.

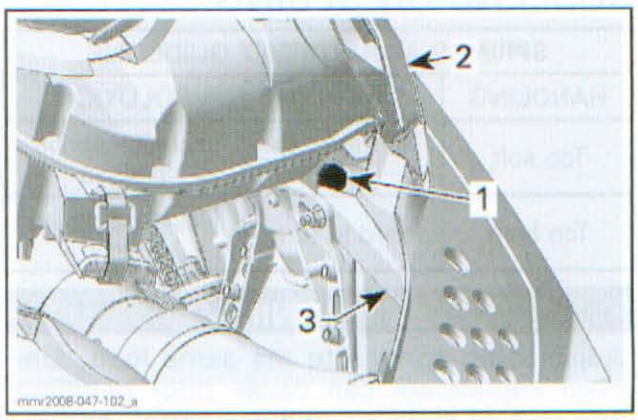

1. *LH shock absorber upper bolt*
2. *Secondary air intake silencer*
3. *Front bumper*

Remove the shock absorber lower bolt.

www.midwestmanuals.com

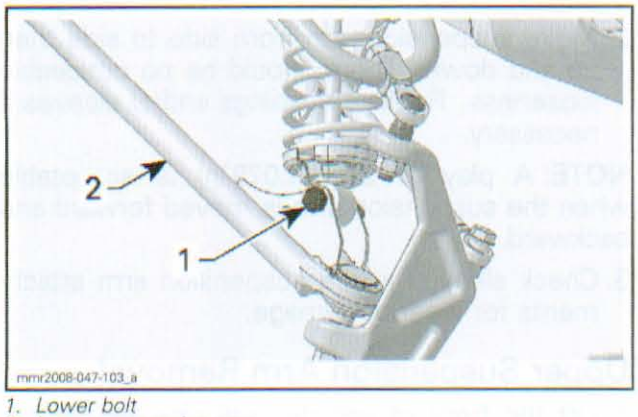

1. *Lower bolt*
2. *Lower suspension arm*

Remove the shock absorber.

Shock Absorber Disassembly

To remove spring from the shock absorber, use the SPRING COMPRESSOR TOOL (P/N 529 036 007).

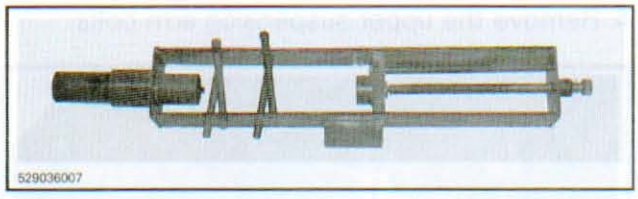

Place the tool in a vise.

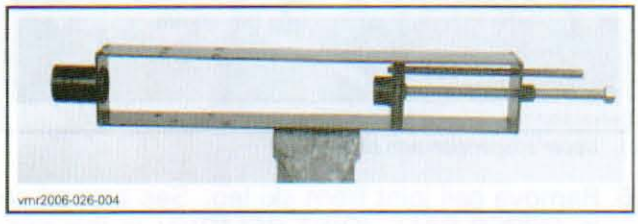

On models with a screw type adjuster, unscrew the adjuster completely.

Position the shock absorber in the tool and install the spring compressor pins.



TYPICAL

Lock the end of the shock absorber with a bolt or a steel pin.

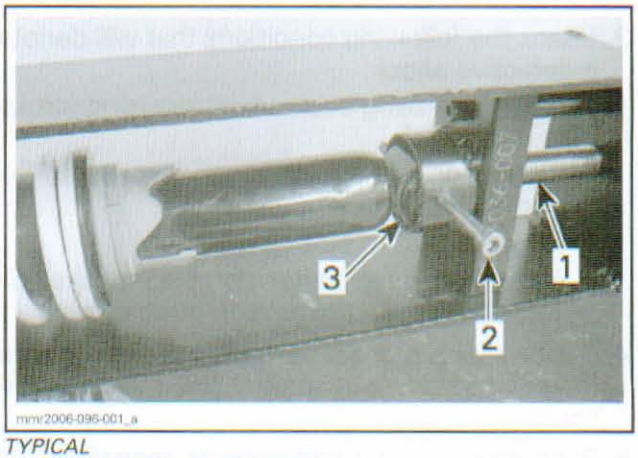

TYPICAL
1. *Spring compressor tool screw*
2. *Locking device (bolt or steel pin)*
3. *Shock absorber end*

Tighten the spring compressor tool screw until the spring is sufficiently compressed to remove spring locking devices.

Remove spring stopper then release the spring compressor tool screw.



TYPICAL

Shock Absorber Inspection

Inspect the spring for damage. Replace if necessary.

Inspect shock as following:

Hydraulic Shock

1. Examine shock for leaks. Extend and compress the piston at least 5 complete strokes with its rod upward.
2. After, check that shock moves smoothly and with uniform resistance over its entire stroke.

NOTE: For the first 5 complete strokes, it could be normal to note uneven resistance.

www.midwestmanuals.com

3. Check the following conditions that will denote a defective shock:
   - A skip or a hang back when reversing stroke at mid travel.
   - Seizing or binding condition except at extreme end of either stroke.
   - Oil leakage.
   - A gurgling noise, after completing one full compression and extension strokes.
4. If suspecting a shock is freezing, place it in a freezer (temperature below 0°C (32°F)) for 4 hours.
5. Push down on rod and note its resistance. If shock is frozen it will be much more difficult to compress than one in normal condition.
6. Renew if any faults are present.

Gas Shock

NOTE: Because of gas pressure, strong resistance is felt when compressing shock.

To inspect shock operation, or if suspecting an internal leak between oil chamber and gas chamber, check shock as follows:

1. Install shock in a vise clamping on its bottom eyelet with its rod upward. Verify the compression stroke when the rod is fully extended.
2. Completely push down the shock rod then release.
3. The shock should extend unassisted. Rod must come out at a steady speed. If speed suddenly increases particularly at end of extension, replace shock.
4. If suspecting a shock is freezing, place it in a freezer (temperature below 0°C (32°F)) for 4 hours.
5. Push down on rod and note its resistance. If shock is frozen it will be much more difficult to compress than one in normal condition.

Shock Absorber Assembly and Installation

For assembly and installation, reverse the disassembly and removal procedures.

NOTE: Always install shock valve outwards when applicable.

UPPER SUSPENSION ARM

Upper Suspension Arm Inspection

1. Check suspension arm for distortion or damage. Replace if necessary.
2. Move suspension arm from side to side then up and down. There should be no noticeable looseness. Replace bushings and/or sleeves if necessary.

NOTE: A play of 2 mm (.079 in) is acceptable when the suspension arm is moved forward and backward.

3. Check sleeves inside suspension arm attachments for wear or damage.

Upper Suspension Arm Removal

1. Lift the front of vehicle until skis are off the ground.
2. Remove muffler and tuned pipe. Refer to *EXHAUST SYSTEM* section.
3. Remove shock absorber upper bolt. See procedure in *SHOCK ABSORBER REMOVAL* in this section.
4. Remove the upper suspension arm bolts.

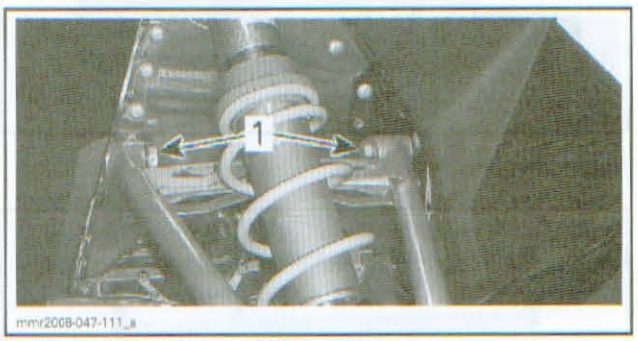

1. Upper suspension arm bolts

5. Remove ball joint from ski leg. See procedure in *UPPER BALL JOINT REMOVAL* in this section.

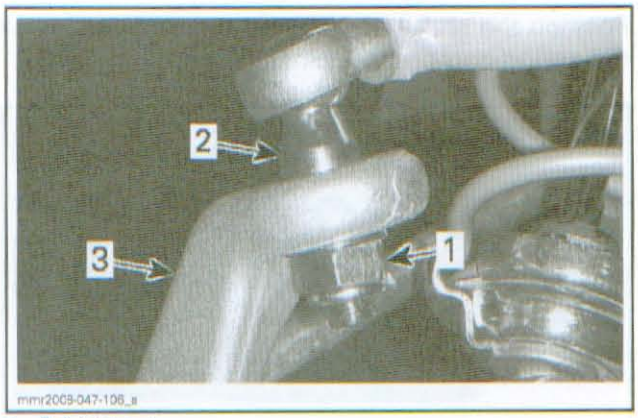

1. Ball joint nut
2. Ball joint
3. Ski leg

6. Remove upper suspension arm.

www.midwestmanuals.com

Upper Suspension Arm Installation

The installation is the reverse of the removal procedure.

UPPER BALL JOINT

Upper Ball Joint Inspection

Check both upper ball joints for damage, pitting, looseness and roughness. If so, replace with a new one.

Upper Ball Joint Removal

1. Position upper suspension arm so that ball joint becomes parallel with ski leg.
2. Detach tie-rod end from ski leg.

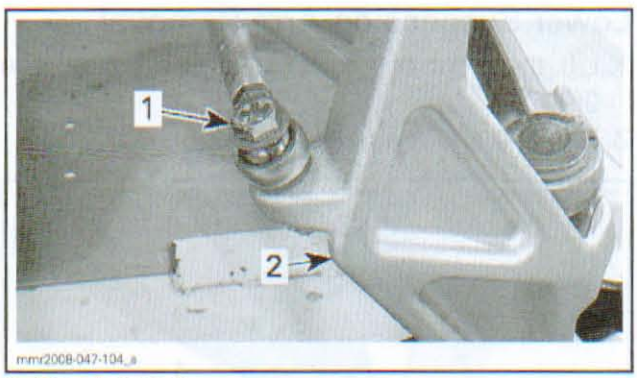

1. Tie-rod end bolt
2. Ski leg

3. Unscrew nut retaining ball joint housing to upper suspension arm.

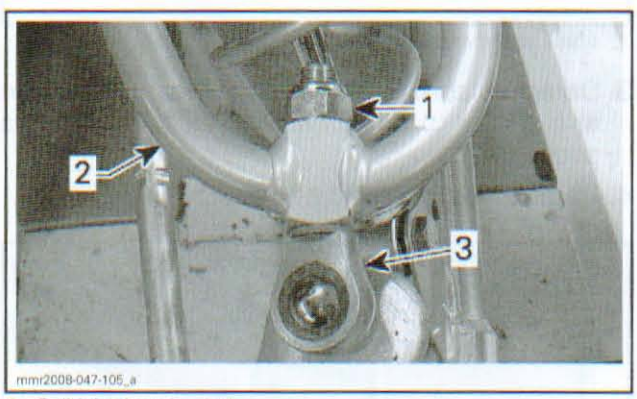

1. Ball joint housing nut
2. Upper suspension arm
3. Ball joint housing

4. Remove nut securing ball joint to ski leg.

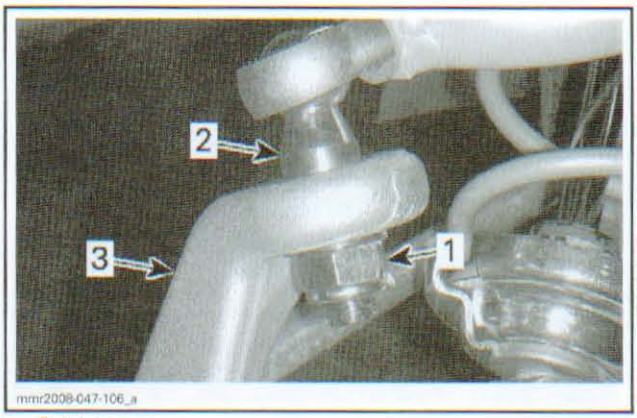

1. Ball joint nut
2. Ball joint
3. Ski leg

5. Install the BALL JOINT REMOVER (P/N 529 035 827) and detach ball joint from ski leg.





6. Remove ball joint.

Upper Ball Joint Installation

The installation is the reverse of the removal procedure. However, pay attention to the following.

1. Install ball joint washers as shown.

www.midwestmanuals.com

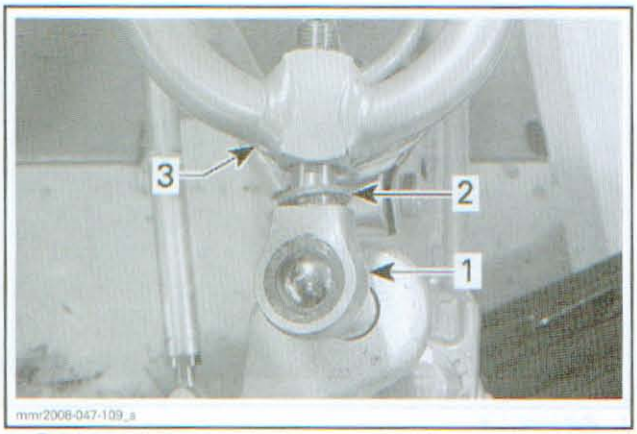

1. Ball joint housing
2. Washer
3. Upper suspension arm

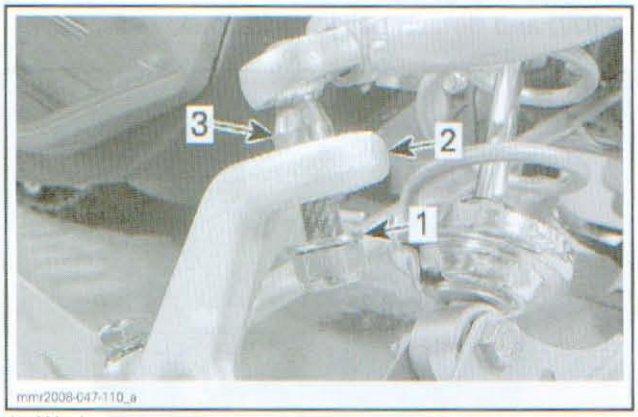

1. Washer
2. Ski leg
3. Ball joint

2. Tighten nuts to 48 N•m (35 lbf•ft).

Ensure ball joint has the proper angle as shown. The ball joint must be parallel to ski leg tab. This mounting position corresponds to 10° ± 3° angle from upper arm.

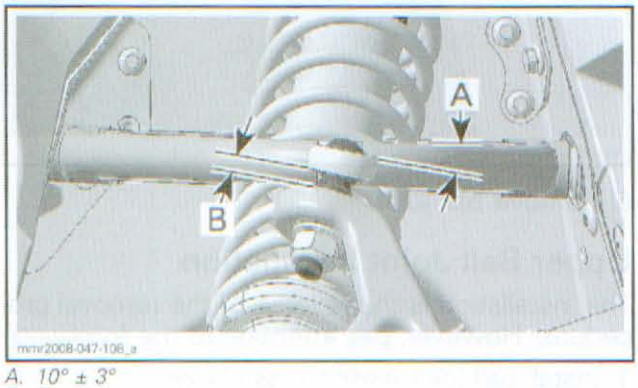

A. 10° ± 3°
B. Parallel

LOWER SUSPENSION ARM

Lower Suspension Arm Inspection

1. Check suspension arm for distortion or damage. Replace if necessary.
2. Detach shock absorber and stabilizer bar from lower suspension arm. Move suspension arm from side to side then up and down. There should be no noticeable loose. Replace bushings and/or sleeves if necessary.

NOTE: A play of 2 mm (.079 in) is acceptable when the suspension arm is moved forward and backward.

3. Check sleeves inside suspension arm attachments for wear or damage.

Lower Suspension Arm Removal

1. Lift the front of vehicle until skis are off the ground.
2. Remove shock absorber lower bolt.



1. Shock absorber lower bolt

3. Detach stabilizer link from lower suspension arm. Refer to *STABILIZER BAR* further in this section.
4. Remove lower ball joint nuts.

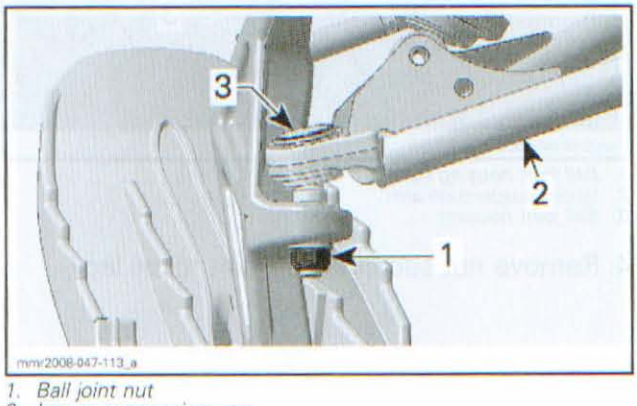

1. Ball joint nut
2. Lower suspension arm
3. Lower ball joint

www.midwestmanuals.com

5. Using a suitable ball joint remover, detach lower ball joint from ski leg.
6. Remove suspension arm bolts.

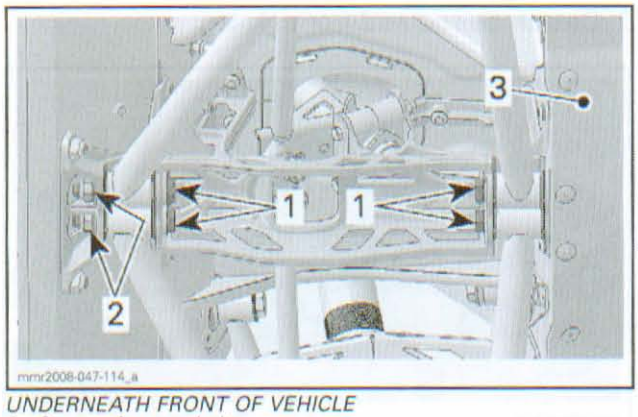

UNDERNEATH FRONT OF VEHICLE
1. *Suspension arm bolts*
2. *Rear nuts*
3. *Bottom pan*

NOTE: To hold rear nuts, modify a 15 mm opened wrench as shown.



7. Remove lower suspension arm from vehicle.

Lower Suspension Arm Installation

The installation is the reverse of the removal procedure. However, pay attention to the following.

1. Install a wear plate over bushings.
2. Position the wear plate on top.
3. Fold all tabs against bushings.

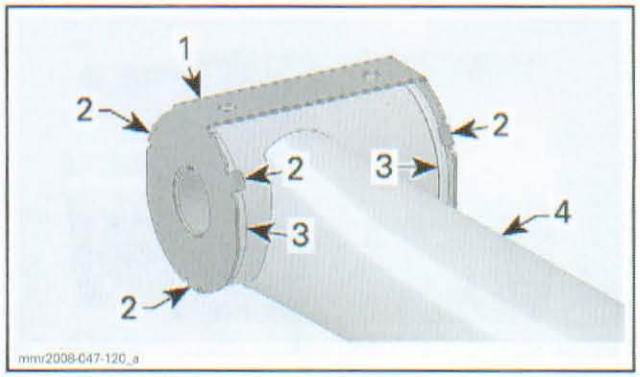

1. *Wear plate*
2. *Wear plate tabs*
3. *Bushings*
4. *Lower suspension arm*

Install all other removed parts.

LOWER BALL JOINT

Lower Ball Joint Inspection

Inspect ball joint end for damage. Ensure it's moving freely without play. Replace ball joints as required.

Lower Ball Joint Removal

1. Remove the *LOWER SUSPENSION ARM*, see procedure in this section.
2. Remove circlip securing ball joint to suspension arm.

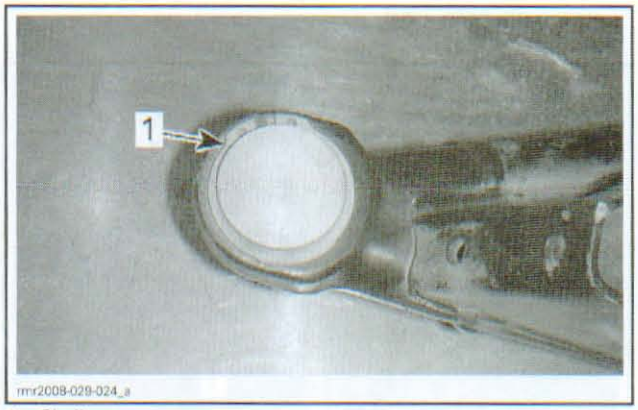

1. *Circlip*

3. Using a press and the BALL JOINT REMOVER (P/N 529 036 121), press ball joint out of the lower suspension arm.

www.midwestmanuals.com



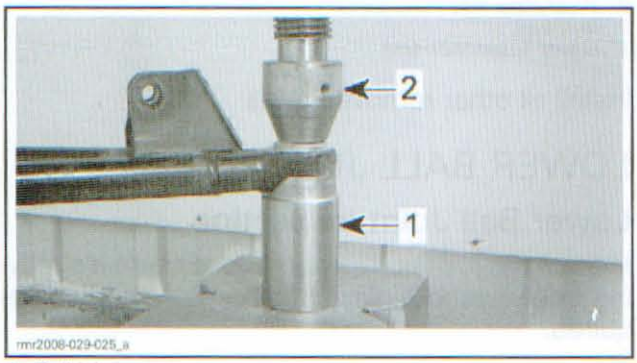

1. *Ball joint remover*
2. *Press*

Lower Ball Joint Installation

1. Using a press, the BALL JOINT REMOVER (P/N 529 036 121) and the BALL JOINT INSTALLER (P/N 529 035 975), press ball joint into the suspension arm end.

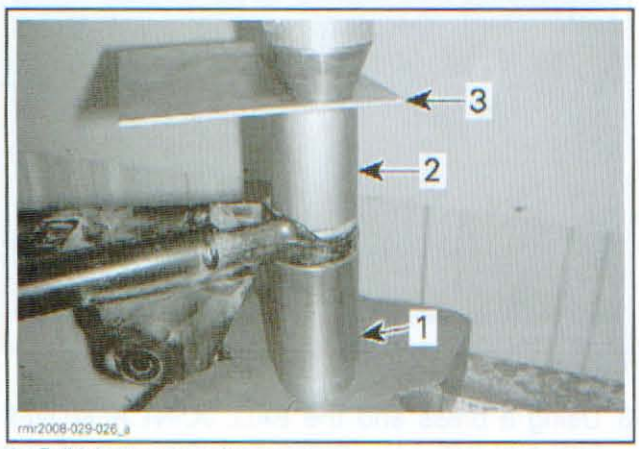

1. *Ball joint remover support*
2. *Ball joint installer*
3. *Steel plate*

2. Reinstall the circlip. If the circlip seems loose, replace it with a new one.
3. Install the *LOWER SUSPENSION ARM* on vehicle, see procedure in this section.

SKI LEG

Ski Leg Removal

1. Remove ski from ski leg.
2. Detach tie-rod end from ski leg.

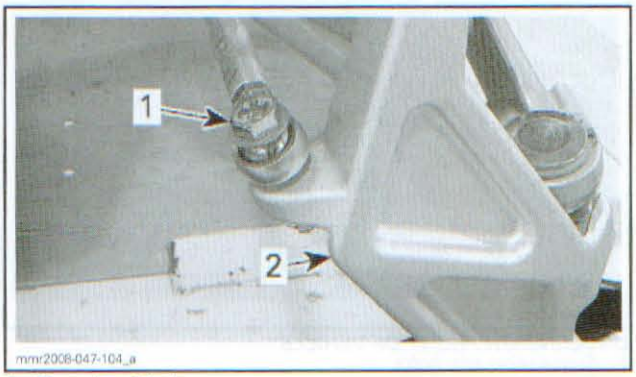

1. *Tie-rod end bolt*
2. *Ski leg*

3. Remove upper and lower ball joints from ski leg. Refer to *UPPER BALL JOINT* and *LOWER BALL JOINT* in this section.

Ski Leg Installation

The installation is the reverse of the removal procedure.

STABILIZER BAR

Stabilizer Bar Removal

1. Remove the RH side panel. Refer to *BODY* section.
2. Remove the muffler. Refer to *EXHAUST SYSTEM* section.
3. Remove the cap at the bottom of the RH side bottom pan.

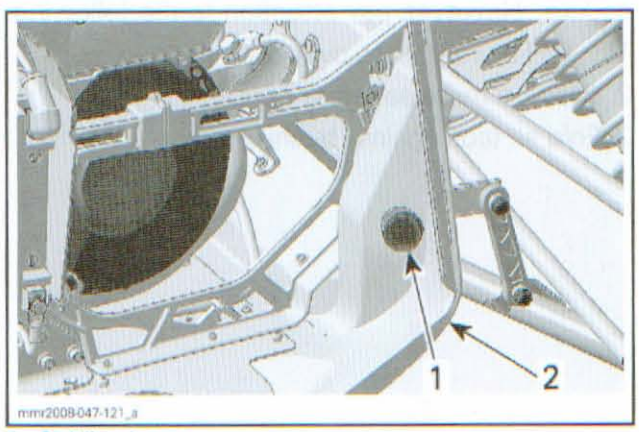

1. *Stabilizer bar cap*
2. *RH side bottom pan*

www.midwestmanuals.com

4. Remove bolts securing stabilizer links to lower suspension arms.

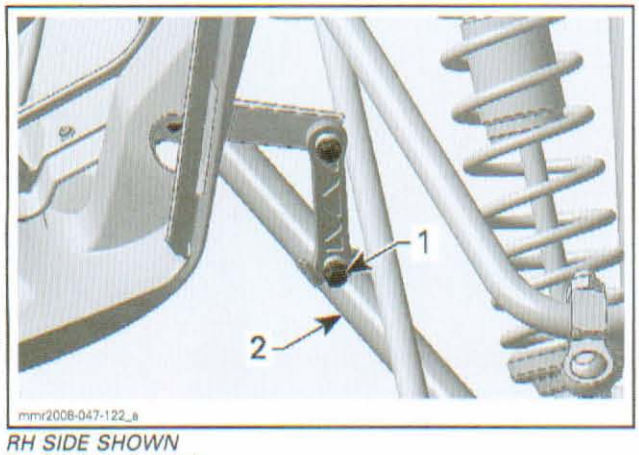

RH SIDE SHOWN
1. *Stabilizer link bolt*
2. *Lower suspension arm*

5. Unscrew stabilizer lever bolts.
6. Remove stabilizer levers from stabilizer bar.

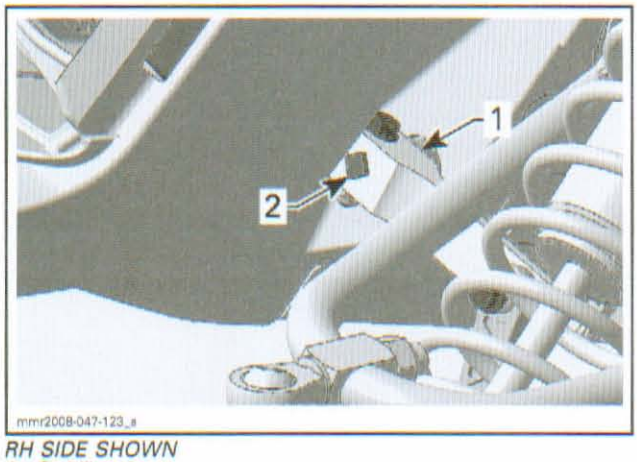

RH SIDE SHOWN
1. *Stabilizer lever*
2. *Stabilizer bar*

7. Slide stabilizer bar out of vehicle.

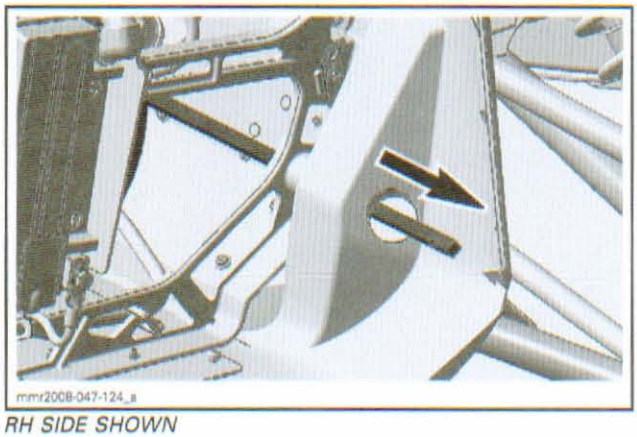

RH SIDE SHOWN

Stabilizer Bar Installation

The installation is the reverse of the removal procedure.

www.midwestmanuals.com

www.midwestmanuals.com

REAR SUSPENSION

SERVICE TOOLS

Description	Part Number	Page
FLOATING PISTON PULLER	529 035 901	530–531
FLOATING PISTON REMOVER TOOL	529 035 907	524
GAS FILL TOOL KIT	503 190 102	522, 528, 531
GAS SHOCK VALVE TOOL (TIRE VALVE TYPE)	529 035 570	528
HPG SHOCK HOLDING TOOL	529 035 769	522
SHOCK WRENCH	529 035 727	523
VACUUM/PRESSURE PUMP	529 021 800	524

SERVICE PRODUCTS

Description	Part Number	Page
LOCTITE 271 (RED)	293 800 005	525
MOLYKOTE G-N	420 297 433	526
PULLEY FLANGE CLEANER	413 711 809	529–531
SHOCK ABSORBER OIL	293 600 035	527, 531
SUSPENSION SYNTHETIC GREASE	293 550 033	542

www.midwestmanuals.com

RAILS AND IDLERS WHEELS

GSX, GTX and MX Z

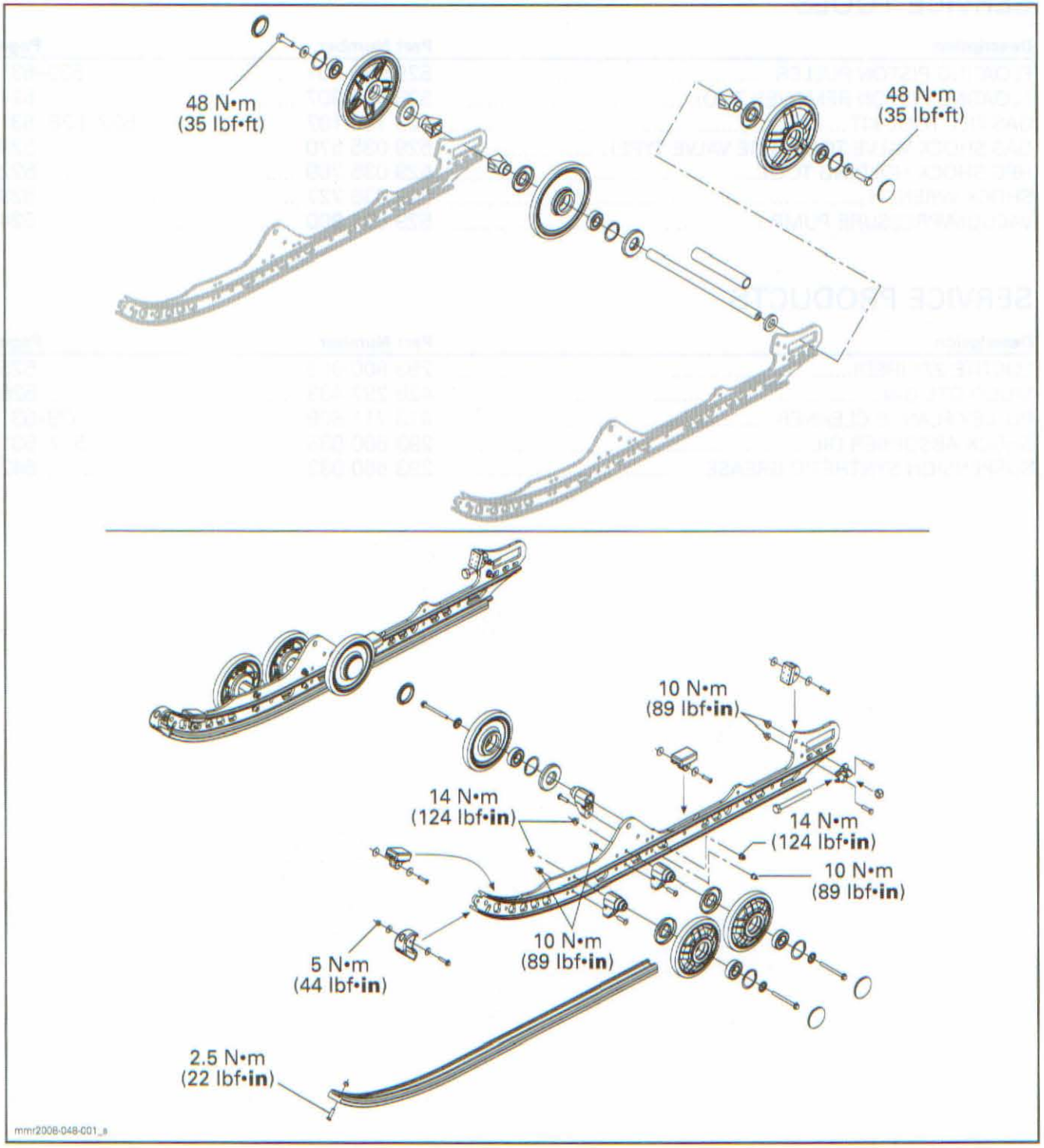

www.midwestmanuals.com

SUMMIT

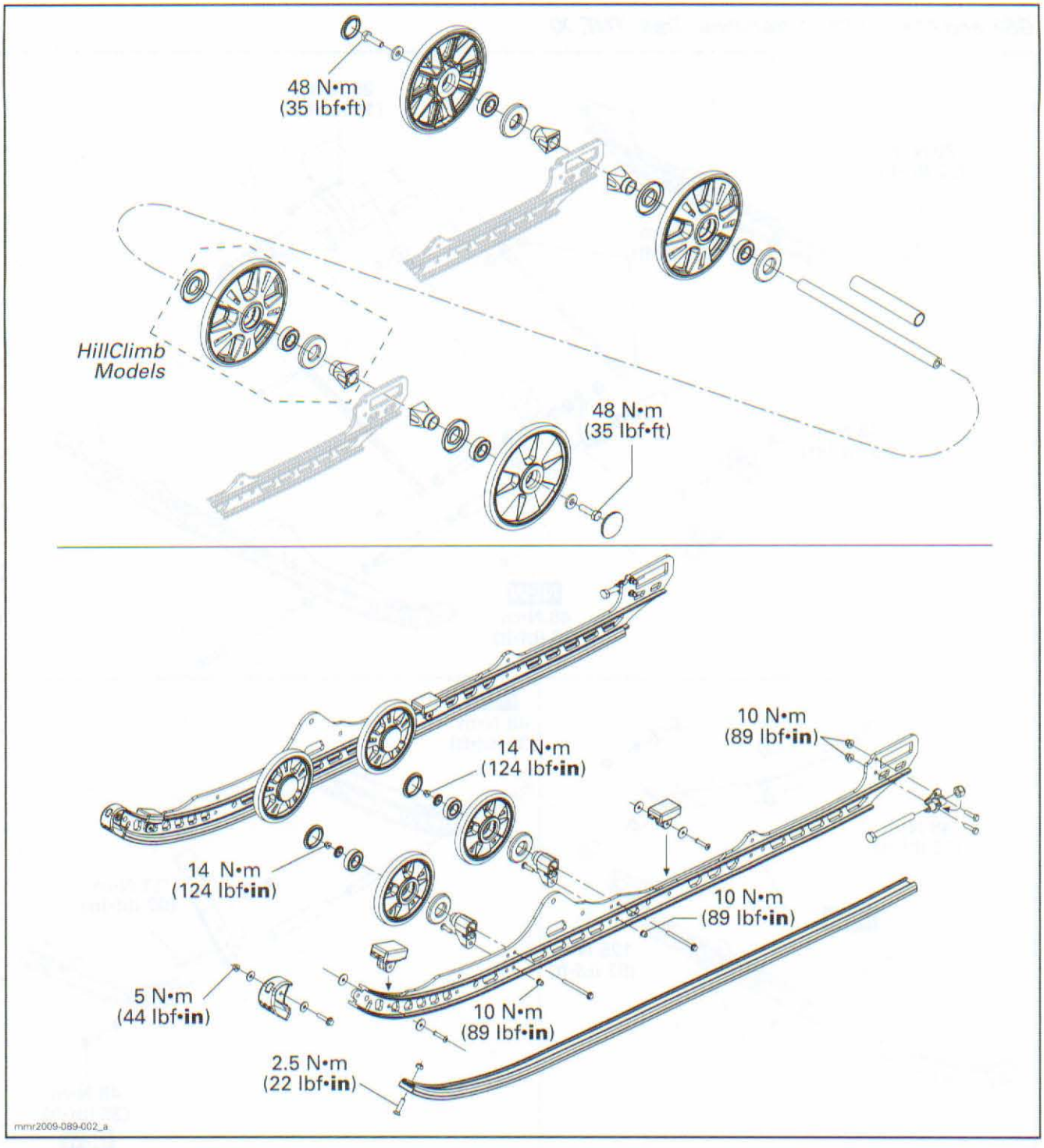

www.midwestmanuals.com

FRONT ARM

GSX and MX Z (50th, Adrenaline, Trail, TNT, X)

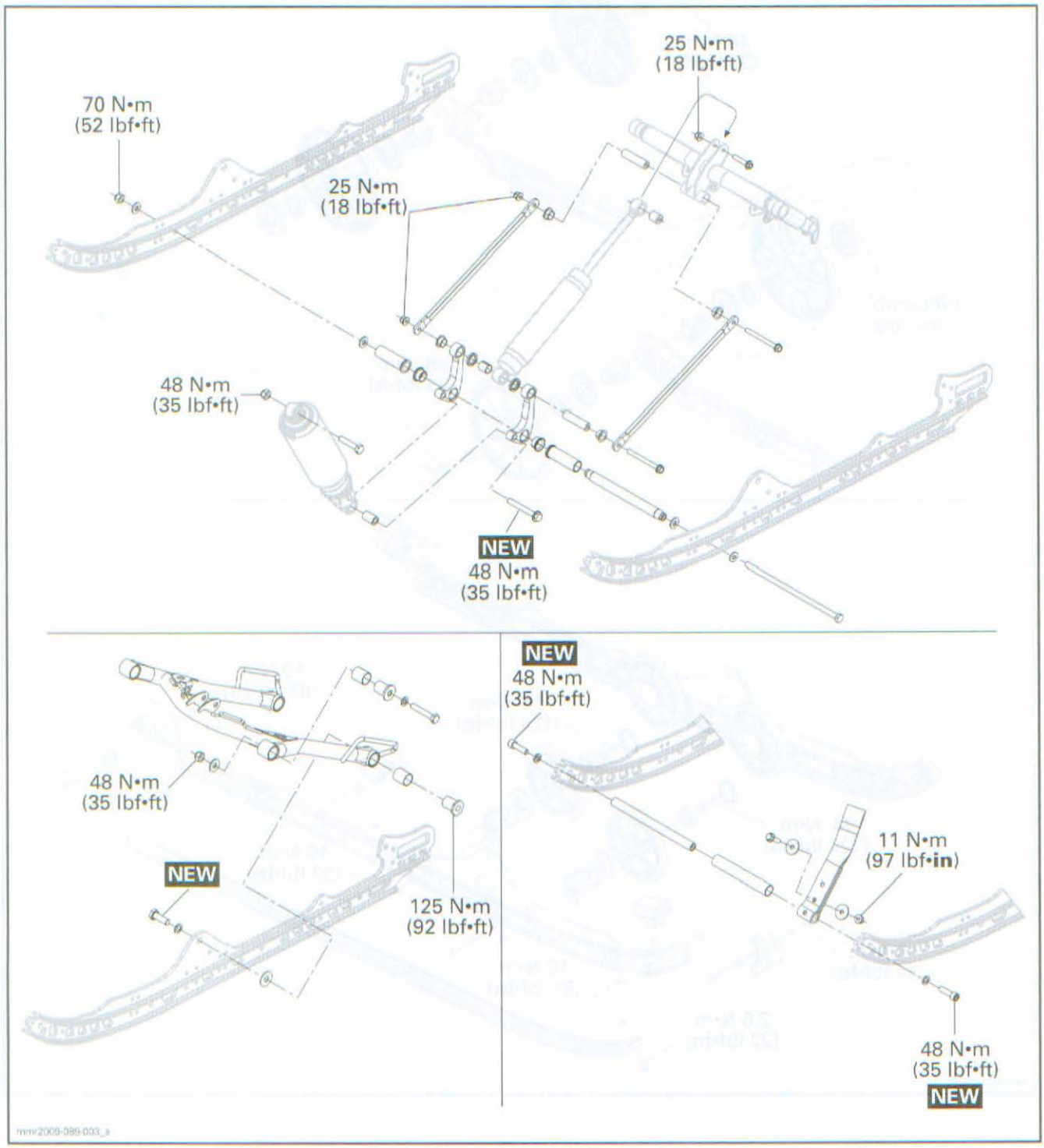

www.midwestmanuals.com

GTX and MX Z (Renegade, Renegade X)

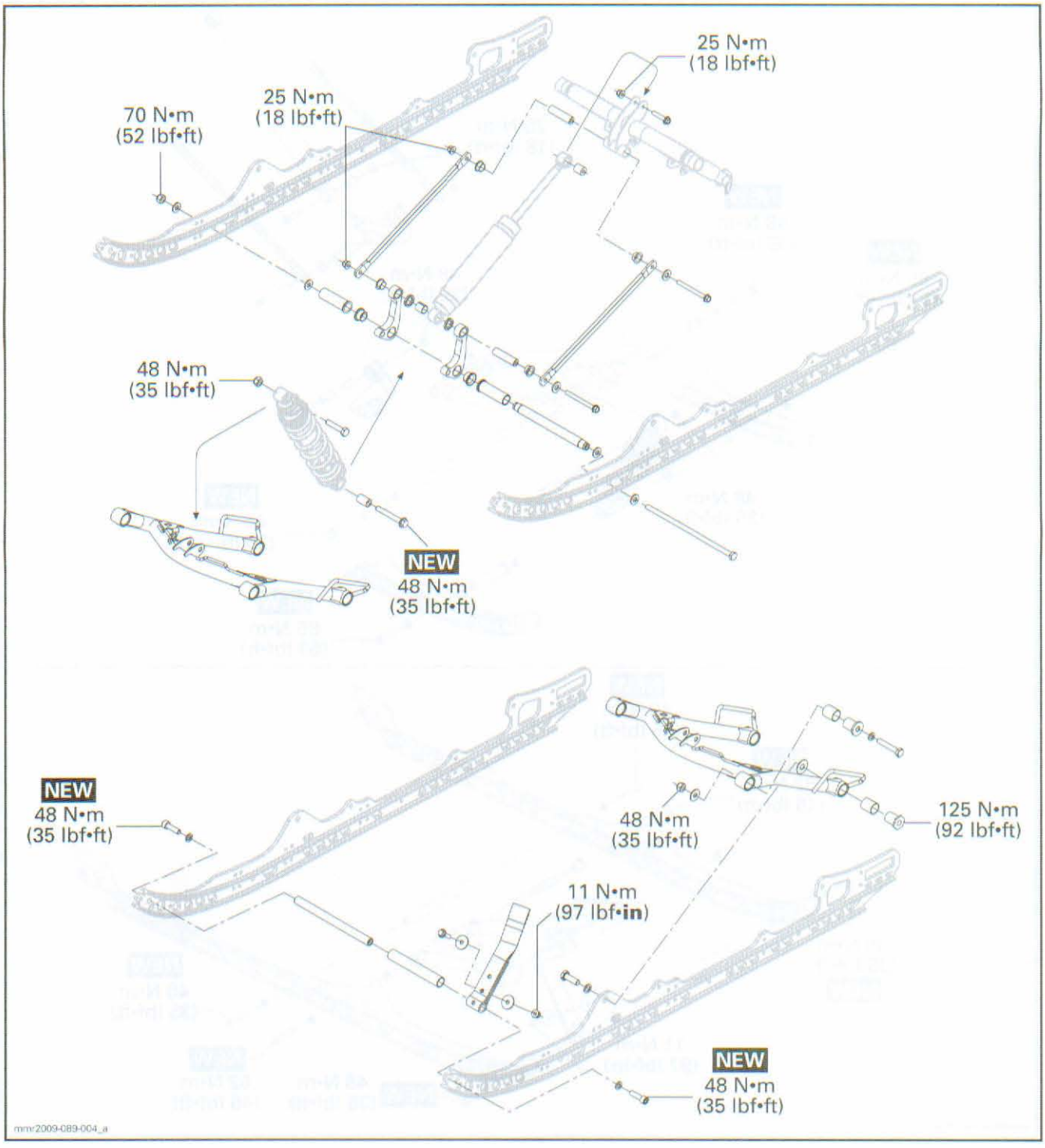

www.midwestmanuals.com

SUMMIT

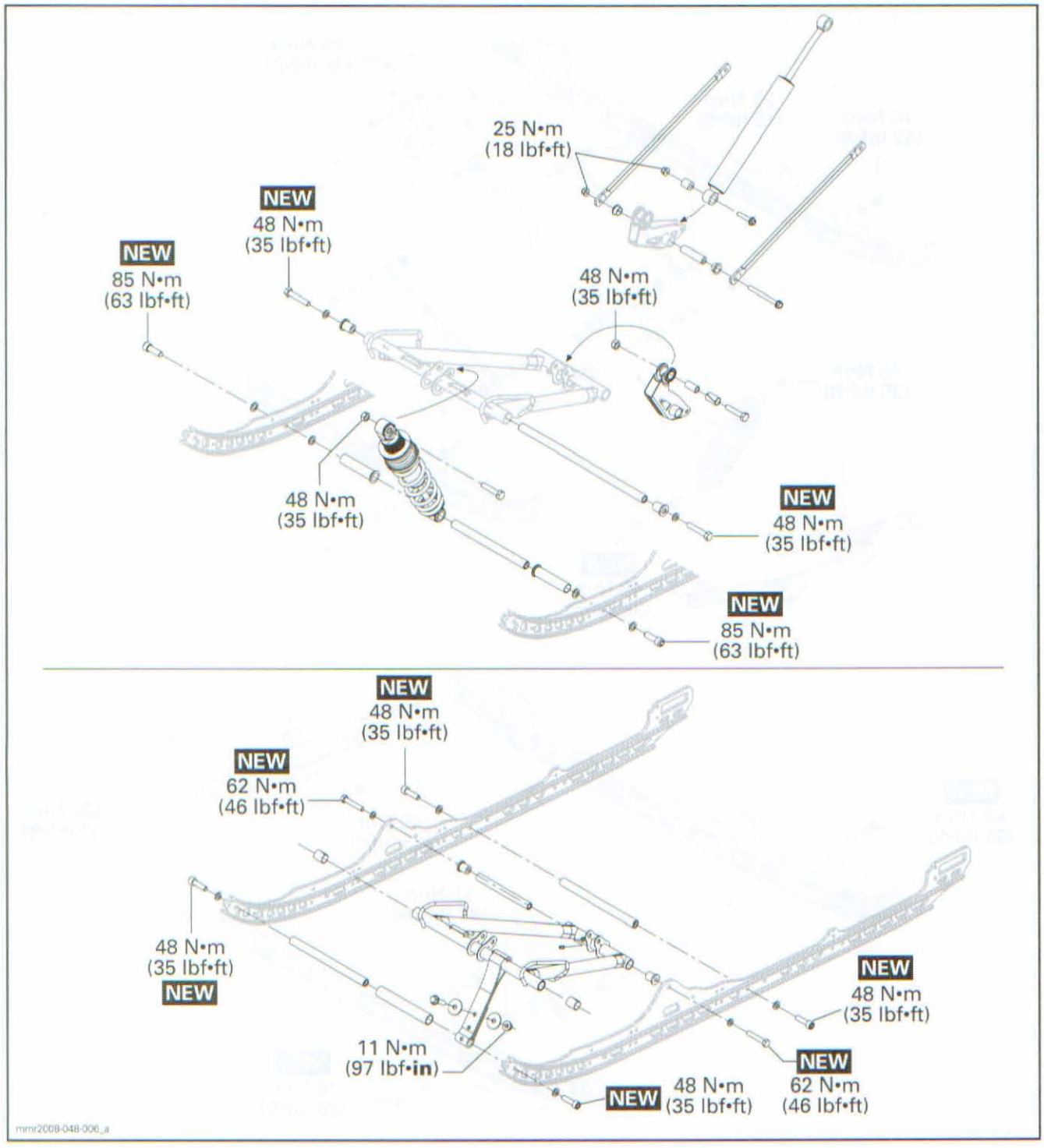

www.midwestmanuals.com

REAR ARM

GSX, GTX and MX Z

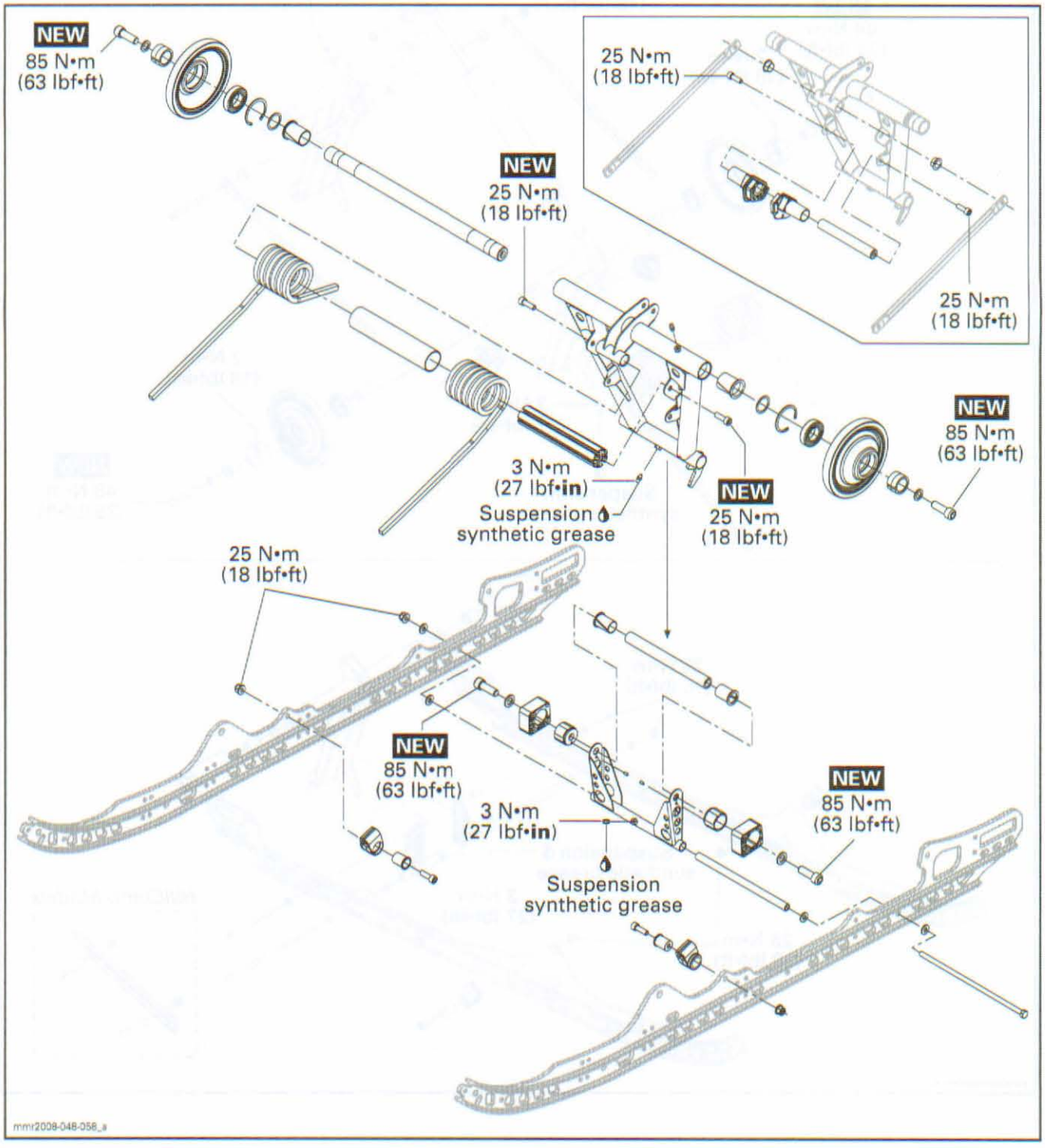

www.midwestmanuals.com

SUMMIT

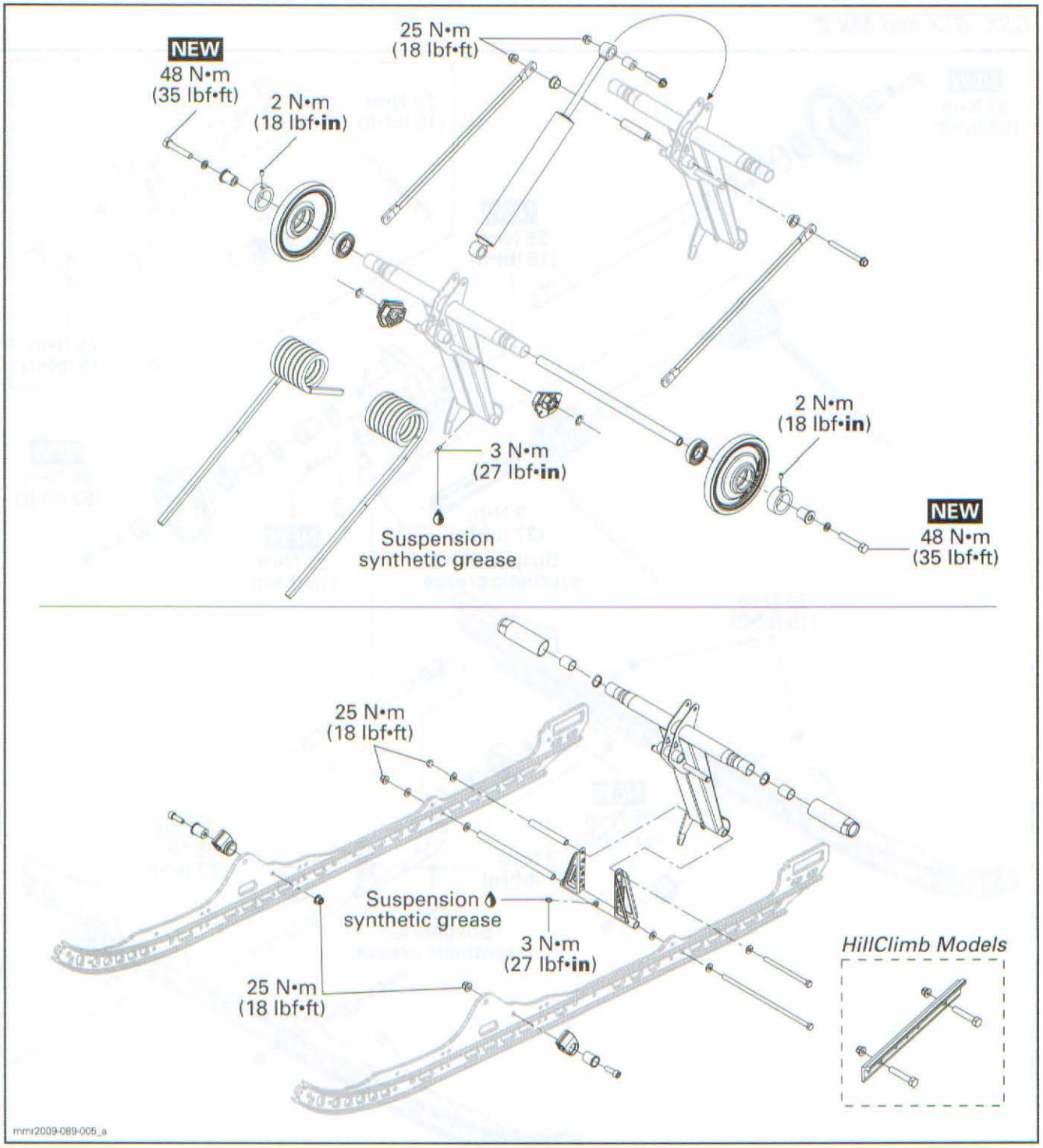

www.midwestmanuals.com

SHOCK ABSORBERS

GSX, GTX and MX Z

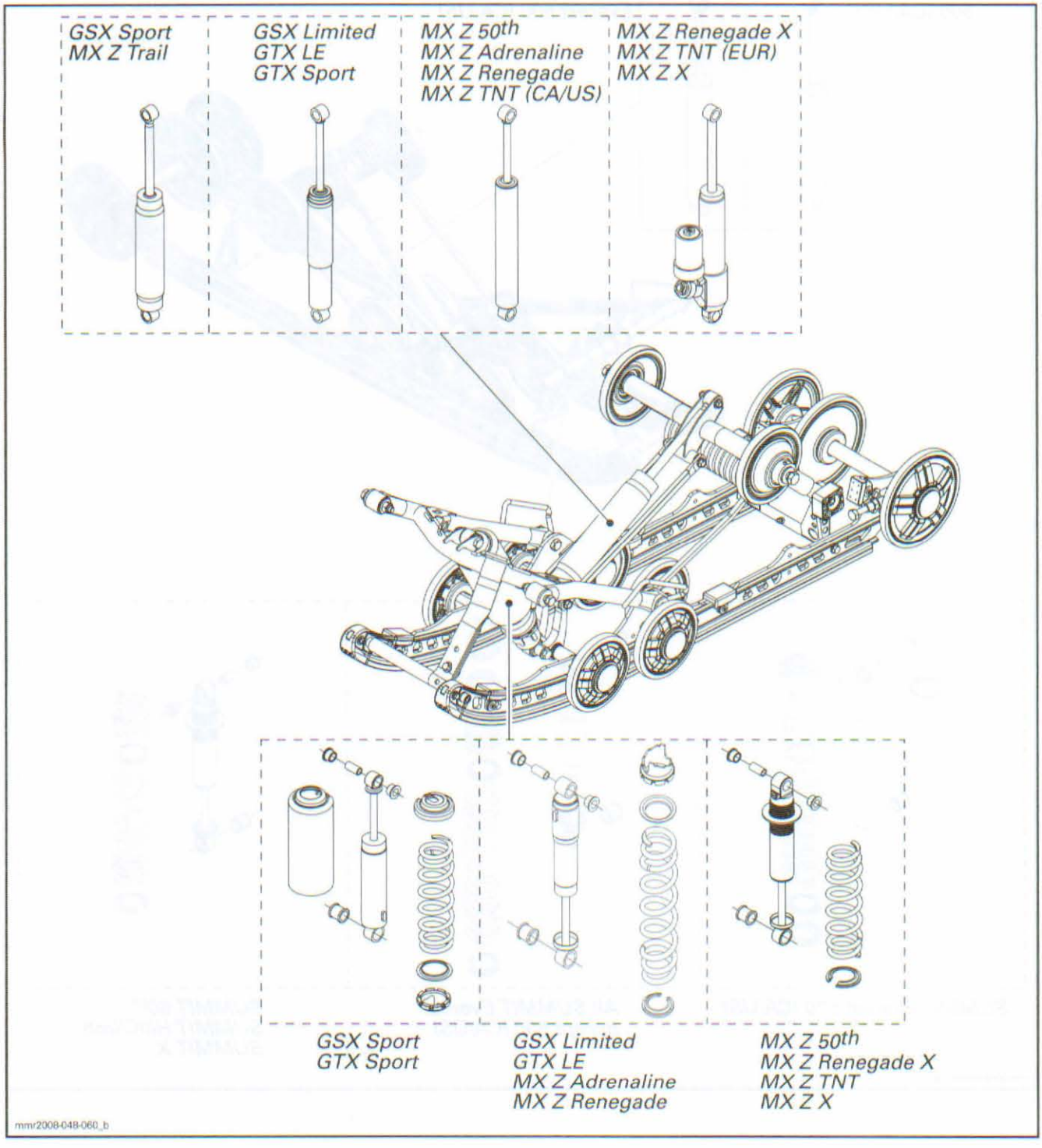

www.midwestmanuals.com

SUMMIT

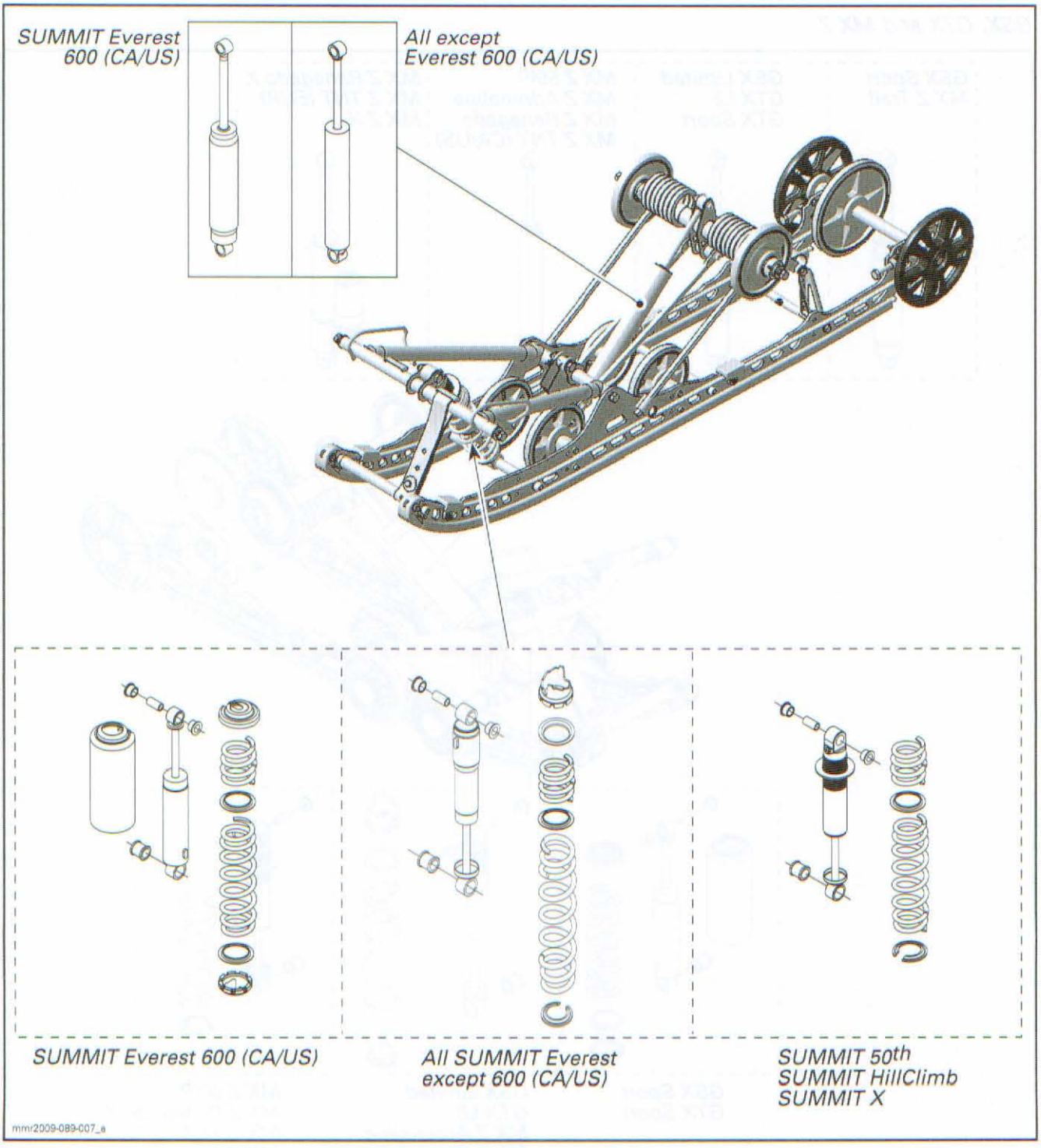

www.midwestmanuals.com

GENERAL

NOTE: Refer to *TECHNICAL SPECIFICATIONS* to identify the snowmobile suspension type.

During assembly/installation, use torque values and service products as in the exploded views.

Clean threads before applying a threadlocker. Refer to *SELF-LOCKING FASTENERS* and *LOCTITE APPLICATION* at the beginning of this manual for complete procedure.

⚠ WARNING

Torque wrench tightening specifications must be strictly adhered to.
Locking devices (e.g.: locking tabs, cotter pins, etc.) must replaced with new ones.

PROCEDURES

NOTE: Many parts can be changed with rear suspension in place. When specified, refer to *SUSPENSION ASSEMBLY* to remove rear suspension from vehicle.

SUSPENSION ASSEMBLY

Suspension Assembly Removal

1. Lift rear of vehicle and support it off the ground.
2. Completely loosen track tension.
3. Remove and discard rear arm bolts from chassis. Use the following procedure to remove bolts easily.
   3.1 Unscrew one of the socket screws securing the rear arm to frame.

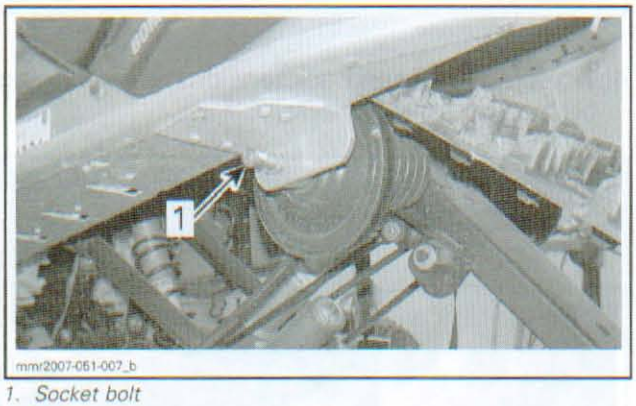

1. Socket bolt

   3.2 Replace this socket screw with an hexagonal bolt (longer than socket screw) and a nut.
   3.3 Screw in the hexagonal bolt by approximately 7 turns.
   3.4 Hold the hexagonal bolt and tighten locking nut.

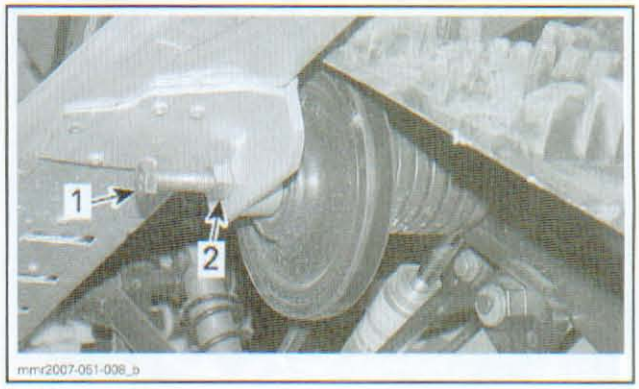

1. Hexagonal bolt
2. Locking nut

   3.5 Unscrew the socket screw on the other side then unlock nut and remove the hexagonal bolt.
4. Remove bolts retaining front arm to tunnel.

NOTE: On **SUMMIT models**, discard the front arm bolts.

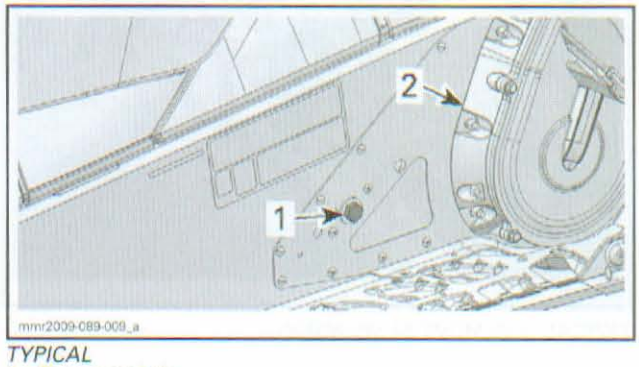

TYPICAL
1. Front arm bolt
2. Chaincase

5. Lift rear of vehicle until front arm as enough clearance to pass underneath tunnel.

www.midwestmanuals.com

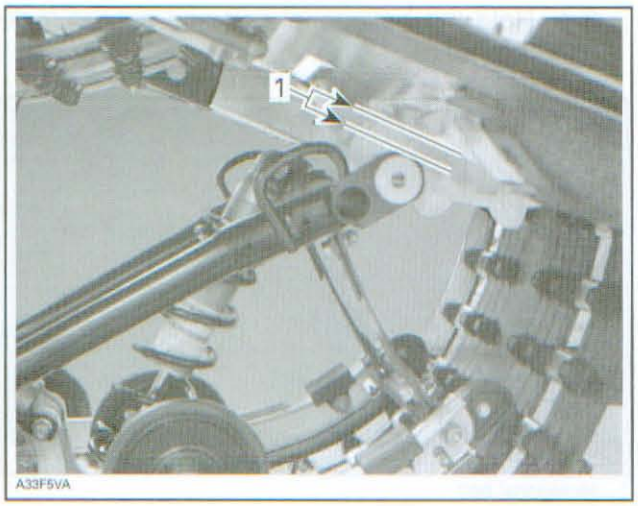

TYPICAL
1. Enough clearance

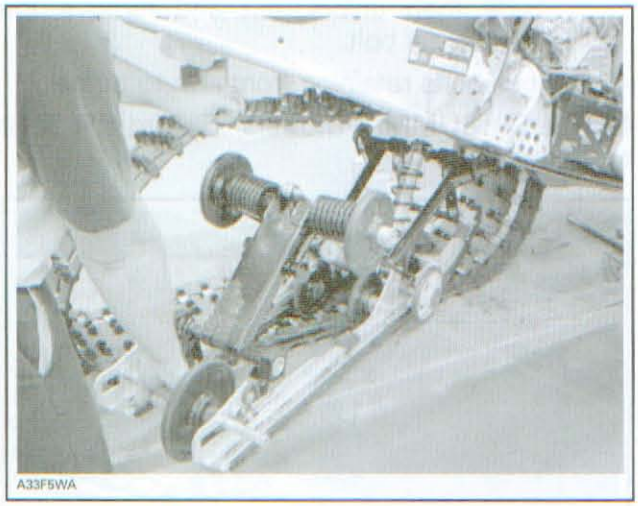

TYPICAL — REMOVE SUSPENSION

Suspension Assembly Installation

Installation is the reverse of removal procedure. Pay attention to the following details.

1. Inspect track thoroughly before reinstalling suspension. Refer to *TRACK* section.
2. Install suspension into track with front portion first.
3. Install front arm bolts. On **SUMMIT models**, install **NEW** bolts.
4. Torque them to 48 N•m (35 lbf•ft).
5. Install **NEW** rear arm bolts and tighten them.

REAR ARM BOLTS TIGHTENING	
GSX, GTX and MX Z	85 N•m (63 lbf•ft)
SUMMIT	48 N•m (35 lbf•ft)

6. Adjust track tension.

REAR AXLE

Rear Axle Removal

1. Lift rear of vehicle and support it off the ground.
2. Remove rear idler wheel caps.

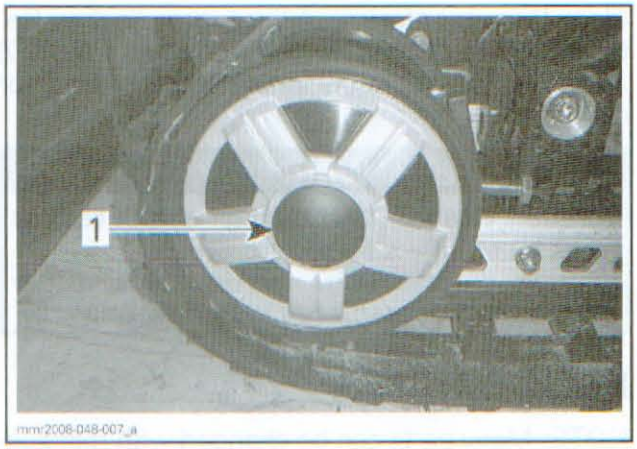

1. RH rear idler wheel cap

3. Loosen rear axle screws (one each side).

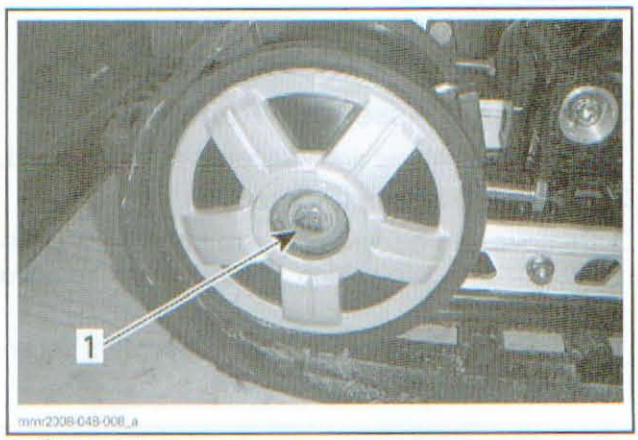

1. RH rear axle screw

4. Completely loosen track tension by unscrewing both adjustment screws.

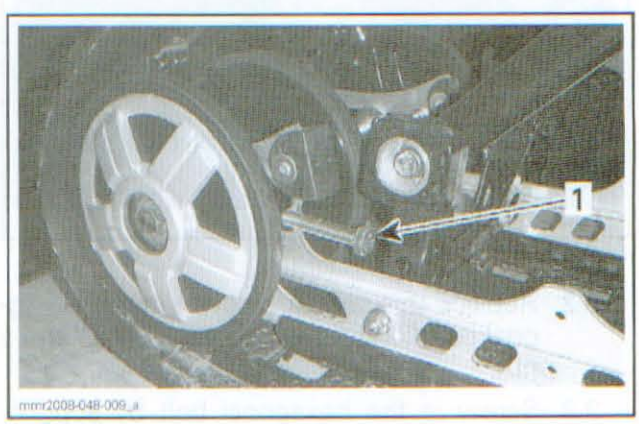

1. RH adjustment screw

www.midwestmanuals.com

5. Remove both rear axle screws.
6. Remove rear idler wheels, seals and wheel spacers.

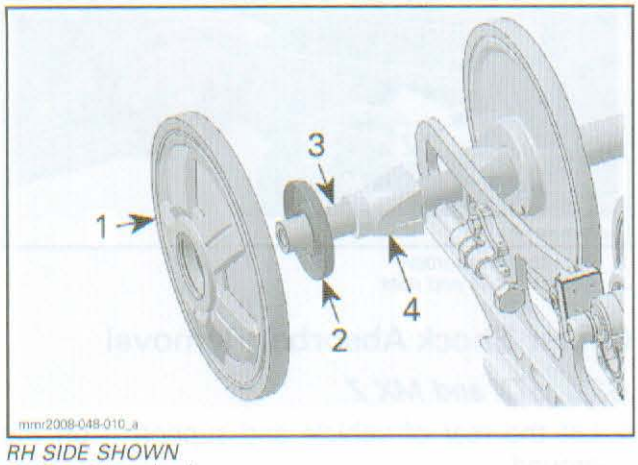

RH SIDE SHOWN
1. *Rear idler wheel*
2. *Seal*
3. *Rear axle*
4. *Wheel spacer*

7. Pull out the rear axle.

Rear Axle Installation

Installation is reverse of removal procedure. However, pay attention to the following.

1. Make sure to position all parts correctly.

SUMMIT HillClimb

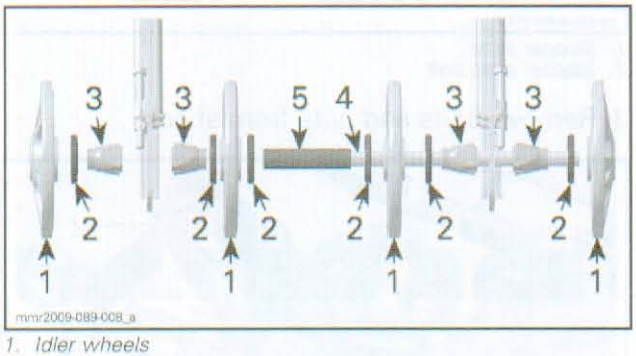

1. *Idler wheels*
2. *Seals*
3. *Wheel spacers*
4. *Rear axle*
5. *Rear axle spacer*

All Other Models

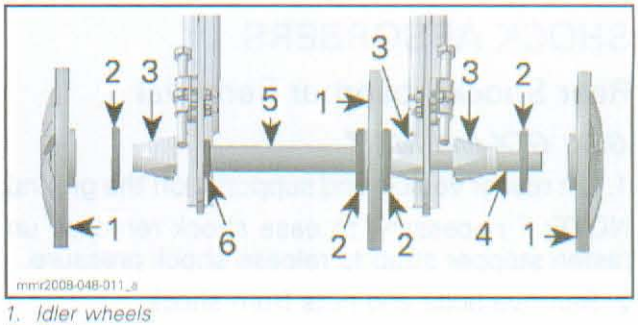

1. *Idler wheels*
2. *Seals*
3. *Wheel spacers*
4. *Rear axle*
5. *Rear axle spacer*
6. *Washer*

2. Position wheel spacers with a flat side up and a groove in front of tensioner screw.

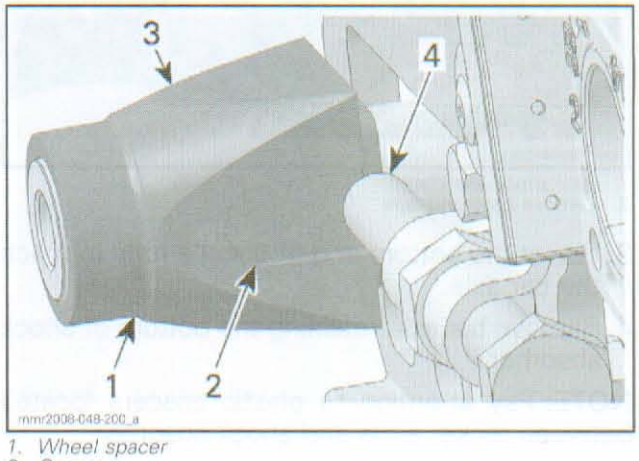

1. *Wheel spacer*
2. *Groove*
3. *Flat side*
4. *Tensioner screw*

NOTE: When tightening rear axle, make sure each wheel spacer protuberance is engaged into runner slot.

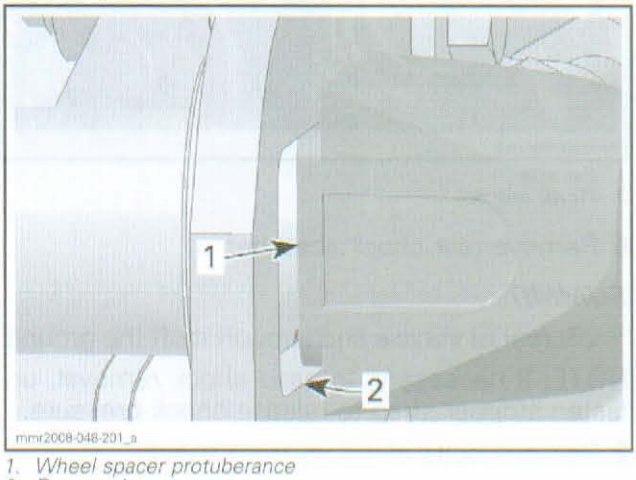

1. *Wheel spacer protuberance*
2. *Runner slot*

www.midwestmanuals.com

3. Adjust track tension. Refer to *TRACK* section.

SHOCK ABSORBERS

Rear Shock Absorber Removal

GSX, GTX and MX Z

1. Lift rear of vehicle and support it off the ground.

NOTE: If necessary, to ease shock removal, unfasten stopper strap to release shock pressure.

2. Remove bolts and nuts from shock.

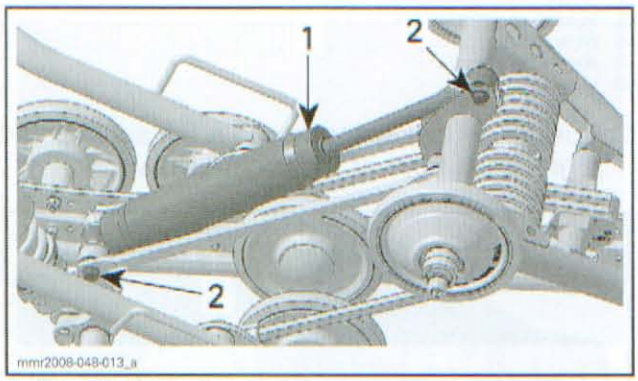

1. *Rear shock absorber*
2. *Remove bolts and nuts*

3. Lower the bottom end of throttle rods to reach the bar axle.
4. Remove bar axle retaining the bottom of shock absorber.

NOTE: Pay attention to plastic spacers located between rocker arms and shock absorber.

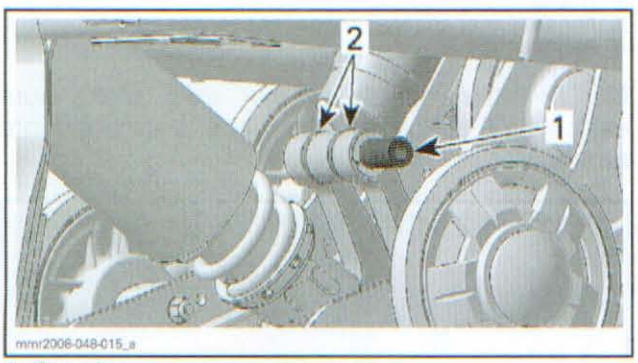

1. *Bar axle*
2. *Plastic spacers*

5. Remove rear shock absorber.

SUMMIT

1. Lift rear of vehicle and support it off the ground.

NOTE: If necessary, to ease shock removal, unfasten stopper strap to release shock pressure.

2. Remove bolts and nuts from shock.

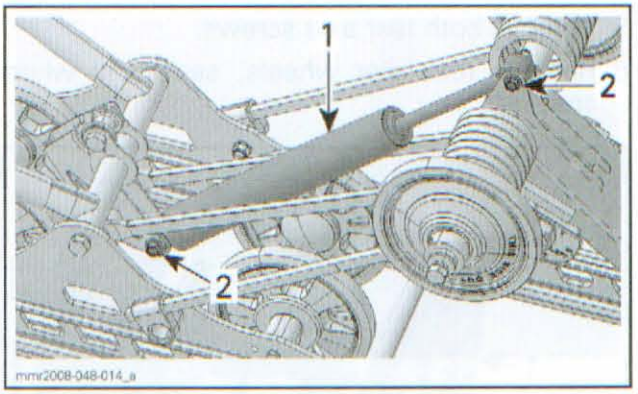

1. *Rear shock absorber*
2. *Remove bolts and nuts*

Center Shock Absorber Removal

GSX, GTX and MX Z

1. Lift the rear of vehicle and support it off the ground.
2. Unfasten stopper strap.

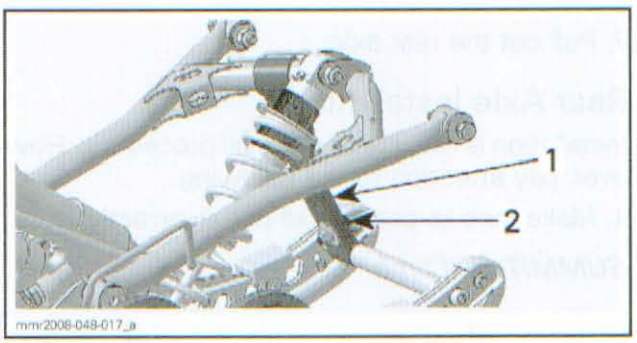

1. *Stopper strap*
2. *Stopper strap bolt*

3. Remove bolts and nuts from shock.

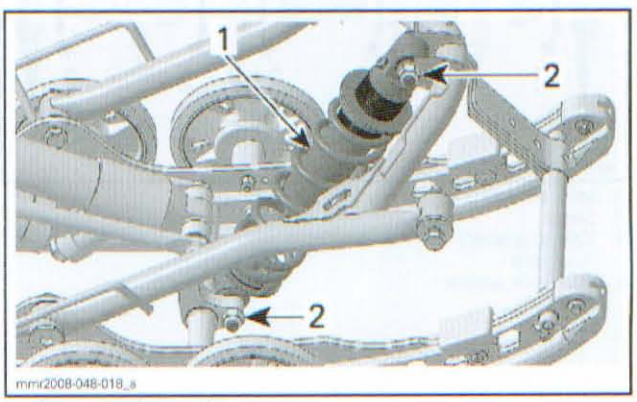

1. *Front shock absorber*
2. *Remove bolts and nuts*

SUMMIT

1. Lift the rear of vehicle and support it off the ground.
2. Unfasten stopper strap.

www.midwestmanuals.com

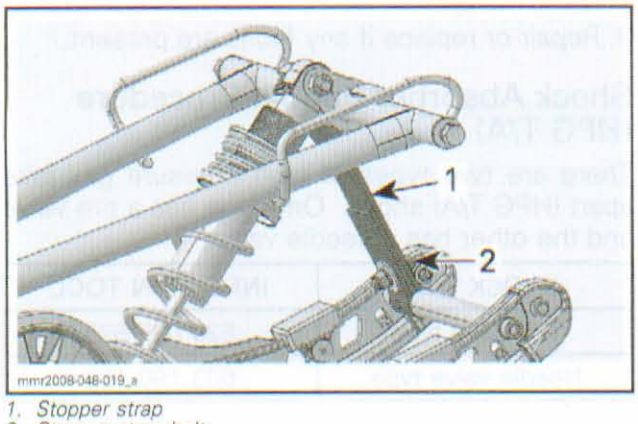

1. *Stopper strap*
2. *Stopper strap bolt*

3. Remove upper shock absorber bolt.

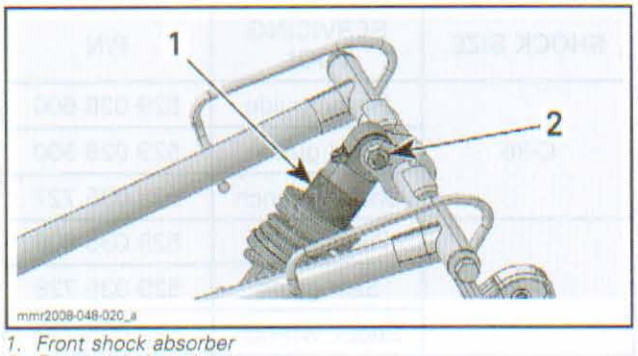

1. *Front shock absorber*
2. *Remove bolt and nut*

4. Remove and discard socket screws (one each side) securing shock shaft.

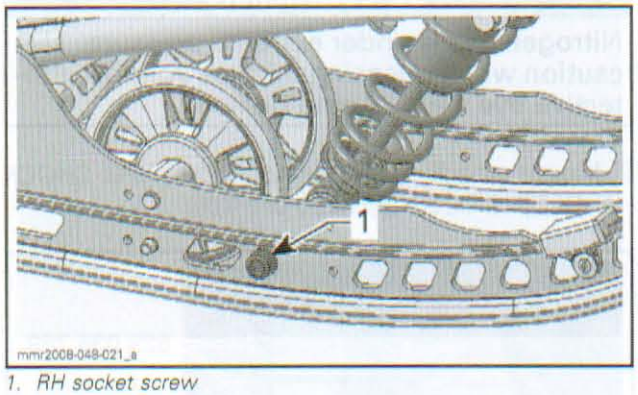

1. *RH socket screw*

5. Remove shock absorber from vehicle.
6. Remove bushings and shock shaft from shock absorber.

Shock Absorber Inspection

Hydraulic Shock

1. Secure the shock body end in a vise with its rod upward.

NOTICE Do not clamp directly on shock body.

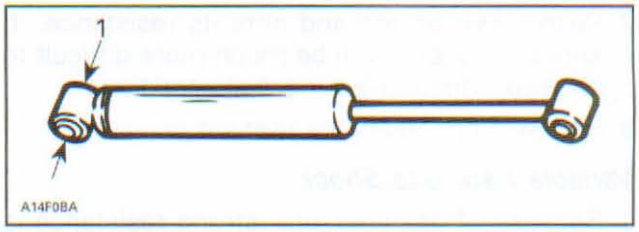

1. *Clamp*

2. Examine shock for leaks. Extend and compress the piston at least 5 complete strokes with its rod upward.
3. After, check that shock moves smoothly and with uniform resistance over its entire stroke.

NOTE: For the first 5 complete strokes, it could be normal to note uneven resistance.

4. Check the following conditions that will denote a defective shock:
   - A skip or a hang back when reversing stroke at mid travel.
   - Seizing or binding condition except at extreme end of either stroke.
   - Oil leakage.
   - A gurgling noise, after completing one full compression and extension strokes.
5. If suspecting a shock is freezing, place shock in a freezer (temperature below 0°C (32°F)) for 4 hours.
6. Push down on rod and note its resistance. If shock is frozen it will be much more difficult to compress than one in normal condition.
7. Renew if any faults are present.

Gas Shock Except Variable Rate

1. Because of gas pressure, strong resistance is felt when compressing shock.
2. To inspect shock operation, or if suspecting an internal leak between oil chamber and gas chamber, check shock as follows:
3. Install shock in a vise clamping on its bottom eyelet with its rod upward. Verify the compression stroke when the rod is fully extended.
4. Completely push down the shock rod then release.
5. The shock should extend unassisted. Rod must come out at a steady speed. If speed suddenly increases particularly at end of extension, replace shock.
6. If suspecting a shock is freezing, place shock in a freezer (temperature below 0°C (32°F)) for 4 hours.

www.midwestmanuals.com

7. Push down on rod and note its resistance. If shock is frozen it will be much more difficult to compress than one in normal condition.
8. Renew if any faults are present.

Variable Rate Gas Shock

1. Because of gas pressure, strong resistance is felt when compressing shock.
2. To inspect shock operation, or if suspecting an internal leak between oil chamber and gas chamber, check shock as follows:
3. Install shock in a vise clamping on its bottom eyelet with its rod upward. Verify the compression stroke when the rod is fully extended.
4. Push down the shock rod. The feeling should be stiff for around the first 25 mm (1 in), then softer from 25 mm to 50 mm (1 in to 2 in) and stiffer again after that. This stiff/soft/stiff phenomenon shows the normal operation of shock.
5. When released, the shock should extend unassisted. The rod speed coming out will go slow - faster and slow again due to the VR zone.
6. If suspecting a shock is freezing, place shock in a freezer (temperature below 0°C (32°F)) for 4 hours.
7. Push down on rod and note its resistance. If shock is frozen it will be much more difficult to compress than one in normal condition.
8. Renew if any faults are present.

HPG T/A Shock

1. Because of gas pressure, strong resistance is felt when compressing shock.
2. To inspect shock operation, or if suspecting an internal leak between oil chamber and gas chamber, check shock as follows:
3. Install shock in a vise clamping on its bottom eyelet with its rod upward. Verify the compression stroke when the rod is fully extended.
4. Completely push down the shock rod then release.
5. The shock should extend unassisted. Rod must come out at a steady speed. If speed suddenly increases particularly at end of extension, replace shock.
6. If suspecting a shock is freezing, place shock in a freezer (temperature below 0°C (32°F)) for 4 hours.
7. Push down on rod and note its resistance. If shock is frozen it will be much more difficult to compress than one in normal condition.
8. Repair or replace if any faults are present.

Shock Absorber Rebuilt Procedure (HPG T/A)

There are two types of high pressure gas take apart (HPG T/A) shock. One type has a tire valve and the other has a needle valve.

SHOCK TYPE	INFLATION TOOL
Tire valve type	529 035 570
Needle valve type	503 190 102

HPG T/A shocks come in two sizes. C-36 shock is 36 mm (1.417 in) in diameter and C-46 shock is 46 mm (1.811 in).

SHOCK SIZE	SERVICING TOOL	P/N
C-36	Piston guide	529 026 600
	Seal guide	529 026 500
	Shock wrench	529 035 727
C-46	Piston guide	529 035 608
	Seal guide	529 035 728
	Shock wrench	529 035 727

1. Release nitrogen (N) pressure on any HPG T/A shock with internal floating piston (IFP).

⚠ WARNING

Nitrogen gas is under extreme pressure. Use caution when releasing this gas volume. Protective eye wear should be used.

2. Mount shock in a vise with the HPG SHOCK HOLDING TOOL (P/N 529 035 769).

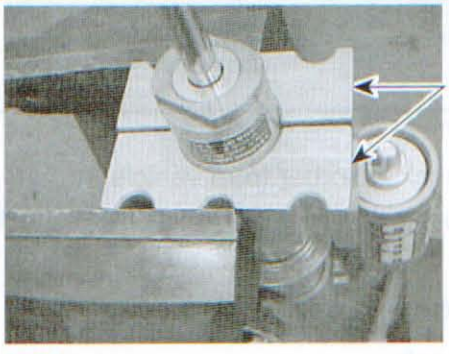

A32F2DA

3. Remove screw on top of valve. Place the needle guide of GAS FILL TOOL KIT (P/N 503 190 102) on the shock valve. Press the detent pin and

www.midwestmanuals.com

push forward the needle assembly very slowly towards rubber of needle valve. Push on shock tool valve center rod to release gas pressure.

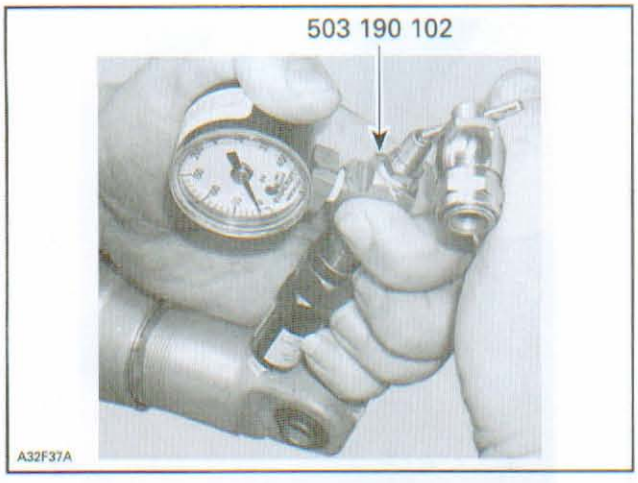

4. Remove tool from shock.

Screw Cap Type HPG T/A Shock

5. Using the SHOCK WRENCH (P/N 529 035 727), unscrew seal carrier.



TYPICAL

Snap Ring Cap Type HPG T/A Shock

6. Using a flat tool (small screwdriver or small chisel), pop-out the cap.



7. Compress the carrier to access and using a pick, remove the snap ring.

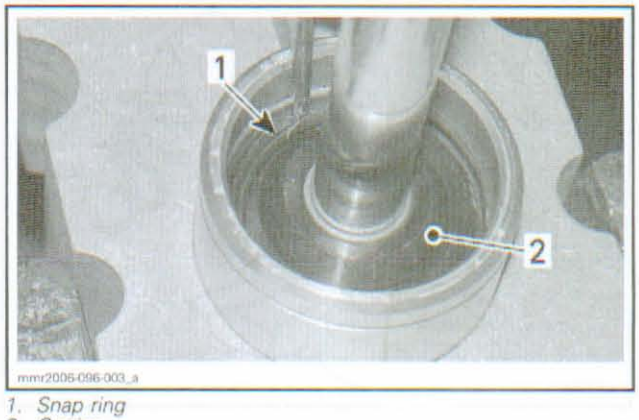

1. *Snap ring*
2. *Carrier*

All HPG T/A Shocks

8. With the seal carrier removed, slowly lift and remove damper rod assembly from the damper body.

NOTE: Remove damper rod assembly slowly to reduce oil spillage and prevent piston seal damage by damper body threads. Wrap the damper body with a shop cloth to capture possible overflow oil while removing the damper piston.

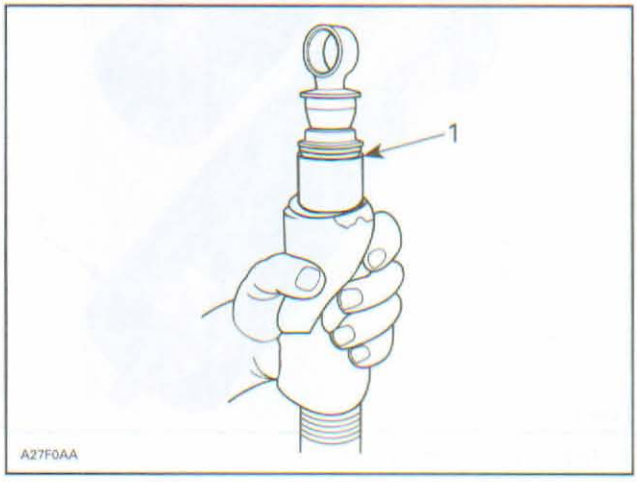

1. *Oil flows*

www.midwestmanuals.com

9. Discard old oil into storage container. Never reuse damper oil during shock rebuild.

HPG T/A Shock without Remote Reservoir

10. Remove valve core.
11. Place shock absorber in a position where opened extremity is blocked.
12. Using compressed air pressure, carefully remove floating piston from damper body. Hold shop cloth over damper body opening to catch released floating piston. Allow room for floating piston to leave damper body.

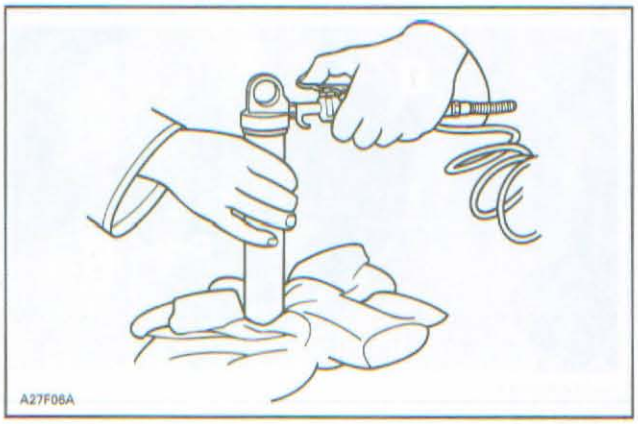

TYPICAL

HPG T/A Shock with Remote Reservoir

13. Install the FLOATING PISTON REMOVER TOOL (P/N 529 035 907) on shock absorber, as shown below.



1. Floating piston remover tool

14. Place shock absorber in a position where remote gas reservoir opened extremity is blocked. Refer to following photo.

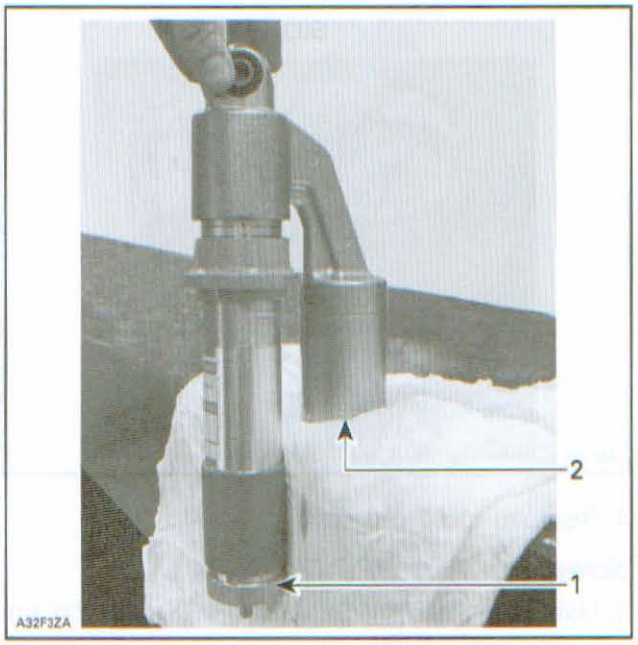

1. Tool
2. Reservoir opened extremity blocked by leaning on work bench

15. With the VACUUM/PRESSURE PUMP (P/N 529 021 800), pressurize shock absorber until remote reservoir piston pops-out.



NOTE: Use towels to prevent damaging remote reservoir piston when it pops-out.

16. Thoroughly clean, with a typical cleaning solution, and blow dry using low pressure air. Carefully inspect the damper body for any imperfections or signs of wear in the damper bore.
17. Replace damper body if wear is identified.

All HPG T/A Shocks

18. Holding the damper rod assembly in a bench vise by the eyelet section, begin piston and valve removal.

www.midwestmanuals.com

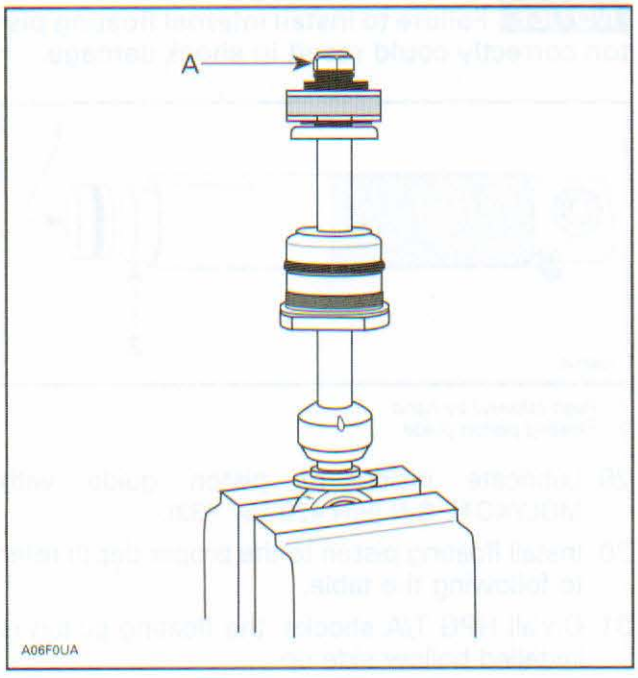

A. Remove damper rod nut

19. Always arrange parts removed in the sequence of disassembly.

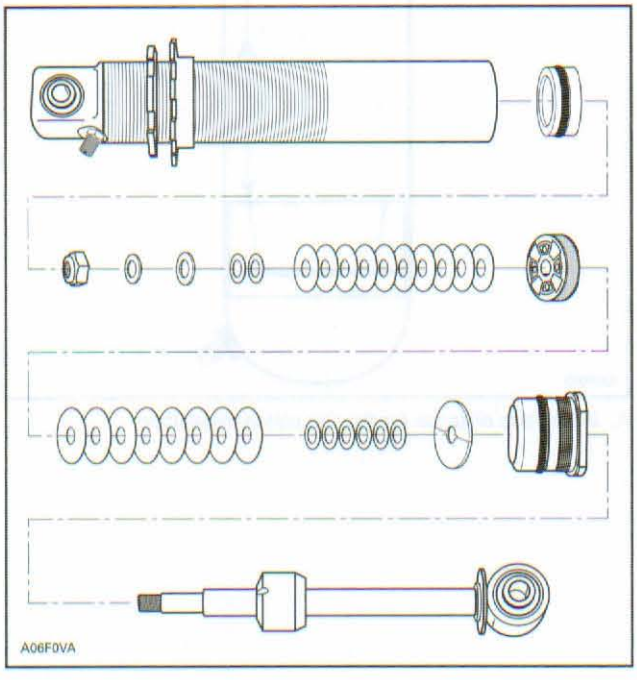

20. If revalving is to be done, it is imperative that you identify the original shim pack (size and number of shims). There is no need to remove seal carrier if only revalving is to be done.
21. Shims can be measured by using a vernier caliper or a micrometer.

NOTE: All shims should be carefully inspected and any bent or broken shims must be replaced for the shock to function properly.

22. After the new or replacement shim pack has been selected, reassemble in the reverse order of disassembly. Torque damper rod nut to 18 N•m (159 lbf•**in**).

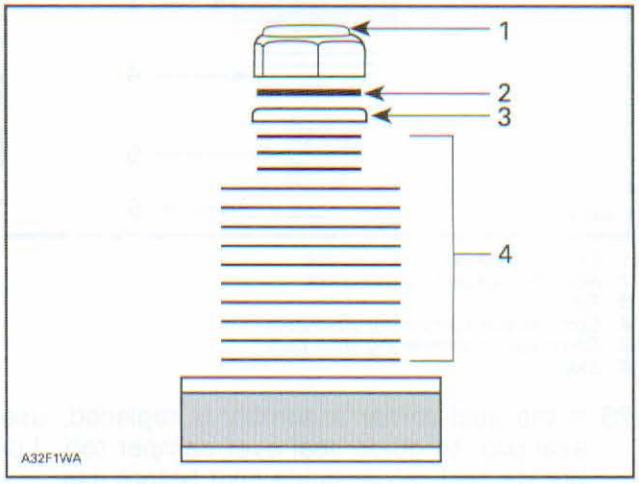

1. *Damper rod nut*
2. *Spacer*
3. *Stopper with its round edge facing nut*
4. *Shim pack*

23. As a general rule, we suggest replacing the damper rod nut after 4 rebuilds to ensure proper locking friction and the use of LOCTITE 271 (RED) (P/N 293 800 005) each time.

NOTICE Do not substitute the damper rod nut for non - O.E.M.

24. This (these) spacer washer(s) must be used as shown to ensure damper rod nut does not bottom out or contact shaft threads.
25. Rebound valve stopper with round edge facing nut.

NOTE: Rebound shim stack must not reach into threads of damper rod. Spacer under damper rod nut is used to prevent damper rod nut from bottoming on threads.

www.midwestmanuals.com

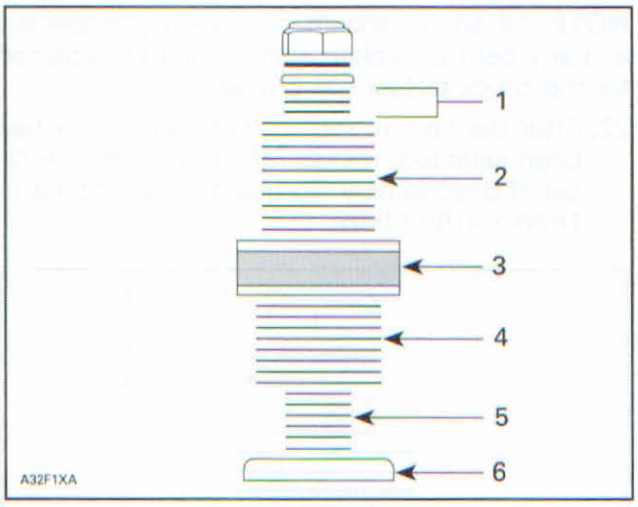

1. *Rebound dampening shim pack*
2. *Rebound dampening shim pack*
3. *Piston*
4. *Compression dampening shim pack*
5. *Compression dampening shim pack*
6. *Stopper*

26. If the seal carrier assembly is replaced, use seal pilot to guide seal over damper rod. Lubricate seal carrier guide pilot before use.

NOTICE Failure to use seal pilot will result in seal damage.

27. Reassemble damper rod assembly, taking care to properly assemble shim packs as required for your dampening needs. Ensure that the shaft piston is installed with the slits/larger intake holes facing the rebound shim stack.

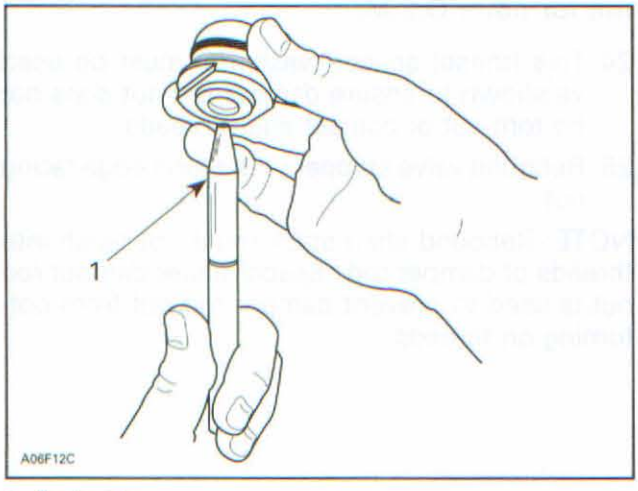

1. *Seal guide*

28. If internal floating piston has been removed, reinstall it into damper body (ensure that valve core has been removed). Use MOLYKOTE G-N (P/N 420 297 433) to ease O-ring past damper body threads with floating piston guide.

NOTICE Failure to install internal floating piston correctly could result in shock damage.

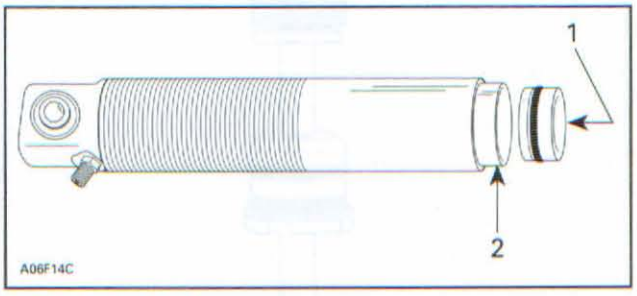

1. *Push (slowly) by hand*
2. *Floating piston guide*

29. Lubricate inside of piston guide with MOLYKOTE G-N (P/N 420 297 433).
30. Install floating piston to the proper depth refer to following the table.
31. On all HPG T/A shocks, the floating piston is installed hollow side up.

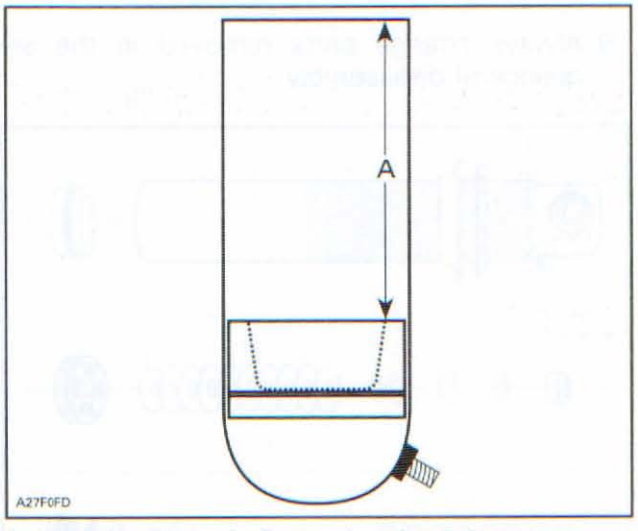

A. Installation distance for floating piston installation

www.midwestmanuals.com

SHOCK P/N	INSTALLATION DISTANCE OF FLOATING PISTON
503 192 024	54.5 mm (2-9/64 in)
503 192 025	
503 191 532	119.5 mm (4-11/16 in)
503 191 791	
503 192 035	
503 192 678	164 mm (6-15/32 in)
505 071 991	167 mm (6-9/16 in)
505 072 232	
503 191 534	171.5 mm (6-3/4 in)
503 192 023	

NOTE: If the floating piston is installed too far into the damper body, light air pressure through valve (with core removed) will move piston outward.

32. Reinstall tire valve core after internal floating piston has been installed at the correct height and before adding oil.

⚠ WARNING

Whenever using compressed air exercise extreme caution, cover damper opening with shop cloth to reduce chance of possible injury.

NOTICE **Moisture laden compressed air will contaminate the gas chamber and rust floating piston.**

33. Fill the shock with SHOCK ABSORBER OIL (P/N 293 600 035) to approximately 10 mm (3/8 in), from the base of seal carrier threads.

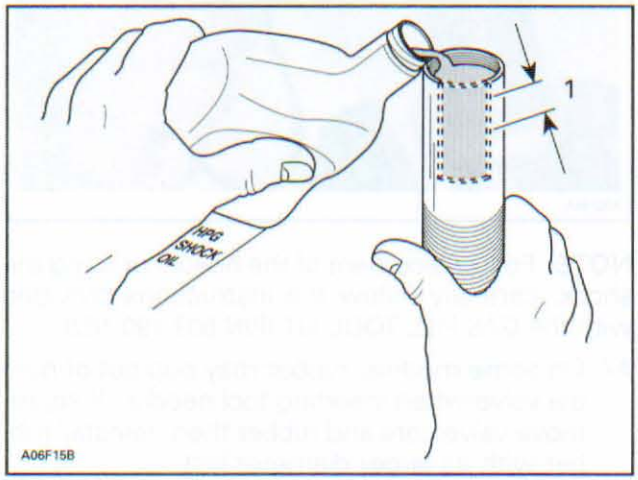

1. Fill to 10 mm (3/8 in)

NOTE: Although we do not measure the exact amount of oil added to the damper, approximately 252 ml (8.52 U.S. oz) will be used.

34. Carefully insert damper rod into the damper body. Lightly oil damper piston seal ring with shock oil to ease installation.

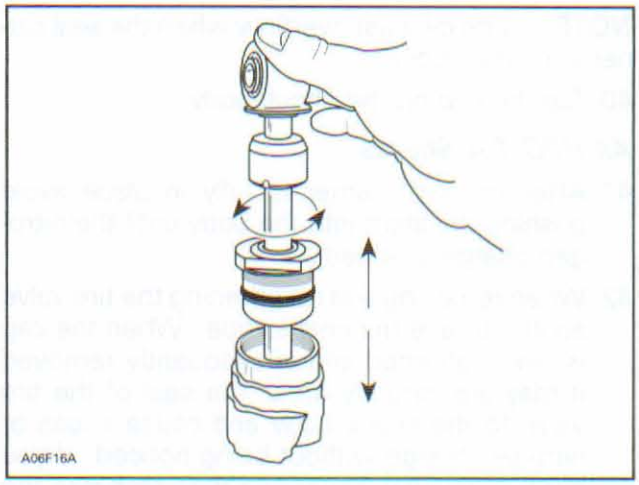

NOTE: Some shock oil will overflow when installing damper. Wrap damper with shop cloth to catch possible overflow oil.

NOTICE **Use care when passing piston into damper body at damper body threads.**

35. Slight oscillation of damper rod may be required to allow piston to enter damper body bore.

36. Slowly push piston into damper body. Slight up and down movement may be required on short stroke to allow all air to pass through piston assembly. The gentle tapping of a small wrench, on the shock eye, may help dislodge air trapped in the submersed piston. Be careful not to drive the shaft any deeper into the oil than is necessary to just cover the shim stack.

NOTE: Fast installation of the damper rod may displace the floating piston from its original position. This must not occur if the damper is expected to perform as designed.

37. With damper rod piston into oil, TOP OFF damper oil volume. Oil level should be to damper body thread base.

Screw Cap Type HPG T/A Shock

38. Seal carrier assembly can now be threaded into damper body. This should be done slowly to allow weapage of oil and to minimize internal floating piston displacement. Torque seal carrier to 65 N•m (48 lbf•ft).

www.midwestmanuals.com

NOTE: Some oil must overflow when installing the cap

Snap Ring Cap Type HPG T/A Shock

39. Seal carrier assembly can now be pushed into damper body to pass snap ring groove. Install snap ring into groove.

NOTE: Some oil must overflow when the seal carrier is pushed down.

40. Tap the cap on the shock body.

All HPG T/A Shocks

41. After the seal carrier is fully in place avoid pushing the shaft into the body until the nitrogen charge is added.
42. When removing and retightening the tire valve acorn nut use minimal torque. When the cap is over tightened and subsequently removed it may prematurely break the seal of the tire valve to the shock body and cause a loss of nitrogen charge without being noticed. If you suspect this has happened then recharge the shock as a precaution. Inspect the tire valve cap before installation to ensure that the internal rubber gasket is in its proper position.
43. Nitrogen (N) can now be added to damper body.

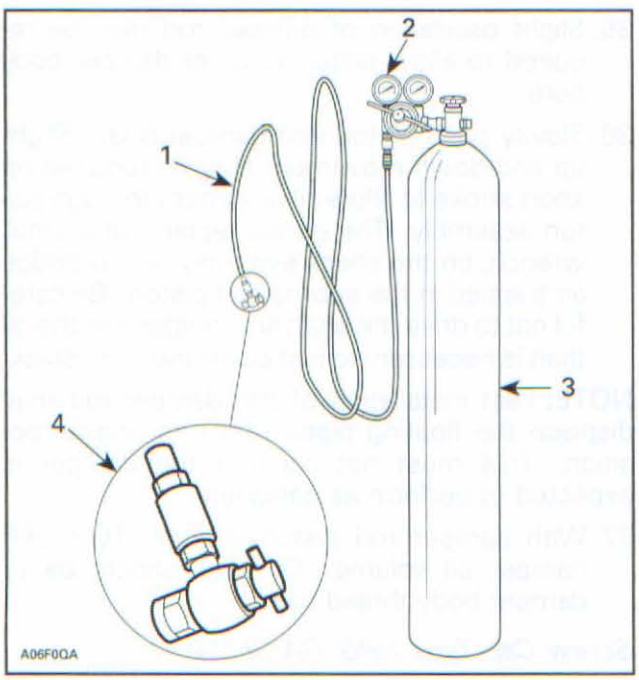

1. *High pressure hose*
2. *Stage regulator, delivery pressure range 2070 kPa (300 PSI)*
3. *High pressure cylinder filled with industrial grade nitrogen*
4. *Valve tip permanently installed*

NOTE: Never substitute another gas for nitrogen. Nitrogen has been selected for its inert qualities and will not contaminate the gas chamber of the shock.

44. Preset your pressure regulator to 2070 kPa (300 PSI) nitrogen (N), this gas pressure will restore the correct pressure for your damper.

NOTICE Do not exceed the recommended pressure values.

⚠ WARNING

Whenever working with high pressure gas, use eye wear protection. Never direct gas pressure toward anybody.

45. Install the GAS FILL TOOL KIT (P/N 503 190 102) on GAS SHOCK VALVE TOOL (TIRE VALVE TYPE) (P/N 529 035 570). Set the regulator pressure on the nitrogen cylinder as per the shock requirement.
46. Mount the shock on vise. Remove screw on top of valve. Place the needle guide of gas refill tool on the shock valve. While depressing the detent pin of the gas refill tool and pushing forward the needle assembly, insert the needle through the rubber core of the pressure valve assembly of the shock.

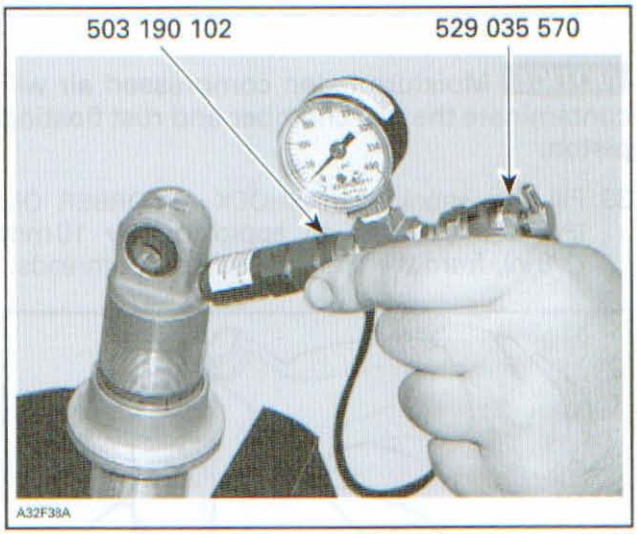

NOTE: For replacement of the needle or filling the shock, carefully follow the instructions provided with the GAS FILL TOOL KIT (P/N 503 190 102).

47. On some models, rubber may pop out of needle valve when inserting tool needle. If so, remove valve core and rubber then, reinstall rubber with its larger diameter last.

www.midwestmanuals.com

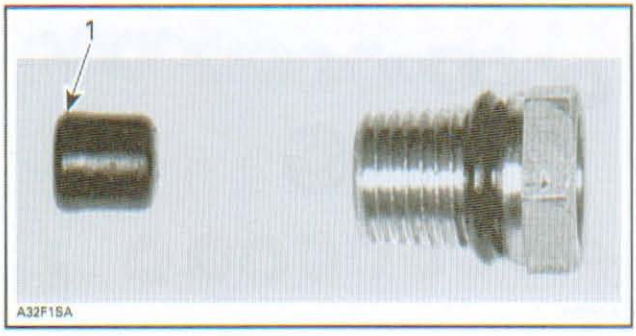

1. Larger diameter

48. Carefully inspect damper for gas or oil leaks. Any leaks must be corrected before continuing. If no leak is detected, install the screw on top of the valve and clean the shock with the PULLEY FLANGE CLEANER (P/N 413 711 809).
49. Damper gas pressure cannot be confirmed by using a pressure gauge. The volume of gas in the shock is very small, and the amount lost during gauge installation will lower the pressure too much and require refilling.
50. After recharging is complete the rebuilt shock should be bench-tested. Stroke the shock to ensure full travel and smooth compression and rebound action. If the shaft moves in or out erratically this could indicate too much air is trapped inside. If the shaft will not move or has partial travel then it may be hydraulically locked. In either event the shock must be rebuilt again. Pay particular attention to the placement of the IFP, quantity of oil and shim stack/piston assembly.

Shock Absorber Rebuilt Procedure (HPG T/A Racing Clicker)

1. Tightly secure the shock base in vise. DO NOT CLAMP ONTO SHOCK BODY.
2. Using a 12 mm wrench, slowly remove air inlet valve, allowing the gas inside the reservoir to escape.
3. Remove top shock cover using a 36 mm wrench.



4. Pull shock rod out of main shock body.
5. Drain oil from the shock body. Dispose of used oil properly.



6. Push down the remote reservoir cover to remove the retaining circlip.

www.midwestmanuals.com

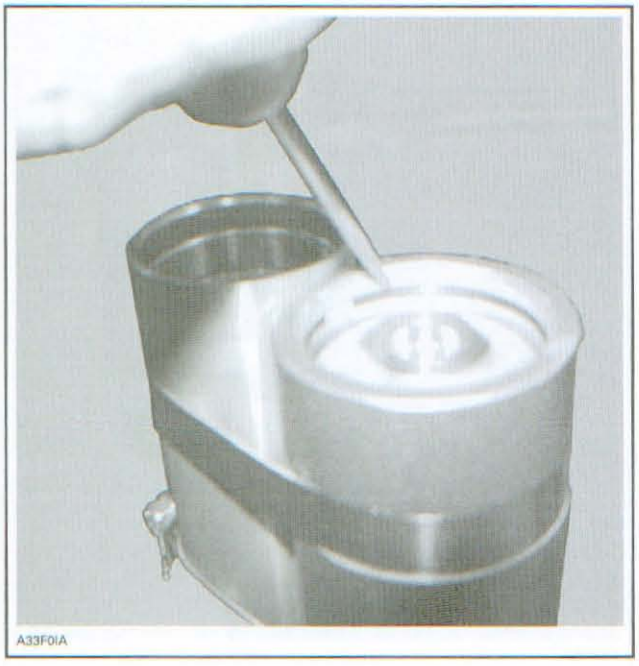
A33F0IA

7. Using the FLOATING PISTON PULLER (P/N 529 035 901), remove the remote reservoir cover then the floating piston inside the remote reservoir.

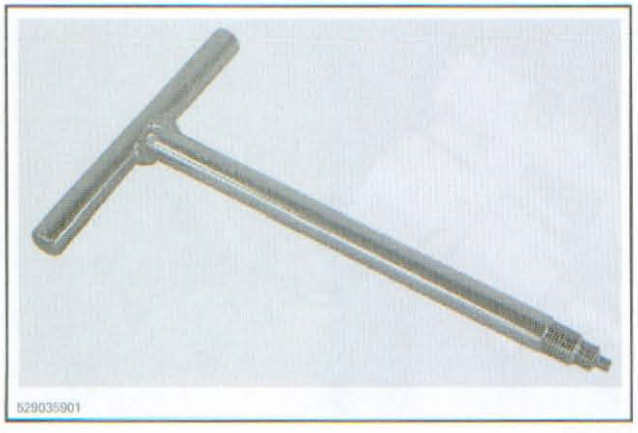
529035901

8. Using a 14 mm wrench, remove the lock nut securing shims, washers and piston to shock rod.
9. Carefully remove and layout shims, washers and piston from shock rod. Play close attention to shims and washers sequence and piston position.

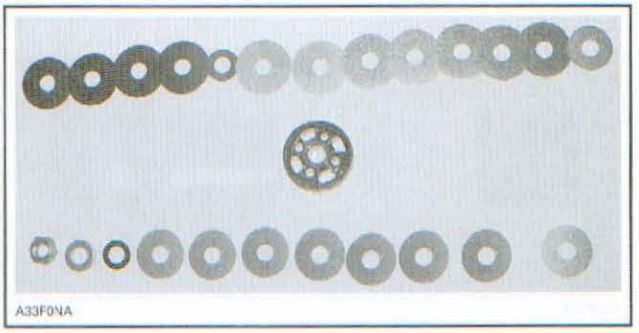
A33F0NA

TYPICAL

10. Clean all shock components using PULLEY FLANGE CLEANER (P/N 413 711 809). DO NOT MIX SHIMS AND WASHERS TOGETHER.
11. Assemble valve shims, washers and piston in proper order and place them back onto shock rod.
12. Torque the shock rod nut at 18 N•m (159 lbf•**in**).

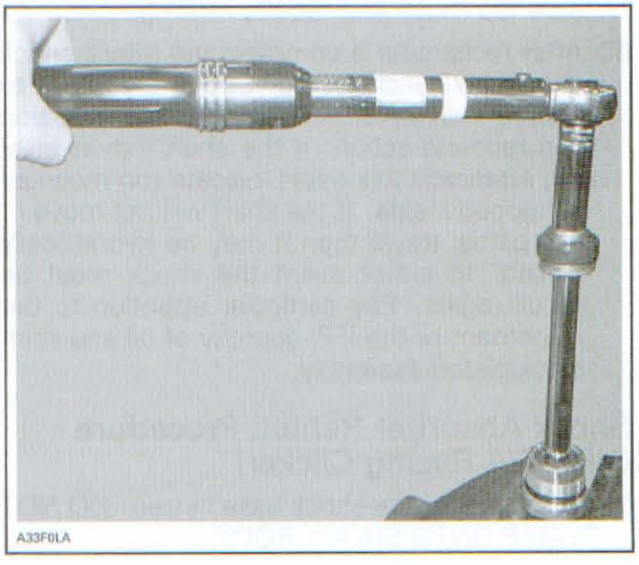
A33F0LA

13. Fill main shock body with shock absorber oil to a level of half full.
14. Fill also remote reservoir with shock absorber oil to within 6.4 mm (1/4 in) from the top.
15. Hold the remote reservoir in a way so the oil level in the shock and the remote reservoir are at the same height.
16. Cup your hand and place it over the remote reservoir. Pump with your hand to circulate oil through the shock and reservoir to remove any trapped air. Low speed adjuster must be open 1 turn minimum.
17. Fill the remote reservoir with shock absorber oil.

www.midwestmanuals.com

18. Lubricate the O-ring on floating piston with shock oil and install it.


A33F0KA

NOTE: The key to good shock performance is to remove all the air from shock body and reservoir.

19. Push the floating piston to the bottom of the remote reservoir. Oil will rise in the main shock body almost to the top.
20. Fill the shock body with SHOCK ABSORBER OIL (P/N 293 600 035) until level with bottom of threads.
21. Lubricate seal around piston and valve stack and gently push into main shock body.
22. Stroke the piston and valve stack slowly to remove any trapped air. Using a small hammer or wrench, gently tap on the rod mounting eyelet to help remove air.
23. Again, push the floating piston to the bottom of the remote reservoir.
24. Pull shock rod as far out as possible and replace the shock cover and torque to 65 N•m (48 lbf•ft) . Oil must spill from the shock body before the seal cover O-ring seals the shock.
25. Lubricate the O-ring on remote reservoir cover with shock oil and install the remote reservoir cover.
26. Push down the cover and install the retaining circlip.
27. Using the FLOATING PISTON PULLER (P/N 529 035 901), pull the cover to seat it against the retaining circlip.

⚠ WARNING

Make sure the cover is firmly seated against the retaining circlip before filling with gas.

28. Install the air inlet valve.
29. Pressurize the shock at 2070 kPa (300 PSI) with nitrogen (N). Use the correct GAS FILL TOOL KIT (P/N 503 190 102).

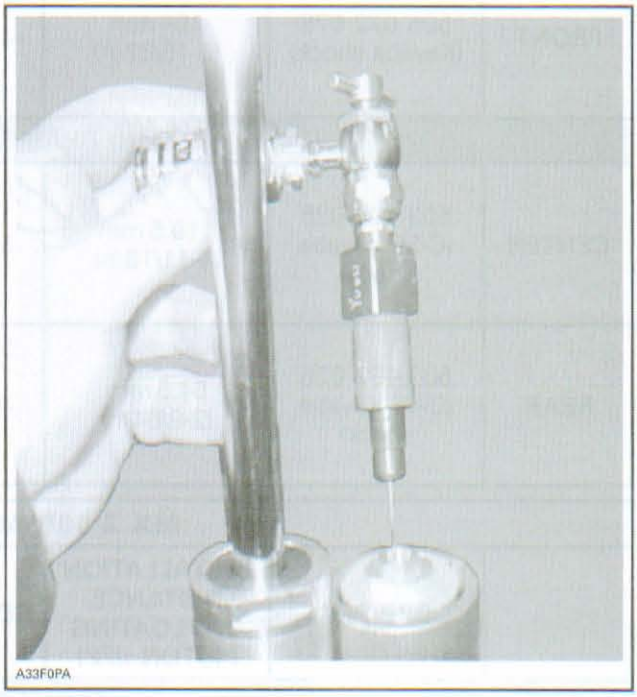
A33F0PA

30. Carefully inspect damper for gas or oil leaks. Any leaks must be corrected before continuing. If no leak is detected, install the safety screw into the air inlet valve and clean the shock with the PULLEY FLANGE CLEANER (P/N 413 711 809).
31. After recharging is complete, the rebuilt shock should be bench-tested. Stroke the shock to ensure full travel, smooth compression and rebound action. If the damper rod moves in or out erratically this could indicate air is trapped inside. If the damper rod will not move or has partial travel then it may be hydraulically locked. In either event the shock must be taken apart.

www.midwestmanuals.com

Shock Absorber Calibration Charts (All HPG T/A)

MX Z RENEGADE X						
	BRP P/N	**INSTALLATION DISTANCE OF FLOATING PISTON (IFP)**	**COMPRESSION**	**REBOUND**	**SLIT**	**PRESSURE**
FRONT SUSPENSION						
FRONT	505 072 678 (Kayaba shock)	164 mm (6-15/32 in)	1 x 30 x .203 1 x 14 x .152 4 x 30 x .152 1 x 28 x .114 1 x 16 x .152	1 x 26 x .203 1 x 15 x .114 2 x 26 x .152 1 x 15 x .254	No slit	2070 kPa (300 PSI)
REAR SUSPENSION						
CENTER	503 192 035 (C-36 Kayaba shock)	119.5 mm (4-11/16 in)	6 x 30 x .203 1 x 17 x .152 5 x 30 x .203 1 x 26 x .114 1 x 22 x .114	1 x 26 x .203 1 x 15 x .114 3 x 26 x .203 1 x 16 x .203	1	2070 kPa (300 PSI)
REAR	503 192 025 (C-46 Kayaba shock)	54.5 mm (2-9/64 in)	5 x 30 x .254 1 x 15 x .152 4 x 30 x .254 1 x 26 x .114 1 x 16 x .152	1 x 26 x .203 1 x 16 x .114 4 x 26 x .254 1 x 16 x .203	1	2070 kPa (300 PSI)

MX Z 50TH/MX Z TNT (CA/US)						
	BRP P/N	**INSTALLATION DISTANCE OF FLOATING PISTON (IFP)**	**COMPRESSION**	**REBOUND**	**SLIT**	**PRESSURE**
FRONT SUSPENSION						
FRONT	505 071 991 (Kayaba shock)	167 mm (6-9/16 in)	1 x 30 x .203 1 x 14 x .152 4 x 30 x .152 1 x 28 x .114 1 x 16 x .152	1 x 26 x .203 1 x 15 x .114 4 x 26 x .152 1 x 16 x .254	1	2070 kPa (300 PSI)
REAR SUSPENSION						
CENTER	503 191 791 (C-36 Kayaba shock)	119.5 mm (4-11/16 in)	2 x 30 x .203 1 x 14 x .152 6 x 30 x .152 1 x 26 x .114 1 x 18 x .114	1 x 26 x .203 1 x 15 x .114 3 x 26 x .254 1 x 16 x .203	1	2070 kPa (300 PSI)
REAR	503 192 023 (C-36 Kayaba shock)	171.5 mm (6-3/4 in)	7 x 30 x .203 1 x 17 x .152 4 x 30 x .203 1 x 26 x .114 1 x 16 x .152	1 x 26 x .203 1 x 16 x .114 4 x 26 x .254 1 x 16 x .203	1	2070 kPa (300 PSI)

www.midwestmanuals.com

MX Z TNT (EUR)/MX Z X						
	BRP P/N	**INSTALLATION DISTANCE OF FLOATING PISTON (IFP)**	**COMPRESSION**	**REBOUND**	**SLIT**	**PRESSURE**
FRONT SUSPENSION						
FRONT	505 072 678 (Kayaba shock)	164 mm (6-15/32 in)	1 x 30 x .203 1 x 14 x .152 4 x 30 x .152 1 x 28 x .114 1 x 16 x .152	1 x 26 x .203 1 x 15 x .114 2 x 26 x .152 1 x 15 x .254	No slit	2070 kPa (300 PSI)
REAR SUSPENSION						
CENTER	503 191 791 (C-36 Kayaba shock)	119.5 mm (4-11/16 in)	2 x 30 x .203 1 x 14 x .152 6 x 30 x .152 1 x 26 x .114 1 x 18 x .114	1 x 26 x .203 1 x 15 x .114 3 x 26 x .254 1 x 16 x .203	1	2070 kPa (300 PSI)
REAR	503 192 024 (C-46 Kayaba shock)	54.5 mm (2-9/64 in)	3 x 30 x .203 1 x 30 x .152 1 x 15 x .152 2 x 30 x .203 1 x 30 x .152 1 x 26 x .114 1 x 16 x .152	1 x 26 x .203 1 x 16 x .114 5 x 26 x .254 1 x 16 x .203	1	2070 kPa (300 PSI)

SUMMIT 50TH/SUMMIT X						
	BRP P/N	**INSTALLATION DISTANCE OF FLOATING PISTON (IFP)**	**COMPRESSION**	**REBOUND**	**SLIT**	**PRESSURE**
FRONT SUSPENSION						
FRONT	505 072 232 (Kayaba shock)	167 mm (6-9/16 in)	1 x 30 x .152 1 x 14 x .152 6 x 30 x .152 1 x 16 x .152	1 x 26 x .203 1 x 15 x .114 4 x 26 x .152 1 x 16 x .203	1	2070 kPa (300 PSI)
REAR SUSPENSION						
CENTER	503 191 532 (C-36 Kayaba shock)	119.5 mm (4-11/16 in)	1 x 30 x .203 1 x 14 x .152 5 x 30 x .203 1 x 28 x .114 1 x 24 x .114	1 x 26 x .254 1 x 15 x .114 4 x 26 x .254 1 x 16 x .203	1	2070 kPa (300 PSI)
REAR	503 191 534 (C-36 Kayaba shock)	171.5 mm (6-3/4 in)	1 x 30 x .203 1 x 14 x .152 4 x 30 x .203 1 x 28 x .114 1 x 18 x .114	5 x 26 x .203 1 x 16 x .203	1	2070 kPa (300 PSI)

www.midwestmanuals.com

SUMMIT HILLCLIMB						
	BRP P/N	INSTALLATION DISTANCE OF FLOATING PISTON (IFP)	COMPRESSION	REBOUND	SLIT	PRESSURE
FRONT SUSPENSION						
FRONT	505 072 678 (Kayaba shock)	164 mm (6-15/32 in)	1 x 30 x .203 1 x 14 x .152 4 x 30 x .152 1 x 28 x .114 1 x 16 x .152	1 x 26 x .203 1 x 15 x .114 2 x 26 x .152 1 x 15 x .254	No slit	2070 kPa (300 PSI)
REAR SUSPENSION						
CENTER	503 191 532 (C-36 Kayaba shock)	119.5 mm (4-11/16 in)	1 x 30 x .203 1 x 14 x .152 5 x 30 x .203 1 x 28 x .114 1 x 24 x .114	1 x 26 x .254 1 x 15 x .114 4 x 26 x .254 1 x 16 x .203	1	2070 kPa (300 PSI)
REAR	503 192 069 (C-36 Kayaba shock)	54.5 mm (2-9/64 in)	3 x 30 x .203 1 x 15 x .152 3 x 30 x .203 1 x 28 x 114 1 x 26 x .114 1 x 16 x .114	2 x 26 x .254 1 x 16 x .114 2 x 26 x .254 1 x 17 x .114	1	2070 kPa (300 PSI)

Rear Shock Absorber Installation

Installation is reverse of removal procedure. Pay attention to the following.

To ease shock installation, secure upper side of shock first.

GSX, GTX and MX Z

If the shock absorber has a remote reservoir, make sure to install the shock so that reservoir is facing down.

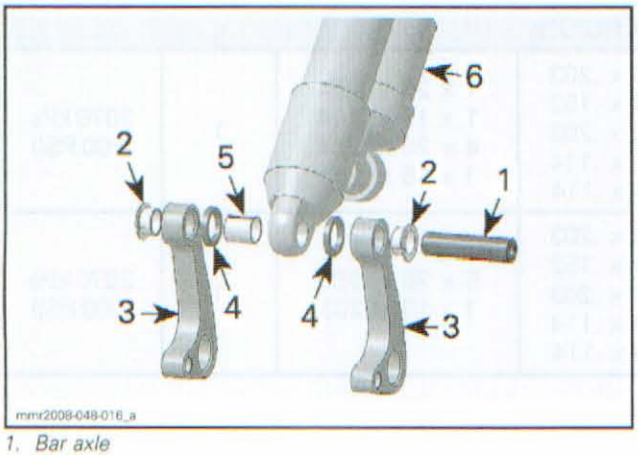

1. *Bar axle*
2. *Bushings*
3. *Rocker arms*
4. *Plastic spacers*
5. *Inner sleeve*
6. *Reservoir position*

Center Shock Absorber Installation

Installation is reverse of removal procedure. Pay attention to the following details.

GSX (Sport), GTX (Sport), MX Z (Trail) and SUMMIT (Everest 600 (CA/US))

1. Position the cam downwards.

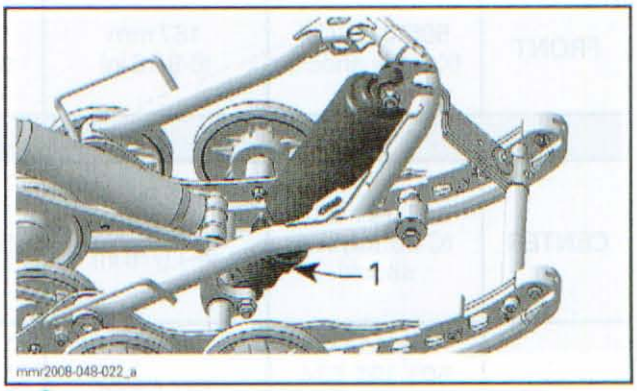

1. *Cam*

All Other Models

1. Position the adjustment ring or the cam upwards and the valve towards the tunnel.

www.midwestmanuals.com

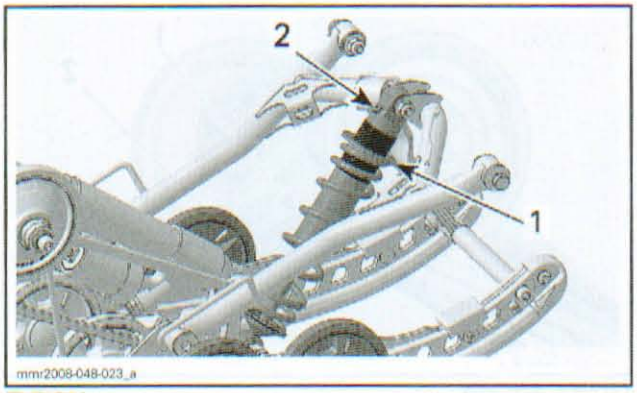

TYPICAL
1. *Adjustment ring*
2. *Valve*

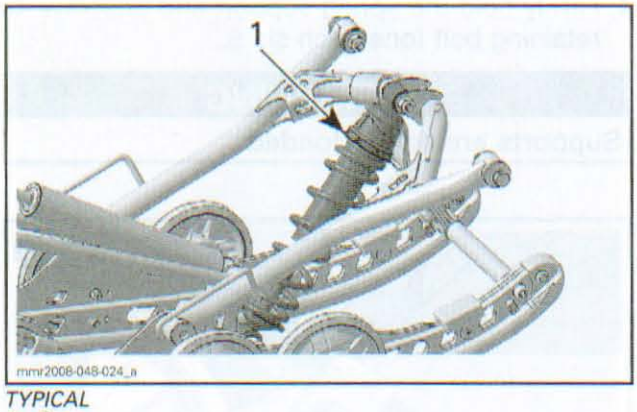

TYPICAL
1. *Cam*

All SUMMIT

1. Using **NEW** socket screws, install shock shaft to runners.
2. Position washers in proper position.



BOTTOM OF SHOCK ABSORBER
1. *Washers location*

REAR SPRINGS

Rear Spring Removal

GSX, GTX and MX Z

1. Lift rear of vehicle and support it off the ground.
2. Decrease springs preload by turning cams accordingly.

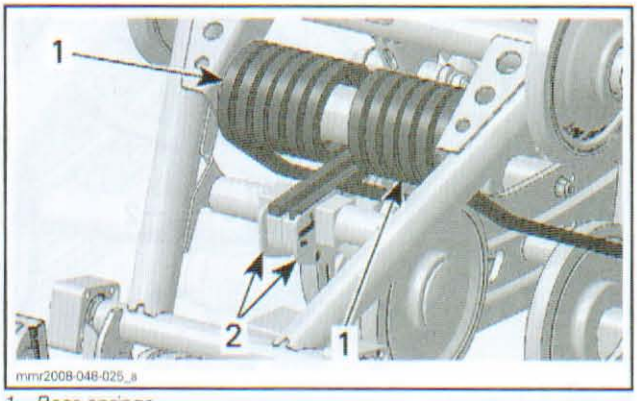

1. *Rear springs*
2. *Cams*

3. Remove idler wheels to have access to spring support screws.

IDLER WHEELS	
GSX AND MX Z (EXCEPT RENEGADE AND RENEGADE X)	External and internal idler wheels
GTX AND MX Z (RENEGADE AND RENEGADE X)	Internal idler wheels

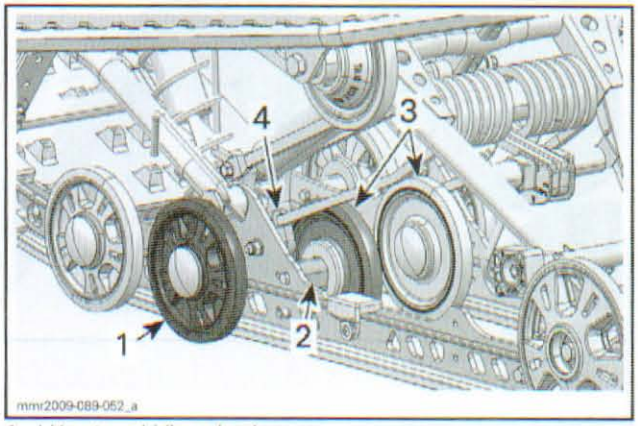

1. *LH external idler wheel*
2. *Idler wheel support*
3. *Internal idler wheels*
4. *LH spring support*

4. Hold the spring supports firmly and remove spring support nuts.

www.midwestmanuals.com

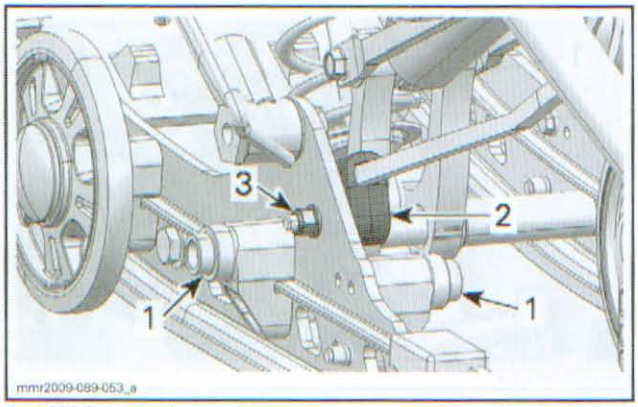

mmr2009-089-053_a

1. LH idler wheel supports
2. Spring support
3. Spring support nut

5. Move spring supports with spring ends over the idler wheel supports and let them sits on the track.

NOTE: If the springs are still loaded, completely loosen track tension in order to make room to unload springs.

6. Remove spring axle screws (one each side).

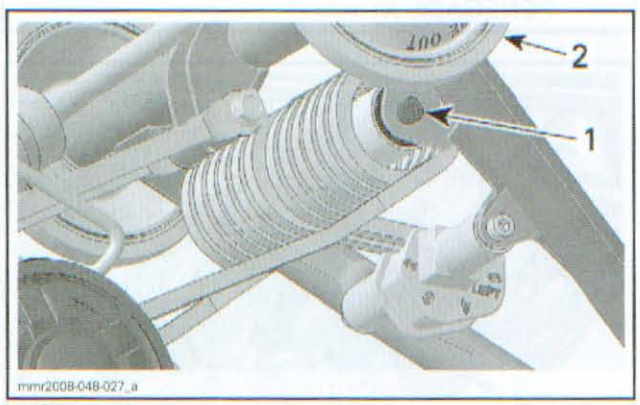

mmr2008-048-027_a

1. Spring axle screw
2. Upper idler wheel

7. Remove springs and spring axle.

SUMMIT

1. Lift rear of vehicle and support it off the ground.
2. Completely loosen track tension by unscrewing both adjustment screws.
3. Decrease springs preload by turning cams accordingly.

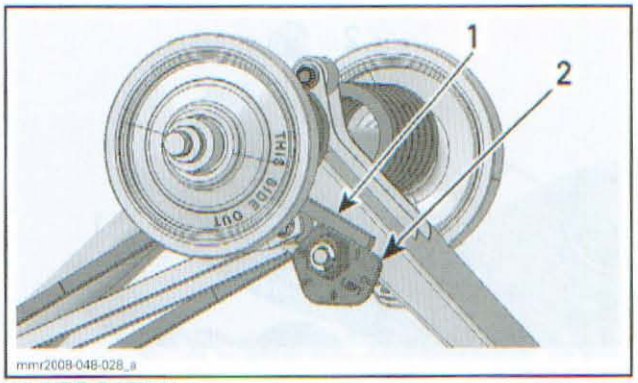

mmr2008-048-028_a

LH SIDE SHOWN
1. Rear spring
2. Cam

4. Firmly hold the spring support and unscrew its retaining bolt (one each side).

⚠ WARNING

Supports are spring loaded.

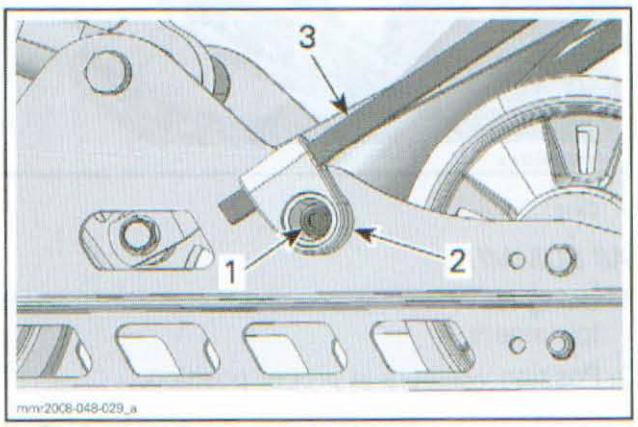

mmr2008-048-029_a

1. Spring support bolt
2. Spring support
3. Spring

5. Remove screws and washers from rear arm top axle.
6. Loosen set screw from locking rings.
7. Remove locking rings.
8. Remove upper idler wheels.
9. Remove springs.

www.midwestmanuals.com

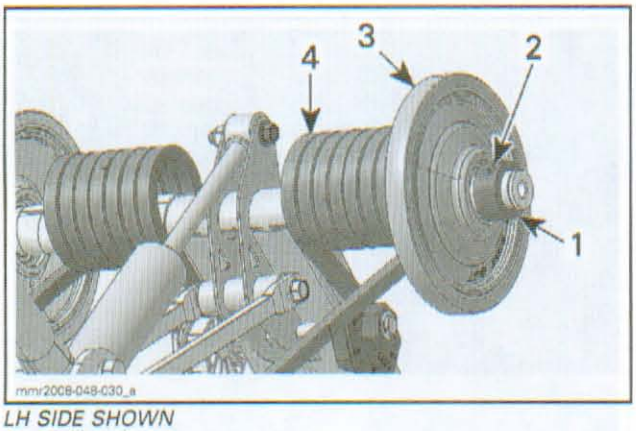

LH SIDE SHOWN
1. *Locking ring*
2. *Set screw*
3. *Upper idler wheel*
4. *Rear spring*

Rear Spring Installation

Installation is reverse of removal procedure. Pay attention to the following.

1. Respect THIS SIDE OUT inscription on top idler wheels.
2. Make sure that spring end is in cam adjuster.

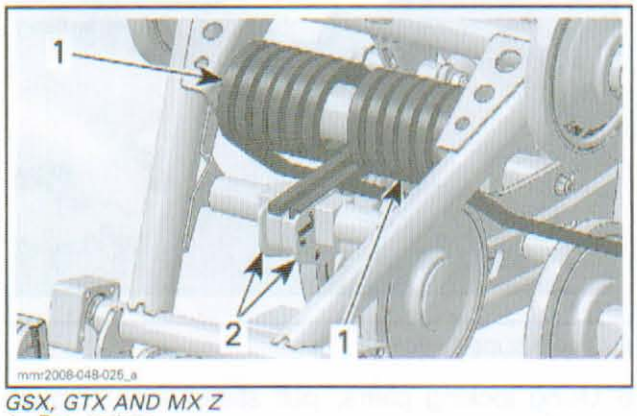

GSX, GTX AND MX Z
1. *Rear springs*
2. *Cams*

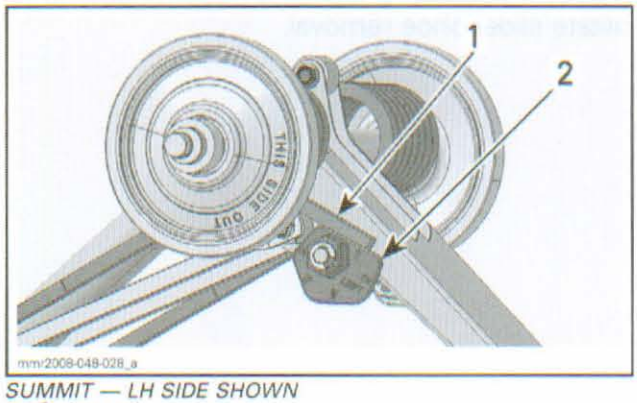

SUMMIT — LH SIDE SHOWN
1. *Spring end*
2. *Cam*

3. Install spring supports upwards.

GTX Series and MX Z (Renegade and Renegade X)

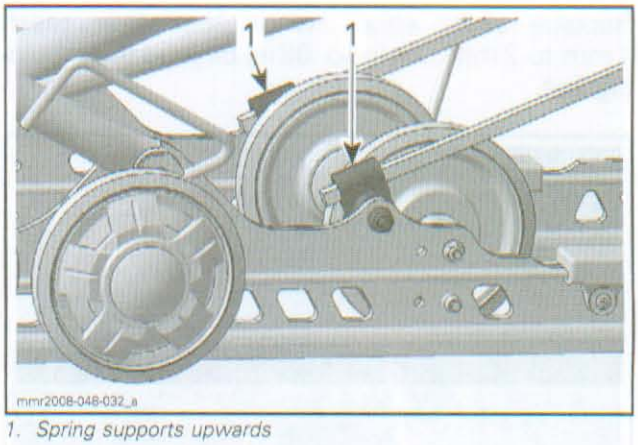

1. *Spring supports upwards*

GSX Series and All MX Z except Renegade and Renegade X

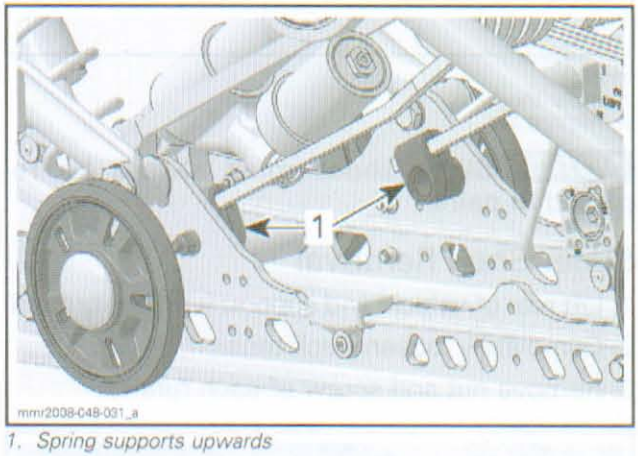

1. *Spring supports upwards*

SUMMIT

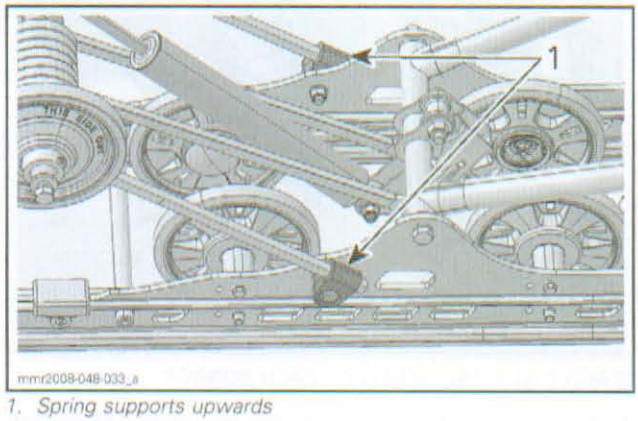

1. *Spring supports upwards*

www.midwestmanuals.com

SLIDER SHOES

Slider Shoe Inspection

Replace slider shoes when the wear reach 1 mm to 2 mm (.04 in to .08 in) beyond the moulding line.

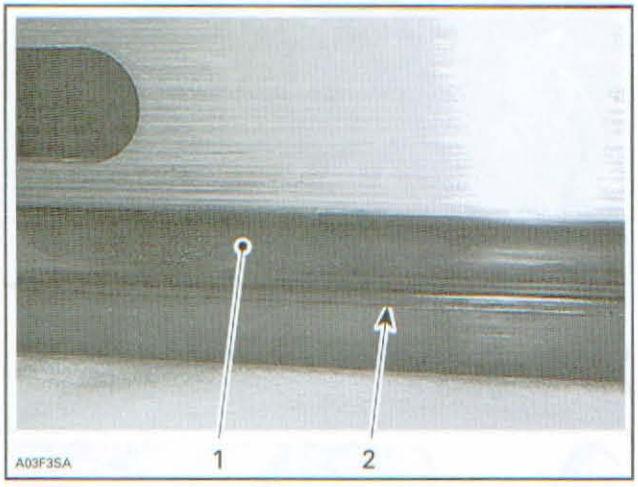

TYPICAL
1. *Slider shoe*
2. *Molding line*

NOTICE Slider shoes must always be replaced in pairs.

Slider Shoe Removal

1. Lift rear of vehicle and support it off the ground.
2. Completely loosen track tension.
3. Remove nut and screw of each runner.

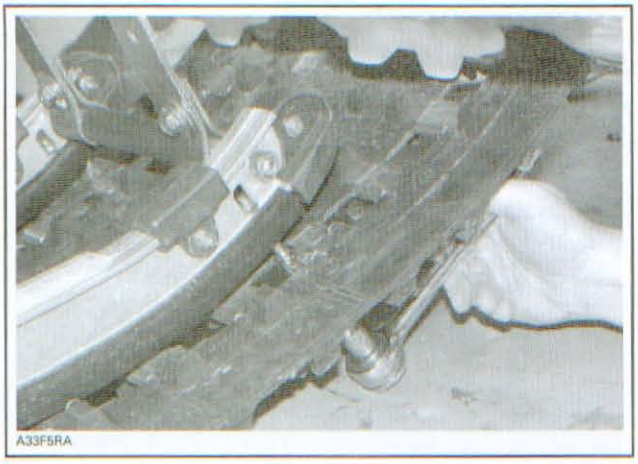

REMOVE NUT AND SCREW OF EACH RUNNER

4. At the rear of vehicle, align a track window with slider shoe.

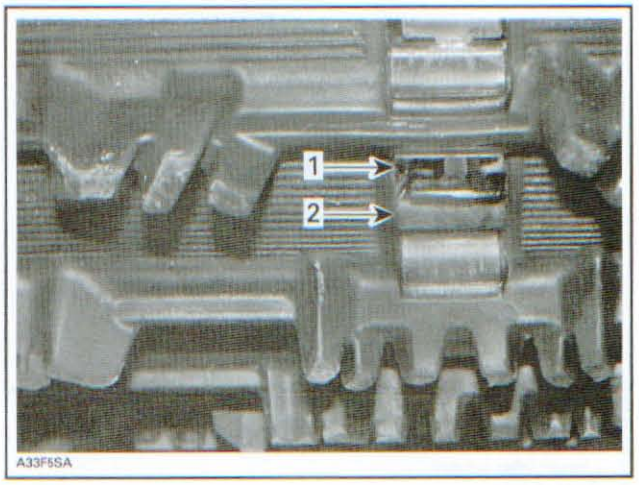

TYPICAL
1. *Track window*
2. *Slider shoe*

5. Using a pry bar or a screwdriver, push slider shoe rearward until it comes in contact with track.

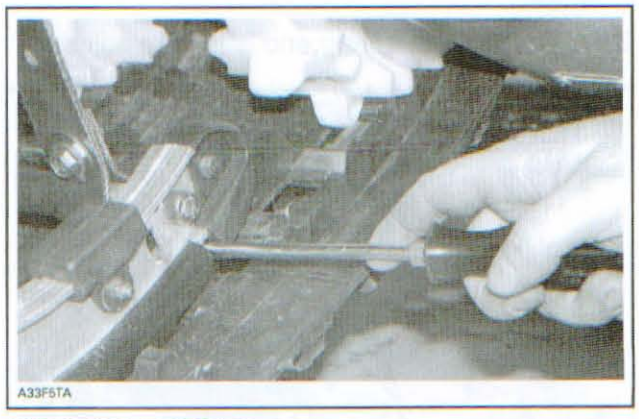

PUSH ON SLIDER SHOE

6. Using locking pliers, pull slider shoe through track window to remove.

NOTE: If necessary, lubricate track window to facilitate slider shoe removal.

www.midwestmanuals.com

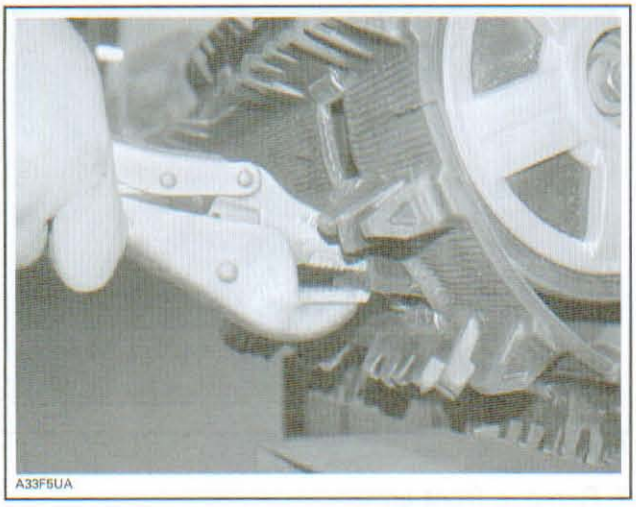

PULL ON SLIDER SHOE TO REMOVE

Slider Shoe Installation

Installation is reverse of removal procedure. Pay attention to the following detail.

Make sure to insert slider shoe end with hole first.

FRONT ARM

Front Arm Removal

GSX, GTX and MX Z

1. Remove *SUSPENSION ASSEMBLY*, see procedure in this section.
2. Unfasten stopper strap.

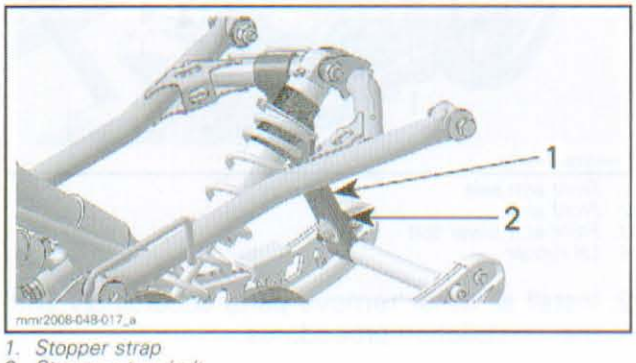

1. *Stopper strap*
2. *Stopper strap bolt*

3. Remove upper bolt securing the front shock absorber.

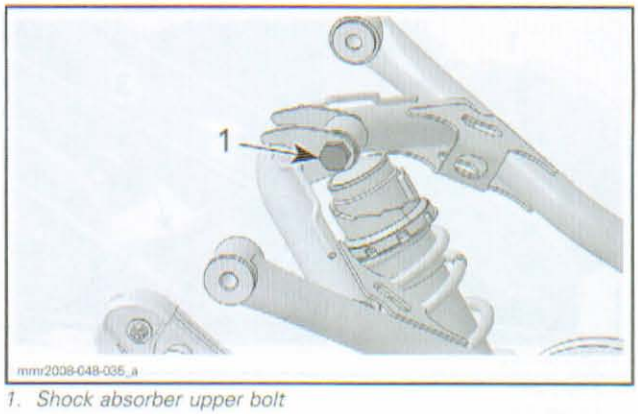

1. *Shock absorber upper bolt*

4. Unscrew bolts securing the bottom ends of front arm.

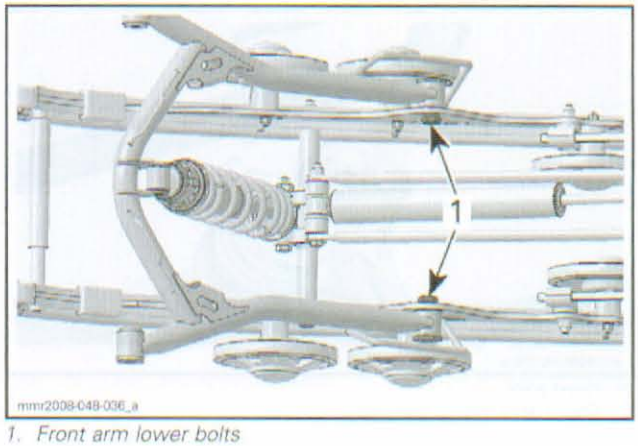

1. *Front arm lower bolts*

SUMMIT

1. Remove *SUSPENSION ASSEMBLY*, see procedure in this section.
2. Remove bolt securing rocker to front arm.

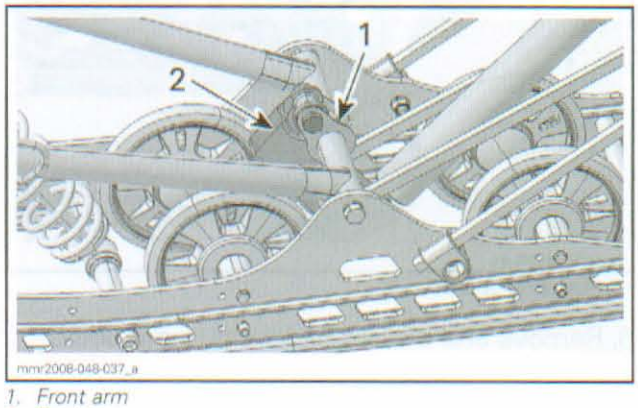

1. *Front arm*
2. *Rocker*

3. Unscrew and remove the front arm lower bolts and washers.

www.midwestmanuals.com

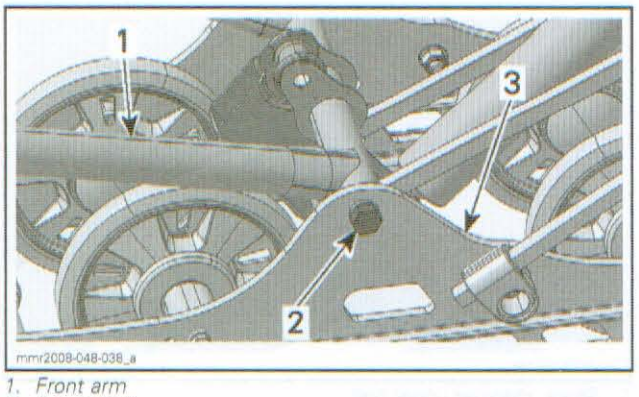

1. *Front arm*
2. *Lower bolt*
3. *LH runner*

4. Remove the shock absorber upper bolt.

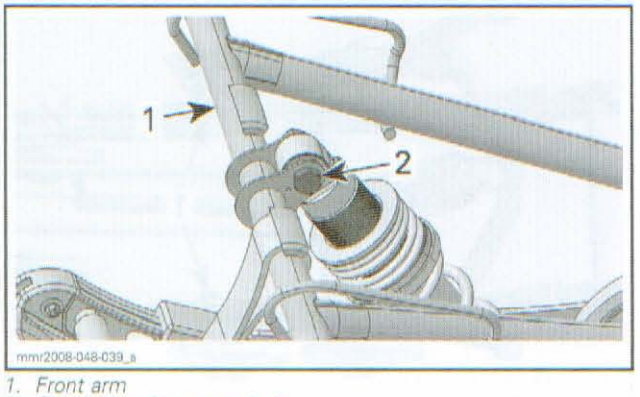

1. *Front arm*
2. *Shock absorber upper bolt*

5. Unfasten stopper strap.

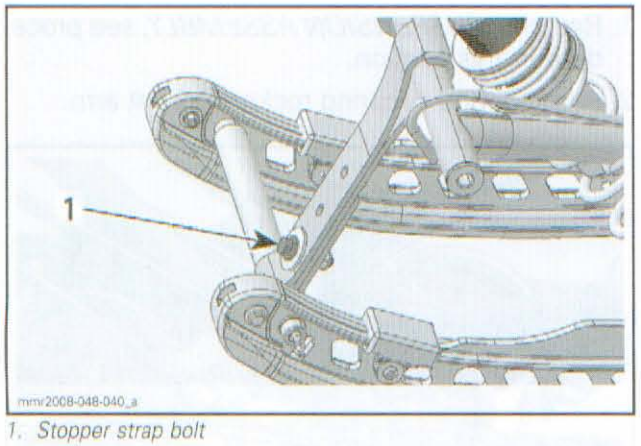

1. *Stopper strap bolt*

6. Remove and discard front arm upper bolts.

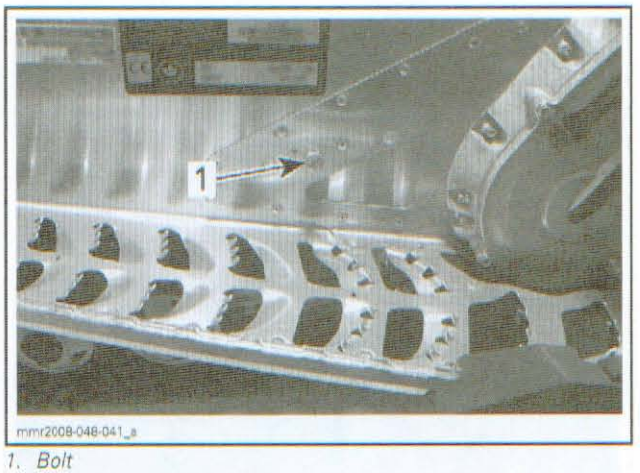

1. *Bolt*

7. Remove front arm.

Front Arm Installation

Installation is reverse of removal procedure. Pay attention to the following details.

GSX, GTX and MX Z

1. Install the lower bolts and tighten axles to 125 N•m (92 lbf•ft).

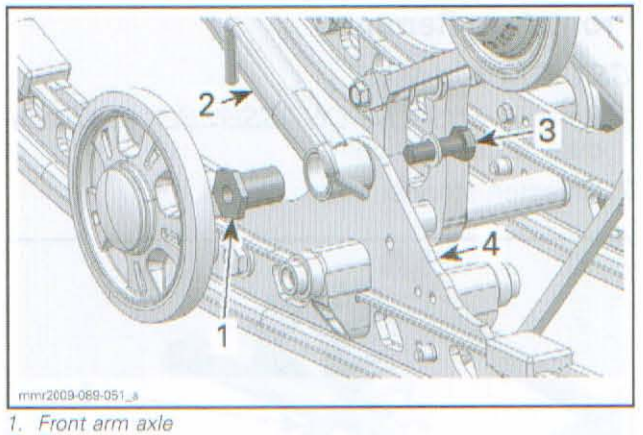

1. *Front arm axle*
2. *Front arm*
3. *Front arm lower bolt*
4. *LH runner*

2. Install all other remove parts accordingly with their installation procedures.

SUMMIT

1. Install **NEW** front arm lower bolts.
2. Torque them to 62 N•m (46 lbf•ft).

www.midwestmanuals.com

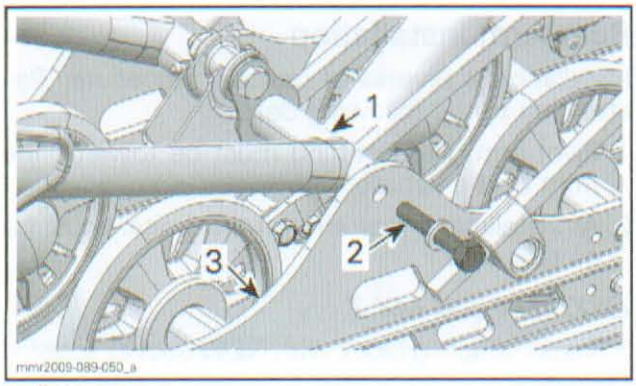

1. *Front arm*
2. *Front arm lower bolt (LH side)*
3. *Runner*

3. Install all other remove parts accordingly with their installation procedures.

REAR ARM

Rear Arm Removal

GSX, GTX and MX Z

1. Lift rear of vehicle and support it off the ground.
2. Completely loosen track tension.
3. Remove socket screws securing rear arm to frame.

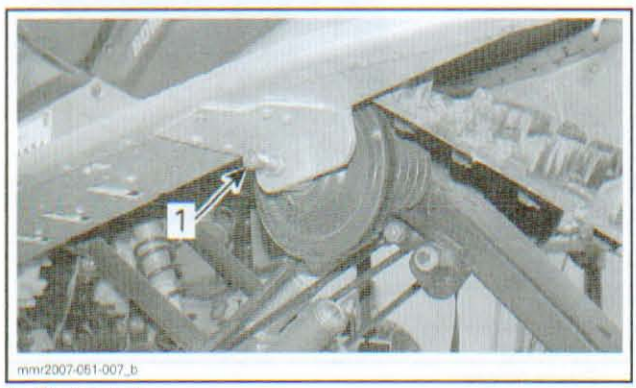

1. *Socket bolt*

4. Remove rear shock absorber upper bolt.

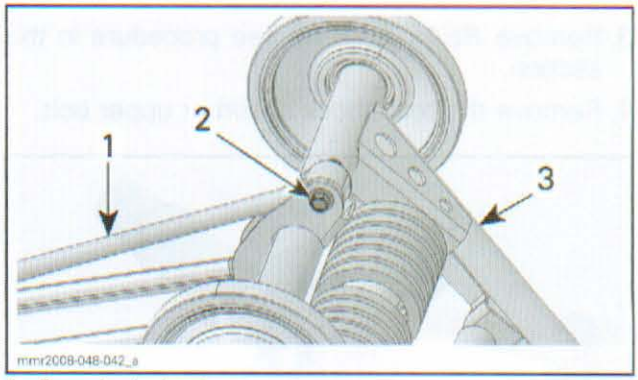

1. *Rear shock absorber*
2. *Shock absorber bolt*
3. *Rear arm*

5. Remove bolt securing throttle rods to rear arm.

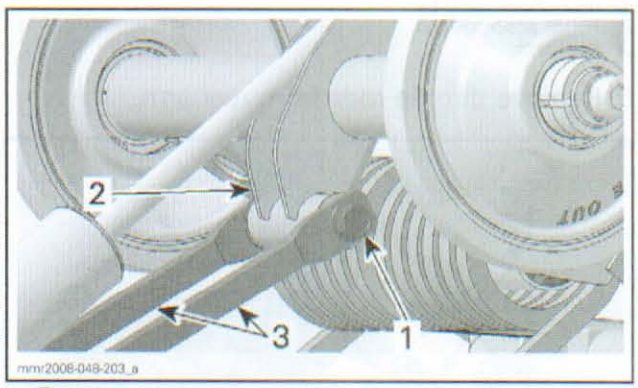

1. *Throttle rod bolt*
2. *Rear arm*
3. *Throttle rods*

6. Remove *REAR SPRING*, see procedure in this section.
7. Remove and discard coupling block screws securing rear arm to pivot arm.

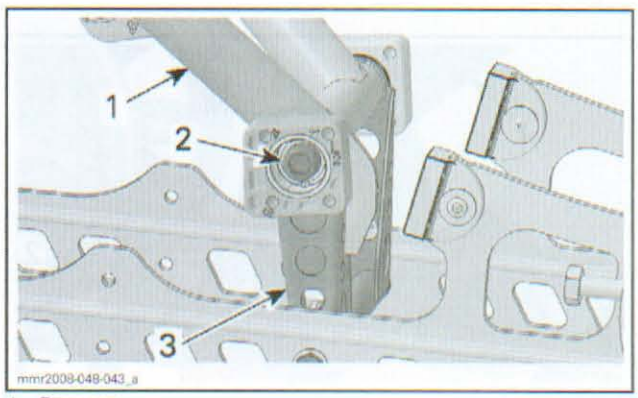

1. *Rear arm*
2. *LH coupling block bolt*
3. *Pivot arm*

8. Remove rear arm.

SUMMIT

1. Lift rear of vehicle and support it off the ground.
2. Completely loosen track tension.

www.midwestmanuals.com

3. Remove *REAR SPRING*, see procedure in this section.
4. Remove the rear shock absorber upper bolt.

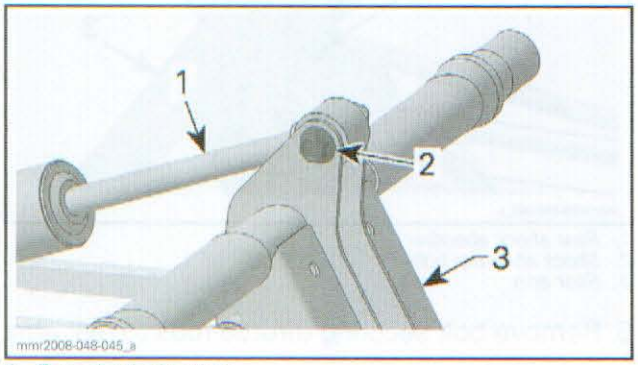

1. *Rear shock absorber*
2. *Shock absorber bolt*
3. *Rear arm*

5. Remove throttle rods from rear arm.

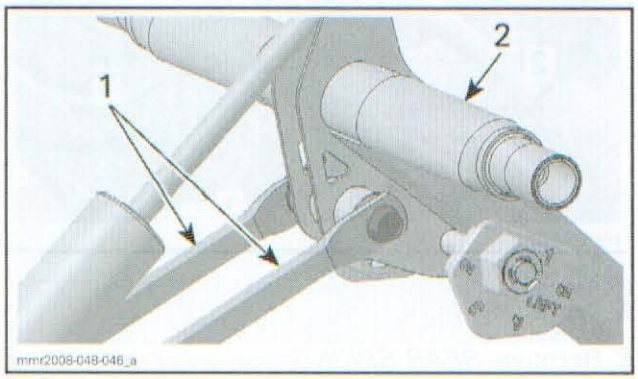

1. *Throttle rods*
2. *Rear arm*

6. Remove bolts and washers holding rear arm to pivot arm.

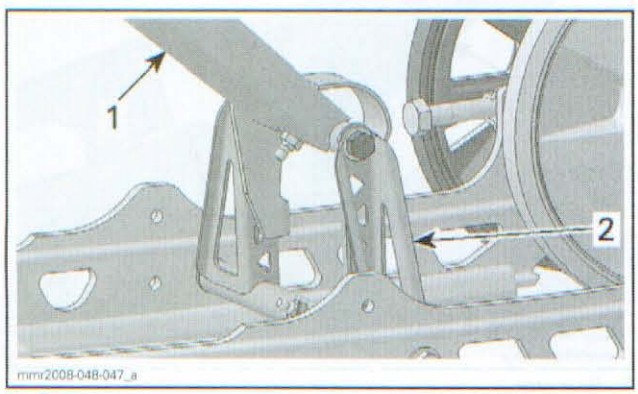

1. *Rear arm*
2. *Pivot arm*

Rear Arm Installation

Installation is reverse of removal procedure. Pay attention to the following details.

1. Pivot arm grease fitting must be towards the front of the vehicle.
2. At installation, rear arm stroke limiter must be on rear side.

GSX, GTX and MX Z

3. Install coupling block with **NEW** socket screws.

All Models

4. Install **NEW** rear arm bolts and tighten them.

REAR ARM BOLTS TIGHTENING	
GSX, GTX and MX Z	85 N•m (63 lbf•ft)
SUMMIT	48 N•m (35 lbf•ft)

Rear Arm Lubrication

Lubricate pivot arm and rear arm at grease fittings using SUSPENSION SYNTHETIC GREASE (P/N 293 550 033).

GSX Series and MX Z (50th, TNT, X)

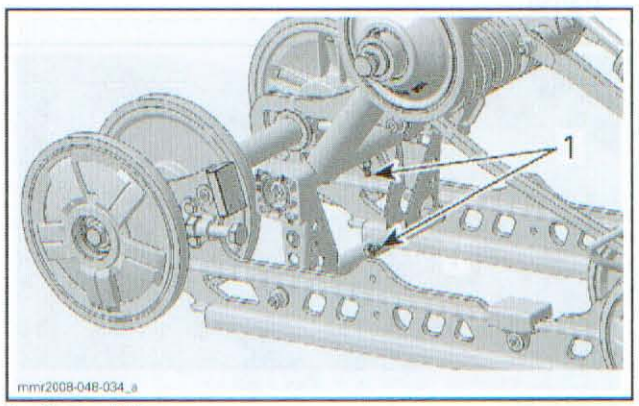

1. *Grease fittings*

GTX Series and MX Z (Adrenaline, Renegade, Renegade X, Trail)

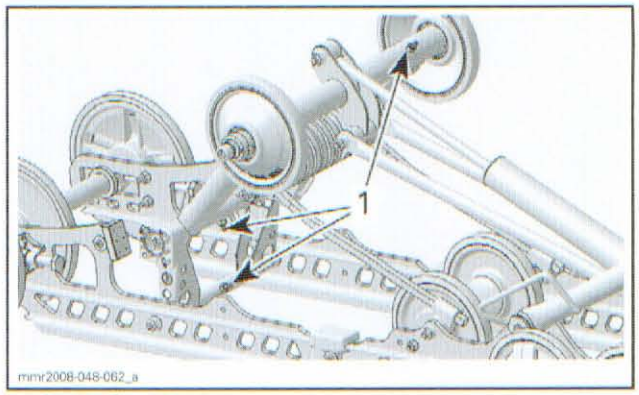

1. *Grease fittings*

www.midwestmanuals.com

SUMMIT

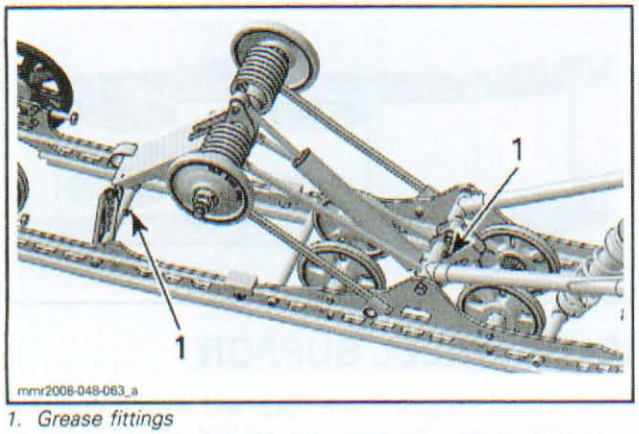

1. Grease fittings

PIVOT ARM

Pivot Arm Removal

GSX, GTX and MX Z

1. Lift rear of vehicle and support it off the ground.
2. Completely loosen track tension.
3. Remove and discard coupling block screws securing rear arm to pivot arm.

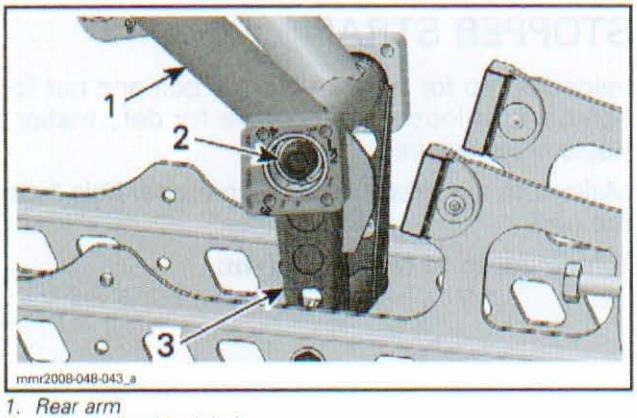

1. Rear arm
2. LH coupling block bolt
3. Pivot arm

4. Remove bolts and washers holding pivot arm to runners.

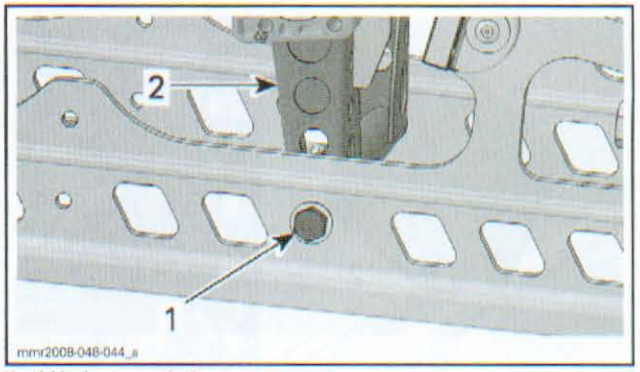

1. LH pivot arm bolt
2. Pivot arm

5. Separate pivot arm from rear arm.

Pivot Arm Installation

The installation is the reverse of the removal procedure.

COUPLING BLOCKS

GSX, GTX and MX Z

1. Both coupling blocks are identified "R" or "L" (right or left) and have position number (from 1 to 4). At installation make sure to install proper block on proper side with the same adjustment position on both sides.

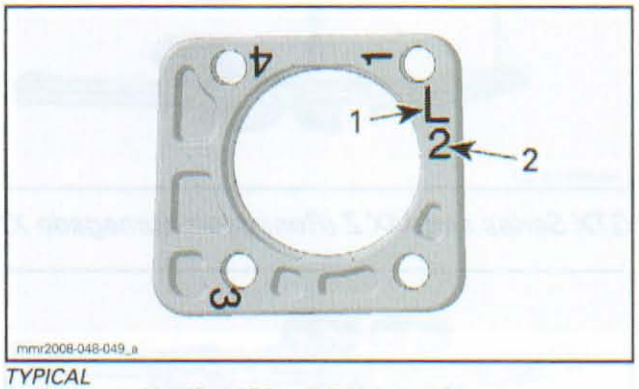

TYPICAL
1. Blocks are identified "R" or "L" (right or left)
2. Blocks position number (from 1 to 4)

MODELS	BLOCK POSITION
All models	2

2. Insert the dowel pin located on pivot arm with the hole at the back of coupling block.

www.midwestmanuals.com

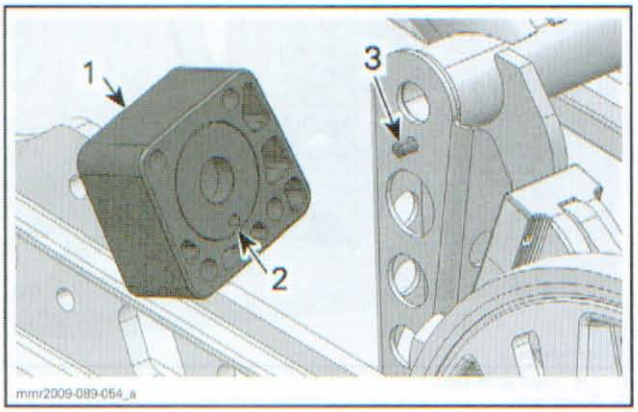

1. *Coupling block*
2. *Hole at the back of coupling block*
3. *Dowel pin on pivot arm*

3. Install **NEW** coupling block screws.

IDLER WHEELS

Refer to illustration for idler wheels position at installation.

GSX Series and MX Z (50th, Adrenaline, Trail, TNT, X)

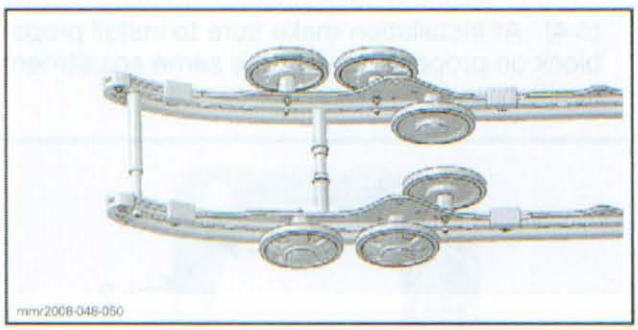

GTX Series and MX Z (Renegade, Renegade X)

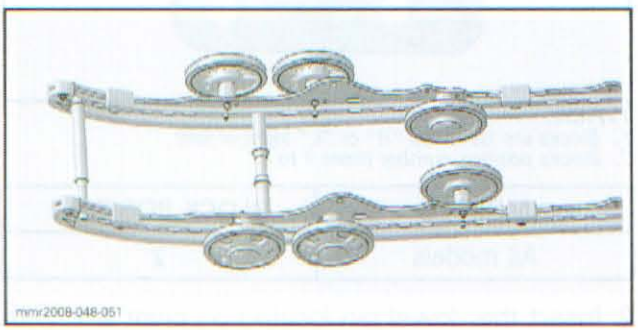

SUMMIT Series

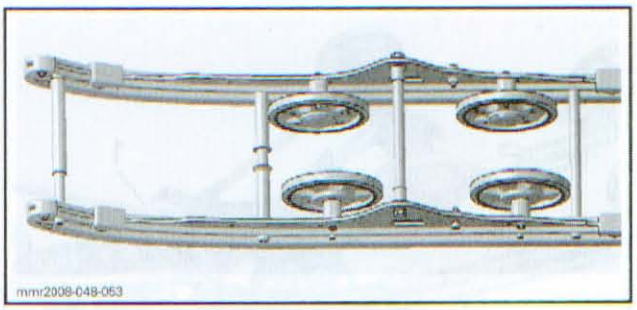

IDLER WHEEL SUPPORT

Idler wheel supports are retained with a bolt and a HUCK rivet. To remove HUCK rivet, refer to *FRAME* for proper procedure.

Replace the HUCK rivets by the following fasteners.

NEW FASTENERS	
Hexagonal flanged bolt M6 x 25	(P/N 207 662 544)
Hexagonal flanged elastic stop nut M6	(P/N 233 261 414)

STOPPER STRAP

Inspect strap for wear or cracks, bolt and nut for tightness. If loose, inspect hole for deformation. Replace as required.

Make sure it is attached through proper hole from the end.

Torque nut to 11 N•m (97 lbf•**in**).

www.midwestmanuals.com

GSX, GTX and MX Z

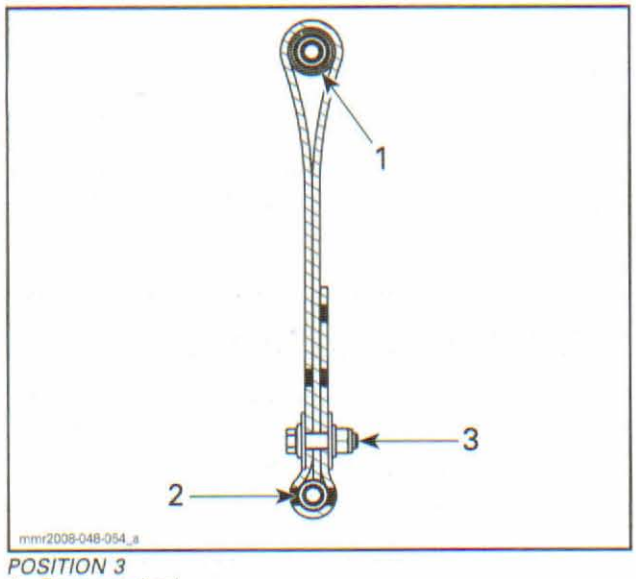

POSITION 3
1. *Front arm (top)*
2. *Front axle*
3. *Towards the rear of vehicle*

SUMMIT

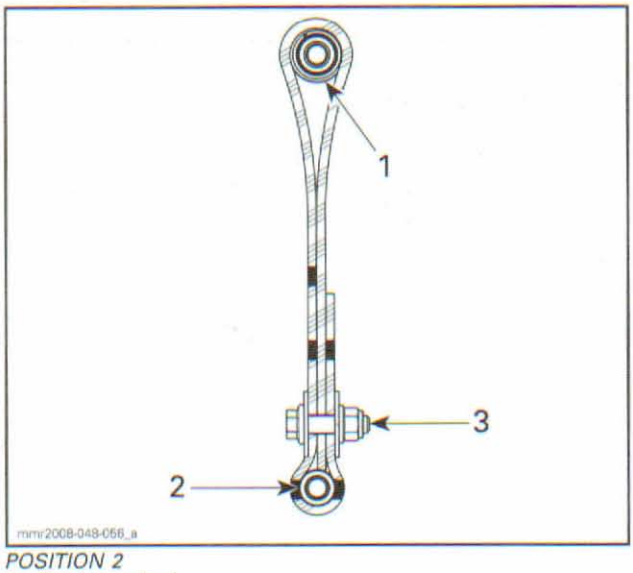

POSITION 2
1. *Front arm (top)*
2. *Front axle*
3. *Towards the rear of vehicle*

www.midwestmanuals.com

www.midwestmanuals.com

STEERING SYSTEM

SERVICE TOOLS

Description	Part Number	Page
HEATED GRIP INSTALLER	529 035 897	556

SERVICE TOOLS – OTHER SUPPLIER

Description	Part Number	Page
MULTILOCK-TERMINAL HOUSING EXTRACTION TOOL AMP	755430-2	555

SERVICE PRODUCTS

Description	Part Number	Page
THERMO LUBE SYNTHETIC GREASE	219 700 417	560

www.midwestmanuals.com

SKIS

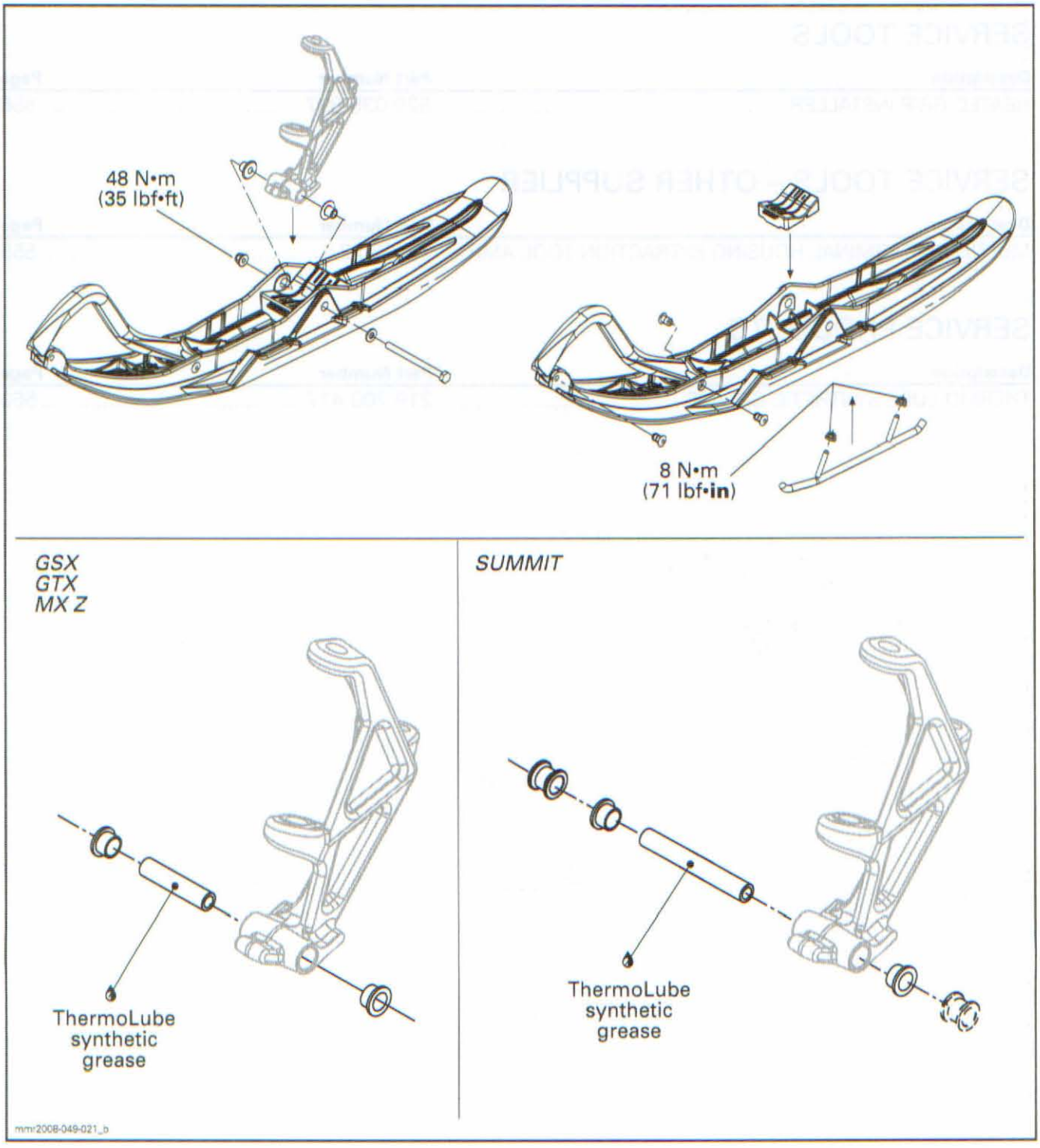

www.midwestmanuals.com

STEERING COLUMN AND TIE-RODS

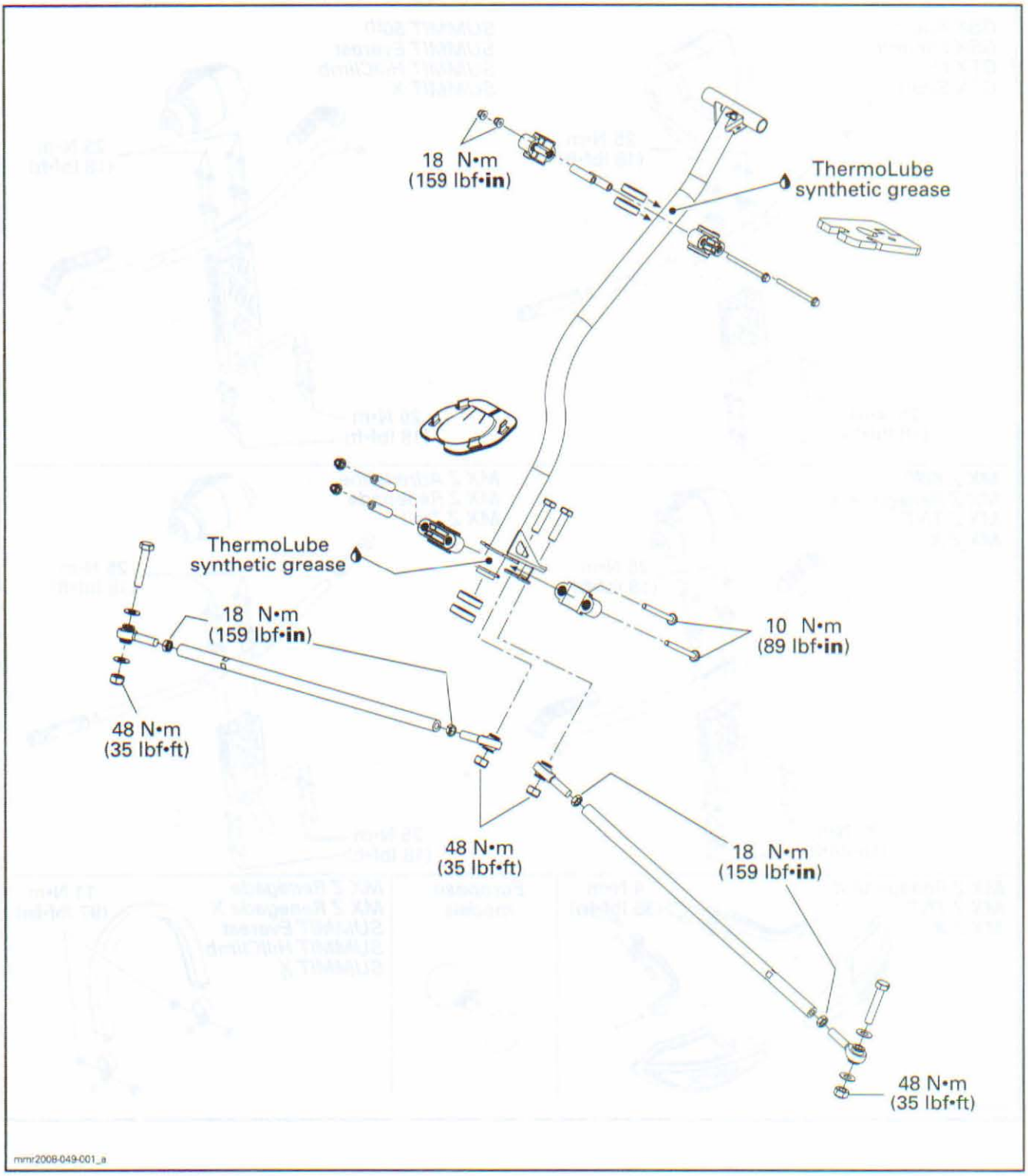

www.midwestmanuals.com

HANDLEBAR

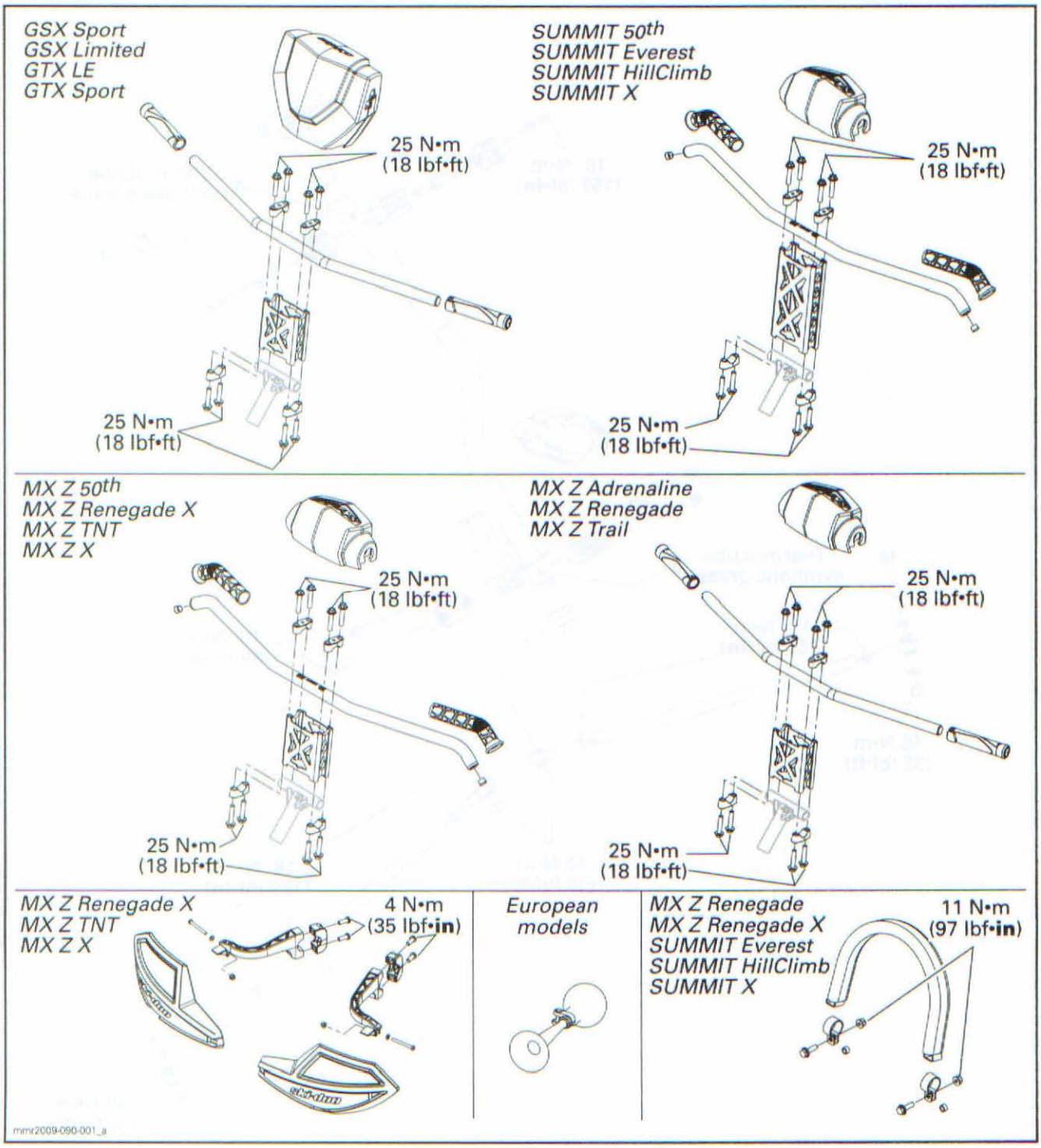

www.midwestmanuals.com

GENERAL

When removing or replacing a part of steering system (except handle grips and handlebar), perform the steering alignment, refer to *STEERING ALIGNMENT* in this section.

During assembly/installation, use the torque values and service products as in the exploded views.

Clean threads before applying a threadlocker. Refer to *SELF-LOCKING FASTENERS* and *LOCTITE APPLICATION* at the beginning of this manual for complete procedure.

⚠ WARNING

Torque wrench tightening specifications must be strictly adhered to.
Locking devices (e.g.: locking tabs, elastic stop nuts, cotter pins, etc.) must be replaced with a new ones.

Hoses or cables removed or disconnected must be installed and routed at the same place.

NOTICE **Locking ties removed during a procedure must be replaced and installed at the same location.**

ADJUSTMENT

STEERING ALIGNMENT

Ski alignment is performed by adjusting length of left and right tie-rods. To do this, use the following procedure:

1. Leave the vehicle on the ground on its own weight.
2. Attach ski handles together with a bungee cord.

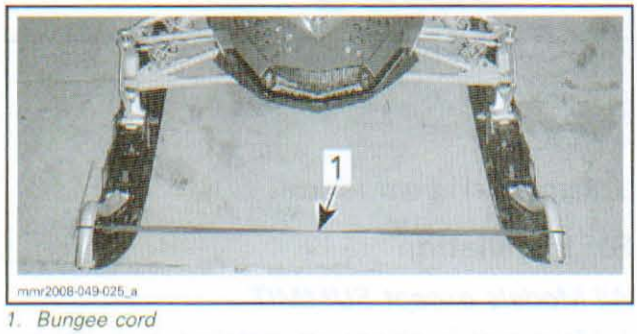

1. Bungee cord

3. Position handlebar so that it is straight ahead position by measuring from the extremities of the grips to the rear most edge of the tunnel, as shown.

NOTE: The reference point must be the same to each side.

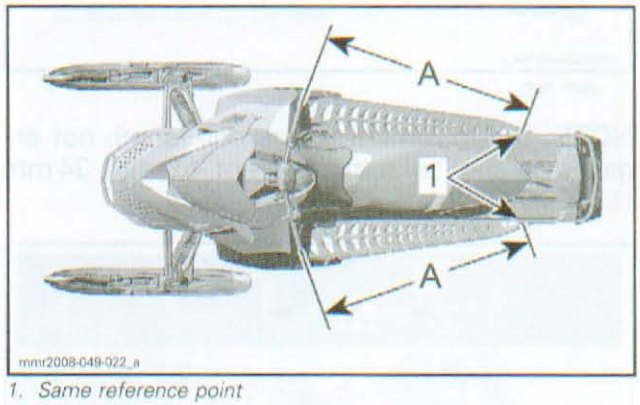

1. Same reference point
A. Equal distance on each side

4. Verify if skis are in straight-ahead position by placing a straight edge against adjusted track and measuring distance between front and rear ski recesses and straight edge.
5. When skis are in straight ahead position, adjust the toe-out.
6. Measure the distance between front and rear ski recesses.
7. Use the following illustration and this equation to determine the perfect steering adjustment.

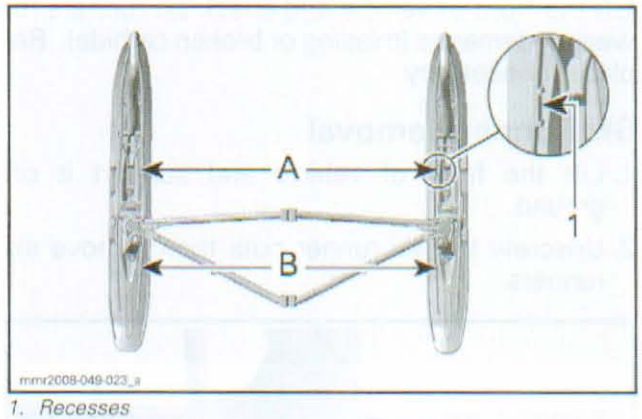

1. Recesses
A – B = 5 MM (.197 IN)

STEERING ALIGNMENT	
Toe-out	5 mm (.197 in)

8. If adjustment is needed, loosen tie-rod jam nuts then turn tie-rods to change their length.
9. Tighten jam nuts and torque them to 18 N•m (159 lbf•**in**).

www.midwestmanuals.com

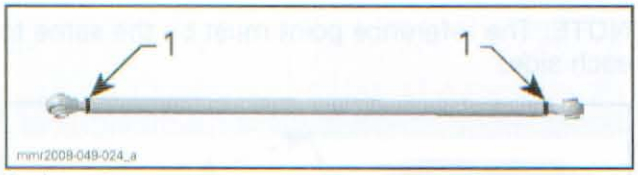

1. Jam nut

NOTE: The maximum tie-rod end length not engaged in the tie rod must not exceed 34 mm (1.339 in).

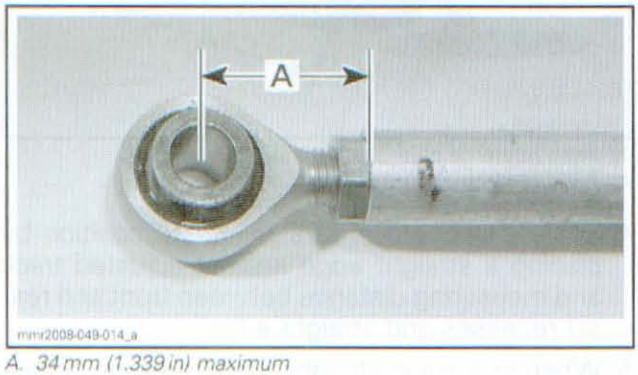

A. 34 mm (1.339 in) maximum

PROCEDURES

SKI RUNNER

Ski Runner Inspection

Lift the front of vehicle and check ski runners for wear or damages (missing or broken carbide). Replace if necessary.

Ski Runner Removal

1. Lift the front of vehicle and support it off ground.
2. Unscrew the ski runner nuts then remove ski runners.

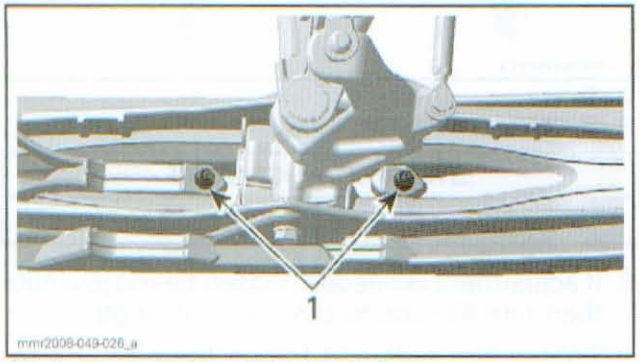

SKI PILOT 5.7 OR 6.9 (LEFT SIDE) SHOWN
1. Ski runner nuts

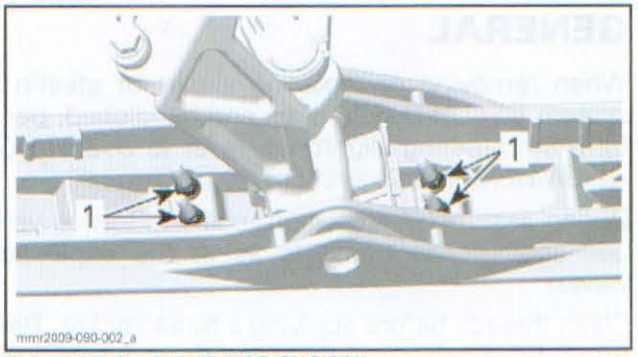

SKI PILOT SL (RIGHT SIDE SHOWN)
1. Ski runner nuts

Ski Runner Installation

The installation is the reverse of the removal procedure. Pay attention to the following.

Torque ski runner nuts to 8 N•m (71 lbf•**in**).

SKI

Ski Inspection

Inspect ski for excessive wear or other damage. Replace if necessary.

Ski Removal

1. Lift front of vehicle and support it off ground.
2. Unscrew nut then pull ski bolt out.

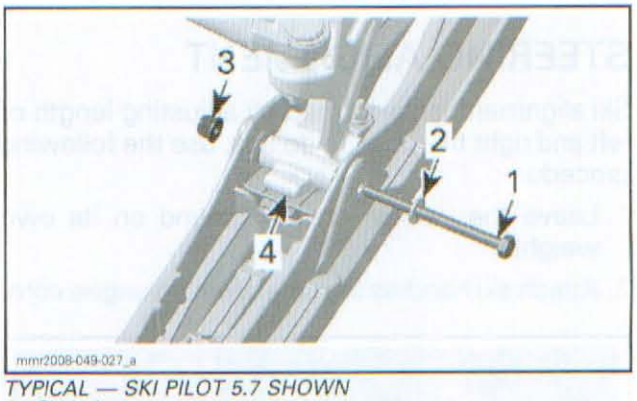

TYPICAL — SKI PILOT 5.7 SHOWN
1. Ski bolt
2. Washer
3. Nut
4. Ski leg

3. Remove ski from vehicle.

Ski Installation

All Models except SUMMIT

1. Make sure bushings are installed in ski holes.
2. Install the ski stopper. Position indicator in front and make sure the bump in the ski is in the groove of the ski stopper.

www.midwestmanuals.com

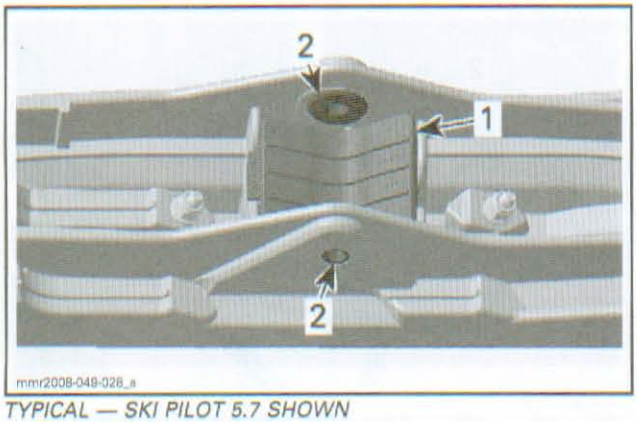

TYPICAL — SKI PILOT 5.7 SHOWN
1. *Ski stopper*
2. *Bushings*

3. Install ski bolt and torque it to 48 N•m (35 lbf•ft).

SUMMIT

1. Make sure bushings are installed in ski holes.
2. Install the ski stopper. Position indicator in front and make sure the bump in the ski is in the groove of the ski stopper.

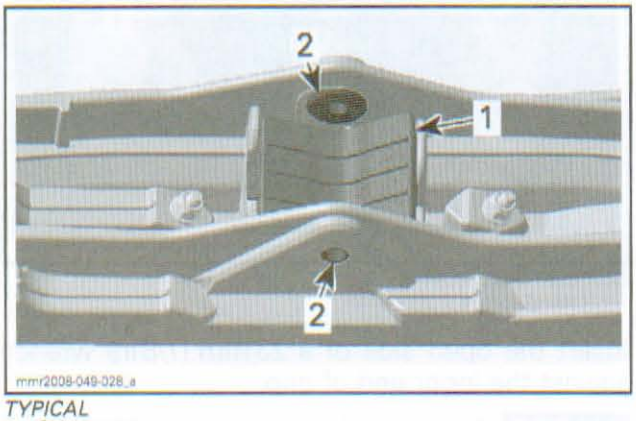

TYPICAL
1. *Ski stopper*
2. *Bushings*

3. Determine the desired ski stance (2 positions).
4. Install the spacer inside for the narrower stance and outside for the wider stance.

⚠ WARNING

Proceed to the same setting for both skis.

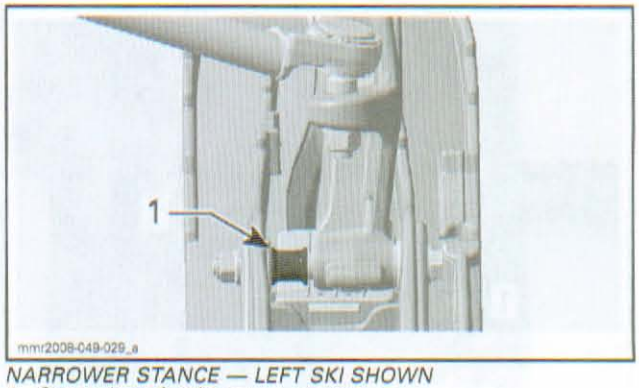

NARROWER STANCE — LEFT SKI SHOWN
1. *Spacer here for the narrower stance*



WIDER STANCE — LEFT SKI SHOWN
1. *Spacer here for the wider stance*

5. Install ski bolt and torque it to 48 N•m (35 lbf•ft).

SKI HANDLE

Ski Handle Removal

1. Remove ski from vehicle.
2. Using a 9 mm (3/8 in) drill bit, remove ski handle rivets. Only drill the head of rivet. Do not try to drill all the way through the rivet. Angle the drill bit to reduce the chance of spinning the rivet in the ski.
3. Remove handle from ski.
4. Place handle in hot water for 10 minutes then using a punch, drive the inner part of rivet out of handle.

Ski Handle Installation

1. To install rivets, use a C-clamp and a short 10 mm socket.
2. Place a rivet in position and insert it into ski and ski handle. Repeat the procedure for the other side.

www.midwestmanuals.com

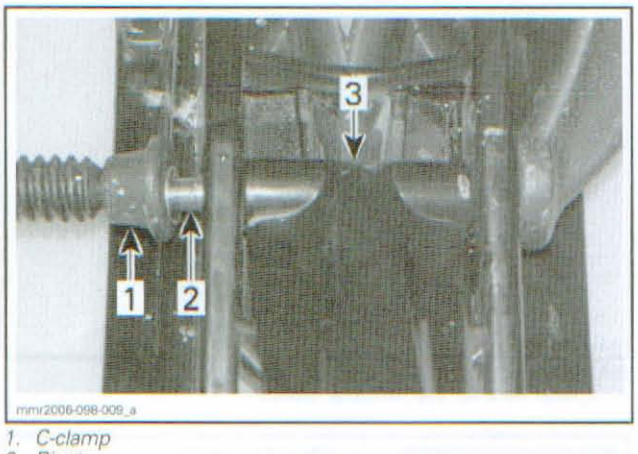

1. C-clamp
2. Rivet
3. Handle

3. When both rivets are installed, use the short 10 mm socket to push rivet heads against ski.

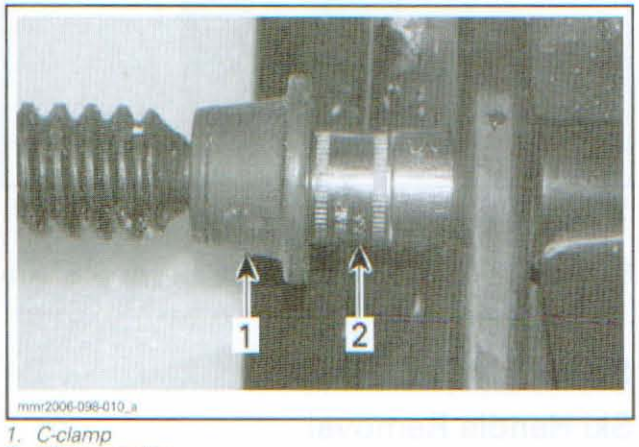

1. C-clamp
2. 10 mm socket

SKI LEG

To replace a ski leg, refer to *FRONT SUSPENSION* section.

HANDLEBAR GRIP

Two handlebar grip types are available, with or without integrated elements.

NOTE: To verify or replace heating elements, refer to *LIGHTS, GAUGE AND ACCESSORIES* section.

Handlebar Grip Removal (Integrated Heating Element)

NOTICE Removing grip from handlebar might damage the heating element. Do not remove needlessly.

Throttle Side

Loosen engine stop switch and throttle lever.

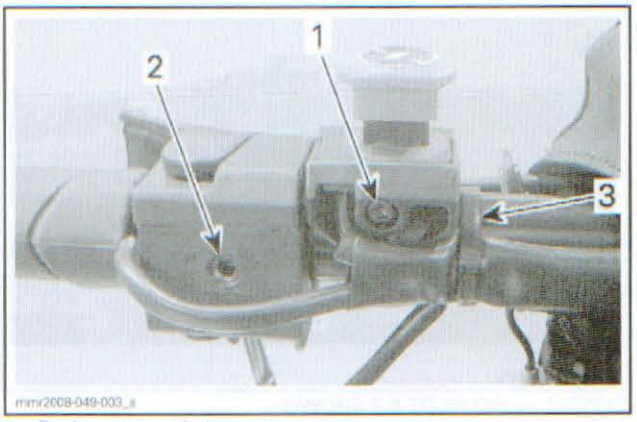

1. Engine stop switch screw
2. Throttle lever screw
3. Cut this locking tie

Move them towards the steering column.

Remove the steering cover.

Unplug the heating element connector.



GSX LIMITED SHOWN
1. Heating element connector

Insert the open side of a 23 mm (7/8 in) wrench against the inner end of grip.

NOTICE **Pay attention not to damage wires with the wrench.**

Using a plastic hammer, tap on the side of the wrench end to make the grip slide out.

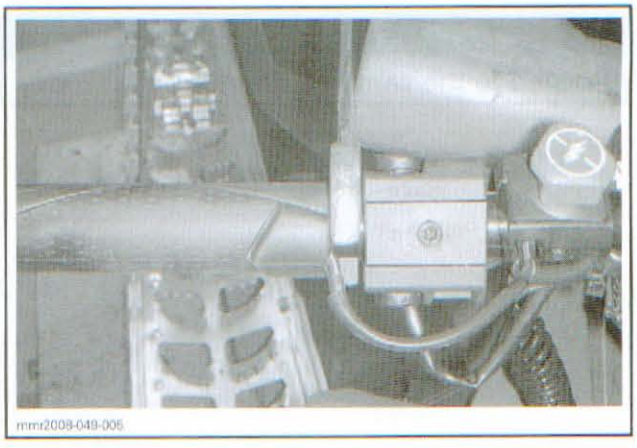

www.midwestmanuals.com

Using a tool such as the MULTILOCK-TERMINAL HOUSING EXTRACTION TOOL AMP (P/N 755430-2), push the 3 wires of the grip harness out of connector housing. Note the position of the wires for reinstallation.

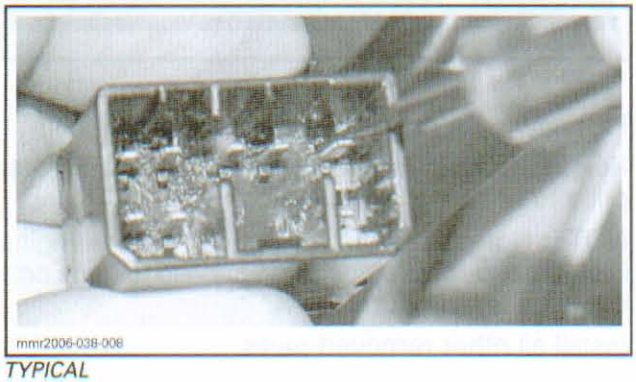

TYPICAL

Brake Side

Unscrew master cylinder from handlebar.

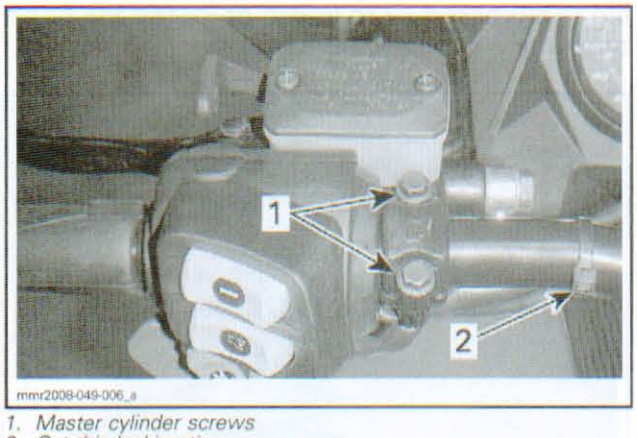

1. Master cylinder screws
2. Cut this locking tie

Loosen multifunction switch screws.

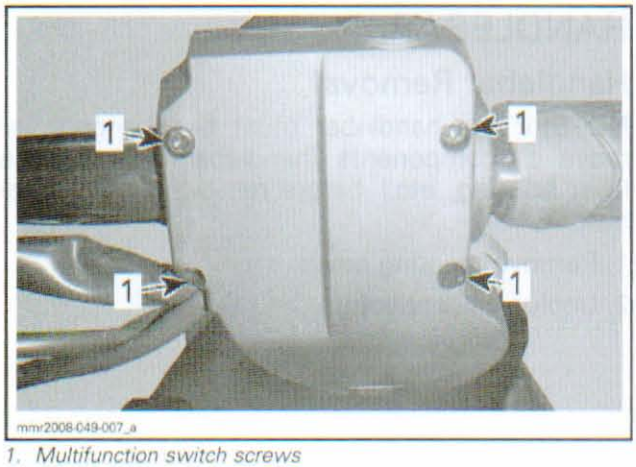

1. Multifunction switch screws

Move multifunction switch towards the steering column.

Remove the steering cover.

Unplug the heating element connector.

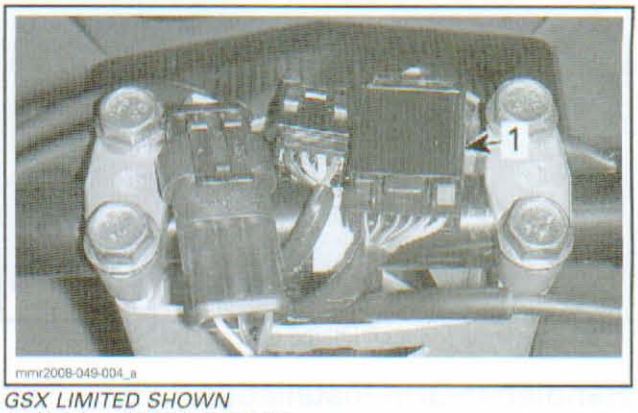

GSX LIMITED SHOWN
1. Heating element connector

Insert the open side of a 23 mm (7/8 in) wrench against the inner end of grip.

NOTICE **Pay attention not to damage wires with the wrench.**

Using a plastic hammer, tap on the side of the wrench end to make the grip slide out.

Using a tool such as the MULTILOCK-TERMINAL HOUSING EXTRACTION TOOL AMP (P/N 755430-2), push the 3 wires of the grip harness out of connector housing. Note the position of the wires for reinstallation.

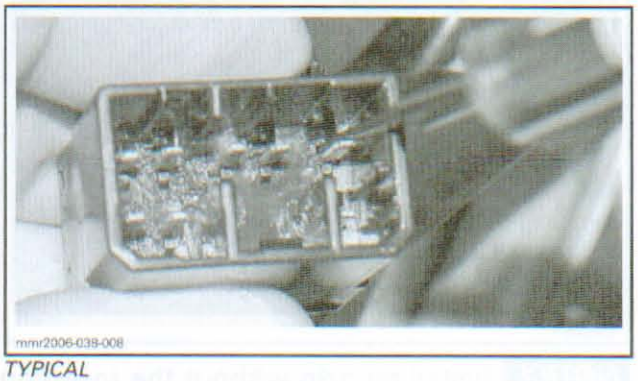

TYPICAL

Handlebar Grip Removal (Without Integrated Heating Element)

Remove grips by pulling while using compressed air, which will inflate or loosen the fit between the grip and handlebar, as shown on picture.

www.midwestmanuals.com

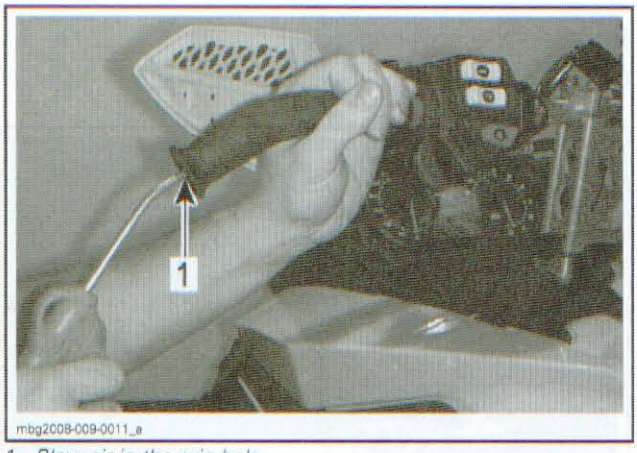

1. Blow air in the grip hole

Handlebar Grip Installation (With Integrated Heating Element)

GSX (Limited, Limited Touring, Sport) and MX Z (Adrenaline, Renegade, Trail)

Clean handlebar ends and inside of grip with isopropyl alcohol. Let dry before installation.

NOTICE **Handlebar end and inside of heating grip must be clean and dry before installing heating grip to ensure proper adhesion.**

Use the HEATED GRIP INSTALLER (P/N 529 035 897) to properly install grip.



NOTICE **Installing grip without the insertion tool is likely to damage its heating element.**

Position the insertion tool at the outside end of grip.

Using a plastic hammer, tap on tool to push grip on. Continue to tap until grip bottoms.

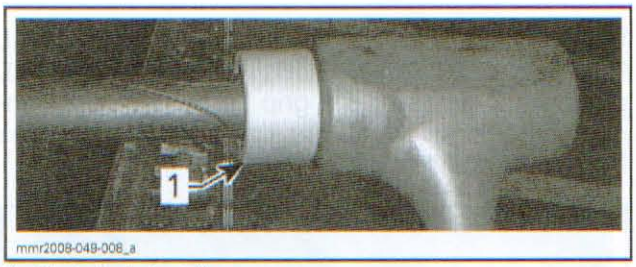

1. Heated grip installer

Properly route harness at the front of steering.

Reinstall terminals and re-plug connectors. Test grips to ensure they heat properly.

NOTE: Note that grips will not work if the engine is at idle speed. Electricity is supplied to grips only if engine is over 2000 RPM.

Install all other removed parts.

Handlebar Grip Installation (Without Integrated Heating Element)

Insert the handlebar grip on handlebar while blowing compressed air to inflate or loosen the fit between grip and handlebar.

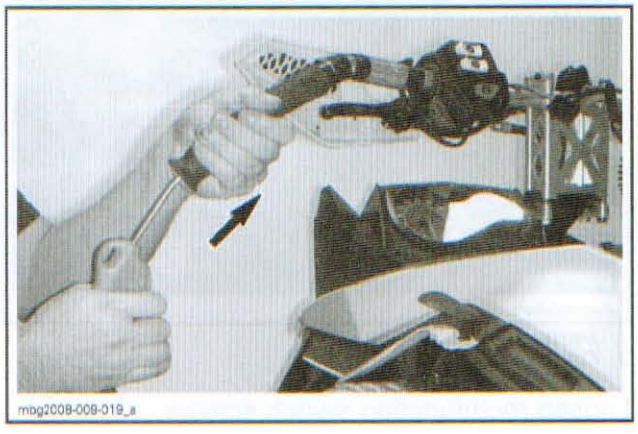

HANDLEBAR

Handlebar Removal

NOTE: If the handlebar must be changed, remove all components (handlebar grip, throttle lever housing, etc.) before removing it from vehicle.

1. Remove steering cover.
2. Unplug all connectors.

www.midwestmanuals.com

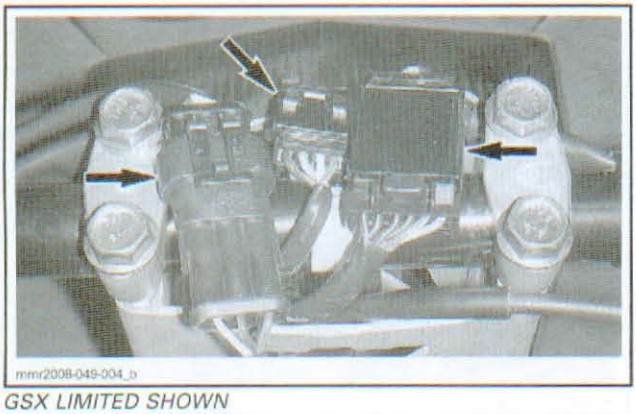

GSX LIMITED SHOWN

3. Remove handlebar retaining clamp screws.

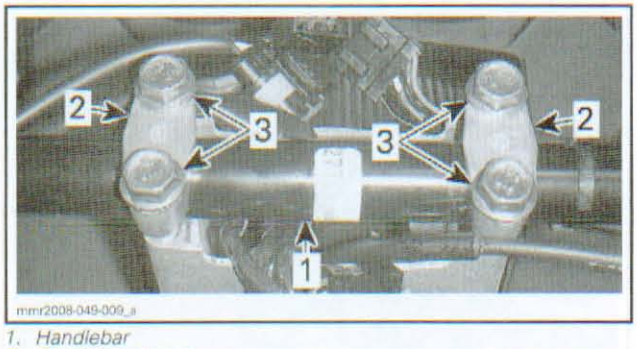

1. *Handlebar*
2. *Retaining clamps*
3. *Screws*

4. Remove handlebar from handlebar extension.

Handlebar Inspection

1. Inspect the handlebar for:
   - Damages
   - Cracks
   - Bending.
2. Replace if any of these problems is detected.

⚠ WARNING

Do not try to repair a defective handlebar.

3. Check handlebar clamps for cracks or distortion, replace if necessary.

Handlebar Installation

The installation is the reverse of the removal procedure. However, pay attention to the following.

Handlebar Strap

MX Z (Renegade, Renegade X) and SUMMIT (Everest, X)

1. Ensure to position strap symmetrically each side of handlebar retaining clamps.

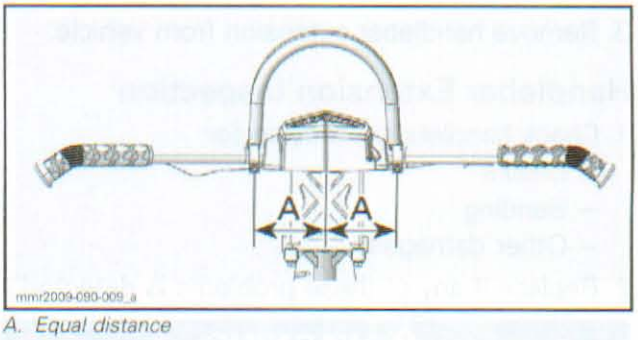

A. Equal distance

2. Tilt strap 5° ± 5° towards driver relative to handlebar extension.

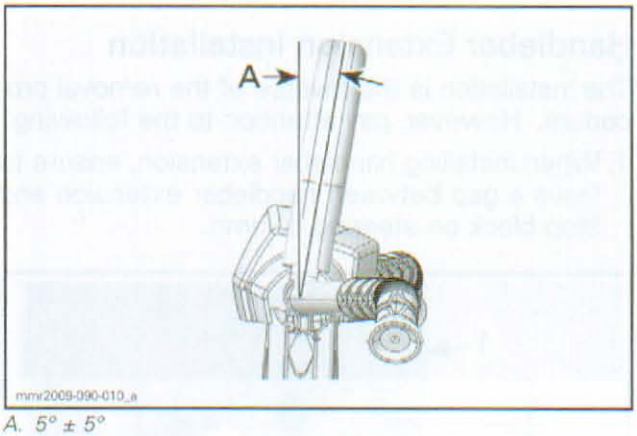

A. 5° ± 5°

3. Retaining clip and hardware must be installed in the same position on both strap ends.

HANDLEBAR EXTENSION

Handlebar Extension Removal

1. Remove *HANDLEBAR* from handlebar extension, see procedure above in this section.
2. Unscrew bolts retaining the extension to steering column.

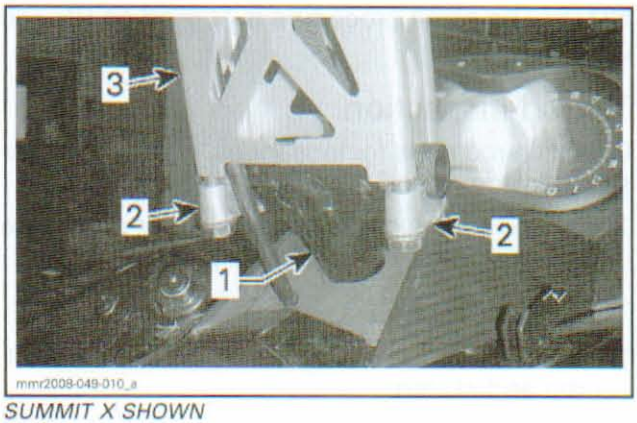

SUMMIT X SHOWN

1. *Steering column*
2. *Handlebar extension clamps*
3. *Handlebar extension*

www.midwestmanuals.com

3. Remove handlebar extension from vehicle.

Handlebar Extension Inspection

1. Check handlebar extension for:
   - Cracks
   - Bending
   - Other damages.
2. Replace if any of these problems is detected.

⚠ WARNING

Do not try to repair a defective handlebar extension.

Handlebar Extension Installation

The installation is the reverse of the removal procedure. However, pay attention to the following.

1. When installing handlebar extension, ensure to leave a gap between handlebar extension and stop block on steering column.

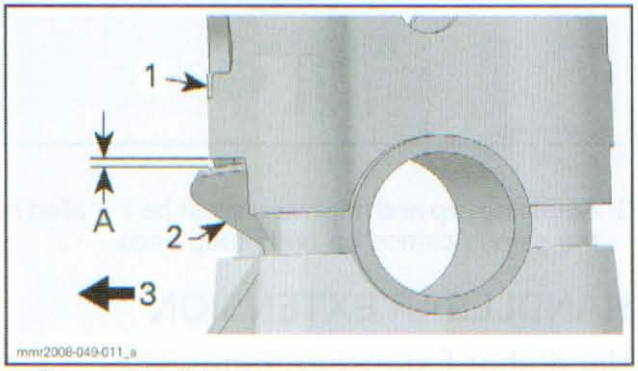

1. Bottom of handlebar extension
2. Steering column stop block
3. Front of vehicle
A. 1 mm (.039 in) minimum

TIE-ROD

NOTE: The same procedure is applied on RH and LH side.

Tie-rod Inspection

Check tie-rod ends for looseness. If play is excessive, replace tie-rod.

1. Check if the tie-rod is bend, crack or otherwise damage. Replace if necessary.

Tie-rod Removal

1. Remove the tie-rod ends from the steering column and ski leg.

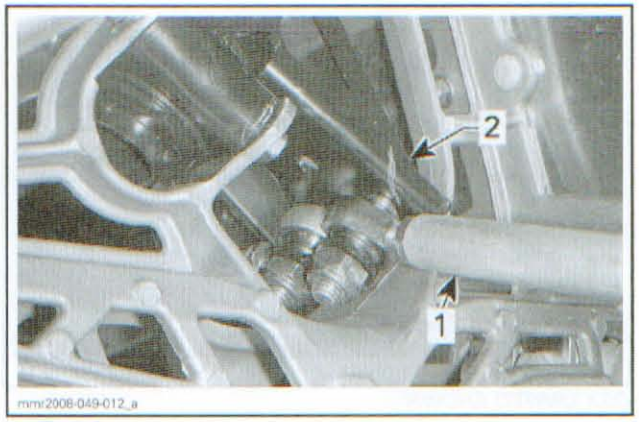

1. Tie-rod
2. Steering column

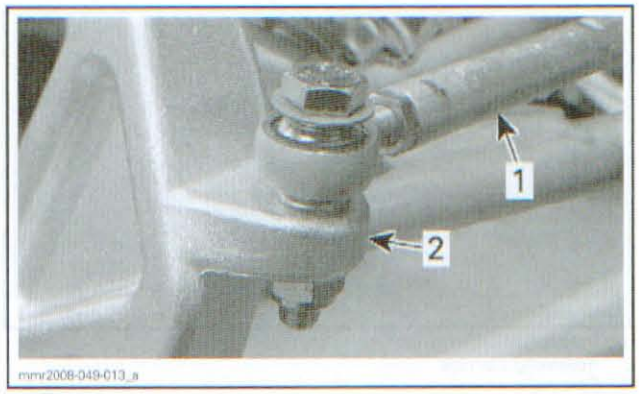

1. Tie-rod
2. Ski leg

2. Remove tie-rod from vehicle.

Tie-rod Installation

1. The installation is the reverse of the removal procedure. However, pay attention to the following.
2. Adjust the length of all tie-rod end to 30 mm (1.181 in) without tightening the jam nuts.

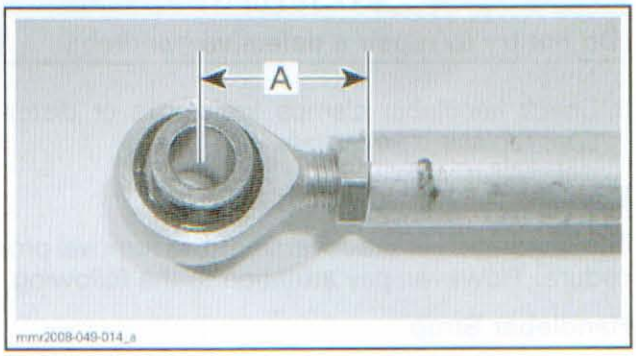

A. 30 mm (1.181 in)

⚠ WARNING

The maximum tie-rod end length not engaged in the tie rod must not exceed 34 mm (1.339 in).

www.midwestmanuals.com

3. Install tie-rod with the groove on ski leg side.

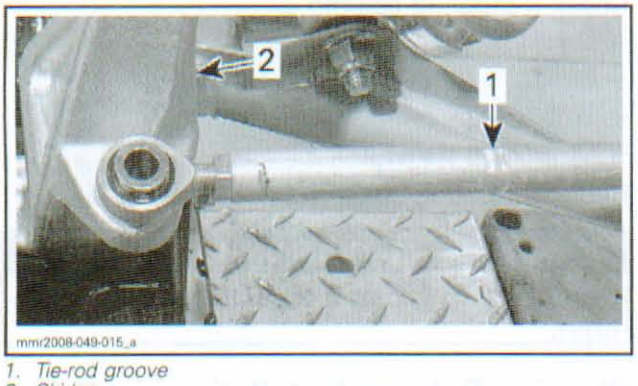

1. *Tie-rod groove*
2. *Ski leg*

4. On ski leg side, install hardened washers as shown.

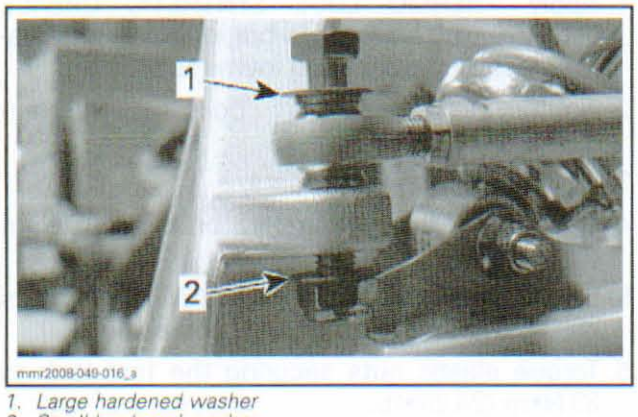

1. *Large hardened washer*
2. *Small hardened washer*

5. Install nuts retaining tie-rod ends. Torque them to 48 N•m (35 lbf•ft).
6. Perform the steering alignment, refer to *STEERING ALIGNMENT* in this section.

STEERING COLUMN

Steering Column Removal

1. Refer to *BODY* section to remove the following parts:
   - Seat
   - RH side panel
   - Hood
   - Console.
2. Remove *HANDLEBAR EXTENSION* from steering column, see procedure in this section.
3. Remove screws securing steering column upper support.
4. Remove screws securing side frame members to rear frame member.

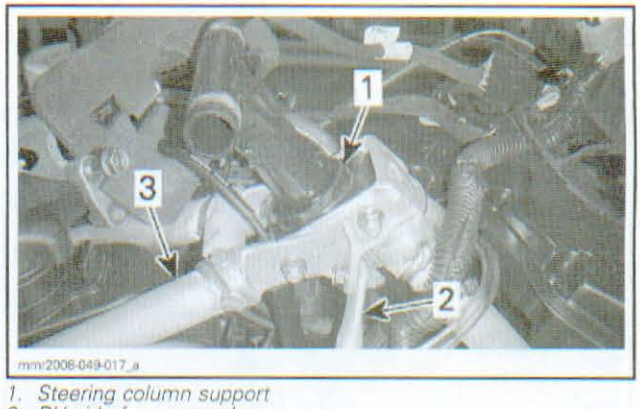

1. *Steering column support*
2. *RH side frame member*
3. *Rear frame member*

5. Remove trim panels covering the aft end of the rear frame members by pulling upward then pulling out (one each side).

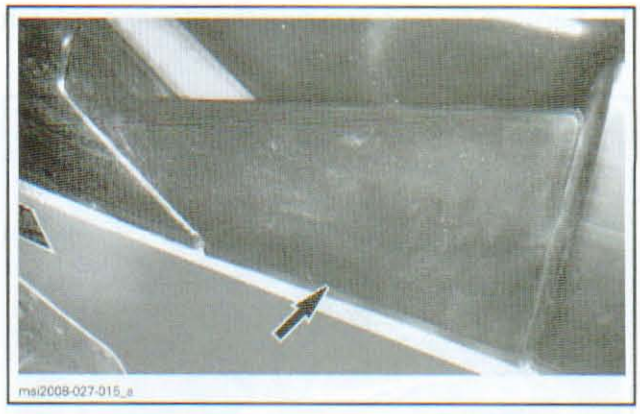

6. Remove elastic nut and shoulder bushing retaining the rear frame members (one each side) to the tunnel (discard nuts, keep shoulder bushings).

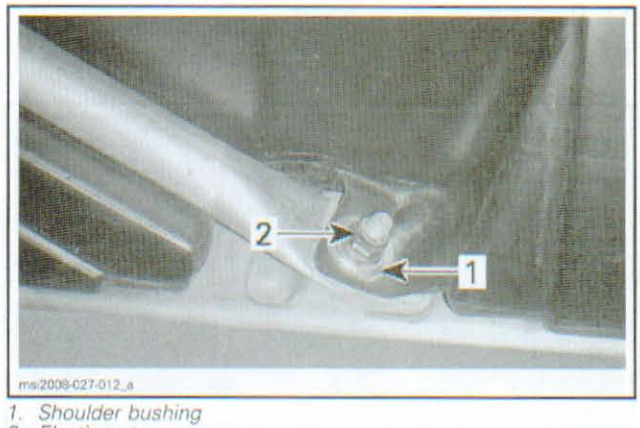

1. *Shoulder bushing*
2. *Elastic nut*

7. Remove the secondary air intake silencer. Refer to *AIR INTAKE SYSTEM* section.
8. Remove tuned pipe. Refer to *EXHAUST SYSTEM* section.

www.midwestmanuals.com

9. Remove the tie-rod ends from the steering column.

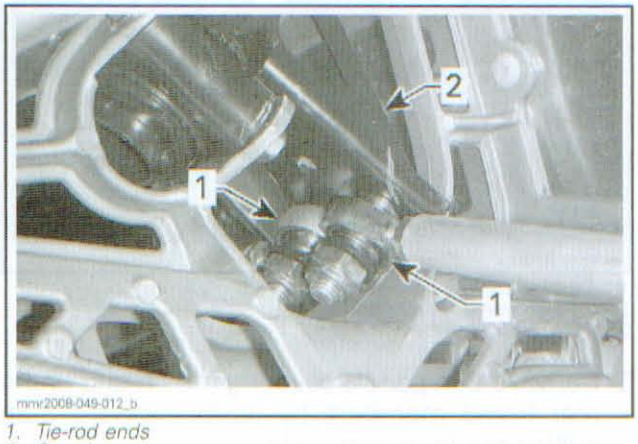

1. Tie-rod ends
2. Steering column

10. Remove screws securing the steering column lower support.



1. Steering column support screws
2. Steering column

11. Remove lower support.
12. Remove the steering column plate.



1. Steering column plate
2. Steering column

13. Pull steering column from top.

Steering Column Inspection

Check if steering column is:
- Cracked
- Bent
- Twist
- Otherwise damaged.

Replace steering column if necessary.

⚠ WARNING

Do not try to repair a defective steering column.

Steering Column Installation

The installation is the reverse of the removal procedure. However, pay attention to the followings.

1. Apply THERMO LUBE SYNTHETIC GREASE (P/N 219 700 417) on vibration dampers before installing upper and lower supports.
2. Tighten lower support bolts to 10 N•m (89 lbf•**in**).
3. Install rear frame members.
4. Tighten the upper support bolts to 18 N•m (159 lbf•**in**).
5. Install shoulder bushings and **NEW** elastic nuts on the rear frame members (one each side).
6. Torque elastic nuts securing the fuel tank to 33 N•m (24 lbf•ft).
7. Install all other removed parts.

www.midwestmanuals.com

BODY

SERVICE TOOLS

Description	Part Number	Page
FUEL TANK WRENCH	529 035 891	571
SUPERTANIUM™ DRILL BIT	529 031 800	566–567

GENERAL

CLEANING

Seat Cleaning

It is recommended to clean the seat with a solution of warm soapy water, using a soft clean cloth.

NOTICE Avoid use of harsh detergents such as strong soaps, degreasing solvents, abrasive cleaners, paint thinners, etc. that may cause damage to the seat cover.

Plastic Cleaning

Clean the vehicle thoroughly, removing all dirt and grease accumulation.

To clean use a soft clean cloth and either soapy water or isopropyl alcohol.

To remove grease, oil or glue use isopropyl alcohol.

NOTICE Do not apply isopropyl alcohol or acetone directly on decals.

NOTICE The following products must not be applied on the plastic components used on the vehicles:

- Gasoline
- Brake fluid
- Kerosene
- Diesel fuel
- Lighter fluid
- Varsol
- Naphtha
- Acetone
- Strong detergents
- Abrasive cleaners
- Waxes containing an abrasive or a cleaning agent in their formula.

Apply a non abrasive wax on glossy finish only.

BODY PARTS REPAIR

The very first step before repairing plastic materials is to find out exactly which type of material is involved.

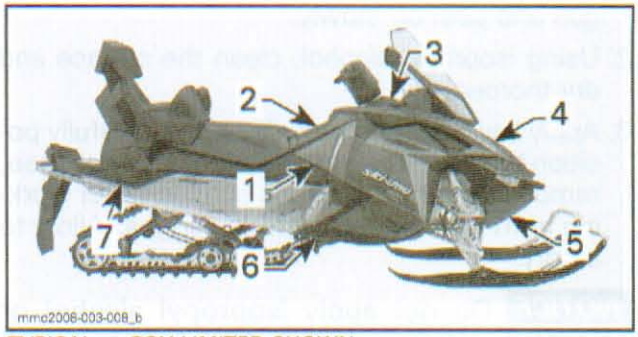

TYPICAL — GSX LIMITED SHOWN

PLASTIC PARTS		
PARTS		MATERIAL
1	Side panel	Polypropylene GTX LE: Surlyn/popypropylene
2	Console	Surlyn
3	Gauge support	Polypropylene
4	Hood	Surlyn
5	Front bottom pan	Polypropylene
6	Side bottom pan	Polypropylene
7	Trunk	Polypropylene

NOTICE Some repair products are not compatible with certain plastics.

⚠ WARNING

Polycarbonate windshields must never be repaired by welding or otherwise.

The following company provides a complete line of products to repair plastic materials:

www.midwestmanuals.com

CREST INDUSTRIES, INC.
Trenton, MI 48183
Phone: 734 479-4141
Toll Free: 1 800 822-4100
Fax: 734 479-4040
E-Mail: info@crestauto.com
www.crestauto.com

PROCEDURES

DECAL

Decal Replacement

1. To remove a decal; heat old decal with a heat gun and peel off slowly.
2. Using isopropyl alcohol, clean the surface and dry thoroughly.
3. Apply liquid soap to new decal and carefully position the decal. Using a sponge or a squeegee, remove the air bubbles and surplus water working from the center toward the edges. Allow to air dry.

NOTICE **Do not apply isopropyl alcohol or solvent directly on decals. Use only in a well ventilated area.**

SIDE PANEL

Side Panel Removal

NOTE: The same procedure applies for RH or LH side.

1. Stretch and unhook the latches.

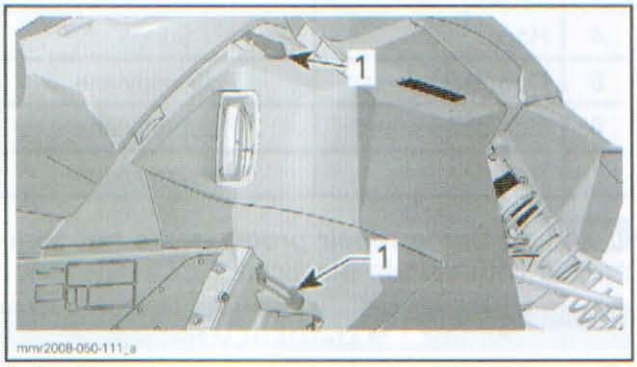

1. Latches

2. Open side panel.
3. Lift up the side panel and move the lower hinge out of its slot.

NOTE: On GTX LE, move lower and center hinges out of slots.

4. Free the upper hinge from its slot by lowering the side panel.

Side Panel Installation

The installation is the reverse of the removal procedure.

REWIND STARTER HANDLE HOUSING

Rewind Starter Handle Housing Removal

1. Open RH side panel.
2. Remove screws retaining housing to oil reservoir.

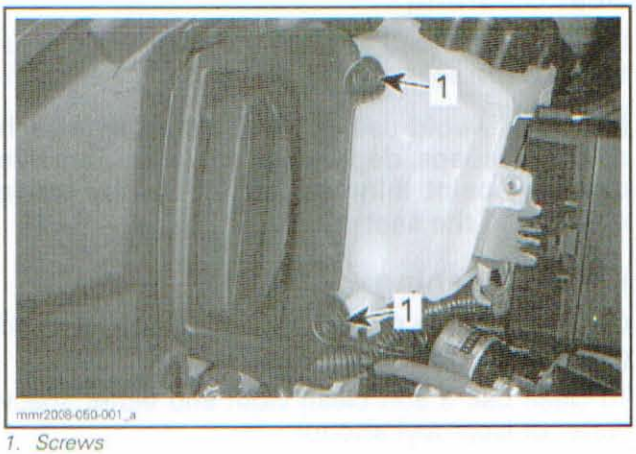

1. Screws

3. Pull on housing to release it from oil reservoir.



1. Housing

4. Remove rewind starter handle. Refer to *REWIND STARTER* section.

www.midwestmanuals.com

Rewind Starter Handle Housing Installation

Installation is the reverse of removal procedure. Pay attention to the following details.

1. To properly install rewind starter handle housing, it must be pushed vigorously into oil reservoir. Ensure it is properly set in place before installing hardware.
2. Torque screws to 1 N•m (9 lbf•**in**).

HOOD

Hood Removal

All Models except GTX LE

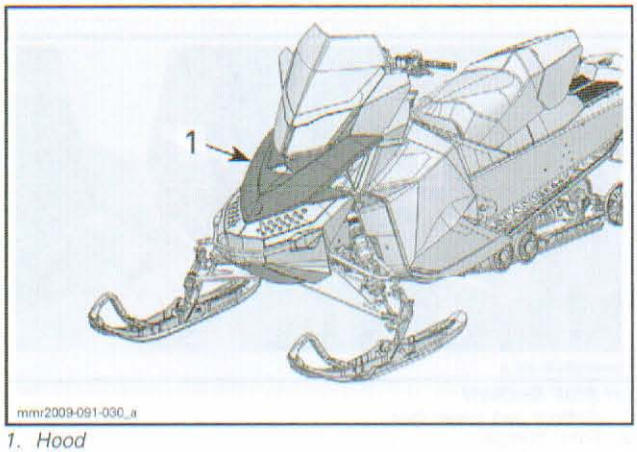

1. Hood

1. Stand in front of vehicle.
2. Pull outwards on both sides of hood aft section.



3. Slide hood forwards.
4. Remove hood from vehicle.

GTX LE

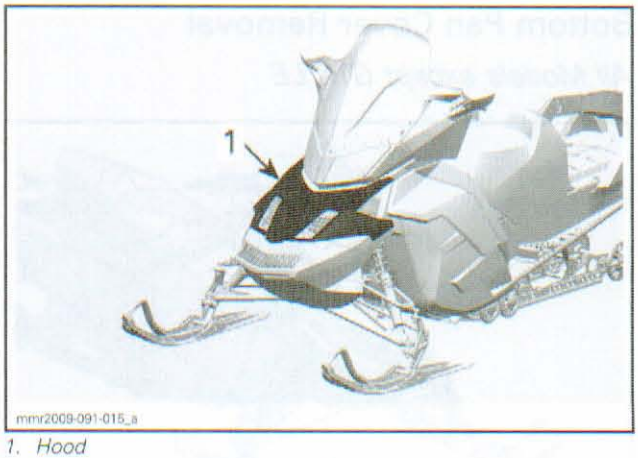

1. Hood

1. Pull up the rear end of the hood on both sides.
2. Lift the rear end of the hood until it disengages from the bottom pan.

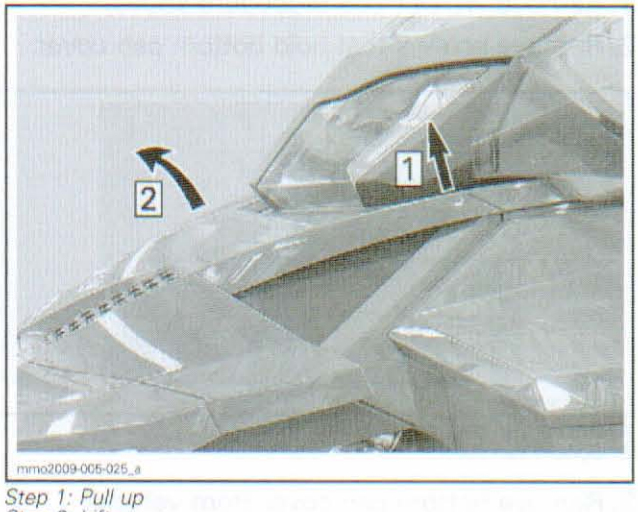

Step 1: Pull up
Step 2: Lift

Hood Installation

The installation is the reverse of removal procedure.

www.midwestmanuals.com

BOTTOM PAN COVER

Bottom Pan Cover Removal

All Models except GTX LE

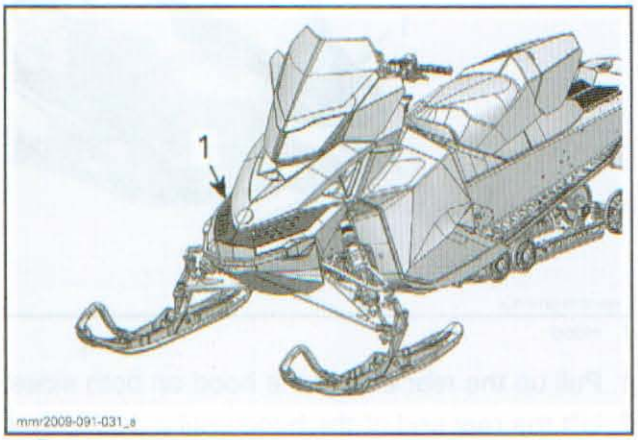

1. Bottom pan cover

1. Remove *HOOD*, see procedure above.
2. Remove screws that hold bottom pan cover.

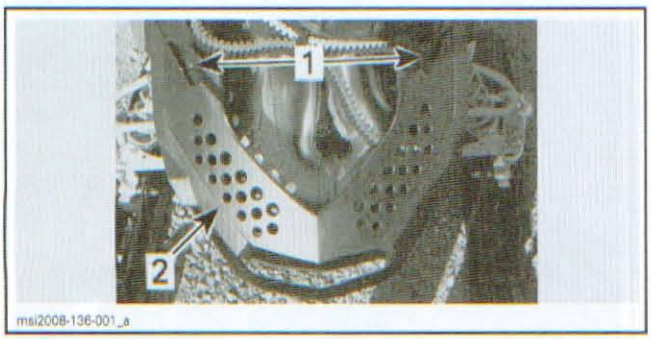

1. Bottom pan cover screws
2. Bottom pan cover

3. Remove bottom pan cover from vehicle.

GTX LE

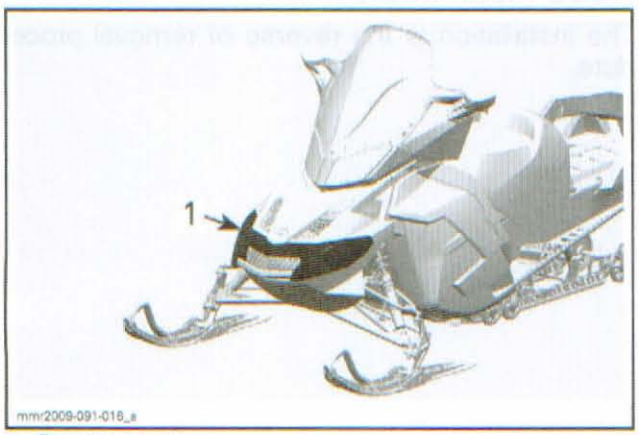

1. Bottom pan cover

1. Lower both locks located under the front bumper.

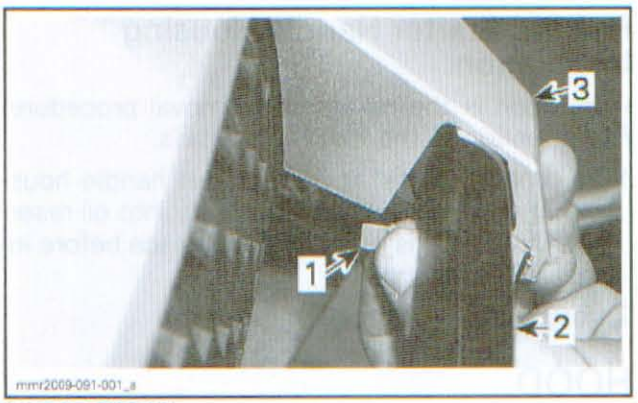

LH SIDE SHOWN
1. Bottom pan cover lock
2. Front bumper
3. Bottom pan cover

2. Pull locks toward the front of vehicle.

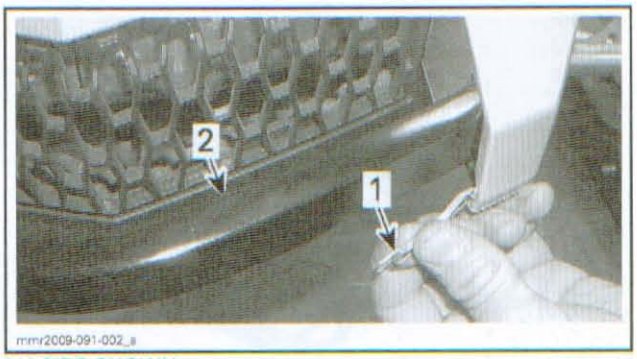

LH SIDE SHOWN
1. Bottom pan cover lock
2. Front bumper

3. Move the ends of cover away to release cover tabs.

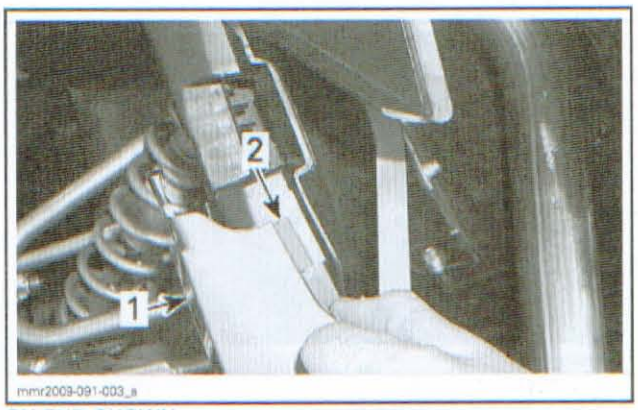

RH END SHOWN
1. Bottom pan cover end
2. Cover tab

4. Hold both ends of the cover and pull the cover in your direction.

NOTE: Four retaining tabs lock the cover to the bottom pan. The cover could be hard to remove, pull it vigorously.

www.midwestmanuals.com

Bottom Pan Cover Installation

The installation is the reverse of the removal procedure. However, pay attention to the following.

GTX LE

1. When installing bottom pan cover, make sure to insert cover tabs into bottom pan slots.

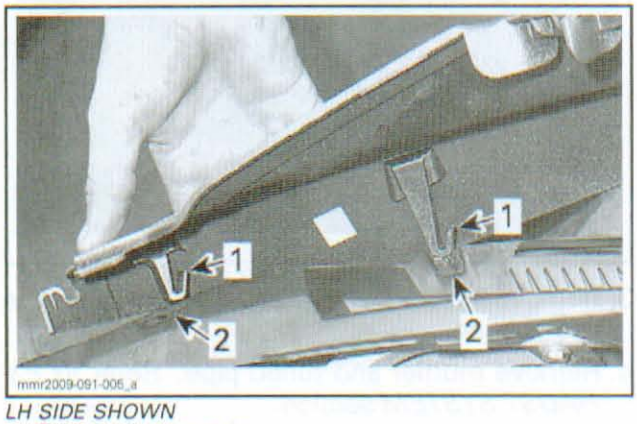

LH SIDE SHOWN
1. *Bottom pan cover tabs*
2. *Bottom pan slots*

2. Replace front locks in their original position.
3. Insert both cover tabs in their slots.

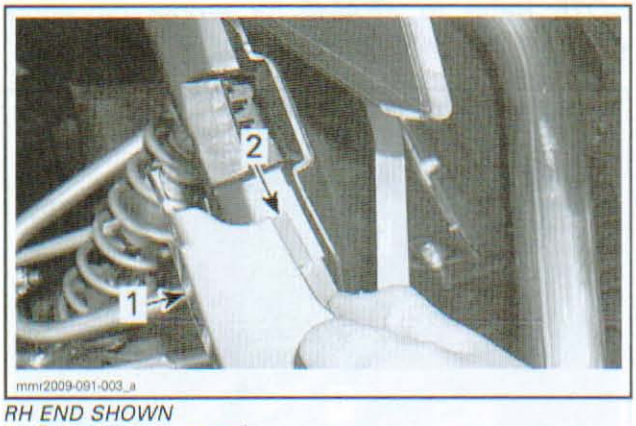

RH END SHOWN
1. *Bottom pan cover end*
2. *Cover tab*

FRONT BUMPER

Front Bumper Removal

All Models except GTX LE

1. Remove *HOOD*, see procedure in this section.
2. Remove *BOTTOM PAN COVER*, see procedure in this section.
3. Remove existing rivets by drilling them.

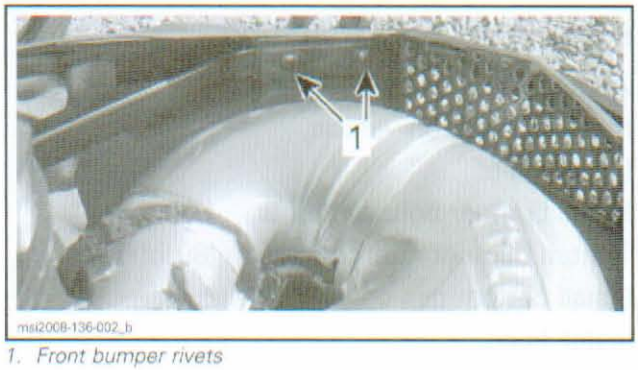

1. *Front bumper rivets*

4. Remove front bumper bolts.

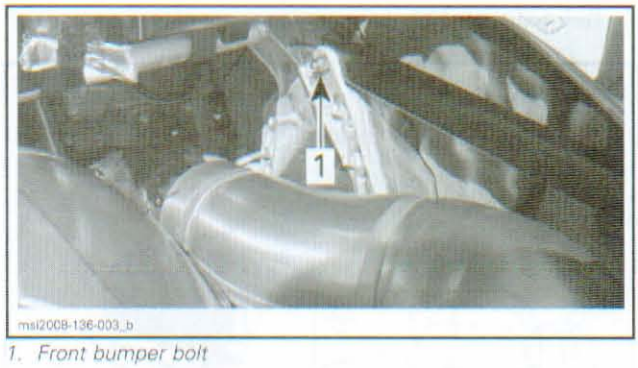

1. *Front bumper bolt*

5. Remove bumper from vehicle by pulling it toward the front.

GTX LE

1. Remove *HOOD* and *BOTTOM PAN COVER*, see procedures in this section.
2. Remove screws securing front bumper to frame.

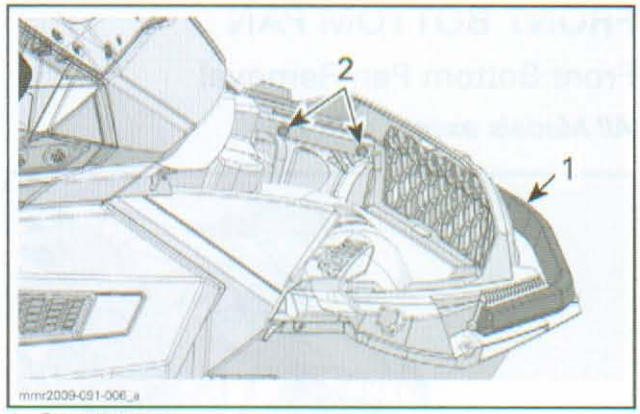

1. *Front bumper*
2. *Front bumper screws*

3. Remove bumper from vehicle by pulling it toward the front of vehicle.

www.midwestmanuals.com

Front Bumper Installation

All Models except GTX LE

Install bumper on vehicle.

Install rivets.

Install bumper bolts and nuts.

Tighten bumper nuts to 10 N•m (89 lbf•**in**).

Install bottom pan cover.

Install hood.

GTX LE

1. Install bumper on vehicle. Position the narrow flat side on top.

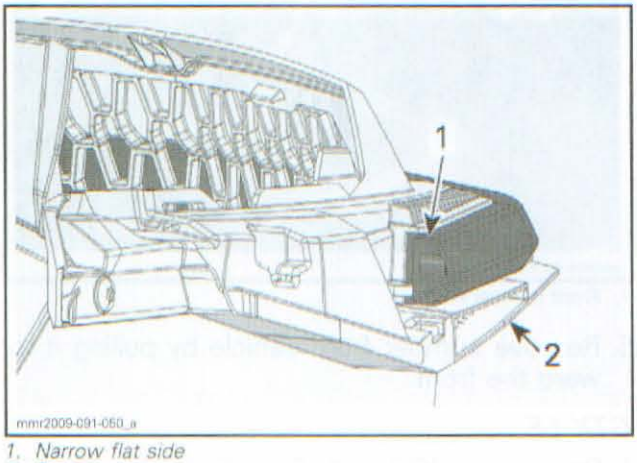

1. Narrow flat side
2. Bottom pan

2. Tighten bumper screws to 10 N•m (89 lbf•**in**).
3. Install bottom pan cover and hood.

FRONT BOTTOM PAN

Front Bottom Pan Removal

All Models except GTX LE

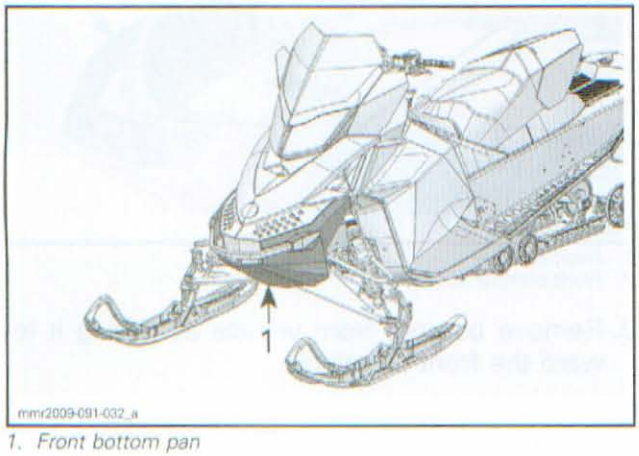

1. Front bottom pan

1. Lift front of vehicle until skis are off the ground.
2. Place the front portion of frame on a wooden box to support it securely.

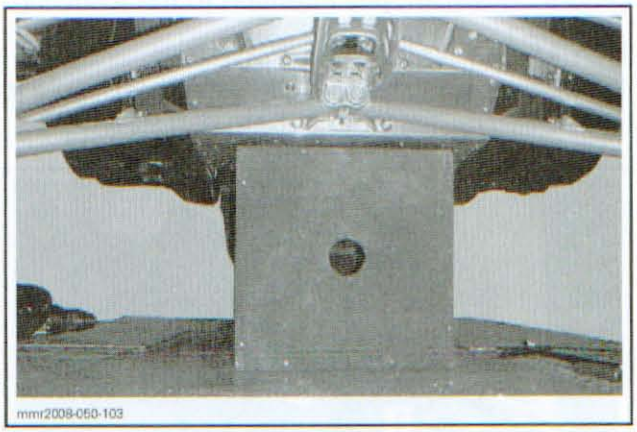

3. Remove *FRONT BUMPER*, see procedure in this section.
4. Remove muffler and tuned pipe. Refer to *EXHAUST SYSTEM* section.
5. Remove front shock absorbers.
6. Using an angle drill and a SUPERTANIUM™ DRILL BIT (P/N 529 031 800), remove all rivets retaining bottom pan.

NOTE: Refer to *FRAME* for proper procedure when drilling rivets retaining plastic.

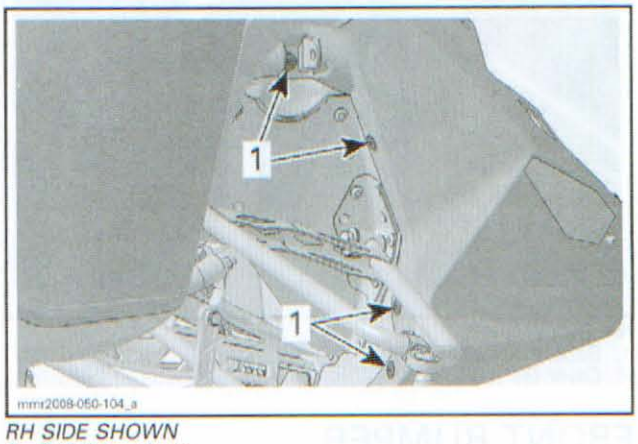

RH SIDE SHOWN
1. Drill these rivets

www.midwestmanuals.com

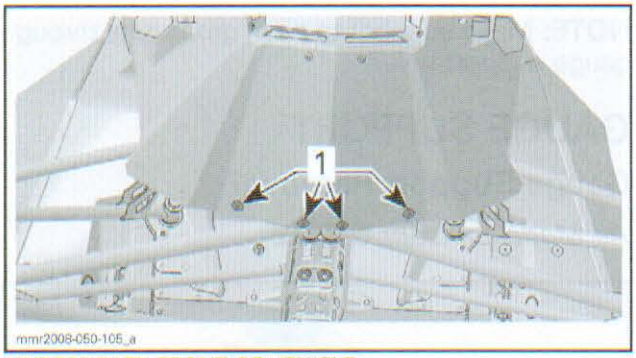

UNDERNEATH FRONT OF VEHICLE
1. Drill these rivets

7. Remove bottom pan.

GTX LE

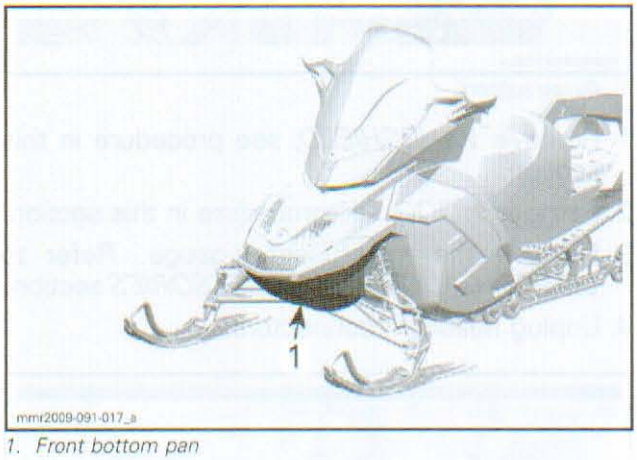

1. Front bottom pan

1. Lift front of vehicle until skis are off the ground.
2. Place the front portion of frame on a wooden box to support it securely.

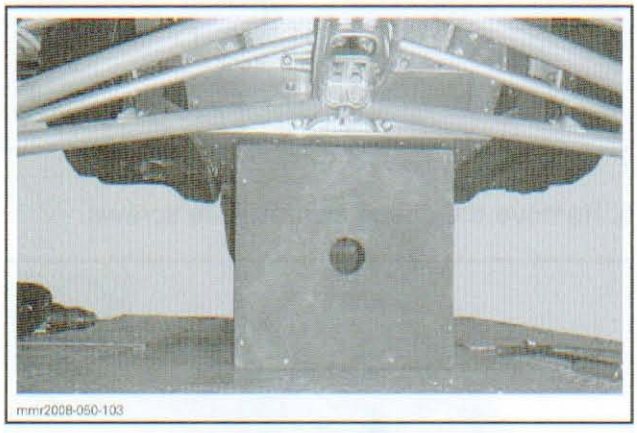

3. Remove *FRONT BUMPER*, see procedure in this section.
4. Remove muffler and tuned pipe. Refer to *EXHAUST SYSTEM* section.
5. Remove front shock absorbers.
6. Using an angle drill and a SUPERTANIUM™ DRILL BIT (P/N 529 031 800), remove all rivets retaining front bottom pan.

NOTE: Refer to *FRAME* for proper procedure when drilling rivets retaining plastic.

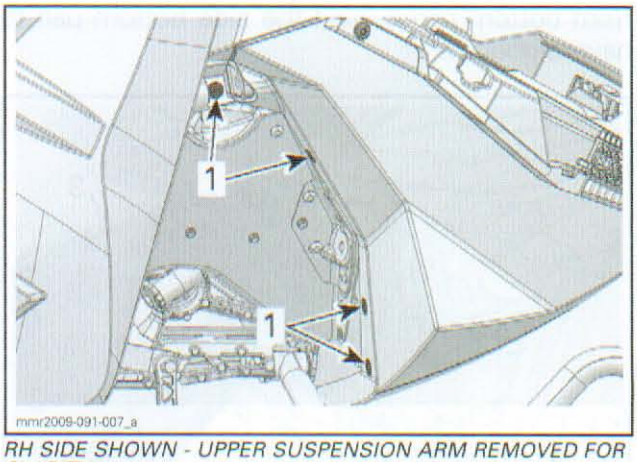

RH SIDE SHOWN - UPPER SUSPENSION ARM REMOVED FOR CLARITY
1. Drill these rivets

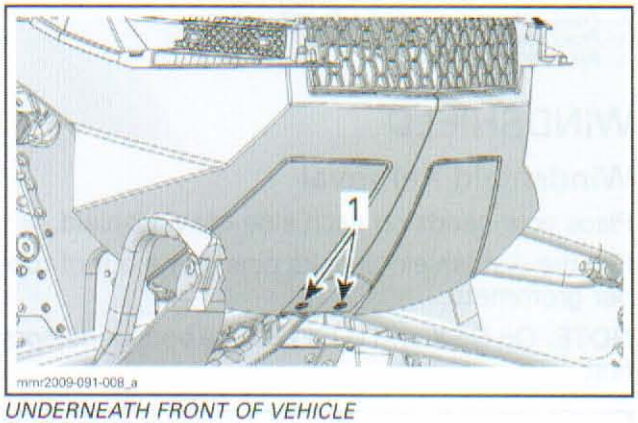

UNDERNEATH FRONT OF VEHICLE
1. Drill these rivets

7. Remove screws securing the top of front bottom pan.

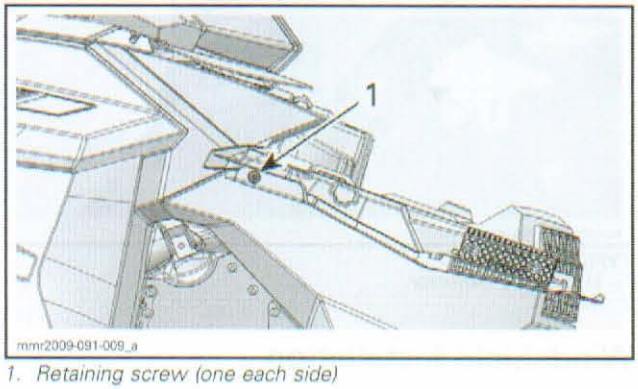

1. Retaining screw (one each side)

8. Remove bottom pan.

www.midwestmanuals.com

Front Bottom Pan Installation

The installation is the reverse of removal procedure. However, pay attention to the following.

GTX LE

Above shock absorber upper bracket, install the front bottom pad behind the side bottom pan to have a good fit.

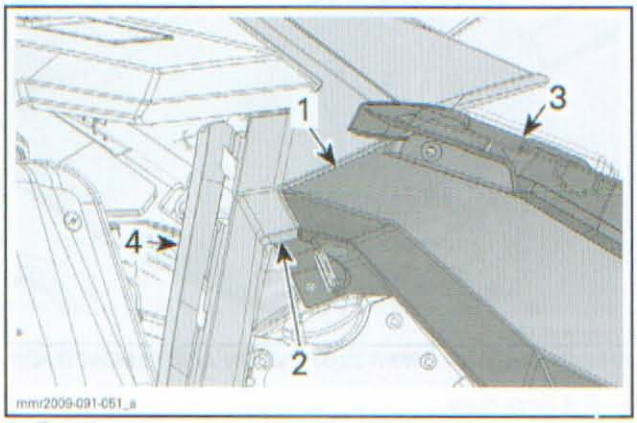

1. *Front bottom pan over side bottom pan*
2. *Front bottom pan behind side bottom pan*
3. *Front bottom pan*
4. *RH side bottom pan*

WINDSHIELD

Windshield Removal

Place your hands on each side of windshield.

Pull the windshield until its pins come out of rubber grommets.

NOTE: On GSX and GTX LE, free both deflectors first.

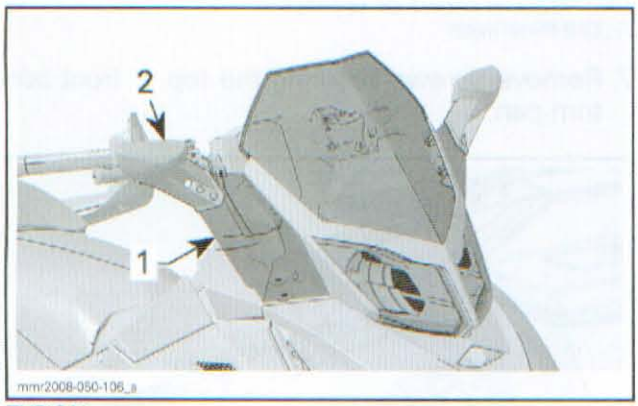

TYPICAL
1. *Windshield deflector*
2. *Mirror*

Windshield Installation

The installation is the reverse of removal procedure.

NOTE: Make sure not to push grommets through gauge support holes.

GAUGE SUPPORT

Gauge Support Removal

All Models except GTX LE

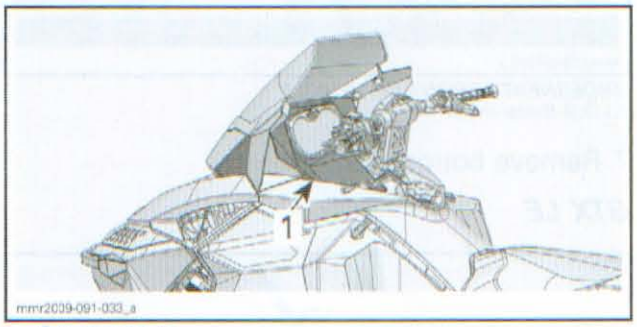

1. *Gauge support*

1. Remove *WINDSHIELD*, see procedure in this section.
2. Remove *HOOD*, see procedure in this section.
3. Remove the multifunction gauge. Refer to *LIGHTS, GAUGE AND ACCESSORIES* section.
4. Unplug headlight connectors.

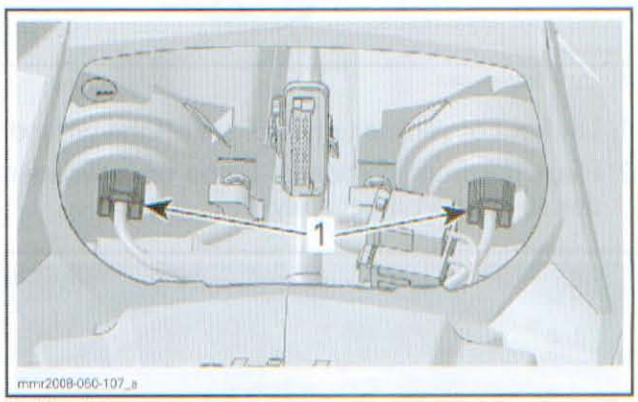

1. *Headlight connectors*

5. Remove the gauge support side screws.

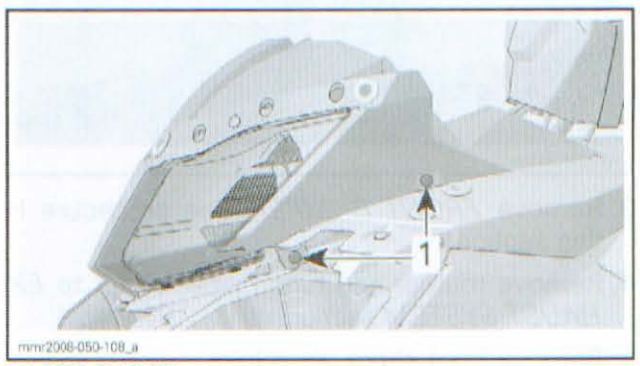

LH SIDE SHOWN
1. *Gauge support side screws*

www.midwestmanuals.com

6. Remove the screw under front of headlights.

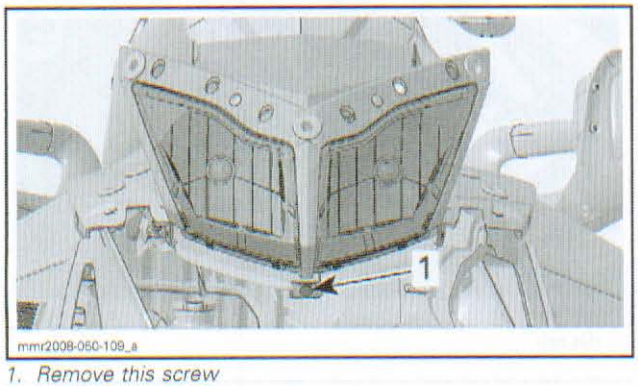

1. Remove this screw

7. Slide gauge support forwards the lift it.
8. On **GSX models**, unplug the 12-volt power outlet connectors.

GTX LE

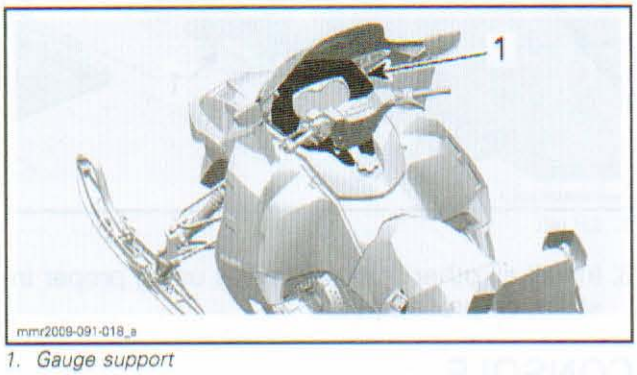

1. Gauge support

1. Remove *WINDSHIELD*, see procedure in this section.
2. Remove *CONSOLE*, see procedure in this section.
3. Remove the multifunction gauge. Refer to *LIGHTS, GAUGE AND ACCESSORIES* section.
4. Unplug headlight connectors.
5. Remove screws securing the gauge support.

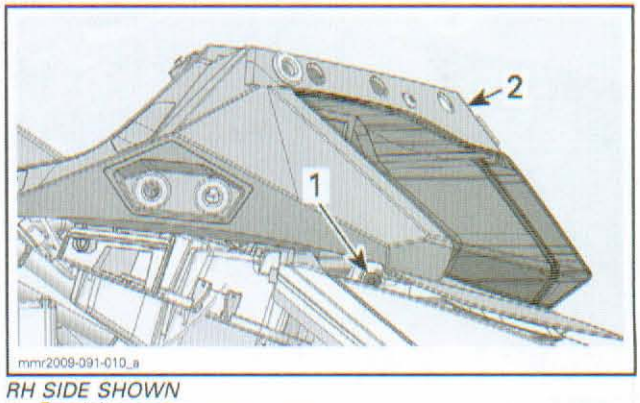

RH SIDE SHOWN
1. Retaining screw
2. Gauge support

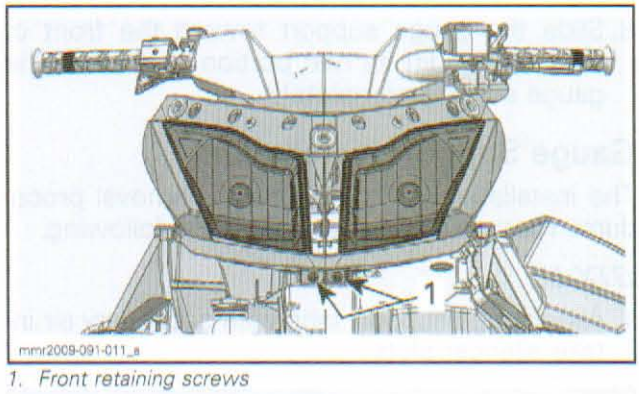

1. Front retaining screws

6. Unplug the 12-volt power outlet, the DESS post and the visor outlet.
7. On LH and RH sides, press and hold the tabs securing gauge support to secondary air intake silencer.

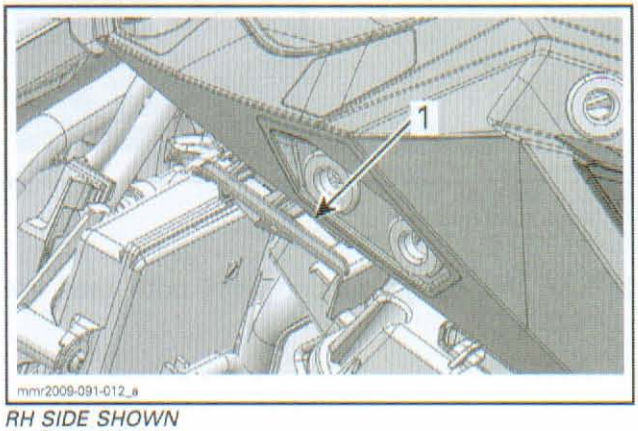

RH SIDE SHOWN
1. Press this tab

www.midwestmanuals.com

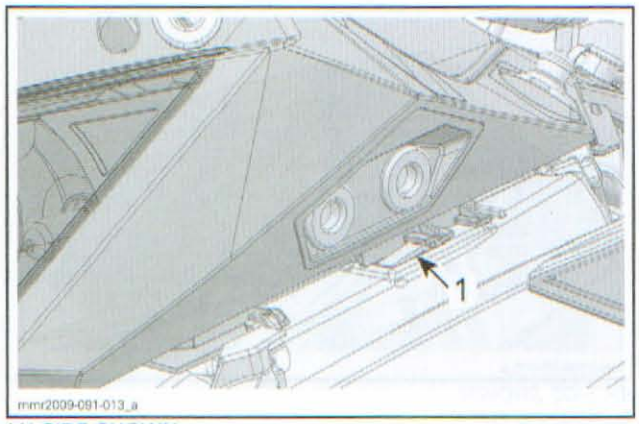

LH SIDE SHOWN
1. Press this tab

8. Slide the gauge support toward the front of vehicle then lift its rear portion to remove the gauge support completely.

Gauge Support Installation

The installation is the reverse of removal procedure. However, pay attention to the following.

GTX LE

1. Align gauge support tabs with secondary air intake silencer slots.

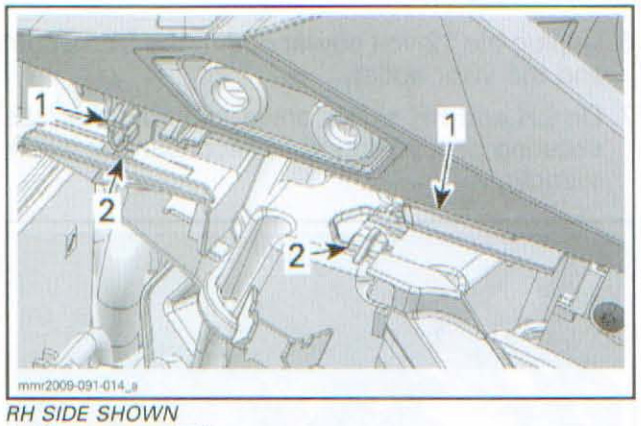

RH SIDE SHOWN
1. Gauge support tabs
2. Secondary air intake silencer slots

2. Push the gauge support until both tabs are locked.

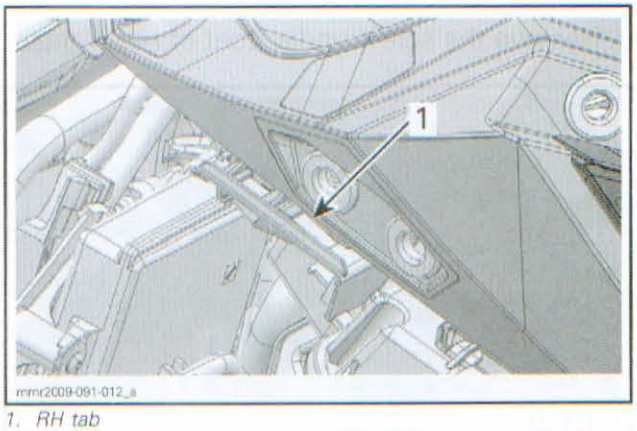

1. RH tab

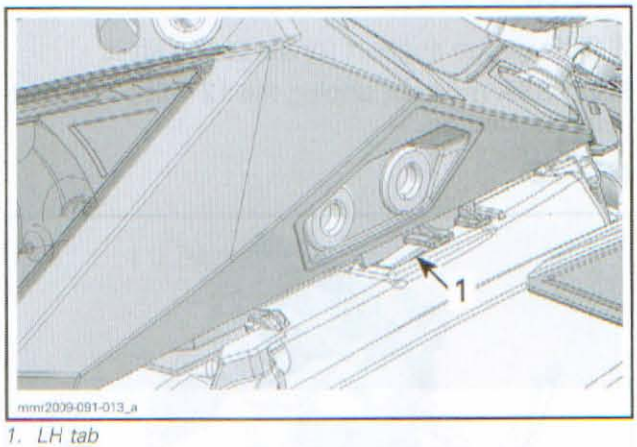

1. LH tab

3. Install all other removed parts using proper installation procedures.

CONSOLE

Console Removal

All Models except GTX LE

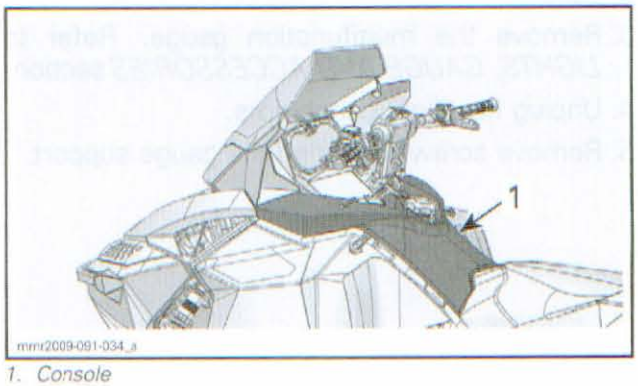

1. Console

1. Remove LH and RH side panels.
2. Remove seat.
3. Remove the *GAUGE SUPPORT*, see procedure in this section.

www.midwestmanuals.com

4. Remove screws securing both sides of console front section.

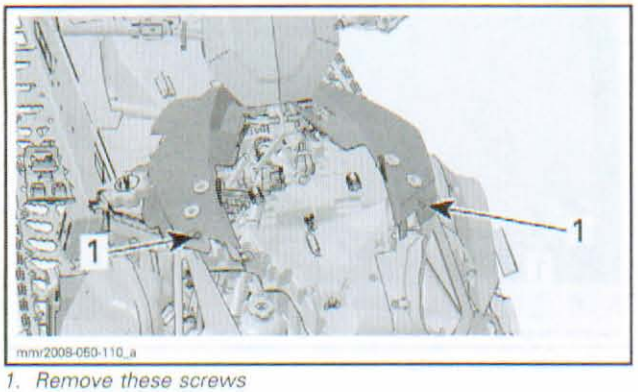

1. Remove these screws

5. Remove fuel tank cap.
6. Using the FUEL TANK WRENCH (P/N 529 035 891), unscrew the fuel tank nut.

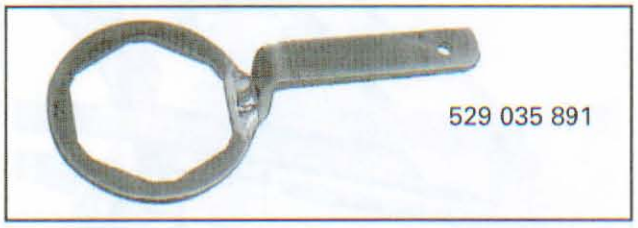

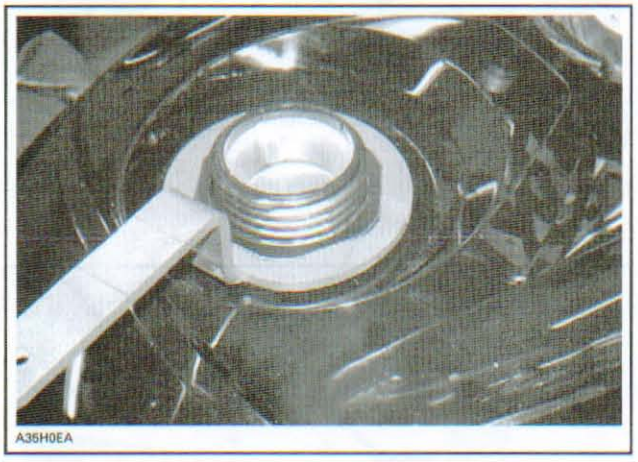

7. Unlock console clips located under gauge support (two each side).

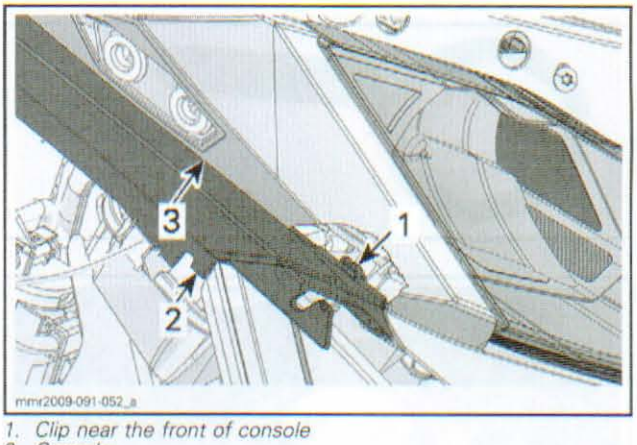

1. Clip near the front of console
2. Console
3. Gauge support

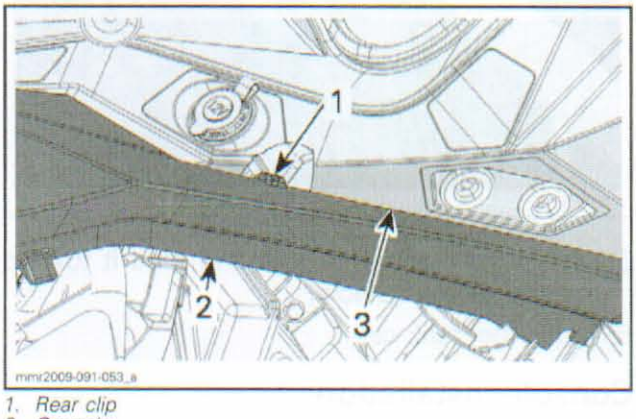

1. Rear clip
2. Console
3. Gauge support

8. Lift up the console and unplug all connectors.
9. Install fuel tank cap.

GTX LE



1. Console

1. Remove LH and RH side panels.
2. Remove seat.
3. Remove fuel tank cap.
4. Using the FUEL TANK WRENCH (P/N 529 035 891), unscrew the fuel tank nut.

www.midwestmanuals.com

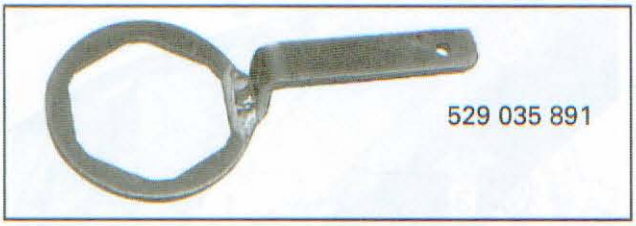

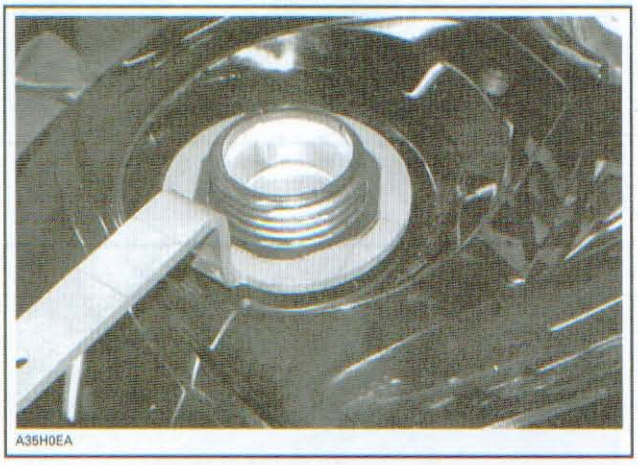

5. Lift up the rear of console and slide it toward the rear of the vehicle.
6. Install fuel tank cap.

Console Installation

The installation is the reverse of removal procedure.

REAR RACK (GTX SPORT/LE)

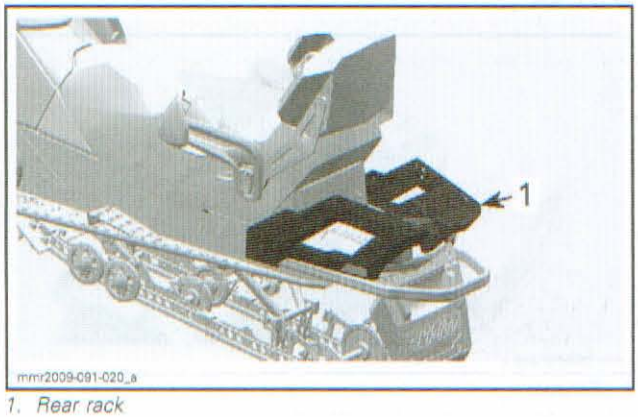

1. Rear rack

Rear Rack Removal

1. Remove passenger's seat.
2. Drill rivets (4) securing the radiator cover.

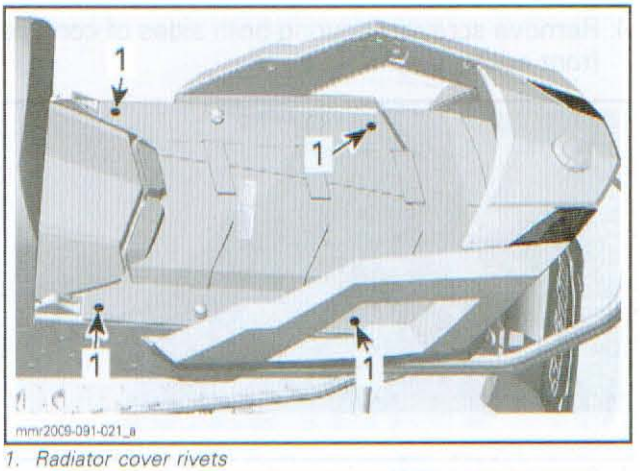

1. Radiator cover rivets

3. Remove the rear bumper.

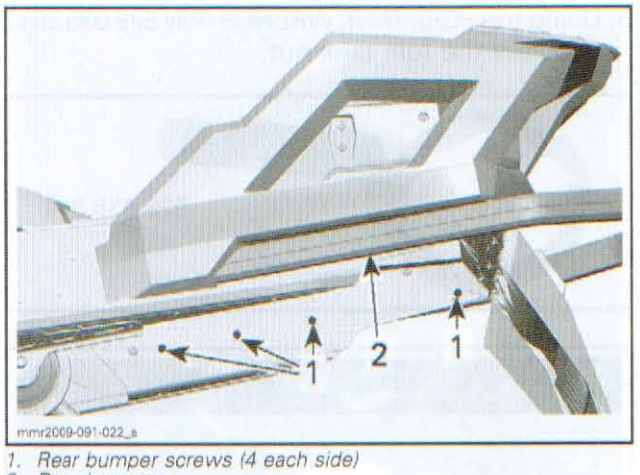

1. Rear bumper screws (4 each side)
2. Rear bumper

4. Remove screws (6) securing the rear rack assembly to tunnel.

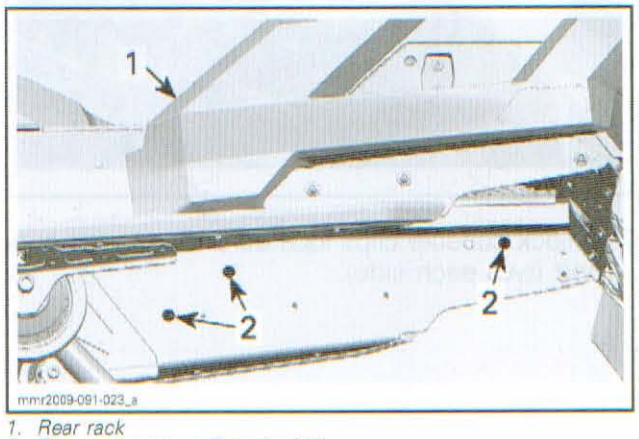

1. Rear rack
2. Rear rack screws (3 each side)

5. Remove rear rack.

www.midwestmanuals.com

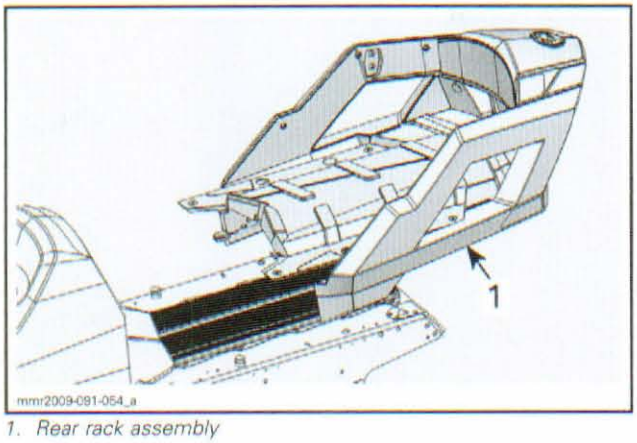

1. Rear rack assembly

Rear Rack Disassembly

1. Remove the taillight cover by pulling up the rear end of cover.

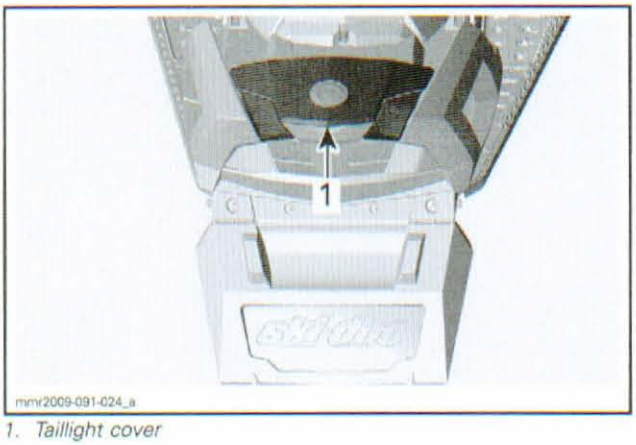

1. Taillight cover

2. Remove screw securing taillight compartment to radiator cover.

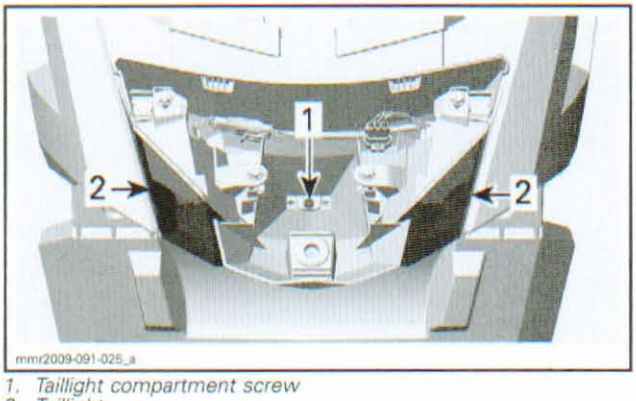

1. Taillight compartment screw
2. Taillight

3. Turn rear rack up side down.
4. Remove screws retaining radiator cover to rear rack arms.

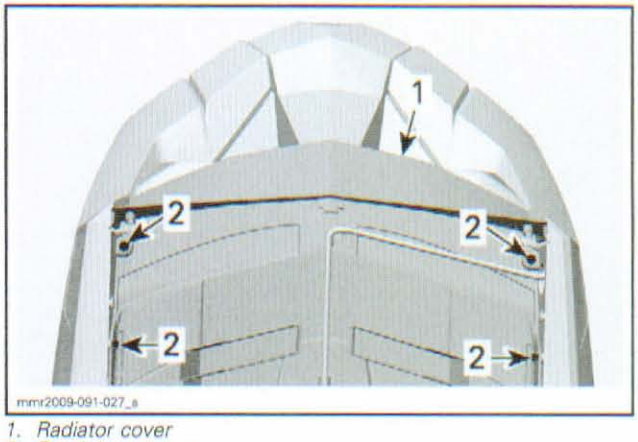

1. Radiator cover
2. Retaining screws

5. Detach taillight harness to remove radiator cover.

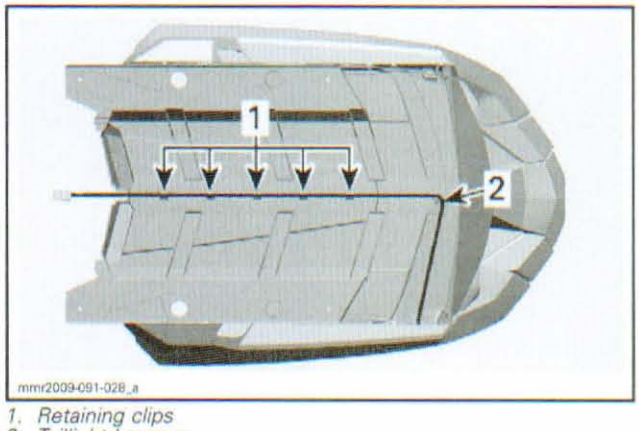

1. Retaining clips
2. Taillight harness

6. Unplug taillight connectors.
7. Remove screws securing taillight, rack arms and taillight compartment together.

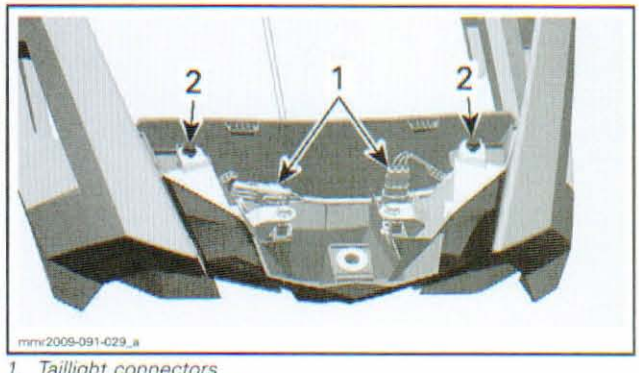

1. Taillight connectors
2. Remove taillight screws

8. Pull harness inside taillight compartment and separate parts.

Rear Rack Assembly and Installation

The assembly/installation is the reverse of the disassembly and removal procedures.

www.midwestmanuals.com

www.midwestmanuals.com

FRAME

SERVICE TOOLS

Description	Part Number	Page
SUPERTANIUM DRILL BIT	529 031 800	577

SERVICE PRODUCTS

Description	Part Number	Page
XP-S SYNTHETIC CHAINCASE OIL	413 803 300	577

www.midwestmanuals.com

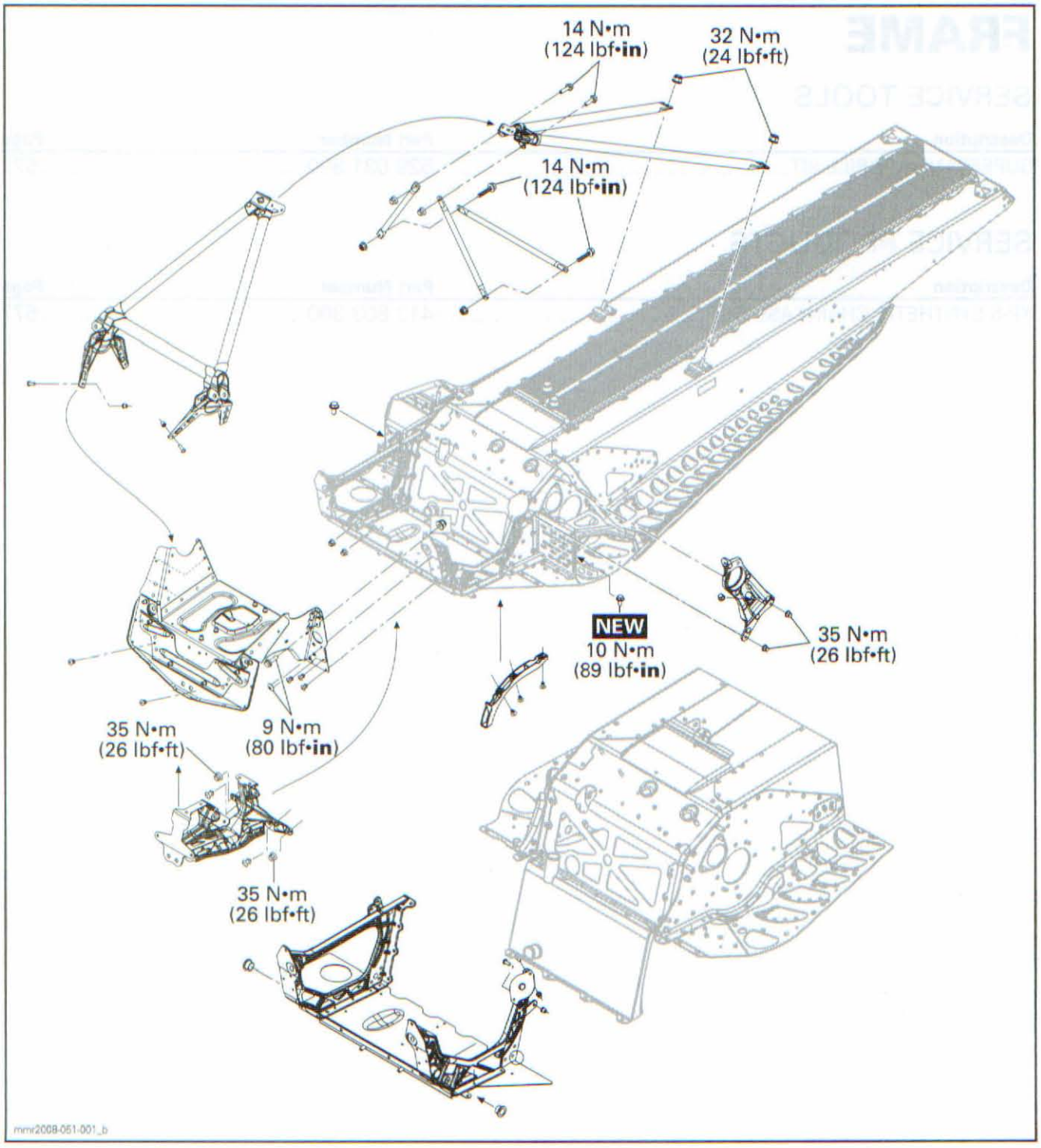

www.midwestmanuals.com

GENERAL

During assembly/installation, use the torque values and the service products as in the exploded views.

Clean threads before applying a threadlocker. Refer to *SELF-LOCKING FASTENERS* and *LOCTITE APPLICATION* at the beginning of this manual for complete procedure.

⚠ WARNING

Torque wrench tightening specifications must be strictly adhered to.
Locking devices (e.g.: locking tabs, elastic stop nuts, cotter pins, etc.) must be replaced with new ones.

Hoses or cables removed or disconnected must be installed and routed at the same place.

NOTICE Locking ties removed during a procedure must be replaced and installed at the same location.

RIVET DRILLING PROCEDURE

For proper drilling instructions and to prevent premature wear, follow the procedure below.

NOTICE When removing rivets, make sure do not enlarge or deform the holes.

Self-Percing Rivet

Recommended Method

1. Using a grinding disk, grind the rivet end.

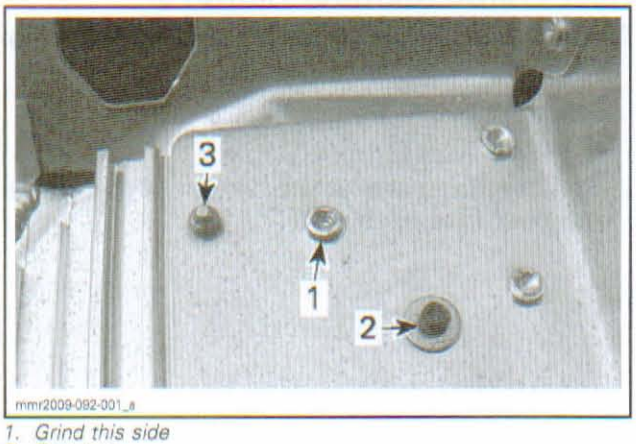

1. *Grind this side*
2. *Pop rivet*
3. *STAVEX rivet*

2. Support the frame around the rivet head with a socket on the opposite side to avoid warpage.

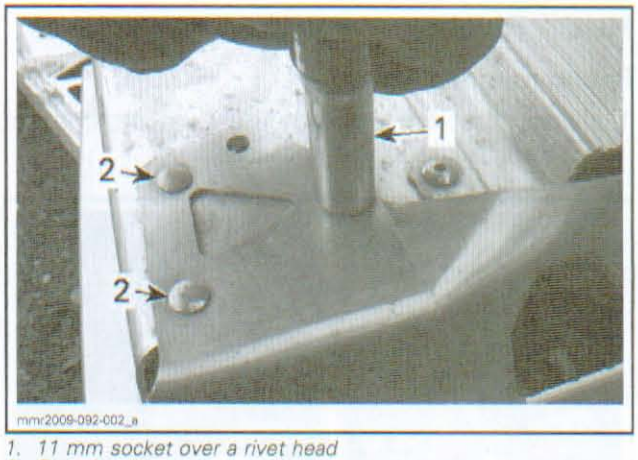

1. *11 mm socket over a rivet head*
2. *Rivet heads*

3. Drive out remaining rivet using a punch.

Alternative Method

1. Use the SUPERTANIUM DRILL BIT (P/N 529 031 800), available in a 5 mm (3/16 in) size and shipped in packs of 2.
2. Partially drill **rivet end — not the rivet head.**
3. Always use a variable speed drill.

NOTICE High speed drilling will cause excessive heat which may destroy the cutting edge of the bit; therefore, avoid using pneumatic drills.

4. Maintain a slow to medium speed at all times when drilling. The proper speed is attained when a constant chip is ejected.

NOTE: To increase bit life, use XP-S SYNTHETIC CHAINCASE OIL (P/N 413 803 300) as a cutting oil.

5. Cut rivet using a chisel.
6. Remove riveted part.
7. Drive out remaining rivet head using a punch.

Pop Rivets

1. Use the SUPERTANIUM DRILL BIT (P/N 529 031 800), available in a 5 mm (3/16 in) size and shipped in packs of 2.
2. Always use a variable speed drill.
3. Always drill **rivet head.**
4. Maintain a slow to medium speed at all times when drilling. The proper speed is attained when a constant chip is ejected.
5. When rivet is located on plastic part, use pliers to avoid rivet turning and heating plastic.
6. Use a small punch to push the rivet end.

www.midwestmanuals.com

HUCK Rivets

Recommended Method

1. Using a cut-off tool, cut the rivet attachment without touching the shoulder.

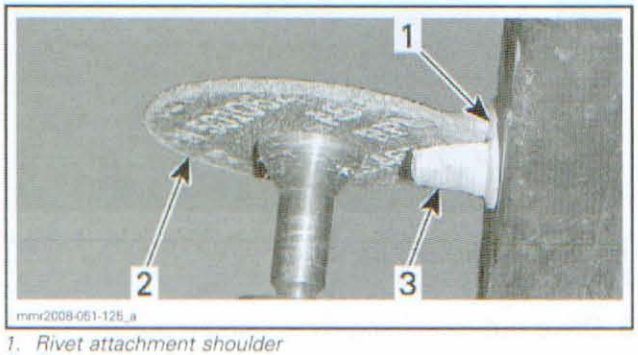

1. Rivet attachment shoulder
2. Cutter wheel
3. Rivet attachment

NOTE: Apply a thin layer of grease on cutter wheel to increase its durability.

2. Break the rivet attachment shoulder using a chisel.
3. Use a small punch to push the rivet stem.

Alternative Method

1. Measure outside diameter of rivet stem and select appropriate drill bit.
2. Drill the **rivet stem — not the rivet head** until rivet attachment is freed.
3. Always use a variable speed drill.
4. Maintain a slow to medium speed at all times when drilling. The proper speed is attained when a constant chip is ejected.

NOTE: When possible, use an angle grinder to grind rivet head or use an air hammer to cut the rivet attachment.

PROCEDURES

FRAME

Frame Cleaning

Clean frame and tunnel with appropriate cleaners and rinse with high pressure hose.

NOTE: For bare aluminum frames use only aluminum cleaner and follow instructions on container.

NOTICE **Never direct high-pressure water jet towards decals. They will peel off.**

Frame Welding

No welds should be done on aluminum frame except if mentioned or required on a BRP Bulletin.

REAR BUMPER

Rear Bumper Removal

1. Underneath tunnel, remove bolts retaining rear bumper to tunnel.

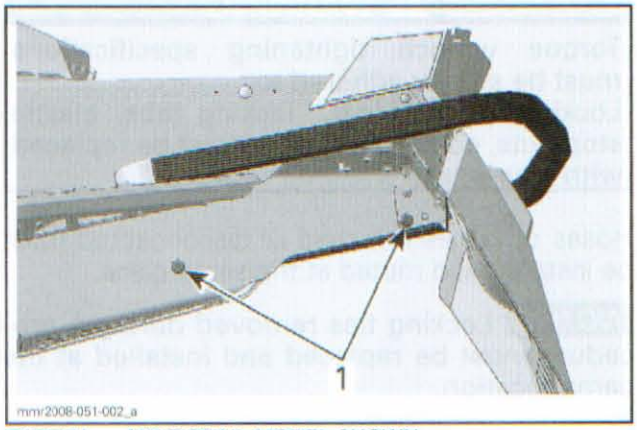

TYPICAL — MX Z TRAIL MODEL SHOWN
1. Rear bumper bolts on right side

2. Pull rear bumper to remove it from vehicle.

Rear Bumper Installation

The installation is the reverse of the removal procedure.

NOTE: Install all bolts before torquing them.

REAR FRAME MEMBER

Rear Frame Member Removal

1. Refer to *BODY* section to remove the following:
   - Seat
   - Gauge support
   - Console.
2. Remove trim panel at the bottom of rear frame member (one each side).

www.midwestmanuals.com

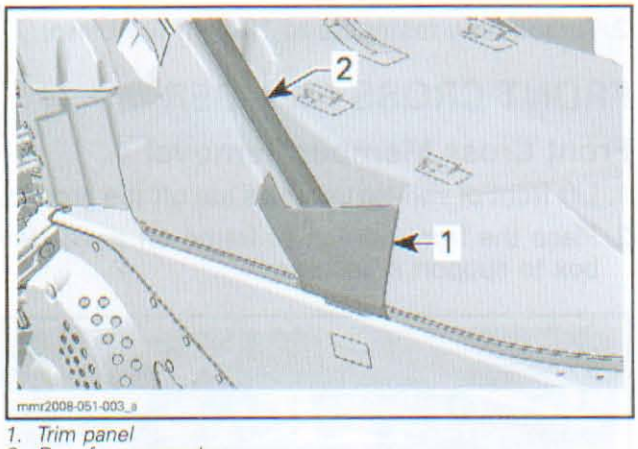

1. *Trim panel*
2. *Rear frame member*

3. Remove nut and shouldered washer securing rear frame member (one each side).

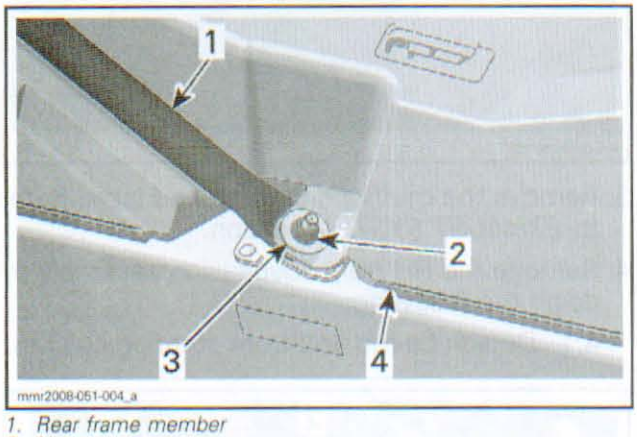

1. *Rear frame member*
2. *Nut to remove*
3. *Shouldered washer*
4. *Fuel tank*

4. Remove screws securing the rear frame member to steering column support and side frame members.

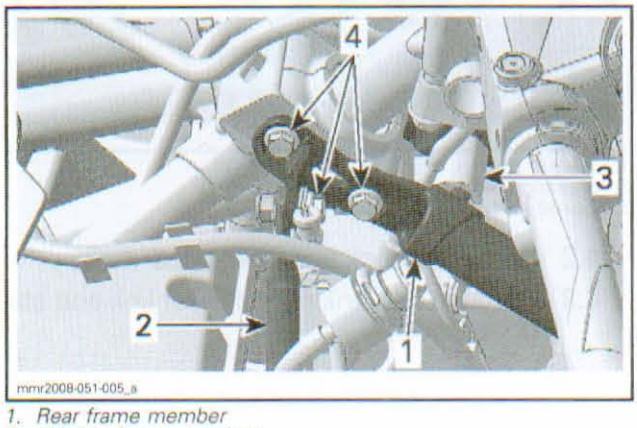

1. *Rear frame member*
2. *LH side frame member*
3. *Steering column support*
4. *Bolts to remove*

5. Remove rear frame member.

Rear Frame Member Installation

The installation is the reverse of the removal procedure.

NOTE: Install all bolts and nuts before tightening them.

FRONT FRAME MEMBER

Front Frame Member Removal

1. Refer to *BODY* section to remove the following:
   - Hood
   - Console
   - Gauge support.
2. Remove the secondary air intake silencer. Refer to *AIR INTAKE SYSTEM* section.
3. Remove the tuned pipe. Refer to *EXHAUST SYSTEM* section.
4. Lift front of vehicle until skis are off the ground.
5. Place the front portion of frame on a wooden box to support it securely.

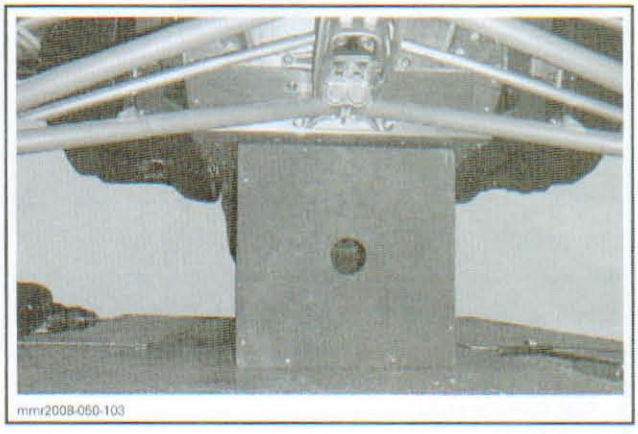

6. Remove front shock absorbers.
7. Drill the rivet retaining the front bottom pan to front frame member (one each side).

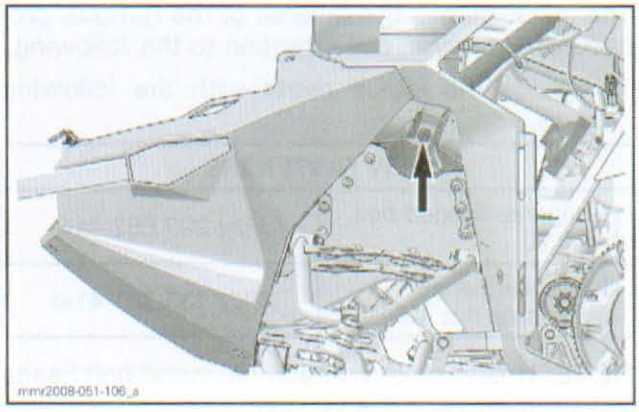

www.midwestmanuals.com

8. Remove HUCK rivets (six each side), see removal procedure at the beginning of this section.

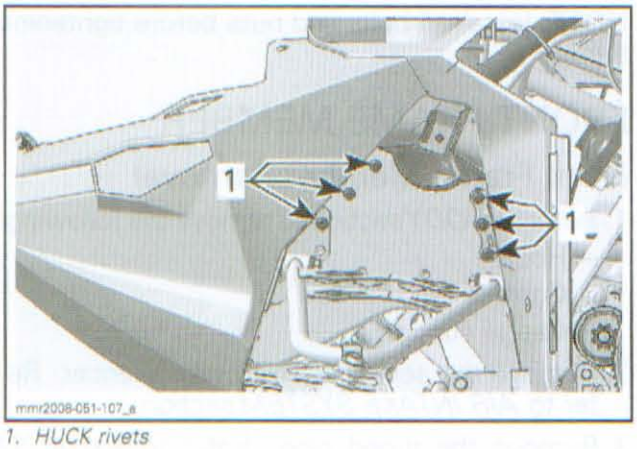

1. HUCK rivets

9. Remove bolts securing front frame member, rear frame member and steering column support.

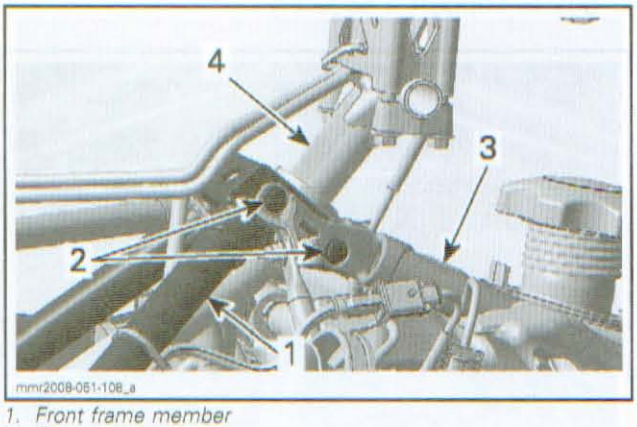

1. Front frame member
2. Bolts to remove
3. Rear frame member
4. Steering column

10. Remove the front frame member.

Front Frame Member Installation

The installation is the reverse of the removal procedure. However, pay attention to the following.

1. Replace the HUCK rivets with the following parts.

NEW FASTENERS	
Hexagonal flanged bolt M6 x 20	(P/N 207 662 044)
Hexagonal flanged elastic stop nut M6	(P/N 233 261 414)

NOTE: Unless stated otherwise, install bolt heads toward outside of the vehicle.

2. Torque new fasteners to 10 N•m (89 lbf•**in**).

FRONT CROSS MEMBER

Front Cross Member Removal

1. Lift front of vehicle until skis are off the ground.
2. Place the front portion of frame on a wooden box to support it securely.

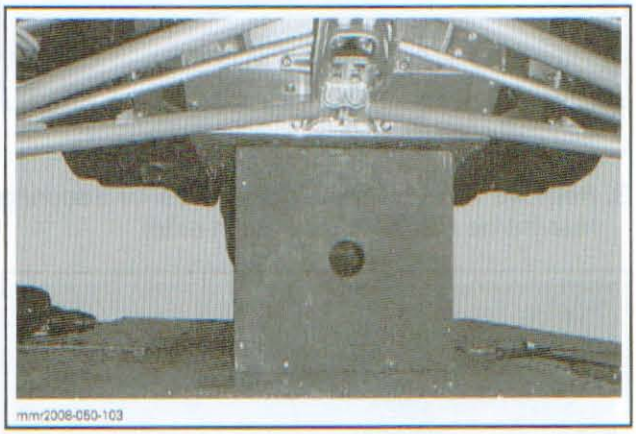

3. Remove the muffler and the tuned pipe. Refer to *EXHAUST SYSTEM* section.
4. Remove the RH front suspension assembly by doing the following:
   4.1 Detach tie-rod end from steering column.

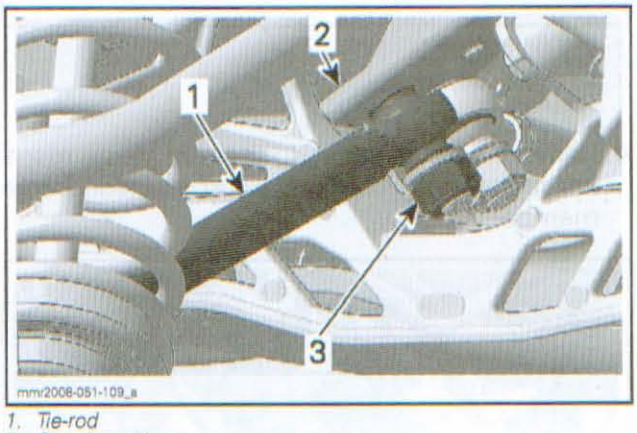

1. Tie-rod
2. Steering column
3. Tie-rod end nut

   4.2 Remove shock absorber upper bolt.
   4.3 Remove bolt linking stabilizer link and stabilizer lever.

www.midwestmanuals.com

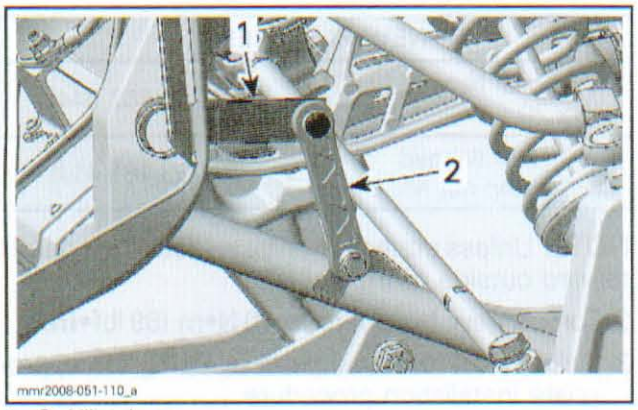

1. Stabilizer lever
2. Stabilizer link

4.4 Remove upper and lower suspension arms bolts. Refer to *FRONT SUSPENSION* section.

4.5 Pull suspension arms to remove the RH front suspension assembly.

NOTE: Repeat same procedure for the LH front suspension.

5. Remove bolts securing the bottom of steering column.

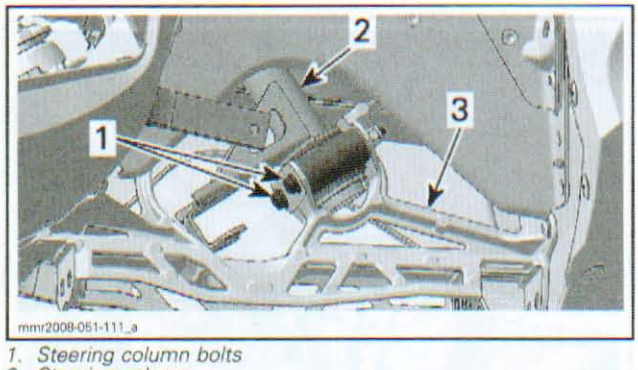

1. Steering column bolts
2. Steering column
3. Lower suspension arm support

6. Remove the front bottom pan. Refer to *BODY* section.

NOTE: Keep the front bumper installed on front bottom pan.

7. Drill the following rivets.

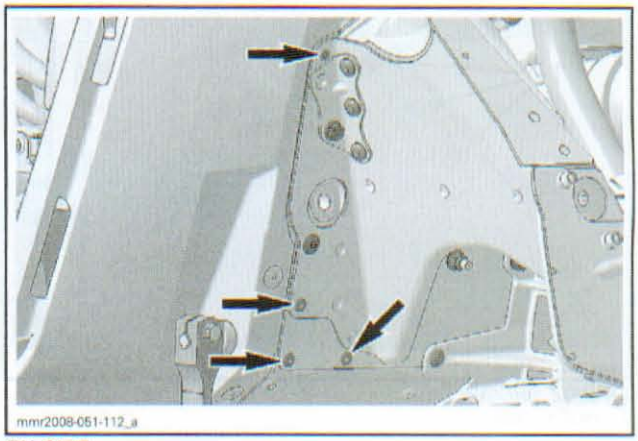

RH SIDE

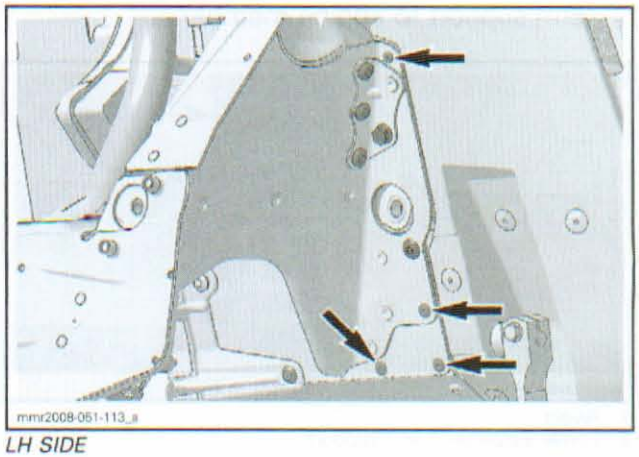

LH SIDE

8. Remove screws securing front cross member to frame (2 each side).

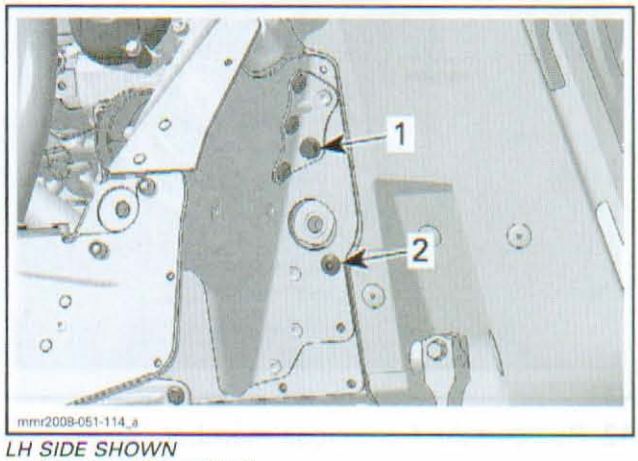

LH SIDE SHOWN
1. Hexagonal flanged bolt
2. Torx screw

9. Remove HUCK rivets (six each side), see removal procedure at the beginning of this section.

www.midwestmanuals.com

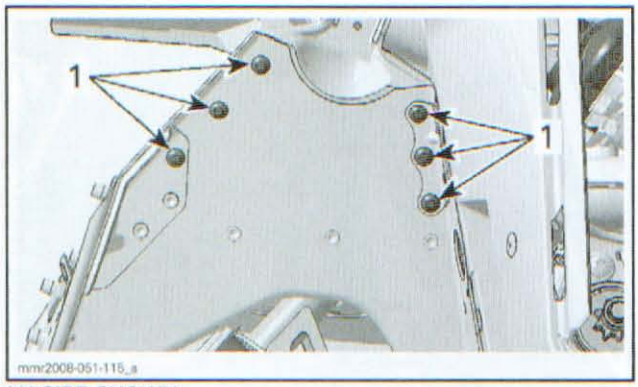

LH SIDE SHOWN
1. *HUCK rivets*

10. Grind rivets securing the lower suspension arm support to engine member.

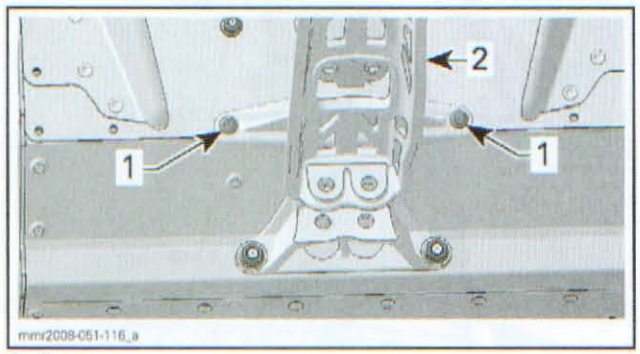

1. *Rivets*
2. *Lower suspension arm support*

11. Remove the following nuts.

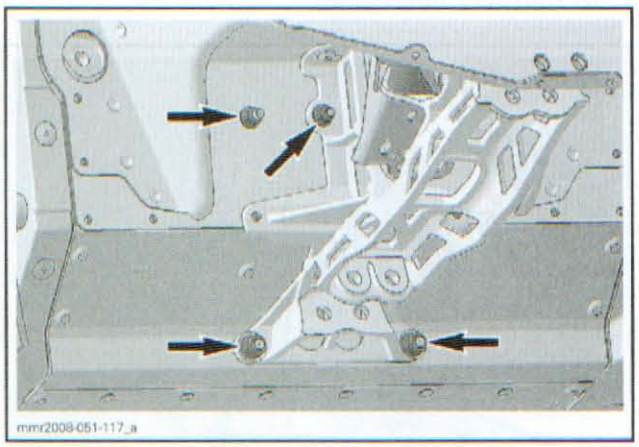

12. Remove the front cross member.

Front Cross Member Installation

The installation is the reverse of the removal procedure. However, pay attention to the following.

1. Replace the HUCK rivets with the following parts.

NEW FASTENERS	
Hexagonal flanged bolt M6 x 20	(P/N 207 662 044)
Hexagonal flanged elastic stop nut M6	(P/N 233 261 414)

NOTE: Unless stated otherwise, install bolt heads toward outside of the vehicle.

2. Torque new fasteners to 10 N•m (89 lbf•**in**).
3. Reinstall all removed parts by using the appropriate installation procedure.

ENGINE MEMBER

Engine Member Removal

1. Remove engine from vehicle. Refer to *ENGINE REMOVAL AND INSTALLATION* section.
2. Remove the *FRONT CROSS MEMBER*, see procedure in this section.
3. Remove stabilizer bar.
4. Remove screws retaining side bottom pan to headlight housing.

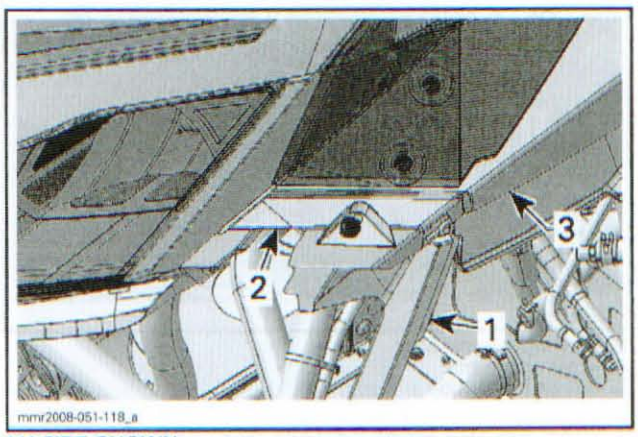

LH SIDE SHOWN
1. *Side bottom pan*
2. *Headlight housing*
3. *Gauge support*

5. Remove both side bottom pans by drilling the following rivets.

www.midwestmanuals.com

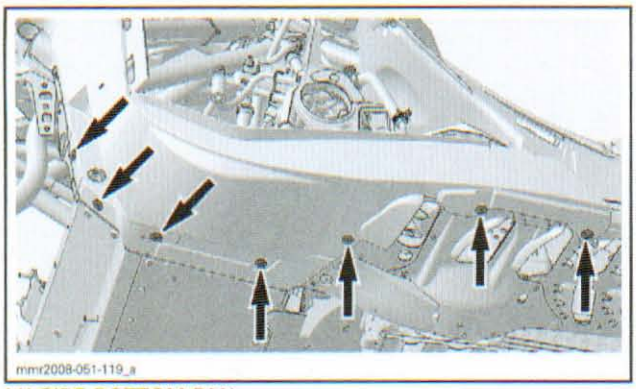

LH SIDE BOTTOM PAN

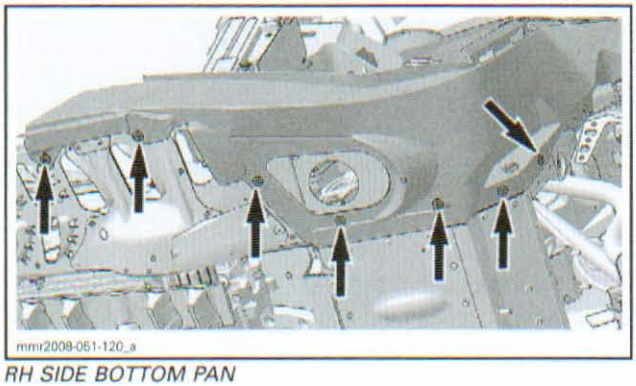

RH SIDE BOTTOM PAN

6. On LH side, remove front and rear engine rubber mounts.

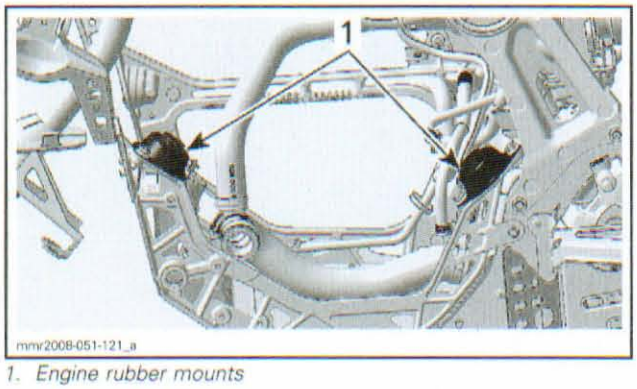

1. Engine rubber mounts

7. Remove HUCK rivets, see removal procedure at the beginning of this section.

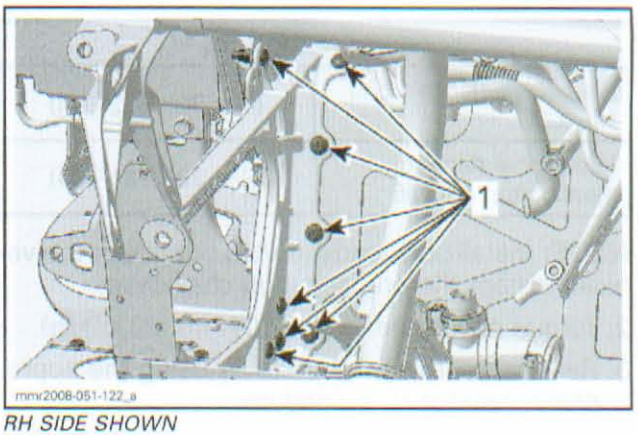

RH SIDE SHOWN
1. HUCK rivets

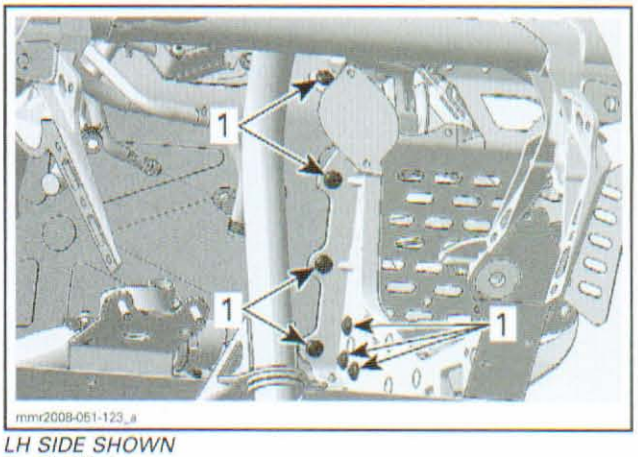

LH SIDE SHOWN
1. HUCK rivets

8. Drill or grind rivets securing engine member to frame.

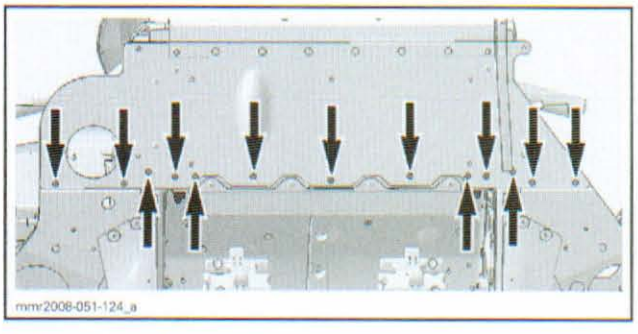

9. Remove the engine member.

Engine Member Installation

The installation is the reverse of the removal procedure. However, pay attention to the following.

1. Replace the HUCK rivets with the following parts.

www.midwestmanuals.com

NEW FASTENERS	
Hexagonal flanged bolt M6 x 20	(P/N 207 662 044)
Hexagonal flanged elastic stop nut M6	(P/N 233 261 414)

NOTE: Install bolt heads toward outside of the vehicle, except the one securing chaincase.

2. Torque new fasteners to 10 N•m (89 lbf•**in**).
3. Reinstall all removed parts by using the appropriate installation procedure.

www.midwestmanuals.com

500SS MODELS

MODEL		GSX 500SS	GTX 500SS	MX Z 500SS	
		Sport	Sport	TNT	Trail
ENGINE					
Engine type		593			
Number of cylinders		2			
Bore		76 mm (2.992 in)			
Stroke		65.8 mm (2.591 in)			
Displacement		597 cm³ (36.43 in³)			
Compression ratio		12.00 ± 0.5			
Maximum power engine speed		8000 ± 100 RPM			
Combustion chamber volume		27.52 ml to 28.37 ml (.93 U.S. oz to .96 U.S. oz)			
RAVE spring	Color	Brown			
	Wire diameter	0.9 mm (.035 in)			
	Minimum free length	48.5 mm (1.909 in)			
Piston ring type		Semi-trapezoidal			
Ring end gap	New	0.4 mm to 0.55 mm (.0157 in to .0217 in)			
	Wear limit	1 mm (.039 in)			
Ring/piston groove clearance	New	0.04 mm to 0.09 mm (.0016 in to .0035 in)			
	Wear limit	0.2 mm (.0079 in)			
Piston/cylinder wall clearance	New	0.094 mm to 0.146 mm (.0037 in to .0057 in)			
	Wear limit	0.18 mm (.0071 in)			
Piston skirt wear	Wear limit	0.15 mm (.006 in)			
Cylinder head warpage	Wear limit	0.5 mm (.02 in)			
Cylinder taper	New (max.)	0.05 mm (.002 in)			
	Wear limit	0.1 mm (.0039 in)			
Cylinder out of round	New (max.)	0.01 mm (.0004 in)			
	Wear limit	0.08 mm (.0031 in)			
Crankshaft end play	New	MIN.: 0.10 mm (.0039 in) MAX.: 0.30 mm (.0118 in)			
Crankshaft deflection	MAX.	MAG: 0.05 mm (.002 in) CENTER: 0.08 mm (.0031 in) PTO: 0.06 mm (.0024 in)			
Connecting rod big end axial play	New	0.36 mm to 0.74 mm (.0142 in to .0291 in)			
	Wear limit	1.2 mm (.0472 in)			
COOLING SYSTEM					
Coolant	Type	Ethyl glycol and distilled water (50%/50%). Use BRP premix coolant (P/N 219 700 362) or coolant specifically formulated for aluminum engines			
	Quantity	4.5 L (1.19 U.S. gal.) GTX: 4.6 L (1.22 U.S. gal.)			
Thermostat opening temperature		37°C (99°F)			
Radiator cap opening pressure		90 kPa (13 PSI)			

www.midwestmanuals.com

MODEL		GSX 500SS	GTX 500SS	MX Z 500SS	
		Sport	Sport	TNT	Trail
LUBRICATION SYSTEM					
Injection oil	Type	XP-S injection oil (P/N 413 802 900)			
	Quantity	3.7 L (1 U.S. gal.)			
FUEL SYSTEM					
Carburetor type		TM40			
Main jet		420			
Needle jet		P-0M			
Pilot jet		17.5			
Jet needle identification		9CEY01 – 58			
Clip position number		3			
Slide cut-away		2.0			
Idle throttle slide height		1.5 mm ± 0.1 mm (.059 in ± .004 in)			
Float adjustment		Not adjustable			
Air or pilot screw adjustment		1.5 ± 1/16 turn			
Idle speed		1600 ± 200 RPM			
Fuel type		Regular unleaded gasoline			
Fuel octane rating	Inside North America ((R+M)/2)	87 or higher			
	Outside North America (RON)	92 or higher			
Fuel tank capacity		40 L (10.6 U.S. gal.)			
Gas/oil ratio		Injection			
ELECTRICAL SYSTEM					
Magneto generator output		360 W @ 6000 RPM			
Ignition type		C.D.I.			
Spark plug	Make and type	NGK BR10ECS			
	Gap	Not adjustable 0.7 mm to 0.8 mm (.028 in to .031 in)			
Ignition timing BTDC		2.49 mm (.098 in) @ 3500 RPM			
Trigger coil		190 to 300 Ω			
Lighting coil		0.1 to 1.0 Ω			
High tension coil	Primary	0.3 to 0.7 Ω			
	Secondary	18 to 26 KΩ (with caps)			
Battery		12 V, 18 A•h (with electric starter)			
Headlamp		2 x 60/55 W (H4)			
Taillight and stoplight		5/21 W			

www.midwestmanuals.com

MODEL		GSX 500SS	GTX 500SS	MX Z 500SS	
		Sport	Sport	TNT	Trail
ELECTRICAL SYSTEM (cont'd)					
Fuse	Main	30 A (with electric starter)			
	ECM	5 A (with electric starter)			
	Headlamp	15 A			
	Accessories/ taillight	20 A			
	Fuel level sensor	0.25 A (if applicable)			
DRIVE SYSTEM					
Chaincase oil	Type	XP-S synthetic chaincase oil (P/N 413 803 300)			
	Quantity	250 ml (8.5 U.S. oz)			
Chain drive ratio		24/45	23/45	25/45 EUR: 23/45	23/45
Chain	Pitch	3/8			
	Type/links qty/plate qty	Silent 13/104			
Drive pulley type		TRA III			
Drive pulley calibration	Clutch engagement	3400 ± 100 RPM		3800 ± 100 RPM	
	Spring color	Blue/Purple		Purple/Purple	
	Spring length	96.6 mm (3.803 in)		106.98 mm (4.212 in)	
	Pin	Solid (P/N 417 004 308)			
	Ramp	412			
	Screw position	3			
Driven pulley type	Type	QRS			
	Spring color	Black			
	Spring preload	0			
	Cam angle	42°			
Pulley distance	Z	Not adjustable 21 mm (.827 in)			
Offset	X	Not adjustable 37.1 mm (1.461 in)			
Drive belt part number		(P/N 417 300 197)			
Drive belt	Width	37.3 mm (1.469 in)			
	Wear limit	34.9 mm (1.374 in)			
Drive belt adjustment	Deflection	32 mm ± 5 mm (1.26 in ± .197 in)			
	Force	11.3 kgf (24.9 lbf)			
Track	Width	381 mm (15 in)			
	Length	3 m (120 in) GTX: 3.5 m (137 in)			
	Profile height	25.4 mm (1 in) TNT (EUR): 31.8 mm (1.25 in)			

www.midwestmanuals.com

MODEL		GSX 500SS	GTX 500SS	MX Z 500SS	
		Sport	Sport	TNT	Trail
DRIVE SYSTEM (cont'd)					
Track adjustment	Deflection	30 mm to 35 mm (1.181 in to 1.378 in)			
	Force	7.3 kgf (16.1 lbf)			
BRAKE SYSTEM					
Brake lining minimum thickness		1 mm (.039 in)			
Brake disk minimum thickness		4.5 mm (.177 in)			
Brake fluid	Type	DOT 4			
	Quantity	65 ml (2.2 U.S. oz)			
SUSPENSION					
FRONT					
Suspension type		REV-XP			
Suspension maximum travel		229 mm (9 in)			
Shock absorber type		Motion control		H.P.G. T/A (aluminum) **EUR:** H.P.G. clicker T/A (aluminum)	Motion control
Spring color		—		Silver/Silver/Green **EUR:** White/Silver/Green	—
Sway bar type		Link			
REAR					
Suspension type		SC-5			
Suspension maximum travel		381 mm (15 in)			
Shock absorber type	Center	Motion control		H.P.G. T/A (aluminum)	Motion control
	Rear	Motion control	H.P.G. VR	H.P.G. T/A (aluminum) **EUR:** H.P.G. racing clicker (aluminum)	Motion control
Spring color	Center	Gold/Red/Red			
Stroke limiter standard position		3			
STEERING SYSTEM					
Ski type		Pilot 5.7	Pilot SL	Pilot 5.7	Pilot 5.7
Toe-out		5 mm (.197 in)			
Camber		0°			
WEIGHT AND DIMENSIONS					
Mass (dry)		198 kg (437 lb)	211 kg (465 lb)	181 kg (399 lb)	188 kg (414 lb)
Length		289 cm (113.8 in) **GTX:** 311 cm (122.4 in)			
Width		122 cm (48 in)			
Height		126 cm (49.6 in)	120 cm (47.2 in)	113 cm (44.5 in)	120 cm (47.2 in)
Ski stance (carbide to carbide)		119.5 cm (47.05 in)			

www.midwestmanuals.com

MODEL	GSX 500SS	GTX 500SS	MX Z 500SS	
	Sport	Sport	TNT	Trail
MATERIAL				
Frame	Aluminum			
Bottom pan and side panels	Polypropylene			
Hood	Surlyn			

www.midwestmanuals.com

www.midwestmanuals.com

600 MODELS

MODEL		SUMMIT Everest 600
ENGINE		
Engine type		593
Number of cylinders		2
Bore		76 mm (2.992 in)
Stroke		65.8 mm (2.591 in)
Displacement		597 cm³ (36.43 in³)
Compression ratio		12.00 ± 0.5
Maximum power engine speed		8000 ± 100 RPM
Combustion chamber volume		27.52 ml to 28.37 ml (.93 U.S. oz to .96 U.S. oz)
RAVE spring	Color	Brown
	Wire diameter	0.9 mm (.035 in)
	Minimum free length	48.5 mm (1.909 in)
Piston ring type		Semi-trapezoidal
Ring end gap	New	0.4 mm to 0.55 mm (.0157 in to .0217 in)
	Wear limit	1 mm (.039 in)
Ring/piston groove clearance	New	0.04 mm to 0.09 mm (.0016 in to .0035 in)
	Wear limit	0.2 mm (.0079 in)
Piston/cylinder wall clearance	New	0.094 mm to 0.146 mm (.0037 in to .0057 in)
	Wear limit	0.18 mm (.0071 in)
Piston skirt wear	Wear limit	0.15 mm (.006 in)
Cylinder head warpage	Wear limit	0.5 mm (.02 in)
Cylinder taper	New (max.)	0.05 mm (.002 in)
	Wear limit	0.1 mm (.0039 in)
Cylinder out of round	New (max.)	0.01 mm (.0004 in)
	Wear limit	0.08 mm (.0031 in)
Crankshaft end play	New	MIN.: 0.10 mm (.0039 in) MAX.: 0.30 mm (.0118 in)
Crankshaft deflection	MAX.	MAG: 0.05 mm (.002 in) CENTER: 0.08 mm (.0031 in) PTO: 0.06 mm (.0024 in)
Crankshaft end play	New	MIN.: 0.10 mm (.0039 in) MAX.: 0.30 mm (.0118 in)
Crankshaft deflection	MAX.	MAG: 0.05 mm (.002 in) CENTER: 0.08 mm (.0031 in) PTO: 0.06 mm (.0024 in)
Crankshaft end play	New	MIN.: 0.10 mm (.0039 in) MAX.: 0.30 mm (.0118 in)
Crankshaft deflection	MAX.	MAG: 0.05 mm (.002 in) CENTER: 0.08 mm (.0031 in) PTO: 0.06 mm (.0024 in)
Connecting rod big end axial play	New	0.36 mm to 0.74 mm (.0142 in to .0291 in)
	Wear limit	1.2 mm (.0472 in)

www.midwestmanuals.com

MODEL		SUMMIT Everest 600
COOLING SYSTEM		
Coolant	Type	Ethyl glycol and distilled water (50%/50%). Use BRP premix coolant (P/N 219 700 362) or coolant specifically formulated for aluminum engines
	Quantity	4.7 L (1.24 U.S. gal.)
Thermostat opening temperature		37°C (99°F)
Radiator cap opening pressure		90 kPa (13 PSI)
LUBRICATION SYSTEM		
Injection oil	Type	XP-S synthetic blend 2-stroke oil (P/N 293 600 100)
	Quantity	3.7 L (1 U.S. gal.)
FUEL SYSTEM		
Carburetor type		TM40
Main jet		420
Needle jet		P-0M
Pilot jet		17.5
Jet needle identification		9CEY01 – 58
Clip position number		3
Slide cut-away		2.0
Idle throttle slide height		1.5 mm ± 0.1 mm (.059 in ± .004 in)
Float adjustment		Not adjustable
Air or pilot screw adjustment		1.5 ± 1/16 turn
Idle speed		1600 ± 200 RPM
Fuel type		Regular unleaded gasoline
Fuel octane rating	Inside North America ((R+M)/2)	87 or higher
	Outside North America (RON)	92 or higher
Fuel tank capacity		40 L (10.6 U.S. gal.)
Gas/oil ratio		Injection
ELECTRICAL SYSTEM		
Magneto generator output		360 W @ 6000 RPM
Ignition type		C.D.I.
Spark plug	Make and type	NGK BR10ECS
	Gap	Not adjustable 0.7 mm to 0.8 mm (.028 in to .031 in)
Ignition timing BTDC		2.49 mm (.098 in) @ 3500 RPM
Trigger coil		190 to 300 Ω
Lighting coil		0.1 to 1.0 Ω
High tension coil	Primary	0.3 to 0.7 Ω
	Secondary	18 to 26 KΩ (with caps)
Battery		12 V, 18 A•h (with electric starter)
Headlamp		2 x 60/55 W (H4)
Taillight and stoplight		5/21 W

www.midwestmanuals.com

MODEL		SUMMIT
		Everest 600
ELECTRICAL SYSTEM (cont'd)		
Fuse	Main	30 A (with electric starter)
	ECM	5 A (with electric starter)
	Headlamp	15 A
	Accessories/ Taillight	20 A
	Fuel level sensor	0.25 A (if applicable)
DRIVE SYSTEM		
Chaincase oil	Type	XP-S synthetic chaincase oil (P/N 413 803 300)
	Quantity	250 ml (8.5 U.S. oz)
Chain drive ratio		19/49
Chain	Pitch	3/8
	Type/links qty/plate qty	Silent 13/104
Drive pulley type		TRA III
Drive pulley calibration	Clutch engagement	4100 ± 100 RPM
	Spring color	Green/Pink
	Spring length	118 mm (4.6 in)
	Pin	1 x 417 000 477 + 1 x 206 262 099
	Ramp	417
	Screw position	3
Driven pulley type	Type	QRS
	Spring color	Black
	Spring preload	0
	Cam angle	43-47°
Pulley distance	Z	Not adjustable 21 mm (.827 in)
Offset	X	Not adjustable 37.1 mm (1.461 in)
Drive belt part number		(P/N 417 300 197)
Drive belt	Width	37.3 mm (1.469 in)
	Wear limit	34.9 mm (1.374 in)
Drive belt adjustment	Deflection	32 mm ± 5 mm (1.26 in ± .197 in)
	Force	11.3 kgf (24.9 lbf)
Track	Width	381 mm (15 in)
	Length	3.7 m (146.1 in)
	Profile height	50.8 mm (2 in)
Track adjustment	Deflection	30 mm to 35 mm (1.181 in to 1.378 in)
	Force	7.3 kgf (16.1 lbf)

www.midwestmanuals.com

MODEL		SUMMIT Everest 600
BRAKE SYSTEM		
Brake lining minimum thickness		1 mm (.039 in)
Brake disk minimum thickness		4.5 mm (.177 in)
Brake fluid	Type	DOT 4
	Quantity	65 ml (2.2 U.S. oz)
SUSPENSION		
FRONT		
Suspension type		REV-XP
Suspension maximum travel		229 mm (9 in)
Shock absorber type		Motion control
Spring color		—
Sway bar type		Link
REAR		
Suspension type		SC-5 M
Suspension maximum travel		356 mm (14 in)
Shock absorber type	Center	Motion control
	Rear	Motion control
Spring color	Center	**Short:** Silver/Red/Red **Long:** Gold/Blue/White
Stroke limiter standard position		2
STEERING SYSTEM		
Ski type		Pilot 6.9
Toe-out		5 mm (.197 in)
Camber		0°
VEHICLE INFORMATIONS		
Mass (dry)		193 kg (425 lb)
Length		320 cm (126 in)
Width		122 cm (48 in)
Height		126 cm (49.6 in)
Ski stance (carbide to carbide)		114 cm to 118 cm (44.9 in to 46.5 in)
MATERIAL		
Frame		Aluminum
Bottom pan and side panels		Polypropylene
Hood		Surlyn

www.midwestmanuals.com

600 HO E-TEC MODELS

MODEL			GSX 600 HO E-TEC Limited	GTX 600 HO E-TEC LE
ENGINE				
Engine type			593	
Number of cylinder			2	
Bore			72 mm (2.835 in)	
Stroke			73 mm (2.874 in)	
Displacement			594.4 cm³ (36.27 in³)	
Compression ratio			12.25 ± 0.5	
Maximum power engine speed			8100 ± 100 RPM	
Combustion chamber volume			25.30 ml to 27.60 ml (.86 U.S. oz to .93 U.S. oz)	
3D RAVE spring	Compression spring	Color	Red	
		Wire diameter	0.8 mm (.031 in)	
		Minimum free length	45 mm (1.772 in)	
	Valve springs	Color	Red	
		Wire diameter	0.7 mm (.0276 in)	
		Minimum free length	35 mm (1.378 in)	
Piston ring type			Semi-trapezoidal	
Ring end gap		New	0.4 mm to 0.55 mm (.016 in to .022 in)	
		Wear limit	1 mm (.039 in)	
Ring/piston groove clearance		New	0.05 mm to 0.1 mm (.002 in to .0039 in)	
		Wear limit	0.2 mm (.0079 in)	
Piston/cylinder wall clearance		New	0.13 mm ± 0.022 mm (.0051 in ± .0009 in)	
		Wear limit	0.2 mm (.0079 in)	
Piston skirt wear		Wear limit	0.15 mm (.006 in)	
Cylinder head warpage		Wear limit	0.5 mm (.0197 in)	
Cylinder taper		New (max.)	0.05 mm (.002 in)	
		Wear limit	0.1 mm (.0039 in)	
Cylinder out of round		New (max.)	0.012 mm (.0005 in)	
		Wear limit	0.08 mm (.0031 in)	
Crankshaft end play		New	MIN.: 0.10 mm (.0039 in) MAX.: 0.30 mm (.0118 in)	
Crankshaft deflection		MAX.	MAG: 0.05 mm (.002 in) CENTER: 0.08 mm (.0031 in) PTO: 0.06 mm (.0024 in)	
Connecting rod big end axial play		New	0.28 mm to 0.68 mm (.011 in to .0268 in)	
		Wear limit	1.2 mm (.0472 in)	

www.midwestmanuals.com

MODEL			GSX 600 HO E-TEC Limited	GTX 600 HO E-TEC LE
COOLING SYSTEM				
Coolant		Type	Ethyl glycol and distilled water (50%/50%). Use BRP premix coolant (P/N 219 700 362) or coolant specifically formulated for aluminum engines	
		Quantity	4.5 L (1.19 U.S. gal.)	5.8 L (1.53 U.S. gal.)
Thermostat opening temperature			37°C (99°F)	
Radiator cap opening pressure			90 kPa (13 PSI)	
LUBRICATION SYSTEM				
Oil injection pump type			Electronic oil injection pump	
Injection oil		Type	XP-S synthetic blend 2-stroke oil (P/N 293 600 100)	
		Quantity	3.7 L (125.1 U.S. oz)	
FUEL SYSTEM				
Fuel delivery			E-TEC direct injection	
Throttle body			Dell'Orto 46 mm	
Fuel pump			In-tank electrical fuel pump	
Idle speed (not adjustable)			1200 ± 200 RPM	
Fuel	Type		Premium unleaded gasoline	
	Octane rating	Inside North America ((R+M)/2)	Recommended: 91, Accepted: 87	
		Outside North America (RON)	Recommended: 95, Accepted: 92	
Fuel tank capacity			40 L (10.6 U.S. gal.)	
ELECTRICAL SYSTEM				
Lightning system output			12 V/360 W 55 V/1100 W	
Ignition type			Inductive	
Spark plug		Make and type	NGK PZFR6F (engine and spark plug threads are indexed)	
		Gap	Not adjustable 0.7 mm to 0.8 mm (.028 in to .031 in)	
Ignition timing BTDC			28° @ 3500 ± 500 RPM	
			5.39 mm (.212 in)	
Crankshaft position sensor (CPS)			190 to 290 Ω	
Stator			below 1 Ω	
Headlamp			2 x 60/55 W (H4)	
Taillight and stoplight			5/21 W	
Fuses		RER	5 A	
		Fuel level sensor	0.25 A	

www.midwestmanuals.com

MODEL		GSX 600 HO E-TEC	GTX 600 HO E-TEC
		Limited	LE
DRIVE SYSTEM			
Chaincase oil	Type	XP-S synthetic chaincase oil (P/N 413 803 300)	
	Quantity	250 ml (8.5 U.S. oz)	
Chain drive ratio		25/45	23/45
Chain	Pitch	3/8	
	Type/links qty/plate qty	Silent 104/13	
Drive pulley type		TRA III	
Drive pulley calibration	Clutch engagement	3400 ± 100 RPM	
	Spring color	Blue/Blue	
	Spring length	99.8 mm (4.512 in)	
	Pin	Solid (P/N 417 004 308)	
	Ramp	412	414
	Screw position	3	
Driven pulley type	Type	QRS	
	Spring color	Green	Black
	Spring preload	0	
	Cam angle	48°	42°
Pulley distance	Z	21 mm (.827 in) (not adjustable)	
Offset	X	37.1 mm (1.461 in) (not adjustable)	
Drive belt part number		(P/N 417 300 383)	
Drive belt	Width	38.3 mm (1.508 in)	
	Wear limit	35.9 mm (1.413 in)	
Drive belt adjustment	Deflection	32 mm ± 5 mm (1.26 in ± .197 in)	
	Force	11.3 kgf (24.9 lbf)	
Track	Width	381 mm (15 in)	
	Length	3 m (120.1 in)	3.5 m (137 in)
	Profile height	25.4 mm (1 in)	
Track adjustment	Deflection	30 mm to 35 mm (1.181 in to 1.378 in)	
	Force	7.3 kgf (16.1 lbf)	
BRAKE SYSTEM			
Brake lining minimum thickness		1 mm (.039 in)	
Brake disk minimum thickness		4.5 mm (.177 in)	
Brake fluid	Type	DOT 4	
	Quantity	60 ml (2.03 U.S. oz)	

www.midwestmanuals.com

MODEL		GSX 600 HO E-TEC Limited	GTX 600 HO E-TEC LE
SUSPENSION			
FRONT			
Suspension type		REV-XP	
Suspension maximum travel		229 mm (9 in)	
Shock absorber type		H.P.G.	
Spring color		White/Black/Gold	White/Gold/Red
Stabilizer bar type		Link	
REAR			
Suspension type		SC-5	
Suspension maximum travel		381 mm (15 in)	331 mm (13 in)
Shock absorber type	Center	H.P.G.	
	Rear	H.P.G.VR	
Spring color	Center	Gold/Red/Red	
Stroke limiter standard position		3	
STEERING SYSTEM			
Ski type		Pilot 5.7	Pilot SL
Toe-out		5 mm (.197 in)	
Camber		0°	
WEIGHT AND DIMENSIONS			
Mass (dry)		204 kg (450 lb)	242 kg (534 lb)
Length		289 cm (113.8 in)	323 cm (127.2 in)
Width		122 cm (48 in)	
Height		100 cm (39.4 in)	133 cm (52.4 in)
Ski stance (carbide to carbide)		119.5 cm (47 in)	
MATERIAL			
Frame		Aluminum	
Bottom pans, gauge support and side panels		Polypropylene	
Hood and console		Surlyn	

www.midwestmanuals.com

MODEL			MX Z	
			50th	Adrenaline
ENGINE				
Engine type			593	
Number of cylinder			2	
Bore			72 mm (2.835 in)	
Stroke			73 mm (2.874 in)	
Displacement			594.4 cm³ (36.27 in³)	
Compression ratio			12.25 ± 0.5	
Maximum power engine speed			8100 ± 100 RPM	
Combustion chamber volume			25.30 ml to 27.60 ml (.86 U.S. oz to .93 U.S. oz)	
3D RAVE spring	Compression spring	Color	Red	
		Wire diameter	0.8 mm (.031 in)	
		Minimum free length	45 mm (1.772 in)	
	Valve springs	Color	Red	
		Wire diameter	0.7 mm (.0276 in)	
		Minimum free length	35 mm (1.378 in)	
Piston ring type			Semi-trapezoidal	
Ring end gap		New	0.4 mm to 0.55 mm (.016 in to .022 in)	
		Wear limit	1 mm (.039 in)	
Ring/piston groove clearance		New	0.05 mm to 0.1 mm (.002 in to .0039 in)	
		Wear limit	0.2 mm (.0079 in)	
Piston/cylinder wall clearance		New	0.13 mm ± 0.022 mm (.0051 in ± .0009 in)	
		Wear limit	0.2 mm (.0079 in)	
Piston skirt wear		Wear limit	0.15 mm (.006 in)	
Cylinder head warpage		Wear limit	0.5 mm (.0197 in)	
Cylinder taper		New (max.)	0.05 mm (.002 in)	
		Wear limit	0.1 mm (.0039 in)	
Cylinder out of round		New (max.)	0.012 mm (.0005 in)	
		Wear limit	0.08 mm (.0031 in)	
Crankshaft end play		New	MIN.: 0.10 mm (.0039 in) MAX.: 0.30 mm (.0118 in)	
Crankshaft deflection		MAX.	MAG: 0.05 mm (.002 in) CENTER: 0.08 mm (.0031 in) PTO: 0.06 mm (.0024 in)	
Connecting rod big end axial play		New	0.28 mm to 0.68 mm (.011 in to .0268 in)	
		Wear limit	1.2 mm (.0472 in)	

www.midwestmanuals.com

MODEL			MX Z	
			50th	Adrenaline
COOLING SYSTEM				
Coolant		Type	Ethyl glycol and distilled water (50%/50%). Use BRP premix coolant (P/N 219 700 362) or coolant specifically formulated for aluminum engines	
		Quantity	4.5 L (1.19 U.S. gal.)	
Thermostat opening temperature			37°C (99°F)	
Radiator cap opening pressure			90 kPa (13 PSI)	
LUBRICATION SYSTEM				
Oil injection pump type			Electronic oil injection pump	
Injection oil		Type	XP-S synthetic blend 2-stroke oil (P/N 293 600 100)	
		Quantity	3.7 L (125.1 U.S. oz)	
FUEL SYSTEM				
Fuel delivery			E-TEC direct injection	
Throttle body			Dell'Orto 46 mm	
Fuel pump			In-tank electrical fuel pump	
Idle speed (not adjustable)			1200 ± 200 RPM	
Fuel	Type		Premium unleaded gasoline	
	Octane rating	Inside North America ((R+M)/2)	Recommended: 91, accepted: 87	
		Outside North America (RON)	Recommended: 95, accepted: 92	
Fuel tank capacity			40 L (10.6 U.S. gal.)	
ELECTRICAL SYSTEM				
Lightning system output			12 V/360 W 55 V/1100 W	
Ignition type			Inductive	
Spark plug		Make and type	NGK PZFR6F (engine and spark plug threads are indexed)	
		Gap	Not adjustable 0.7 mm to 0.8 mm (.028 in to .031 in)	
Ignition timing BTDC			28° @ 3500 ± 500 RPM	
			5.39 mm (.212 in)	
Crankshaft position sensor (CPS)			190 to 290 Ω	
Stator			below 1 Ω	
Headlamp			2 x 60/55 W (H4)	
Taillight and stoplight			5/21 W	
Fuses		RER	5 A	
		Fuel level sensor	0.25 A	

www.midwestmanuals.com

MODEL		MX Z	
		50th	Adrenaline
DRIVE SYSTEM			
Chaincase oil	Type	XP-S synthetic chaincase oil (P/N 413 803 300)	
	Quantity	250 ml (8.5 U.S. oz)	
Chain drive ratio		25/45	
Chain	Pitch	3/8	
	Type/links qty/plate qty	Silent 104/13	
Drive pulley type		TRA III	
Drive pulley calibration	Clutch engagement	3400 ± 100 RPM	
	Spring color	Blue/Blue	
	Spring length	99.8 mm (4.512 in)	
	Pin	Solid (P/N 417 004 308)	
	Ramp	412	
	Screw position	3	
Driven pulley type	Type	ORS	
	Spring color	Green	
	Spring preload	0	
	Cam angle	48°	
Pulley distance	Z	21 mm (.827 in) (not adjustable)	
Offset	X	37.1 mm (1.461 in) (not adjustable)	
Drive belt part number		(P/N 417 300 383)	
Drive belt	Width	38.3 mm (1.508 in)	
	Wear limit	35.9 mm (1.413 in)	
Drive belt adjustment	Deflection	32 mm ± 5 mm (1.26 in ± .197 in)	
	Force	11.3 kgf (24.9 lbf)	
Track	Width	381 mm (15 in)	
	Length	3 m (120.1 in)	
	Profile height	31.8 mm (1.25 in)	25.4 mm (1 in)
Track adjustment	Deflection	30 mm to 35 mm (1.181 in to 1.378 in)	
	Force	7.3 kgf (16.1 lbf)	
BRAKE SYSTEM			
Brake lining minimum thickness		1 mm (.039 in)	
Brake disk minimum thickness		4.5 mm (.177 in)	
Brake fluid	Type	DOT 4	
	Quantity	65 ml (2.2 U.S. oz)	

www.midwestmanuals.com

MODEL		MX Z	
		50th	Adrenaline
SUSPENSION			
FRONT			
Suspension type		REV-XP	
Suspension maximum travel		229 mm (9 in)	
Shock absorber type		H.P.G. T/A (aluminum)	H.P.G.
Spring color		Silver/Silver/Green EUR: White/Silver/Green	Silver/Gold/Green
Stabilizer bar type		Link	
REAR			
Suspension type		SC-5	
Suspension maximum travel		381 mm (15 in)	
Shock absorber type		H.P.G. T/A (aluminum)	H.P.G.
		H.P.G. T/A	H.P.G.
Spring color	Center	Gold/Red/Red	
Stroke limiter standard position		3	
STEERING SYSTEM			
Ski type		Pilot 5.7	
Toe-out		5 mm (.197 in)	
Camber		0°	
WEIGHT AND DIMENSIONS			
Mass (dry)		201 kg (443 lb)	193 kg (425 lb)
Length		289 cm (114 in)	
Width		122 cm (48 in)	
Height		120.3 cm (47.4 in)	
Ski stance (carbide to carbide)		120 cm (47 in)	
MATERIAL			
Frame		Aluminum	
Bottom pans, gauge support and side panels		Polypropylene	
Hood and console		Surlyn	

www.midwestmanuals.com

MODEL			MX Z TNT	MX Z X
ENGINE				
Engine type			593	
Number of cylinder			2	
Bore			72 mm (2.835 in)	
Stroke			73 mm (2.874 in)	
Displacement			594.4 cm³ (36.27 in³)	
Compression ratio			12.25 ± 0.5	
Maximum power engine speed			8100 ± 100 RPM	
Combustion chamber volume			25.30 ml to 27.60 ml (.86 U.S. oz to .93 U.S. oz)	
3D RAVE spring	Compression spring	Color	Red	
		Wire diameter	0.8 mm (.031 in)	
		Minimum free length	45 mm (1.772 in)	
	Valve springs	Color	Red	
		Wire diameter	0.7 mm (.0276 in)	
		Minimum free length	35 mm (1.378 in)	
Piston ring type			Semi-trapezoidal	
Ring end gap		New	0.4 mm to 0.55 mm (.016 in to .022 in)	
		Wear limit	1 mm (.039 in)	
Ring/piston groove clearance		New	0.05 mm to 0.1 mm (.002 in to .0039 in)	
		Wear limit	0.2 mm (.0079 in)	
Piston/cylinder wall clearance		New	0.13 mm ± 0.022 mm (.0051 in ± .0009 in)	
		Wear limit	0.2 mm (.0079 in)	
Piston skirt wear		Wear limit	0.15 mm (.006 in)	
Cylinder head warpage		Wear limit	0.5 mm (.0197 in)	
Cylinder taper		New (max.)	0.05 mm (.002 in)	
		Wear limit	0.1 mm (.0039 in)	
Cylinder out of round		New (max.)	0.012 mm (.0005 in)	
		Wear limit	0.08 mm (.0031 in)	
Crankshaft end play		New	MIN.: 0.10 mm (.0039 in) MAX.: 0.30 mm (.0118 in)	
Crankshaft deflection		MAX.	MAG: 0.05 mm (.002 in) CENTER: 0.08 mm (.0031 in) PTO: 0.06 mm (.0024 in)	
Connecting rod big end axial play		New	0.28 mm to 0.68 mm (.011 in to .0268 in)	
		Wear limit	1.2 mm (.0472 in)	
COOLING SYSTEM				
Coolant		Type	Ethyl glycol and distilled water (50%/50%). Use BRP premix coolant (P/N 219 700 362) or coolant specifically formulated for aluminum engines	
		Quantity	4.5 L (1.19 U.S. gal.)	
Thermostat opening temperature			37°C (99°F)	
Radiator cap opening pressure			90 kPa (13 PSI)	

www.midwestmanuals.com

MODEL			MX Z	
			TNT	X
LUBRICATION SYSTEM				
Oil injection pump type			Electronic oil injection pump	
Injection oil		Type	XP-S synthetic blend 2-stroke oil (P/N 293 600 100)	
		Quantity	3.7 L (125.1 U.S. oz)	
FUEL SYSTEM				
Fuel delivery			E-TEC direct injection	
Throttle body			Dell'Orto 46 mm	
Fuel pump			In-tank electrical fuel pump	
Idle speed (not adjustable)			1200 ± 200 RPM	
Fuel	Type		Premium unleaded gasoline	
	Octane rating	Inside North America ((R+M)/2)	Recommended: 91, accepted: 87	
		Outside North America (RON)	Recommended: 95, accepted: 92	
Fuel tank capacity			40 L (10.6 U.S. gal.)	
ELECTRICAL SYSTEM				
Lightning system output			12 V/360 W 55 V/1100 W	
Ignition type			Inductive	
Spark plug		Make and type	NGK PZFR6F (engine and spark plug threads are indexed)	
		Gap	Not adjustable 0.7 mm to 0.8 mm (.028 in to .031 in)	
Ignition timing BTDC			28° @ 3500 ± 500 RPM	
			5.39 mm (.212 in)	
Crankshaft position sensor (CPS)			190 to 290 Ω	
Stator			below 1 Ω	
Headlamp			2 x 60/55 W (H4)	
Taillight and stoplight			5/21 W	
Fuses		RER	5 A	
		Fuel level sensor	0.25 A	
DRIVE SYSTEM				
Chaincase oil		Type	XP-S synthetic chaincase oil (P/N 413 803 300)	
		Quantity	250 ml (8.5 U.S. oz)	
Chain drive ratio			25/45	
Chain		Pitch	3/8	
		Type/links qty/plate qty	Silent 104/13	
Drive pulley type			TRA III	

www.midwestmanuals.com

MODEL		MX Z	
		TNT	X
DRIVE SYSTEM (cont'd)			
Drive pulley calibration	Clutch engagement	3400 ± 100 RPM	
	Spring color	Blue/Blue	
	Spring length	99.8 mm (4.512 in)	
	Pin	Solid (P/N 417 004 308)	
	Ramp	412	
	Screw position	3	
Driven pulley type	Type	QRS	
	Spring color	Green	
	Spring preload	0	
	Cam angle	48°	
Pulley distance	Z	21 mm (.827 in) (not adjustable)	
Offset	X	37.1 mm (1.461 in) (not adjustable)	
Drive belt part number		(P/N 417 300 383)	
Drive belt	Width	38.3 mm (1.508 in)	
	Wear limit	35.9 mm (1.413 in)	
Drive belt adjustment	Deflection	32 mm ± 5 mm (1.26 in ± .197 in)	
	Force	11.3 kgf (24.9 lbf)	
Track	Width	381 mm (15 in)	
	Length	3 m (120.1 in)	
	Profile height	25.4 mm (1 in)	31.8 mm (1.25 in)
Track adjustment	Deflection	30 mm to 35 mm (1.181 in to 1.378 in)	
	Force	7.3 kgf (16.1 lbf)	
BRAKE SYSTEM			
Brake lining minimum thickness		1 mm (.039 in)	
Brake disk minimum thickness		4.5 mm (.177 in)	
Brake fluid	Type	DOT 4	
	Quantity	65 ml (2.2 U.S. oz)	
SUSPENSION			
FRONT			
Suspension type		REV-XP	
Suspension maximum travel		229 mm (9 in)	
Shock absorber type		H.P.G. T/A	H.P.G. racing clicker (aluminum)
Spring color		Silver/Silver/Green EUR: White/Silver/Green	
Stabilizer bar type		Link	

www.midwestmanuals.com

MODEL		MX Z	
		TNT	X
SUSPENSION (cont'd)			
REAR			
Suspension type		SC-5	
Suspension maximum travel		381 mm (15 in)	
Shock absorber type		H.P.G. T/A (aluminum)	
		H.P.G. T/A	H.P.G. racing clicker (aluminum)
Spring color	Center	Gold/Red/Red	
Stroke limiter standard position		3	
STEERING SYSTEM			
Ski type		Pilot 5.7	
Toe-out		5 mm (.197 in)	
Camber		0°	
WEIGHT AND DIMENSIONS			
Mass (dry)		188 kg (414 lb)	
Length		289 cm (113.8 in)	
Width		122 cm (48 in)	
Height		113 cm (44.5 in)	111 cm (44 in)
Ski stance (carbide to carbide)		119.5 cm (47 in)	
MATERIAL			
Frame		Aluminum	
Bottom pans, gauge support and side panels		Polypropylene	
Hood and console		Surlyn	

www.midwestmanuals.com

MODEL			MX Z	
			Renegade	Renegade X
ENGINE				
Engine type			593	
Number of cylinder			2	
Bore			72 mm (2.835 in)	
Stroke			73 mm (2.874 in)	
Displacement			594.4 cm³ (36.27 in³)	
Compression ratio			12.25 ± 0.5	
Maximum power engine speed			8100 ± 100 RPM	
Combustion chamber volume			25.30 ml to 27.60 ml (.86 U.S. oz to .93 U.S. oz)	
3D RAVE spring	Compression spring	Color	Red	
		Wire diameter	0.8 mm (.031 in)	
		Minimum free length	45 mm (1.772 in)	
	Valve springs	Color	Red	
		Wire diameter	0.7 mm (.0276 in)	
		Minimum free length	35 mm (1.378 in)	
Piston ring type			Semi-trapezoidal	
Ring end gap		New	0.4 mm to 0.55 mm (.016 in to .022 in)	
		Wear limit	1 mm (.039 in)	
Ring/piston groove clearance		New	0.05 mm to 0.1 mm (.002 in to .0039 in)	
		Wear limit	0.2 mm (.0079 in)	
Piston/cylinder wall clearance		New	0.13 mm ± 0.022 mm (.0051 in ± .0009 in)	
		Wear limit	0.2 mm (.0079 in)	
Piston skirt wear		Wear limit	0.15 mm (.006 in)	
Cylinder head warpage		Wear limit	0.5 mm (.0197 in)	
Cylinder taper		New (max.)	0.05 mm (.002 in)	
		Wear limit	0.1 mm (.0039 in)	
Cylinder out of round		New (max.)	0.012 mm (.0005 in)	
		Wear limit	0.08 mm (.0031 in)	
Crankshaft end play		New	MIN.: 0.10 mm (.0039 in) MAX.: 0.30 mm (.0118 in)	
Crankshaft deflection		MAX.	MAG: 0.05 mm (.002 in) CENTER: 0.08 mm (.0031 in) PTO: 0.06 mm (.0024 in)	
Connecting rod big end axial play		New	0.28 mm to 0.68 mm (.011 in to .0268 in)	
		Wear limit	1.2 mm (.0472 in)	

www.midwestmanuals.com

MODEL			MX Z	
			Renegade	Renegade X
COOLING SYSTEM				
Coolant		Type	Ethyl glycol and distilled water (50%/50%). Use BRP premix coolant (P/N 219 700 362) or coolant specifically formulated for aluminum engines	
		Quantity	4.5 L (1.19 U.S. gal.)	
Thermostat opening temperature			37°C (99°F)	
Radiator cap opening pressure			90 kPa (13 PSI)	
LUBRICATION SYSTEM				
Oil injection pump type			Electronic oil injection pump	
Injection oil		Type	XP-S synthetic blend 2-stroke oil (P/N 293 600 100)	
		Quantity	3.7 L (125.1 U.S. oz)	
FUEL SYSTEM				
Fuel delivery			E-TEC direct injection	
Throttle body			Dell'Orto 46 mm	
Fuel pump			In-tank electrical fuel pump	
Idle speed (not adjustable)			1200 ± 200 RPM	
Fuel	Type		Premium unleaded gasoline	
	Octane rating	Inside North America ((R+M)/2)	Recommended: 91, accepted: 87	
		Outside North America (RON)	Recommended: 95, accepted: 92	
Fuel tank capacity			40 L (10.6 U.S. gal.)	
ELECTRICAL SYSTEM				
Lightning system output			12 V/360 W 55 V/1100 W	
Ignition type			Inductive	
Spark plug		Make and type	NGK PZFR6F (engine and spark plug threads are indexed)	
		Gap	Not adjustable 0.7 mm to 0.8 mm (.028 in to .031 in)	
Ignition timing BTDC			28° @ 3500 ± 500 RPM	
			5.39 mm (.212 in)	
Crankshaft position sensor (CPS)			190 to 290 Ω	
Stator			below 1 Ω	
Headlamp			2 x 60/55 W (H4)	
Taillight and stoplight			5/21 W	
Fuses		RER	5 A	
		Fuel level sensor	0.25 A	

www.midwestmanuals.com

MODEL		MX Z	
		Renegade	Renegade X
DRIVE SYSTEM			
Chaincase oil	Type	XP-S synthetic chaincase oil (P/N 413 803 300)	
	Quantity	250 ml (8.5 U.S. oz)	
Chain drive ratio		21/45	
Chain	Pitch	3/8	
	Type/links qty/plate qty	Silent 102/13	
Drive pulley type		TRA III	
Drive pulley calibration	Clutch engagement	3400 ± 100 RPM	
	Spring color	Blue/Blue	
	Spring length	99.8 mm (4.512 in)	
	Pin	Solid (P/N 417 004 308)	
	Ramp	412	
	Screw position	3	
Driven pulley type	Type	QRS	
	Spring color	Green	
	Spring preload	0	
	Cam angle	48°	
Pulley distance	Z	21 mm (.827 in) (not adjustable)	
Offset	X	37.1 mm (1.461 in) (not adjustable)	
Drive belt part number		(P/N 417 300 383)	
Drive belt	Width	38.3 mm (1.508 in)	
	Wear limit	35.9 mm (1.413 in)	
Drive belt adjustment	Deflection	32 mm ± 5 mm (1.26 in ± .197 in)	
	Force	11.3 kgf (24.9 lbf)	
Track	Width	381 mm (15 in)	
	Length	3 m (120.1 in)	
	Profile height	31.8 mm (1.25 in)	
Track adjustment	Deflection	30 mm to 35 mm (1.181 in to 1.378 in)	
	Force	7.3 kgf (16.1 lbf)	
BRAKE SYSTEM			
Brake lining minimum thickness		1 mm (.039 in)	
Brake disk minimum thickness		4.5 mm (.177 in)	
Brake fluid	Type	DOT 4	
	Quantity	65 ml (2.2 U.S. oz)	

www.midwestmanuals.com

MODEL		MX Z	
		Renegade	Renegade X
SUSPENSION			
FRONT			
Suspension type		REV-XP	
Suspension maximum travel		229 mm (9 in)	
Shock absorber type		H.P.G.	H.P.G. racing clicker (aluminum)
Spring color		Silver/Gold/Green	Silver/Silver/Green **EUR:** White/Silver/Green
Stabilizer bar type		Link	
REAR			
Suspension type		SC-5	
Suspension maximum travel		381 mm (15 in)	
Shock absorber type		H.P.G.	H.P.G. T/A (aluminum)
		H.P.G.	H.P.G. racing clicker (aluminum)
Spring color	Center	White/White/Gold	
Stroke limiter standard position		3	
STEERING SYSTEM			
Ski type		Pilot 5.7 **EUR:** Pilot 6.9	Pilot 5.7
Toe-out		5 mm (.197 in)	
Camber		0°	
WEIGHT AND DIMENSIONS			
Mass (dry)		197 kg (414 lb)	194 kg (428 lb)
Length		311 cm (122.4 in) **EUR:** 318 cm (125 in)	
Width		122 cm (48 in) **EUR:** 125 cm (49 in)	
Height		121 cm (47.6 in)	
Ski stance (carbide to carbide)		122 cm (48 in)	
MATERIAL			
Frame		Aluminum	
Bottom pans, gauge support and side panels		Polypropylene	
Hood and console		Surlyn	

www.midwestmanuals.com

MODEL			SUMMIT	
			Everest	X
ENGINE				
Engine type			593	
Number of cylinder			2	
Bore			72 mm (2.835 in)	
Stroke			73 mm (2.874 in)	
Displacement			594.4 cm³ (36.27 in³)	
Compression ratio			12.25 ± 0.5	
Maximum power engine speed			8100 ± 100 RPM	
Combustion chamber volume			25.30 ml to 27.60 ml (.86 U.S. oz to .93 U.S. oz)	
3D RAVE spring	Compression spring	Color	Red	
		Wire diameter	0.8 mm (.031 in)	
		Minimum free length	45 mm (1.772 in)	
	Valve springs	Color	Red	
		Wire diameter	0.7 mm (.0276 in)	
		Minimum free length	35 mm (1.378 in)	
Piston ring type			Semi-trapezoidal	
Ring end gap		New	0.4 mm to 0.55 mm (.016 in to .022 in)	
		Wear limit	1 mm (.039 in)	
Ring/piston groove clearance		New	0.05 mm to 0.1 mm (.002 in to .0039 in)	
		Wear limit	0.2 mm (.0079 in)	
Piston/cylinder wall clearance		New	0.13 mm ± 0.022 mm (.0051 in ± .0009 in)	
		Wear limit	0.2 mm (.0079 in)	
Piston skirt wear		Wear limit	0.15 mm (.006 in)	
Cylinder head warpage		Wear limit	0.5 mm (.0197 in)	
Cylinder taper		New (max.)	0.05 mm (.002 in)	
		Wear limit	0.1 mm (.0039 in)	
Cylinder out of round		New (max.)	0.012 mm (.0005 in)	
		Wear limit	0.08 mm (.0031 in)	
Crankshaft end play		New	MIN.: 0.10 mm (.0039 in) MAX.: 0.30 mm (.0118 in)	
Crankshaft deflection		MAX.	MAG: 0.05 mm (.002 in) CENTER: 0.08 mm (.0031 in) PTO: 0.06 mm (.0024 in)	
Connecting rod big end axial play		New	0.28 mm to 0.68 mm (.011 in to .0268 in)	
		Wear limit	1.2 mm (.0472 in)	

www.midwestmanuals.com

MODEL			SUMMIT	
			Everest	X
COOLING SYSTEM				
Coolant		Type	Ethyl glycol and distilled water (50%/50%). Use BRP premix coolant (P/N 219 700 362) or coolant specifically formulated for aluminum engines	
		Quantity	4.7 L (1.24 U.S. gal.)	4.8 L (1.27 U.S. gal.)
Thermostat opening temperature			37°C (99°F)	
Radiator cap opening pressure			90 kPa (13 PSI)	
LUBRICATION SYSTEM				
Oil injection pump type			Electronic oil injection pump	
Injection oil		Type	XP-S synthetic blend 2-stroke oil (P/N 293 600 100)	
		Quantity	3.7 L (125.1 U.S. oz)	
FUEL SYSTEM				
Fuel delivery			E-TEC direct injection	
Throttle body			Dell'Orto 46 mm	
Fuel pump			In-tank electrical fuel pump	
Idle speed (not adjustable)			1200 ± 200 RPM	
Fuel	Type		Premium unleaded	
	Octane rating	Inside North America ((R+M)/2)	Recommended: 91, accepted: 87	
		Outside North America (RON)	Recommended: 95, accepted: 92	
Fuel tank capacity			40 L (10.6 U.S. gal.)	
ELECTRICAL SYSTEM				
Lightning system output			12 V/360 W 55 V/1100 W	
Ignition type			Inductive	
Spark plug		Make and type	NGK PZFR6F (engine and spark plug threads are indexed)	
		Gap	Not adjustable 0.7 mm to 0.8 mm (.028 in to .031 in)	
Ignition timing BTDC			28° @ 3500 ± 500 RPM	
			5.39 mm (.212 in)	
Crankshaft position sensor (CPS)			190 to 290 Ω	
Stator			below 1 Ω	
Headlamp			2 x 60/55 W (H4)	
Taillight and stoplight			5/21 W	
Fuses		RER	5 A	
		Fuel level sensor	0.25 A	

www.midwestmanuals.com

MODEL		SUMMIT	
		Everest	X
DRIVE SYSTEM			
Chaincase oil	Type	XP-S synthetic chaincase oil (P/N 413 803 300)	
	Quantity	250 ml (8.5 U.S. oz)	
Chain drive ratio		19/49	
Chain	Pitch	3/8	
	Type/links qty/plate qty	Silent 104/13	
Drive pulley type		TRA III	
Drive pulley calibration	Clutch engagement	4000 ± 100 RPM	
	Spring color	Purple/Green	
	Spring length	157.9 mm (6.217 in)	
	Pin	1 x 417 222 477 + 1 x 206 261 699	
	Ramp	440	
	Screw position	3	
Driven pulley type	Type	QRS	
	Spring color	Black	
	Spring preload	0	
	Cam angle	41°/45°	
Pulley distance	Z	21 mm (.827 in) (not adjustable)	
Offset	X	37.1 mm (1.461 in) (not adjustable)	
Drive belt part number		(P/N 417 300 383)	
Drive belt	Width	38.3 mm (1.508 in)	
	Wear limit	35.9 mm (1.413 in)	
Drive belt adjustment	Deflection	32 mm ± 5 mm (1.26 in ± .197 in)	
	Force	11.3 kgf (24.9 lbf)	
Track	Width	381 mm (15 in)	
	Length	3 m (120.1 in)	
	Profile height	31.8 mm (1.25 in)	
Track adjustment	Deflection	30 mm to 35 mm (1.181 in to 1.378 in)	
	Force	7.3 kgf (16.1 lbf)	
BRAKE SYSTEM			
Brake lining minimum thickness		1 mm (.039 in)	
Brake disk minimum thickness		4.5 mm (.177 in)	
Brake fluid	Type	DOT 4	
	Quantity	65 ml (2.2 U.S. oz)	

www.midwestmanuals.com

MODEL		SUMMIT	
		Everest	X
SUSPENSION			
FRONT			
Suspension type		REV-XP	
Suspension maximum travel		229 mm (9 in)	
Shock absorber type		H.P.G.	H.P.G. T/A (aluminum)
Spring color		Silver/Silver/White	
Stabilizer bar type		Link	
REAR			
Suspension type		SC-5 M	
Suspension maximum travel		381 mm (15 in)	
Shock absorber type		H.P.G.	H.P.G. T/A (aluminum)
		H.P.G.	H.P.G. T/A (aluminum)
Spring color	Center	**Short:** Silver/Red/Red **Long:** Gold/Blue/White	
Stroke limiter standard position		3	
STEERING SYSTEM			
Ski type		Pilot 6.9	
Toe-out		5 mm (.197 in)	
Camber		0°	
WEIGHT AND DIMENSIONS			
Mass (dry)		197 kg (414 lb)	191 kg (421 lb)
Length		320 cm (126 in) **EUR:** 327 cm (129 in)	320 cm (126 in)
Width		120 cm (48 in)	
Height		130 cm (51.2 in)	
Ski stance (carbide to carbide)		114 cm to 118 cm (44.9 in to 46.5 in)	
MATERIAL			
Frame		Aluminum	
Bottom pans, gauge support and side panels		Polypropylene	
Hood and console		Surlyn	

www.midwestmanuals.com

800R MODELS

MODEL		MX Z 800R POWER TEK			
		Adrenaline	X	Renegade	Renegade X
ENGINE					
Engine type		797			
Number of cylinders		2			
Bore		82 mm (3.228 in)			
Stroke		75.7 mm (2.98 in)			
Displacement		799.5 cm^3 (48.79 in^3)			
Compression ratio		12.2 ± 0.5			
Maximum power engine speed		8150 ± 100 RPM			
Combustion chamber volume		34.08 ml to 37.26 ml (1.15 U.S. oz to 1.26 U.S. oz)			
RAVE spring	Color	Red			
	Wire diameter	0.8 mm (.031 in)			
	Minimum free length	45 mm (1.772 in)			
Piston ring type		Semi-trapezoidal			
Ring end gap	New	0.4 mm to 0.6 mm (.0157 in to .0236 in)			
	Wear limit	1 mm (.039 in)			
Ring/piston groove clearance	New	0.06 mm to 0.1 mm (.0024 in to .0039 in)			
	Wear limit	0.2 mm (.0079 in)			
Piston/cylinder wall clearance	New	0.108 mm to 0.148 mm (.0043 in to .0058 in)			
	Wear limit	0.2 mm (.0079 in)			
Piston skirt wear	Wear limit	0.15 mm (.0059 in)			
Cylinder head warpage	Wear limit	0.5 mm (.0197 in)			
Cylinder taper	New (max.)	0.05 mm (.002 in)			
	Wear limit	0.1 mm (.0039 in)			
Cylinder out of round	New (max.)	0.01 mm (.0004 in)			
	Wear limit	0.08 mm (.0031 in)			
Crankshaft end play	New	MIN.: 0.10 mm (.0039 in) MAX.: 0.30 mm (.0118 in)			
Crankshaft deflection	MAX.	MAG: 0.05 mm (.002 in) CENTER: 0.04 mm (.0016 in) PTO: 0.06 mm (.0024 in)			
Connecting rod big end axial play	New	0.23 mm to 0.62 mm (.0091 in to .0244 in)			
	Wear limit	1.2 mm (.0472 in)			
COOLING SYSTEM					
Coolant	Type	Ethyl glycol and distilled water (50%/50%). Use BRP premix coolant (P/N 219 700 362) or coolant specifically formulated for aluminum engines			
	Quantity	4.5 L (1.19 U.S. gal.)		6.3 L (1.66 U.S. gal.)	
Thermostat opening temperature		37°C (99°F)			
Radiator cap opening pressure		90 kPa (13 PSI)			

www.midwestmanuals.com

MODEL		MX Z 800R POWER TEK			
		Adrenaline	X	Renegade	Renegade X
LUBRICATION SYSTEM					
Injection oil	Type	XP-S synthetic blend 2-stroke oil (P/N 293 600 100)			
	Quantity	3.7 L (125.1 U.S. oz)			
FUEL SYSTEM					
Carburetor type		TM40			
Main jet		480			
Needle jet		P-0M			
Pilot jet		17.5			
Jet needle identification		9EGI04 – 58			
Clip position number		Not adjustable			
Slide cut-away		2.0			
Idle throttle slide height		1.6 mm ± 0.1 mm (.063 in ± .004 in)			
Float adjustment		Not adjustable			
Air or pilot screw adjustment		1.5 ± 1/16 turn			
Idle speed		1600 ± 200 RPM			
Fuel type		Premium unleaded gasoline			
Fuel octane rating	Inside North America ((R+M)/2)	91 or higher			
	Outside North America (RON)	95 or higher			
Fuel tank capacity		40 L (10.6 U.S. gal.)			
Gas/oil ratio		Injection			
ELECTRICAL SYSTEM					
Magneto generator output		360 W @ 6000 RPM			
Ignition type		C.D.I.			
Spark plug	Make and type	NGK BR9ECS			
	Gap	Not adjustable 0.7 mm to 0.8 mm (.028 in to .031 in)			
Ignition timing BTDC		2.37 mm (.093 in) @ 3500 RPM			
Trigger coil		190 to 300 Ω			
Lighting coil		0.1 to 1.0 Ω			
High tension coil	Primary	0.3 to 0.7 Ω			
	Secondary	18 to 26 KΩ (with caps)			
Battery		12 V, 18 A•h (with electric starter) 12 V, 3 A•h (without electric starter)			
Headlamp		2 x 60/55 W (H4)			
Taillight and stoplight		5/21 W			
Fuse	Main	30 A (with electric starter)			
	ECM	5 A (with electric starter)			
	Headlamp	15 A			
	Accessories	20 A			
	Fuel level sensor	0.25 A (if applicable)			

www.midwestmanuals.com

MODEL		MX Z 800R POWER TEK			
		Adrenaline	X	Renegade	Renegade X
DRIVE SYSTEM					
Chaincase oil	Type	XP-S synthetic chaincase oil (P/N 413 803 300)			
	Quantity	250 ml (8.5 U.S. oz)			
Chain drive ratio		27/45		25/45 EUR: 23/45	
Chain	Pitch	3/8			
	Type/links qty/plate qty	Silent 106/13		Silent 104/13	
Drive pulley type		TRA VII			
Drive pulley calibration	Clutch engagement	3800 ± 100 RPM			
	Spring color	Purple/Blue			
	Spring length	114.6 mm (4.512 in)			
	Pin	Solid (P/N 417 222 594)			
	Ramp	414		413	
	Screw position	3			
Driven pulley type	Type	QRS			
	Spring color	Green			
	Spring preload	0			
	Cam angle	47°/44°		44°/42°	
Pulley distance	Z	Not adjustable 21 mm (.827 in)			
Offset	X	Not adjustable 37.1 mm ± 0.5 mm (1.461 in ± .02 in)			
Drive belt part number		(P/N 417 300 383)			
Drive belt	Width	38.3 mm (1.508 in)			
	Wear limit	35.9 mm (1.413 in)			
Drive belt adjustment	Deflection	32 mm ± 5 mm (1.26 in ± .197 in)			
	Force	11.3 kgf (24.9 lbf)			
Track	Width	381 mm (15 in)		406.4 mm (16 in)	
	Length	305 cm (120 in)		349 cm (137 in)	
	Profile height	24.5 mm (1 in)	31.8 mm (1.25 in)	44.5 mm (1.75 in)	31.8 mm (1.25 in) EUR: 44.5 mm (1.75 in)
Track adjustment	Deflection	30 mm to 35 mm (1.181 in to 1.378 in)			
	Force	7.3 kgf (16.1 lbf)			
BRAKE SYSTEM					
Brake lining minimum thickness		1 mm (.039 in)			
Brake disk minimum thickness		4.5 mm (.177 in)			
Brake fluid	Type	DOT 4			
	Quantity	65 ml (2.2 U.S. oz)			

www.midwestmanuals.com

MODEL		MX Z 800R POWER TEK			
		Adrenaline	X	Renegade	Renegade X
SUSPENSION					
FRONT					
Suspension type		REV-XP			
Suspension maximum travel		229 mm (9 in)			
Shock absorber type		H.P.G.	H.P.G. clicker T/A (aluminum)	H.P.G.	H.P.G. clicker T/A (aluminum)
Spring color		Silver/Gold/Green	Silver/Silver/Green **EUR:** White/Silver/Green	Silver/Gold/Green	Silver/Silver/Green **EUR:** White/Silver/Green
Sway bar type		Link			
REAR					
Suspension type		SC-5			
Suspension maximum travel		381 mm (15 in)		331 mm (13 in)	
Shock absorber type	Center	H.P.G.	H.P.G. T/A (aluminum)	H.P.G.	H.P.G. T/A (aluminum)
	Rear	H.P.G.	H.P.G. racing clicker (aluminum)	H.P.G.	H.P.G. racing clicker (aluminum)
Spring color	Center	Gold/Red/Red		White/White/Gold	
Stroke limiter standard position		3			
STEERING SYSTEM					
Ski type		Pilot 5.7			
Toe-out		5 mm (.197 in)			
Camber		0°			
WEIGHT AND DIMENSIONS					
Mass (dry)		197 kg (434 lb)	193 kg (425 lb)	202 kg (445 lb)	198 kg (437 lb)
Length		289 cm (113.8 in)		311 cm (122.4 in)	311 cm (122.4 in) **EUR:** 318 cm (125.2 in)
Width		122 cm (48 in)			122 cm (48 in) **EUR:** 125 cm (49 in)
Height		120 cm (47.2 in)	111 cm (43.7 in)	121 cm (47.6 in)	
Ski stance (carbide to carbide)		119.5 cm (47 in)			
MATERIAL					
Frame		Aluminum			
Bottom pan and side panels		Polypropylene			
Hood		Surlyn			

www.midwestmanuals.com

MODEL		SUMMIT 800R POWER TEK			
		50th	Everest	HillClimb	X
ENGINE					
Engine type		797			
Number of cylinders		2			
Bore		82 mm (3.228 in)			
Stroke		75.7 mm (2.98 in)			
Displacement		799.5 cm³ (48.79 in³)			
Compression ratio		12.2 ± 0.5			
Maximum power engine speed		8150 ± 100 RPM			
Combustion chamber volume		34.08 ml to 37.26 ml (1.15 U.S. oz to 1.26 U.S. oz)			
RAVE spring	Color	Red			
	Wire diameter	0.8 mm (.031 in)			
	Minimum free length	45 mm (1.772 in)			
Piston ring type		Semi-trapezoidal			
Ring end gap	New	0.4 mm to 0.6 mm (.0157 in to .0236 in)			
	Wear limit	1 mm (.039 in)			
Ring/piston groove clearance	New	0.06 mm to 0.1 mm (.0024 in to .0039 in)			
	Wear limit	0.2 mm (.0079 in)			
Piston/cylinder wall clearance	New	0.108 mm to 0.148 mm (.0043 in to .0058 in)			
	Wear limit	0.2 mm (.0079 in)			
Piston skirt wear	Wear limit	0.15 mm (.0059 in)			
Cylinder head warpage	Wear limit	0.5 mm (.0197 in)			
Cylinder taper	New (max.)	0.05 mm (.002 in)			
	Wear limit	0.1 mm (.0039 in)			
Cylinder out of round	New (max.)	0.01 mm (.0004 in)			
	Wear limit	0.08 mm (.0031 in)			
Crankshaft end play	New	MIN.: 0.10 mm (.0039 in) MAX.: 0.30 mm (.0118 in)			
Crankshaft deflection	MAX.	MAG: 0.05 mm (.002 in) CENTER: 0.04 mm (.0016 in) PTO: 0.06 mm (.0024 in)			
Connecting rod big end axial play	New	0.23 mm to 0.62 mm (.0091 in to .0244 in)			
	Wear limit	1.2 mm (.0472 in)			
COOLING SYSTEM					
Coolant	Type	Ethyl glycol and distilled water (50%/50%). Use BRP premix coolant (P/N 219 700 362) or coolant specifically formulated for aluminum engines			
	Quantity	146" track: 4.7 L (158.9 U.S. oz) 154" track: 4.8 L (162.3 U.S. oz) 163" track: 4.9 L (165.7 U.S. oz)			
Thermostat opening temperature		37°C (99°F)			
Radiator cap opening pressure		90 kPa (13 PSI)			
LUBRICATION SYSTEM					
Injection oil	Type	XP-S synthetic blend 2-stroke oil (P/N 293 600 100)			
	Quantity	3.7 L (125.1 U.S. oz)			

www.midwestmanuals.com

MODEL		SUMMIT 800R POWER TEK			
		50th	Everest	HillClimb	X
FUEL SYSTEM					
Carburetor type		TM40			
Main jet		480			
Needle jet		P-0M			
Pilot jet		17.5			
Jet needle identification		9EGI04 – 58			
Clip position number		Not adjustable			
Slide cut-away		2.0			
Idle throttle slide height		2 mm ± 0.1 mm (.079 in ± .004 in)			
Float adjustment		Not adjustable			
Air or pilot screw adjustment		1.5 ± 1/16 turn			
Idle speed		1900 ± 200 RPM			
Fuel type		Premium unleaded gasoline			
Fuel octane rating	Inside North America ((R+M)/2)	91 or higher			
	Outside North America (RON)	95 or higher			
Fuel tank capacity		40 L (10.6 U.S. gal.)			
Gas/oil ratio		Injection			
ELECTRICAL SYSTEM					
Magneto generator output		360 W @ 6000 RPM			
Ignition type		C.D.I.			
Spark plug	Make and type	NGK BR9ECS			
	Gap	Not adjustable 0.70 to 0.80 (.028 to .032)			
Ignition timing BTDC		2.37 mm (.093 in) @ 3500 RPM			
Trigger coil		190 to 300 Ω			
Lighting coil		0.1 to 1.0 Ω			
High tension coil	Primary	0.3 to 0.7 Ω			
	Secondary	18 to 26 KΩ (with caps)			
Battery		12 V, 18 A•h (with electric starter) 12 V, 3 A•h (without electric starter)			
Headlamp		2 x 60/55 W (H4)			
Taillight and stoplight		5/21 W			
Fuse	Main	30 A (with electric starter)			
	ECM	5 A (with electric starter)			
	Headlamp	15 A			
	Accessories	15 A			
	Fuel level sensor	0.25 A (if applicable)			
DRIVE SYSTEM					
Chaincase oil	Type	XP-S synthetic chaincase oil (P/N 413 803 300)			
	Quantity	250 ml (8.5 U.S. oz)			
Chain drive ratio		146" and 154" tracks: 21/45 163" track: 21/49			

www.midwestmanuals.com

MODEL		SUMMIT 800R POWER TEK			
		50th	Everest	HillClimb	X
DRIVE SYSTEM (cont'd)					
Chain	Pitch	3/8			
	Type/links qty/plate qty	Silent 102/13			
Drive pulley type		TRA VII			
Drive pulley calibration	Clutch engagement	3800 ± 100 RPM			
	Spring color	Green/Purple **SUMMIT X 154" (EUR):** Purple/Blue			
	Wire diameter/spring length	5.72 mm (.225 in)/126.7 mm (4.988 in) 5.54 mm (.218 in)/133.7 mm (5.264 in) **SUMMIT X 154" (EUR):** 5.385 mm (.212 in)/114.6 mm (4.512 in)			
	Pin type	Hollow/threaded **SUMMIT X 154" (EUR):** Solid			
	Pin number	1 x 417 222 595 + 1 x 206 261 299 **SUMMIT X 154" (EUR):** 417 222 594			
	Ramp	441 **SUMMIT X 154" (EUR):** 413			
	Screw position	1 **SUMMIT X 154" (EUR):** 3			
Driven pulley type	Type	QRS			
	Spring color	Purple			
	Spring preload	0			
	Cam angle	43°/47° **SUMMIT X 154" (EUR):** 44°/42°			
Pulley distance	Z	Not adjustable 20.9 mm (.823 in)			
Offset	X	Not adjustable 36.4 mm (1.433 in)			
Drive belt part number		(P/N 417 300 377)			
Drive belt	Width	36.8 mm (1.449 in)			
	Wear limit	34.4 mm (1.354 in)			
Drive belt adjustment	Deflection	32 mm ± 5 mm (1.26 in ± .197 in)			
	Force	11.3 kgf (24.9 lbf)			
Track	Width	406.4 mm (16 in)			
	Length	392 cm (154 in)	**146" track:** 370 cm (146 in) **154" track:** 392 cm (154 in) **163" track:** 414 cm (163 in)	392 cm (154 in)	**146" track:** 370 cm (146 in) **154" track** 392 cm (154 in) **163" track:** 414 cm (163 in)
	Profile height	57.2 mm (2.25 in) **163" track:** 58.7 mm (2.31 in)			
Track adjustment	Deflection	30 mm to 35 mm (1.181 in to 1.378 in)			
	Force	7.3 kgf (16.1 lbf)			

www.midwestmanuals.com

MODEL		SUMMIT 800R POWER TEK			
		50th	Everest	HillClimb	X
BRAKE SYSTEM					
Brake lining minimum thickness		1 mm (.039 in)			
Brake disk minimum thickness		4.5 mm (.177 in)			
Brake fluid	Type	DOT 4			
	Quantity	65 ml (2.2 U.S. oz)			
SUSPENSION					
FRONT					
Suspension type		REV-XP			
Suspension maximum travel		229 mm (9 in)			
Shock absorber type		H.P.G. T/A (aluminum)	H.P.G.	H.P.G. racing clicker (aluminum)	H.P.G. T/A (aluminum)
Spring color		Silver/Silver/White		Silver/Silver/Green	—
Sway bar type		Link			
REAR					
Suspension type		SC-5M			
Suspension maximum travel		381 mm (15 in)	**146" track:** 356 mm (14 in) **154" track:** 381 mm (15 in) **163" track:** 406 mm (16 in)	381 mm (15 in)	**146" track:** 356 mm (14 in) **154" track:** 381 mm (15 in) **163" track:** 406 mm (16 in)
Shock absorber type	Center	H.P.G. T/A (aluminum)	H.P.G.	H.P.G. T/A (aluminum)	H.P.G. T/A (aluminum)
	Rear	H.P.G. T/A (aluminum)	H.P.G.	H.P.G. racing clicker (aluminum)	H.P.G. T/A (aluminum)
Spring color	Center	**Short:** Silver/Red/Red, **long:** Gold/Blue/White			
Stroke limiter standard position		2			
STEERING SYSTEM					
Ski type		Pilot 6.9			
Toe-out		5 mm (.197 in)			
Camber		0°			
WEIGHT AND DIMENSIONS					
Mass (dry)		196 kg (432 lb)	**146" track:** 198 kg (437 lb) **154" track:** 200 kg (441 lb) **163" track:** 201 kg (443 lb)	196 kg (432 lb)	**146" track:** 193 kg (425 lb) **154" track:** 195 kg (430 lb) **163" track:** 197 kg (434 lb)
Length		**146" track:** 320 cm (126 in) **154" track:** 331 cm (130.3 in) **163" track:** 342 cm (134.6 in)			
Width		120 cm (47.2 in)			
Height		130 cm (51.2 in) **HillClimb:** 100 cm (39.4 in)			
Ski stance (carbide to carbide)		108 cm (42.5 in)			

www.midwestmanuals.com

MODEL	SUMMIT 800R POWER TEK			
	50th	Everest	HillClimb	X
MATERIAL				
Frame	Aluminum			
Bottom pan and side panels	Polypropylene			
Hood	Surlyn			

www.midwestmanuals.com

www.midwestmanuals.com

WIRING DIAGRAM INFORMATION

SERVICE TOOLS

Description	Part Number	Page
CONNECTOR CRIMPING TOOL	529 035 909	630
CRIMP PLIERS	529 035 730	633
CRIMPER DIE	529 035 906	630

SERVICE TOOLS – OTHER SUPPLIER

Description	Part Number	Page
AMP EXTRACTION TERMINAL TOOL	755430-2	631
AMP EXTRACTION TERMINAL TOOL	726503-1	632
	755430-2	629–630
SNAP-ON SCREWDRIVER	TT600-5	627

SERVICE PRODUCTS

Description	Part Number	Page
DIELECTRIC GREASE	293 550 004	629

GENERAL

WIRING DIAGRAM LOCATION

Wiring diagrams are in the manual back cover pocket.

WIRING DIAGRAM CODES

The wiring diagrams use the following codes.

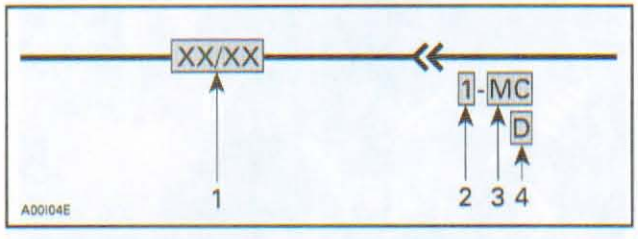

1. *Wire colors*
2. *Connector location*
3. *Connector code*
4. *Terminal position in connector*

Wire Colors

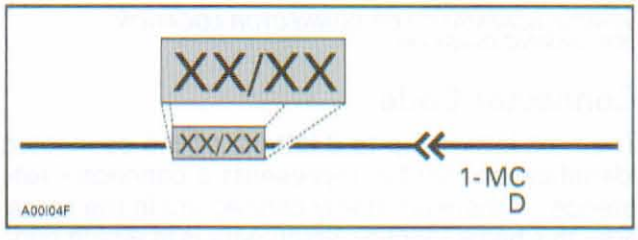

The first color of a wire is the main color, second color is the stripe.

Example: YL/BK is a YELLOW wire with a BLACK stripe.

COLOR CODE					
BE	—	BEIGE	OR	—	ORANGE
BK	—	BLACK	RD	—	RED
BU	—	BLUE	VI	—	VIOLET
BR	—	BROWN	WH	—	WHITE
GN	—	GREEN	YL	—	YELLOW
GY	—	GRAY			

www.midwestmanuals.com

Connector Location

The first digit of the connector identification number presents the location of the connector on the vehicle. It may also describe the part removal that is required to reach the connector.

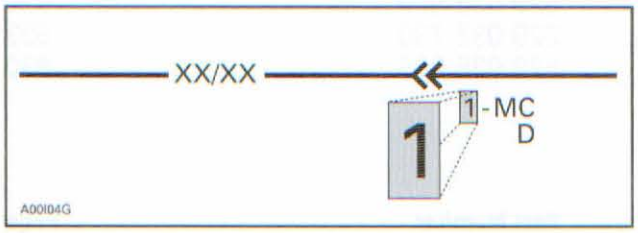

The location of the connectors are shown on the wiring diagram with a vehicle schematic as shown below.

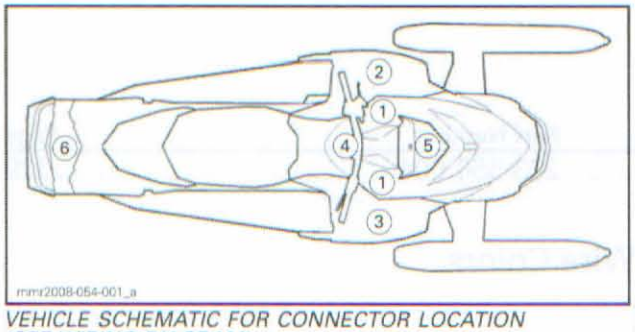

VEHICLE SCHEMATIC FOR CONNECTOR LOCATION (SEE WIRING DIAGRAM)

Connector Code

The next letters (up to 8 letters) of the connector identification number represents a connector reference. If there are many connectors in the same area this helps identify which wire is in which connector.

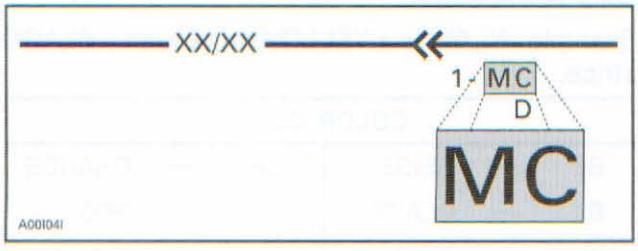

Terminal Position in Connector

The third portion of the connector identification number represents the location of the terminal in the connector. This could be identified by either a number or by a letter depending on the type of connector used.

NOTE: The terminal position identification may be also at the right most position of the description.

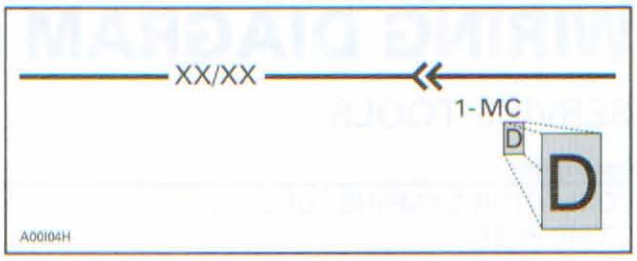

SUMITOMO CONNECTOR INFORMATION

Disconnecting the Connector

To disconnect the Sumitomo TPS connector from carburetor or throttle body, press the release button on the other side of the connector.



TPS CONNECTOR
1. Release button

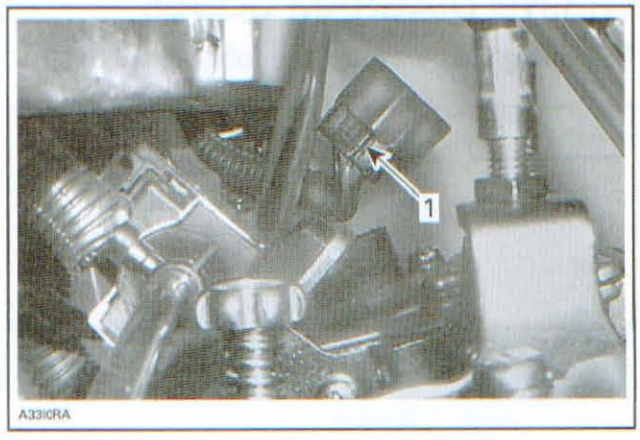

TPS CONNECTOR (UNPLUGGED)
1. Release button

www.midwestmanuals.com

DEUTSCH CONNECTOR INFORMATION

Connector Disassembly

Male Housing

Insert SNAP-ON SCREWDRIVER (P/N TT600-5) under lock and twist to lift it.

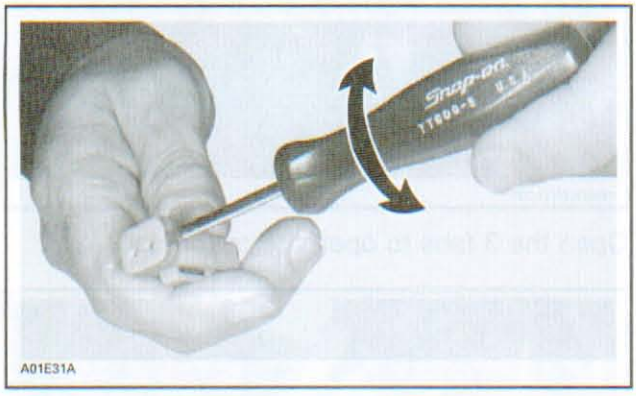

Pry tab to free connector then pull wire out of housing.

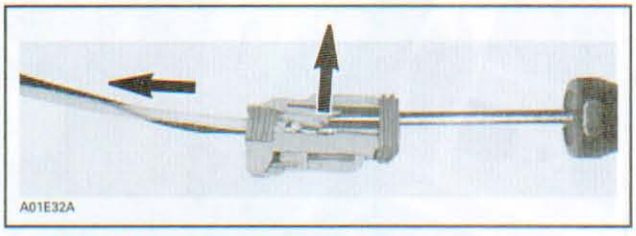

FEMALE CONNECTOR HOUSING — CUT-AWAY

Female Housing

Using a small hook, pull out the lock.

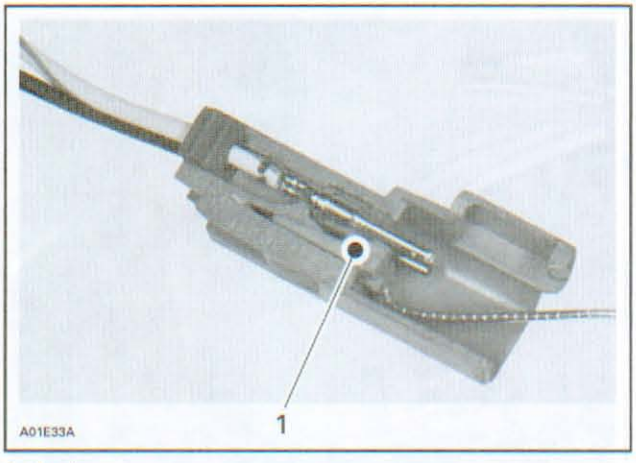

1. Lock

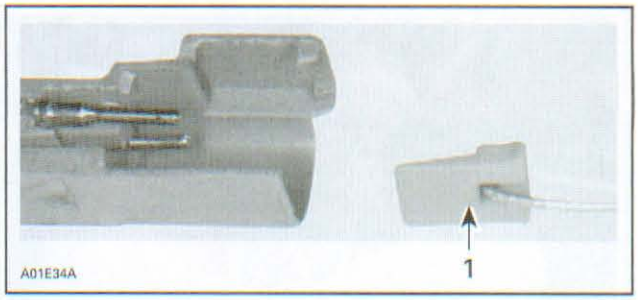

1. Lock

Pry tab to free connector then pull wire out of housing.

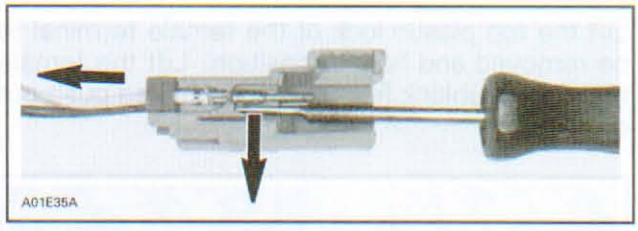

FEMALE HOUSING — CUT-AWAY

PACKARD CONNECTOR INFORMATION

Connector Disassembly

Multifunction Gauge and ECM (500SS/600/800R)

Push on both tabs to remove retainer.

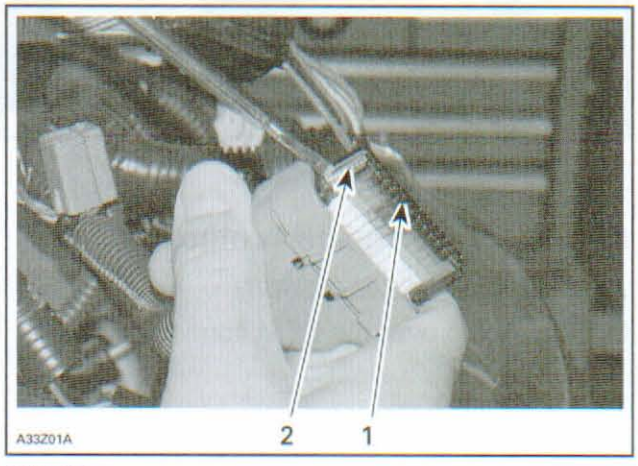

TYPICAL
1. Retainer
2. Tab (one on each side)

Open housing by lifting 4 tabs.

www.midwestmanuals.com

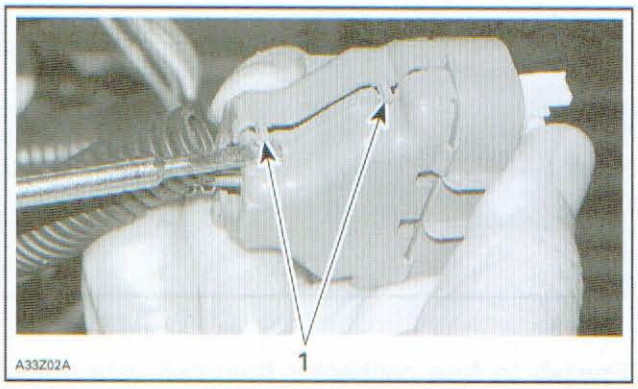

TYPICAL
1. Tabs (2 on each side)

Lift the top plastic lock of the female terminal to be removed and hold in position. Lift the female terminal to unlock from the housing and push out of housing.

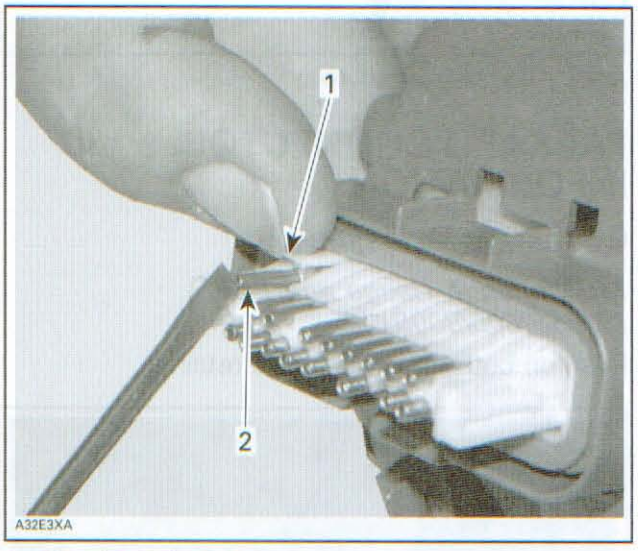

1. Lift and hold plastic lock
2. Lift to unlock and push out

Connector Corrosion Protection

ECM Only (500SS/600/800R)

Cut the tie rap over the ECM connector.

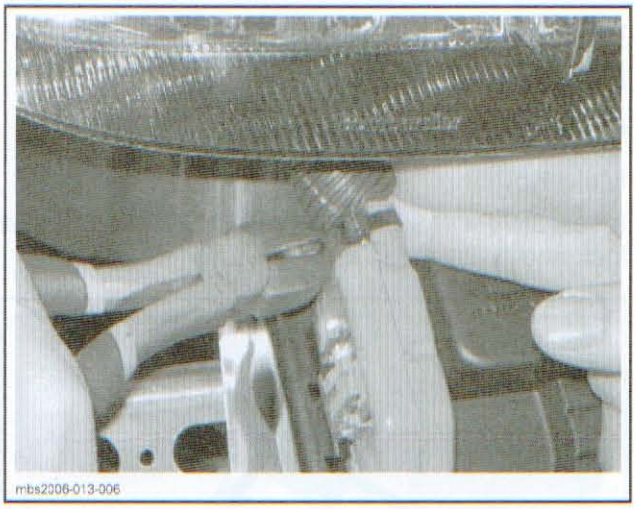

Open the 3 tabs to open the connector.

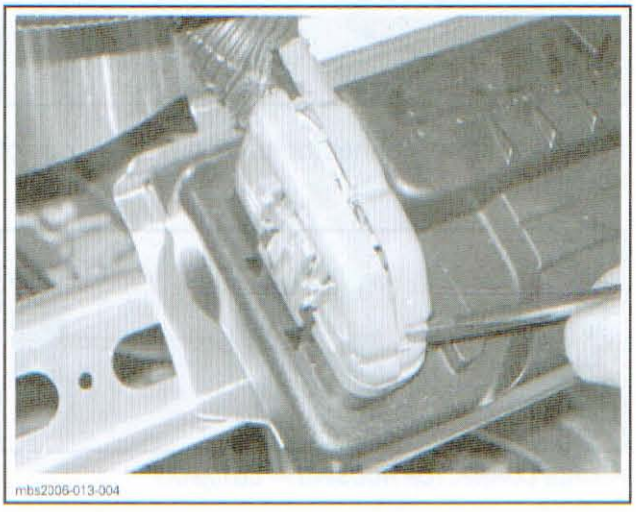

Remove at least 2 blue plug pins of the connector (keep them).

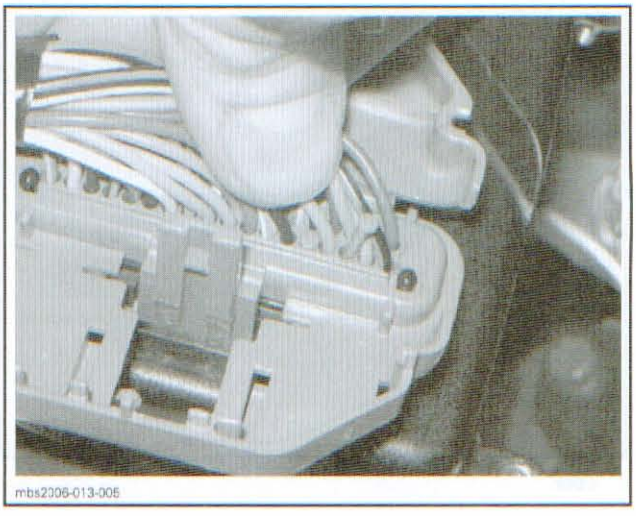

Unplug the connector from the ECM.

www.midwestmanuals.com

NOTE: Any corrosion should be carefully cleaned with a soft brass brush.

Fill the ECM socket with a generous quantity of DIELECTRIC GREASE (P/N 293 550 004).


mbs2006-013-003

SLOWLY reinstall the connector and make sure some grease come out by both holes previously opened (blue pin).

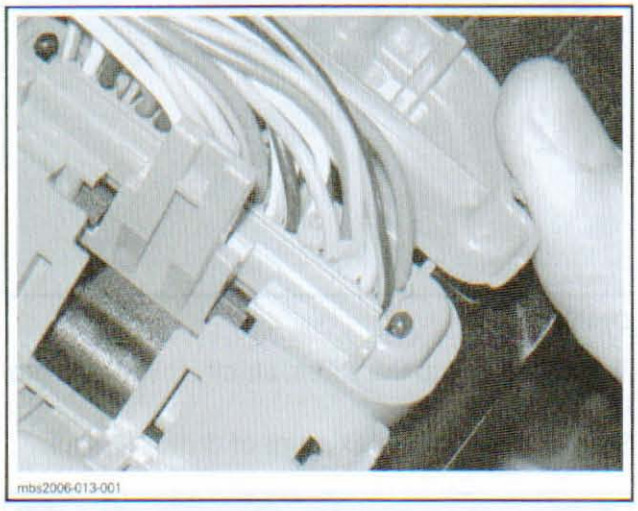
mbs2006-013-001

Reinstall both blue pins.

Close the connector.

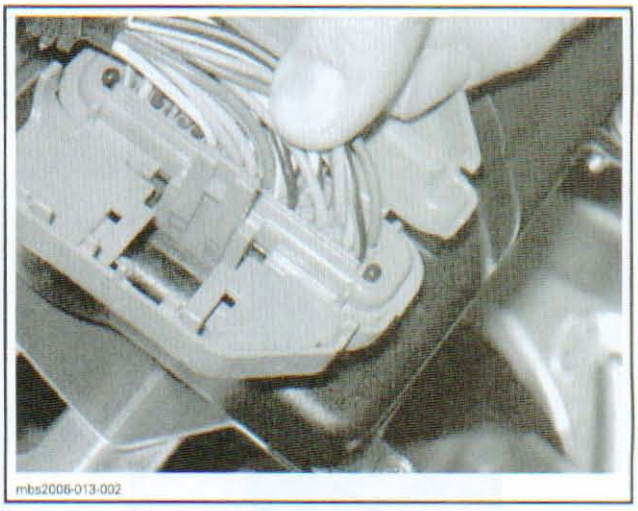
mbs2006-013-002

Reinstall a new tie rap on ECM connector.

AMP MULTILOCK CONNECTOR INFORMATION

Connector Disassembly

Male Housing

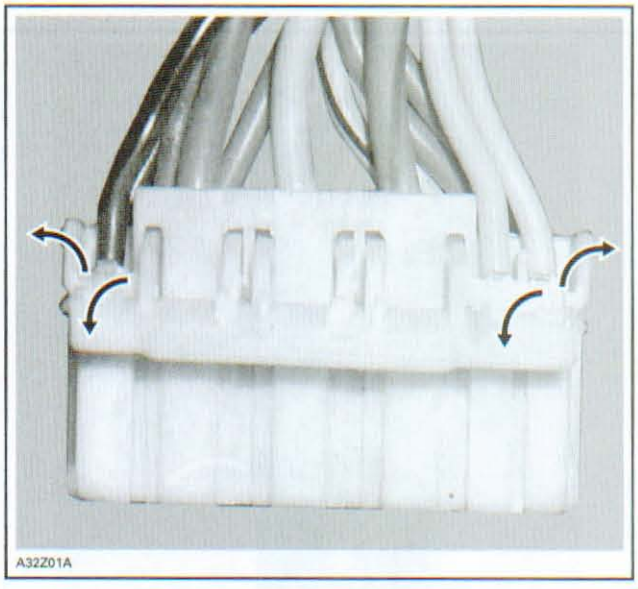
A32Z01A

Insert AMP EXTRACTION TERMINAL TOOL (P/N 755430-2) under lock and twist to lift it.

www.midwestmanuals.com

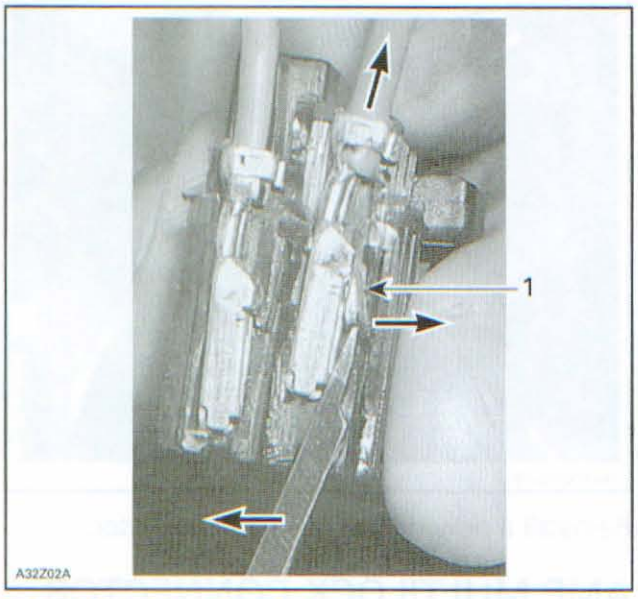

MALE HOUSING — CUT-AWAY
1. Lock

Female terminals can be removed from housing with sharp head pin.

Female Housing

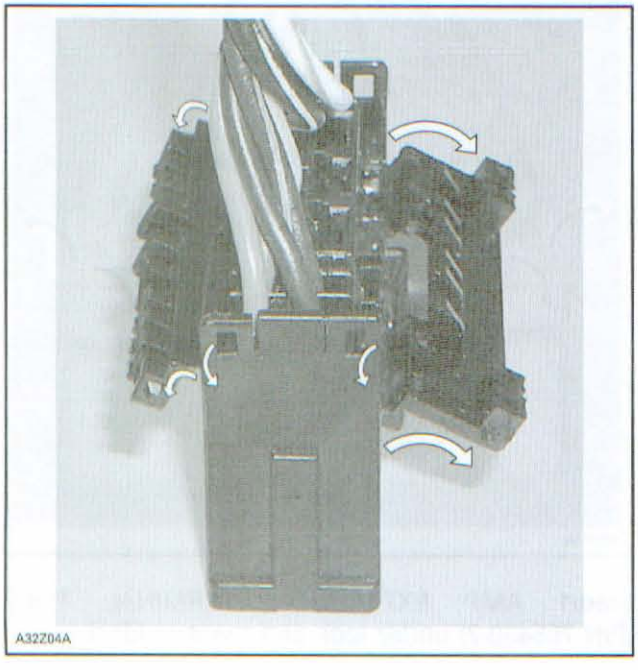

Insert AMP EXTRACTION TERMINAL TOOL (P/N 755430-2) under lock and twist to lift it.

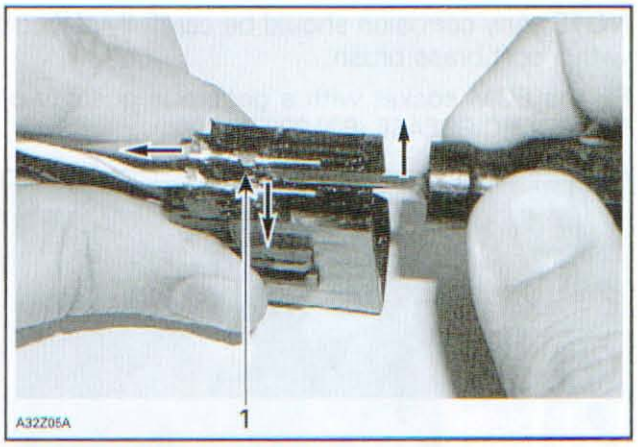

FEMALE HOUSING — CUT-AWAY
1. Lock

Terminal Crimping

To crimp a new connector terminal, use the CONNECTOR CRIMPING TOOL (P/N 529 035 909) and the CRIMPER DIE (P/N 529 035 906).

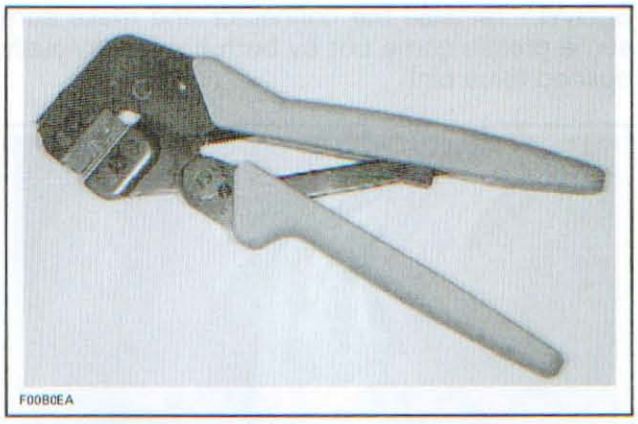

CRIMPING TOOL

To properly crimp the wires, strictly follow this procedure.

Strip the wire to a maximum of 3 mm (1/8 in).

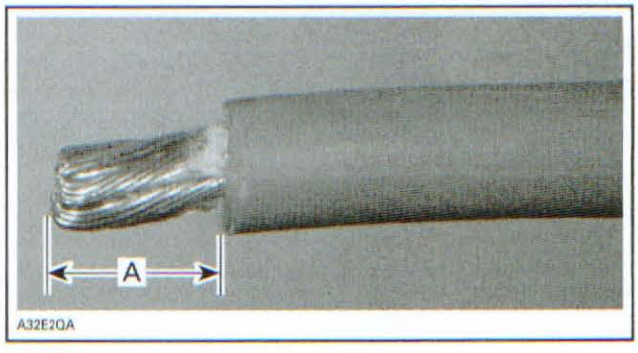

TYPICAL
A. 3 mm (1/8 in) max.

Position wire in terminal.

www.midwestmanuals.com

Squeeze the terminal tabs with your fingers to temporarily retain terminal in place.

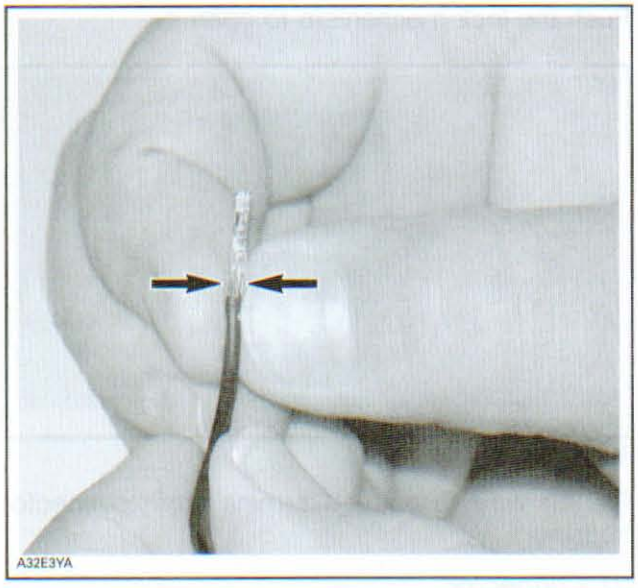

Insert terminal with wire in crimping pliers and position so that top of terminal tabs are flush with pliers edge or a little bit lower as shown.

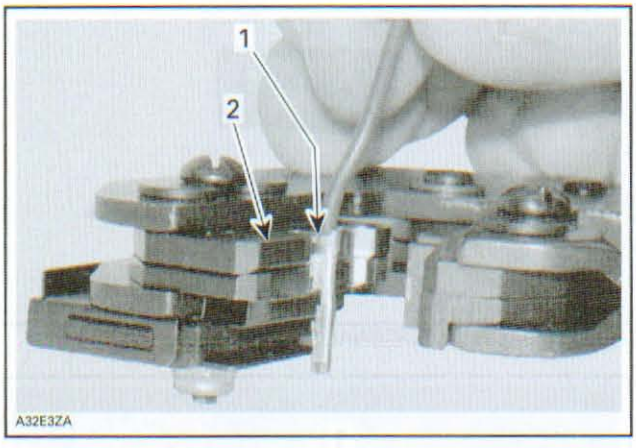

1. Top of terminal tabs
2. Align tabs with pliers edge

Crimp terminal. Ensure no tiny wire goes out of terminal. This might cause strange problems of the electrical system.

AMP CONNECTOR (8-CIRCUIT) INFORMATION

Connector Disassembly

Pry housing to release lock.

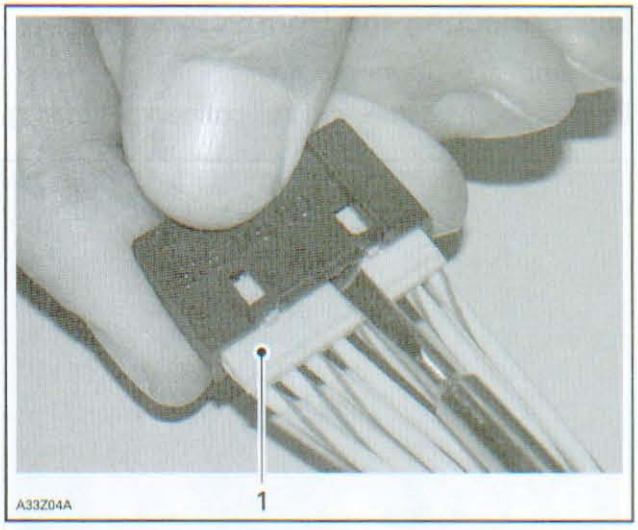

1. Lock

Insert AMP EXTRACTION TERMINAL TOOL (P/N 755430-2) under tab and pry it to free connector. Pull on the female terminal wire to remove female terminal from housing.

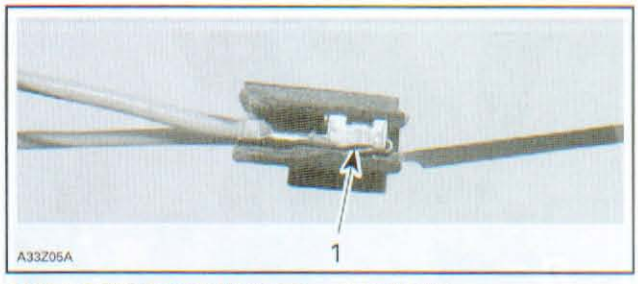

AMP 8-CIRCUIT CONNECTOR — CUT-AWAY
1. Tab

Terminal Crimping

Refer to *AMP MULTILOCK CONNECTOR INFORMATION* for procedure.

AMP CONNECTOR INFORMATION (ECM OF 600 HO E-TEC)

Connector Identification

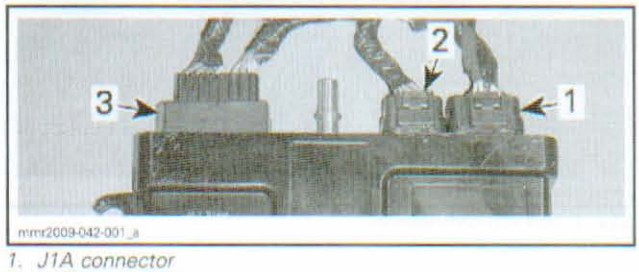

1. J1A connector
2. J1B connector
3. J2 connector

www.midwestmanuals.com

Disconnecting the Connectors

J1A and J1B Connectors

Depress both latches and pull connector housing.

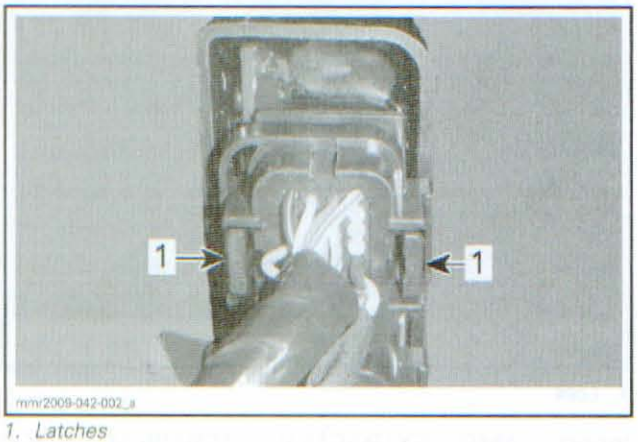

1. Latches

J2 Connector

Using a small screwdriver, open the connector clip.

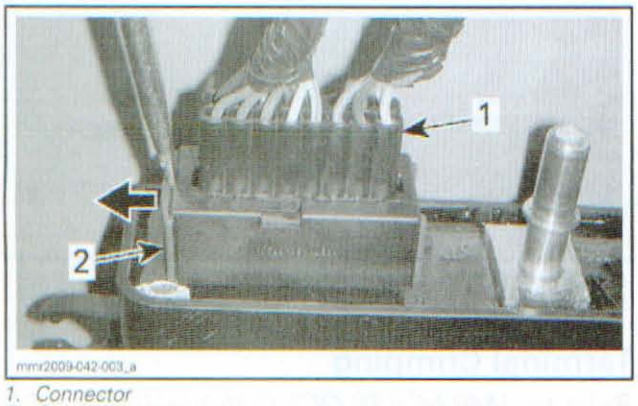

1. Connector
2. Connector clip

Pull the clip completely to remove the connector.

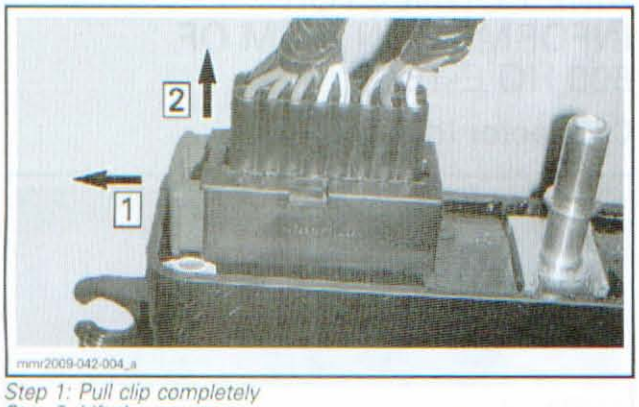

Step 1: Pull clip completely
Step 2: Lift the connector

Connector Disassembly

J1A and J1B Connectors

Push the lock mechanism to open it.

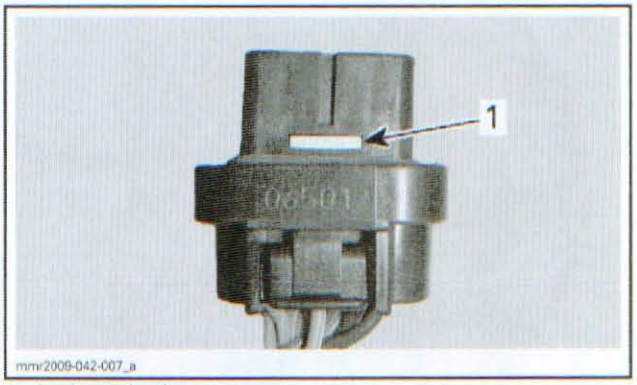

1. Lock mechanism

Pull on wire to extract terminal from connector housing.

J2 Connector

Using the AMP EXTRACTION TERMINAL TOOL (P/N 726503-1), release both locking tabs of connector. Pull terminal from housing.

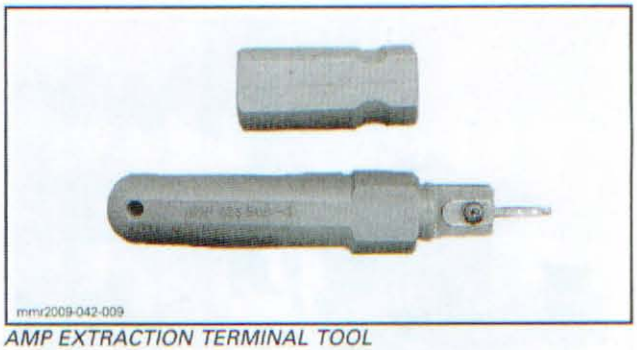

AMP EXTRACTION TERMINAL TOOL

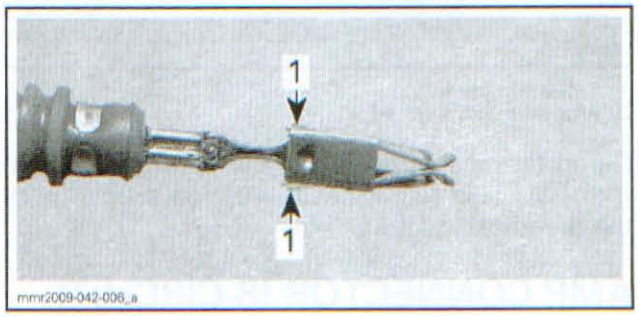

1. Locking tabs

Connector Assembly

J1A and J1B Connectors

Push terminal through seal until it is seated in connector housing.

Close the lock mechanism.

www.midwestmanuals.com

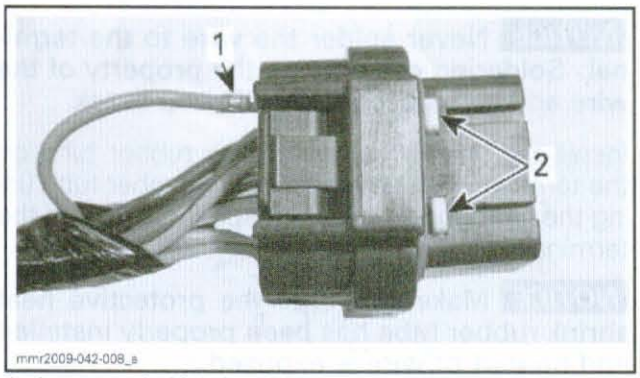

1. Insert terminal into housing
2. Push here to close the lock mechanism

NOTE: If the lock mechanism does engage it is likely due to an improperly inserted terminal. Look at the end of connector to see if a terminal is partially out. If, so push it fully into connector then lock mechanism.



1. Terminal fully inserted in connector

J2 Connector

Align terminal with connector housing and push terminal with seal into connector housing until seated.

BATTERY CABLE TERMINAL INFORMATION

Terminal Installation

Carefully strip the wire approximately to 10 mm (1/2 in) in length, using a wire stripping tool or sharp blade/knife.

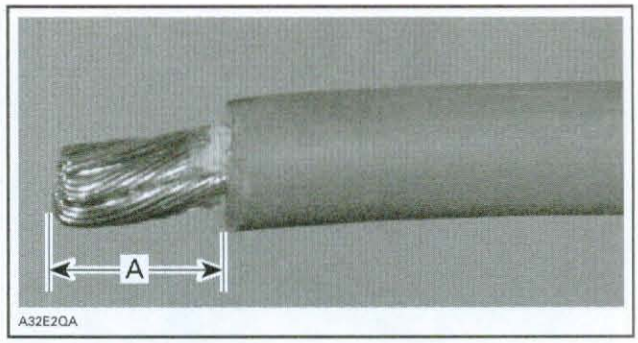

A. 10 mm (1/2 in)

NOTE: Make sure not to cut wire strands while stripping the wire.

Install the appropriate terminal on the wire according to the requirement. Refer to appropriate *PARTS CATALOG*.

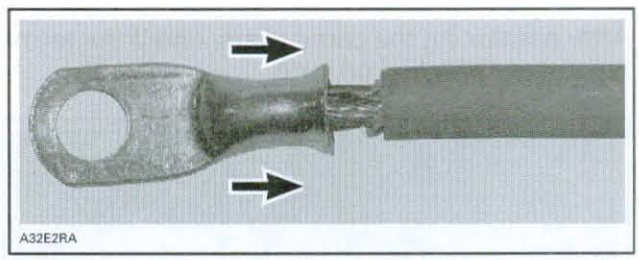

INSTALLATION OF TERMINAL

Follow the instructions provided with the CRIMP PLIERS (P/N 529 035 730) to select the proper position of the tool.

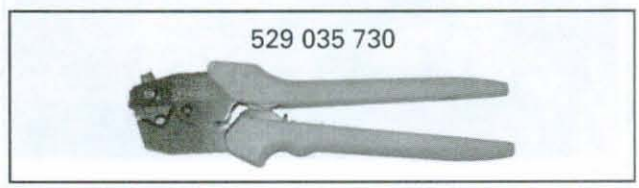

NOTE: Different wires require different crimp pliers settings, so make sure to follow the instruction supplied with the tool.

www.midwestmanuals.com

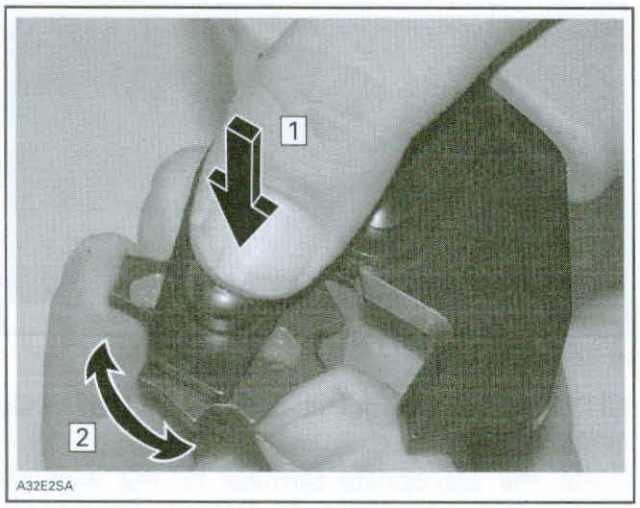

POSITIONING THE CRIMP PLIERS
Step 1: Press
Step 2: Rotate

After positioning the crimp pliers, crimp the terminal already installed on wire.

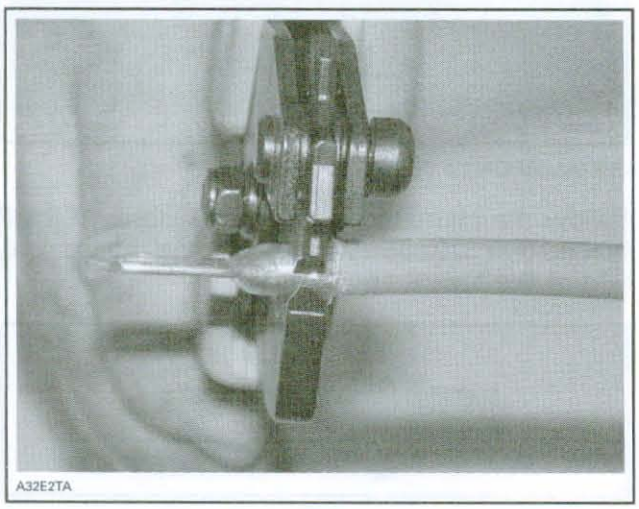

CRIMPING OF WIRE

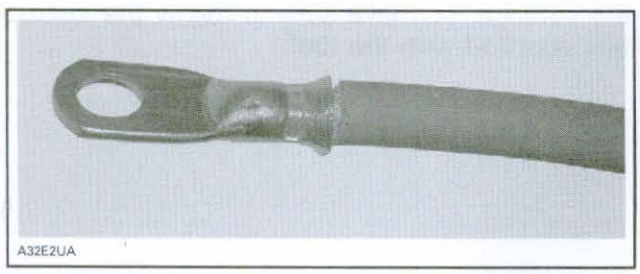

PROPERLY CRIMPED WIRE

To verify, if the wire is properly crimped, apply some pulling force on wire and the terminal at the same time from both directions.

NOTICE Never solder the wire to the terminal. Soldering can change the property of the wire and it can become brittle and break.

Install the protective heat shrink rubber tube on the terminal. Heat the heat shrink rubber tube using the heat gun so that it grasps the wire and the terminal.

NOTICE Make sure that the protective heat shrink rubber tube has been properly installed and no part of wire is exposed.

www.midwestmanuals.com

2009 REV-XP 800R

COLOR CODE	
BE	BEIGE
BK	BLACK
BR	BROWN
BU	BLUE
GN	GREEN
GY	GRAY
OR	ORANGE
PK	PINK
RD	RED
VI	VIOLET
YL	YELLOW
LT	LIGHT COLOR
SP	SPLICE

STEER

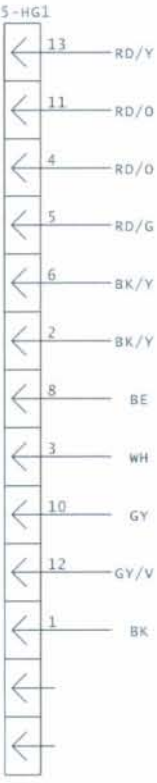

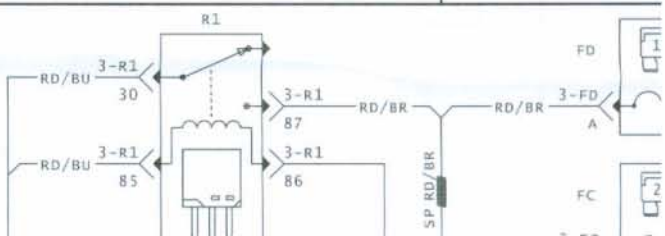

www.midwestmanuals.com

COLOR CODE	
BE	BEIGE
BK	BLACK
BR	BROWN
BU	BLUE
GN	GREEN
GY	GRAY
OR	ORANGE
PK	PINK
RD	RED
VI	VIOLET
YL	YELLOW
LT	LIGHT COLOR
SP	SPLICE

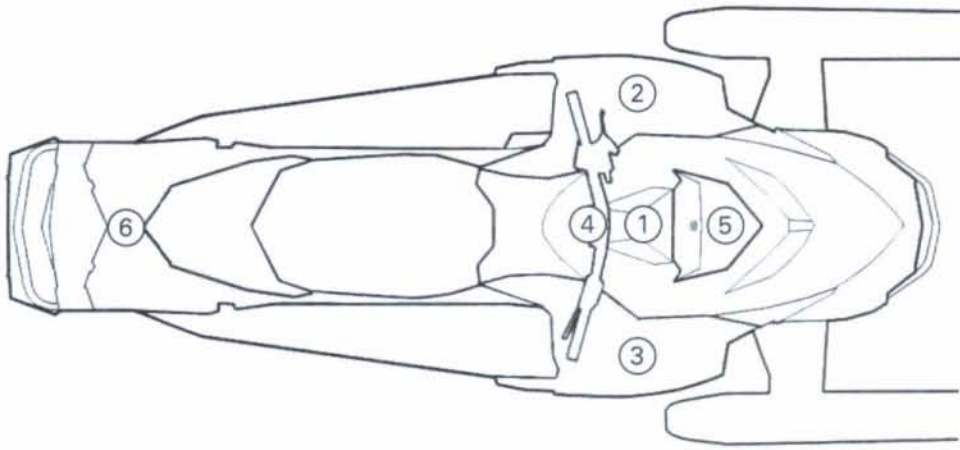

STEERING HARNESS FOR STANDARD GAUGE

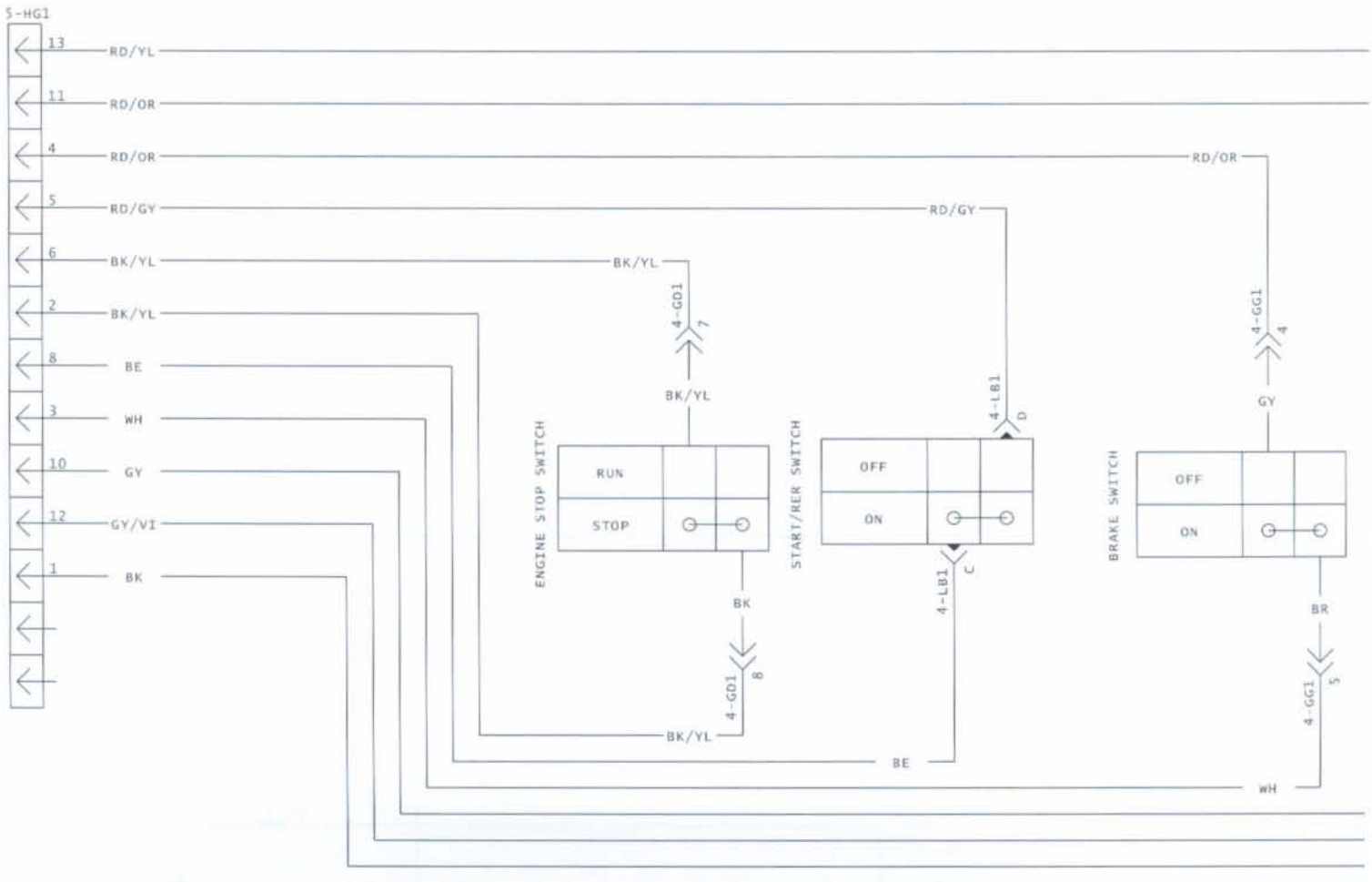



www.midwestmanuals.com

CONNECTOR LOCATION	
1	ENGINE RELATED CONNECTORS
2	LH SIDE PANEL
3	RH SIDE PANEL
4	HANDLEBAR AREA
5	BEHIND MULTI-FUNCTION GAUGE
6	REAR PART OF FRAME

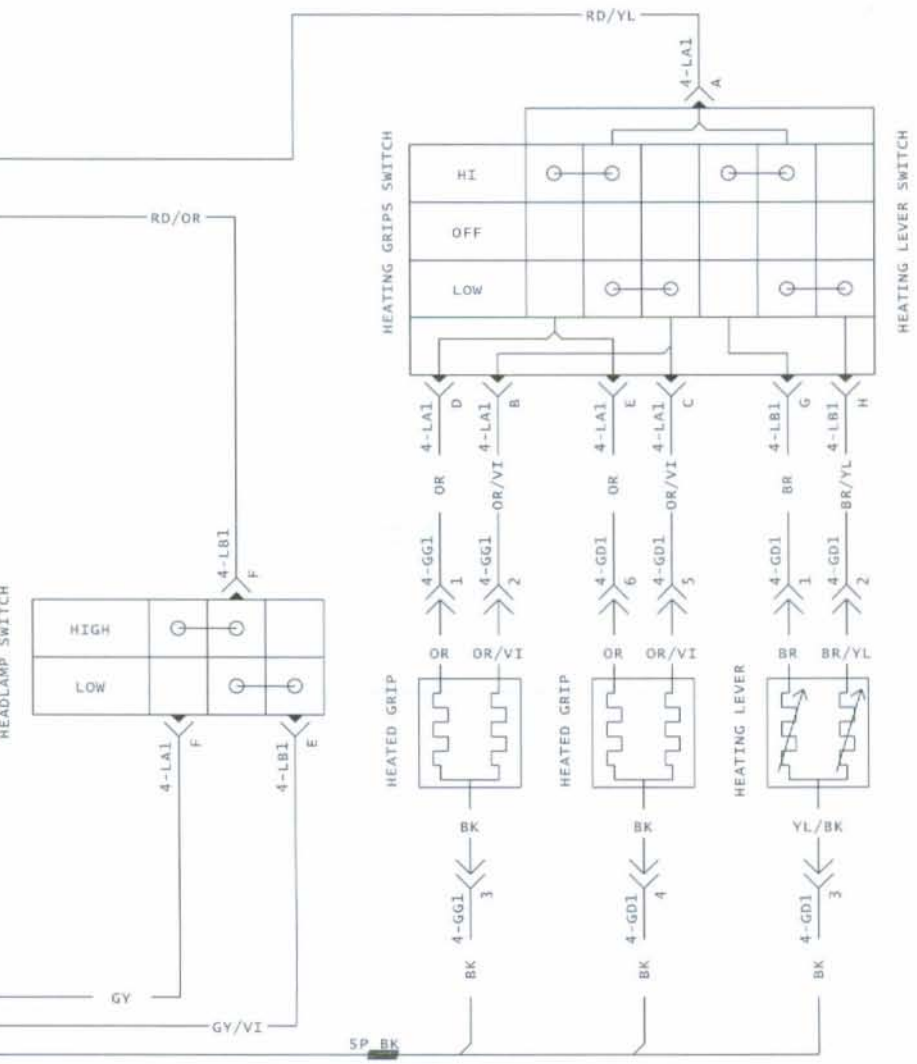

STEERING HARNESS

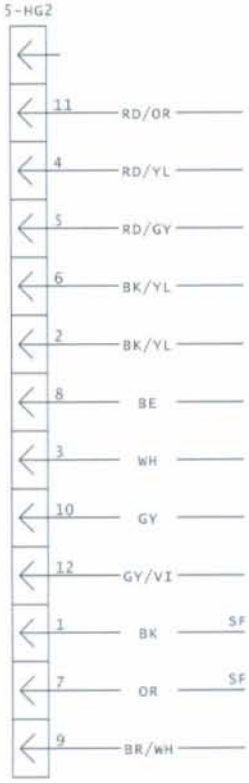

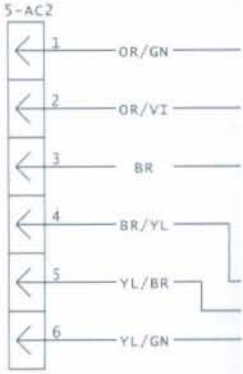

www.midwestmanuals.com

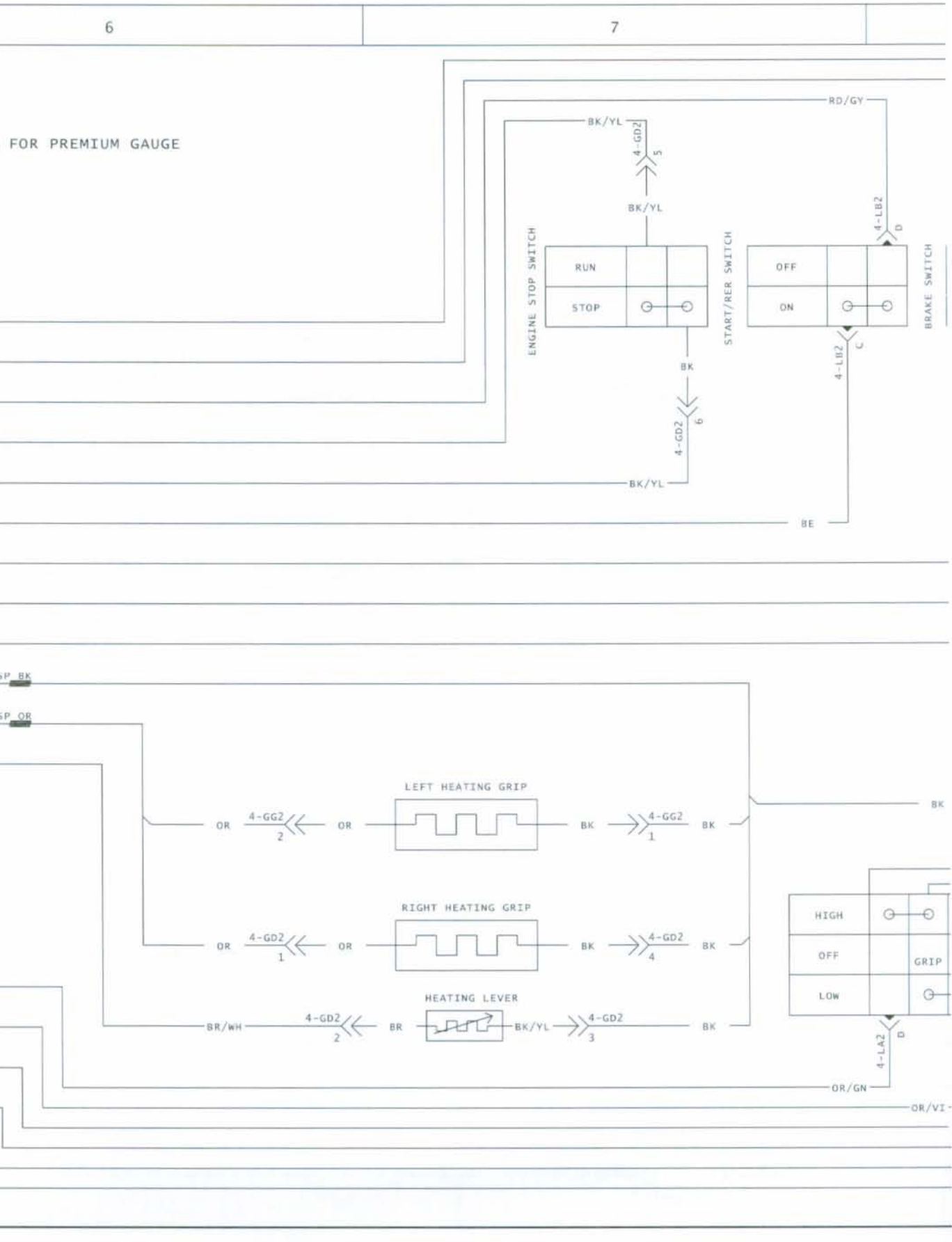

www.midwestmanuals.com

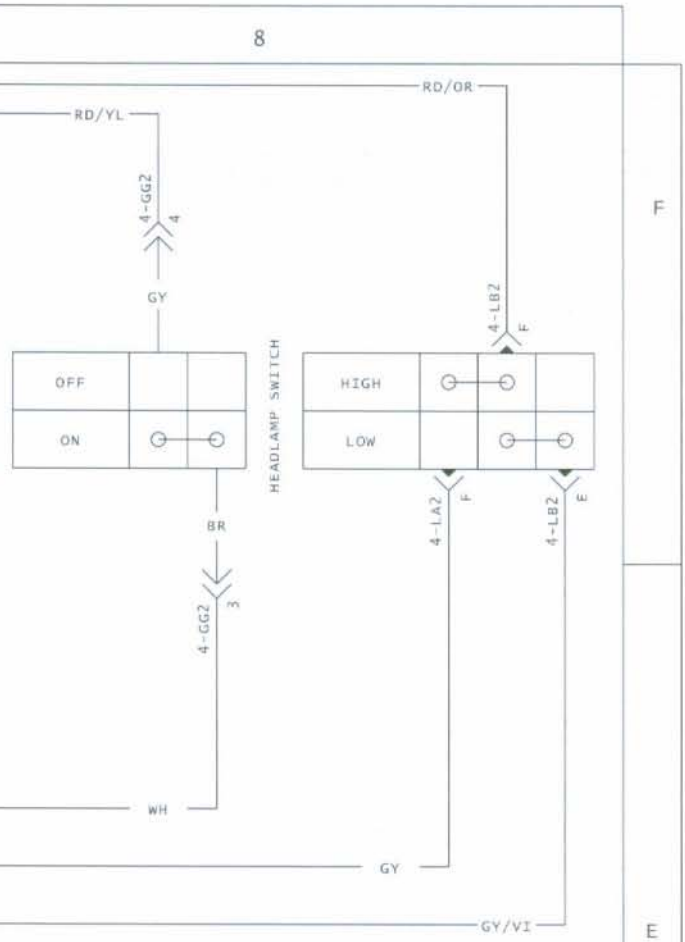

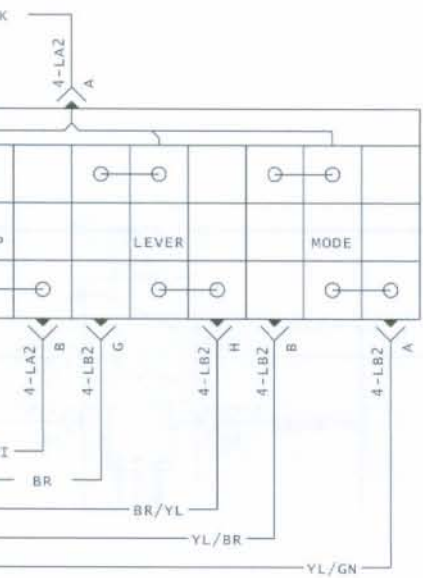

www.midwestmanuals.com

ELECTRIC START ONLY

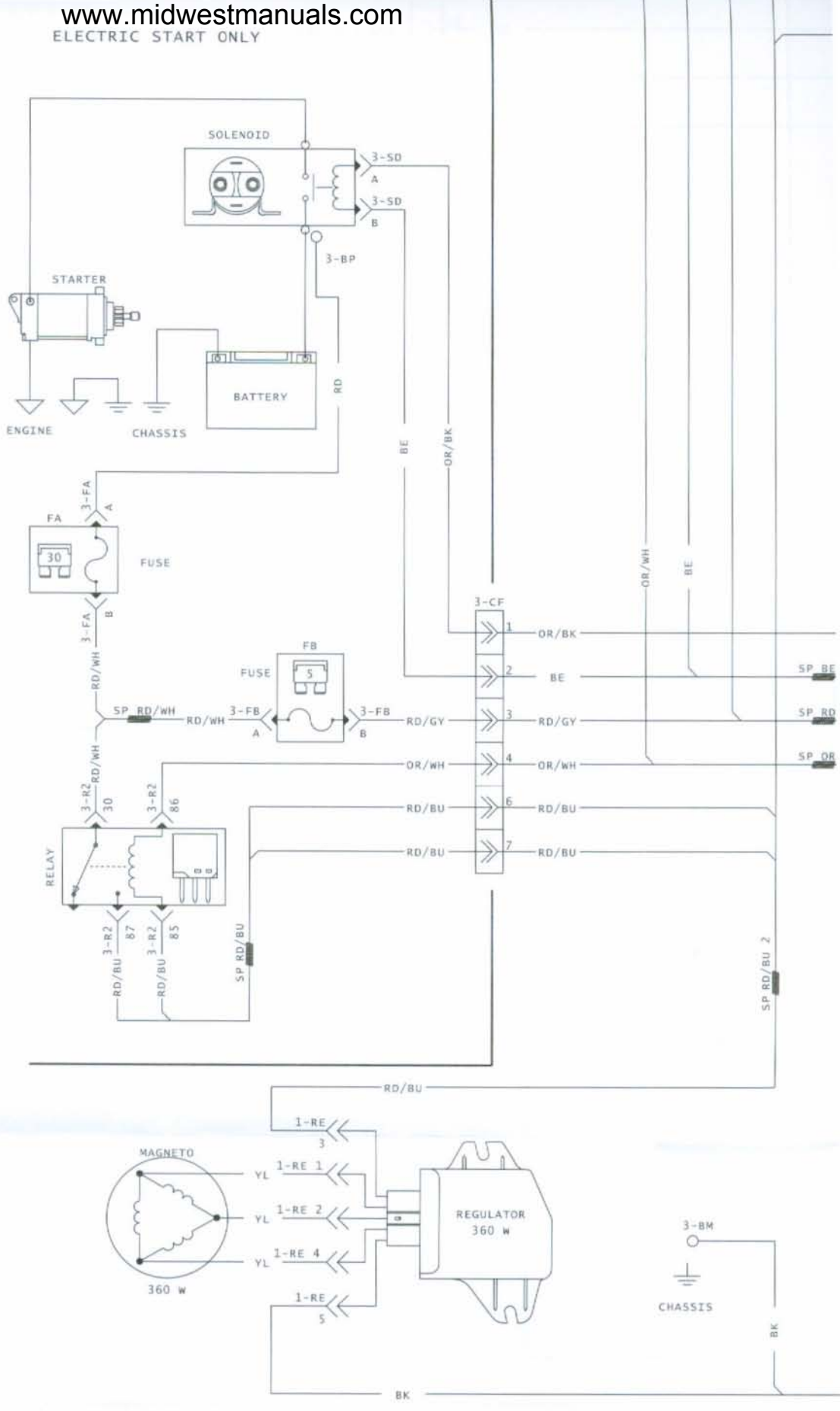

mmr2009-094-006

www.midwestmanuals.com

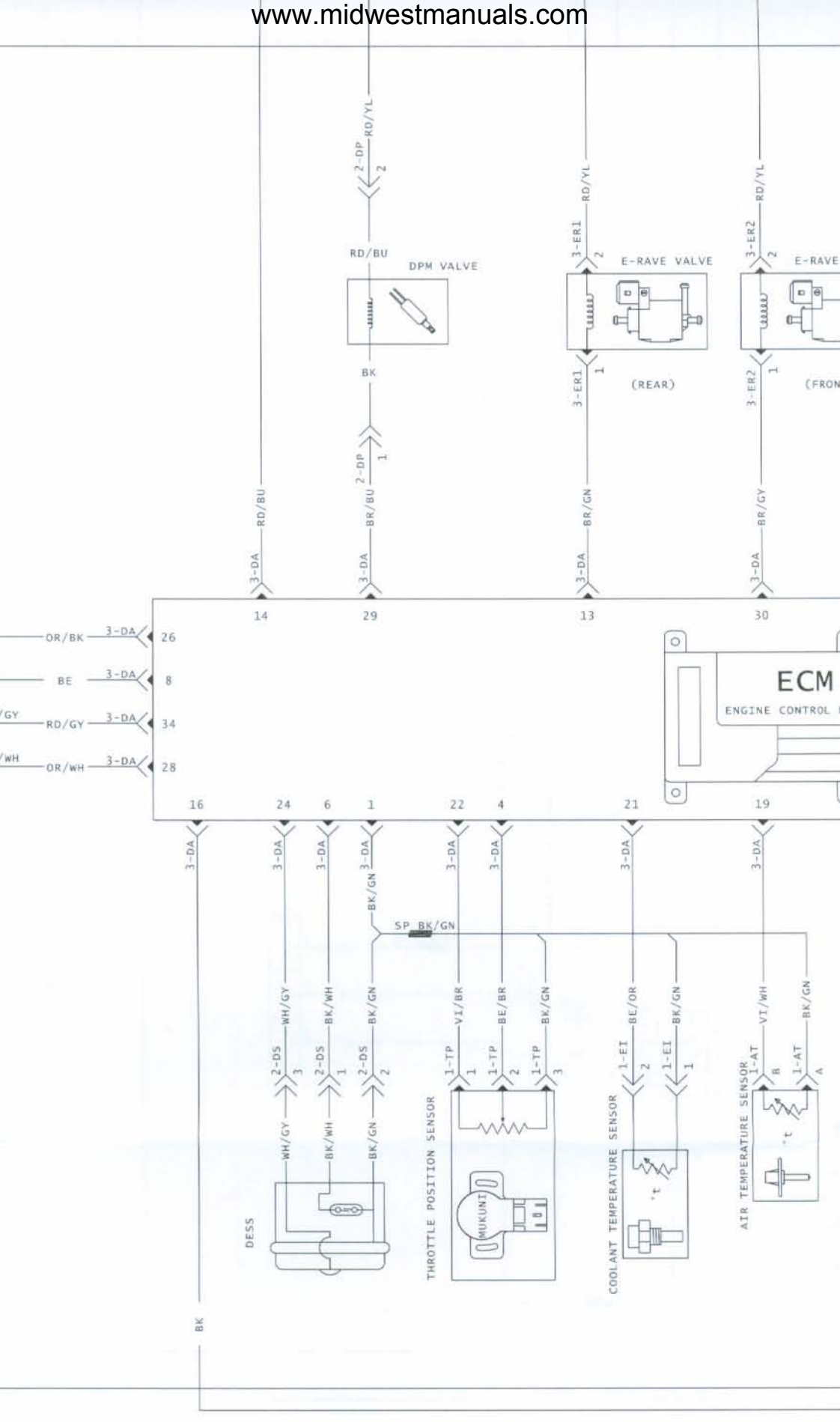

www.midwestmanuals.com

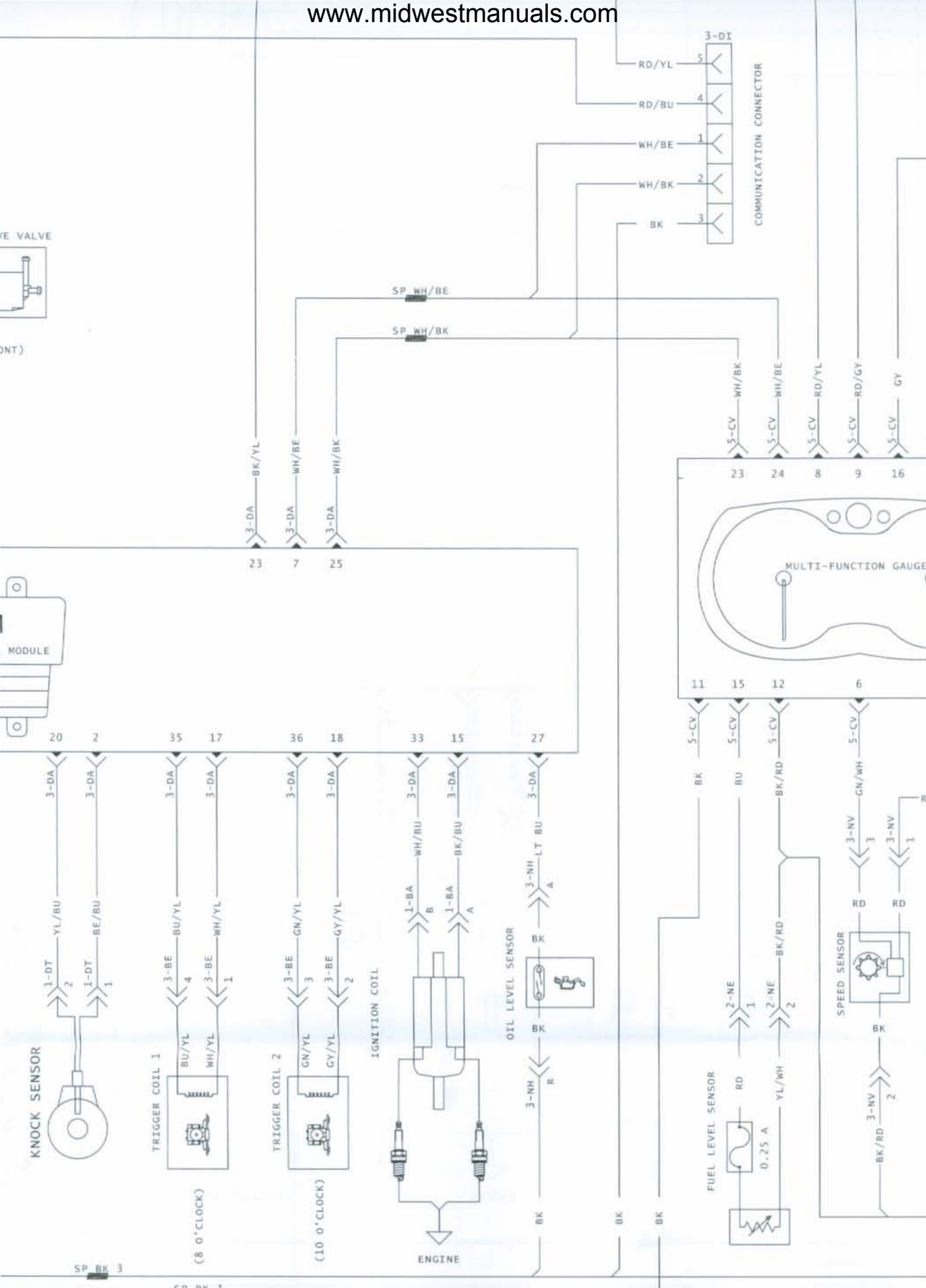

www.midwestmanuals.com

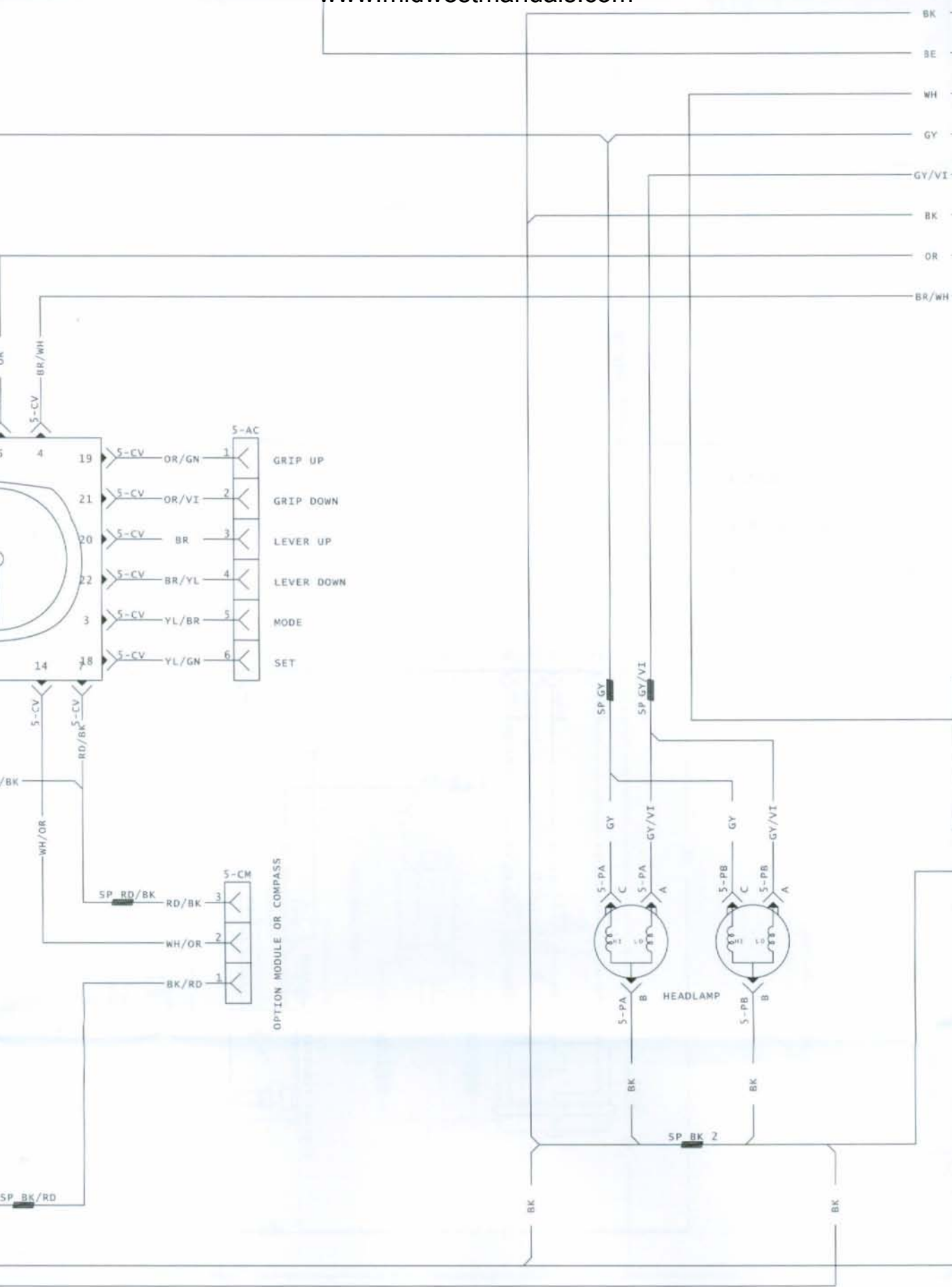

www.midwestmanuals.com

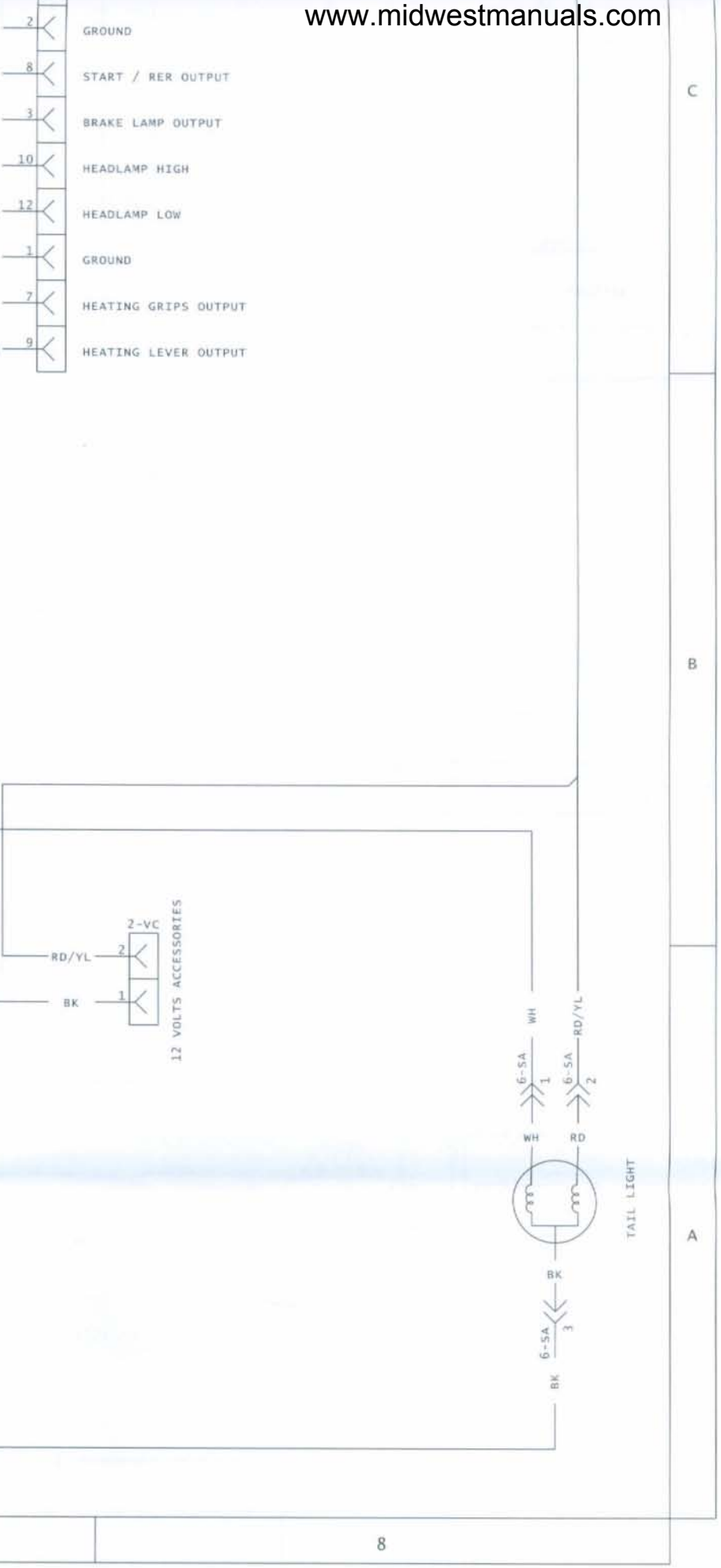

www.midwestmanuals.com

2009 REV-XP/XR 600 HO E-TEC

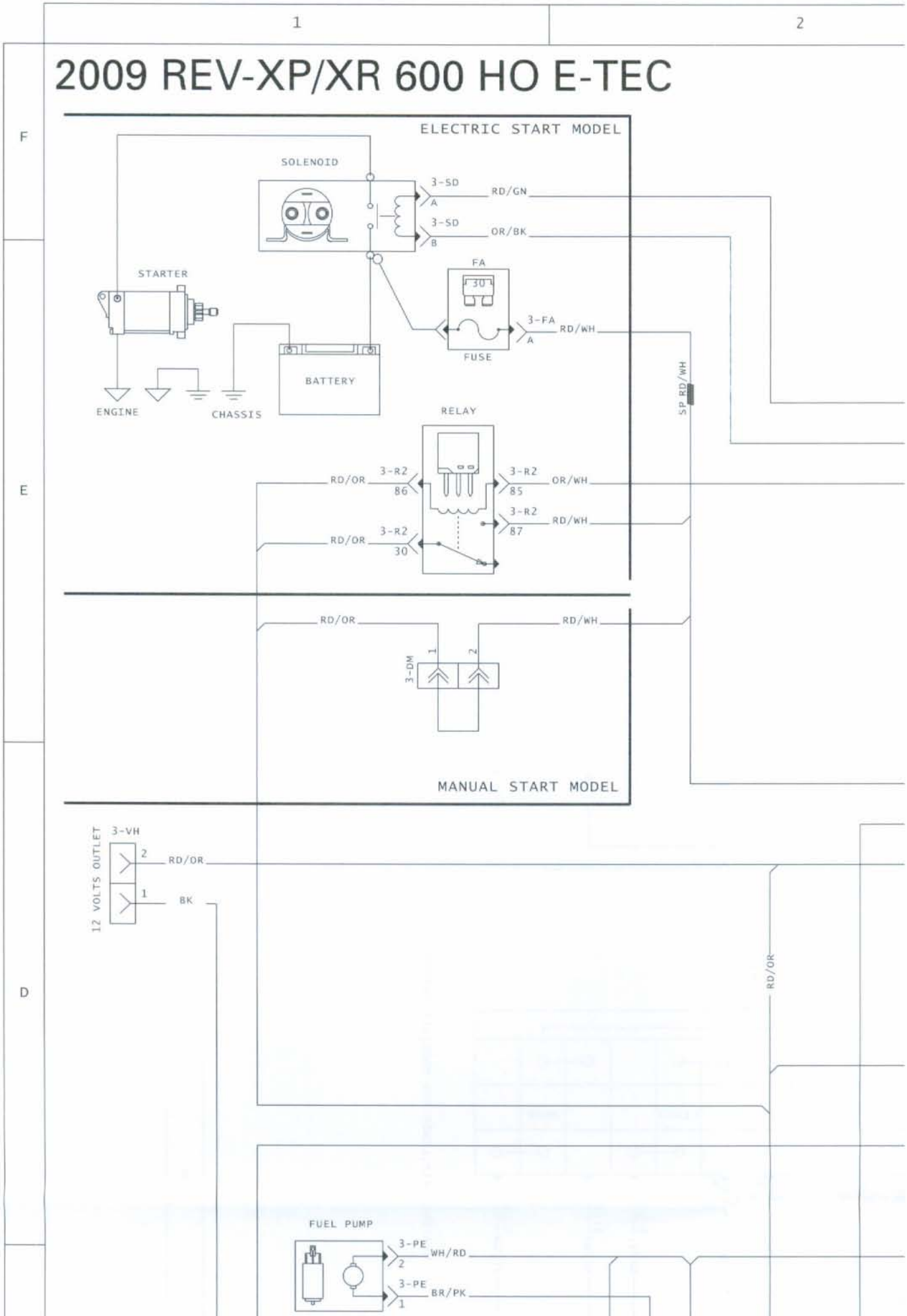

www.midwestmanuals.com

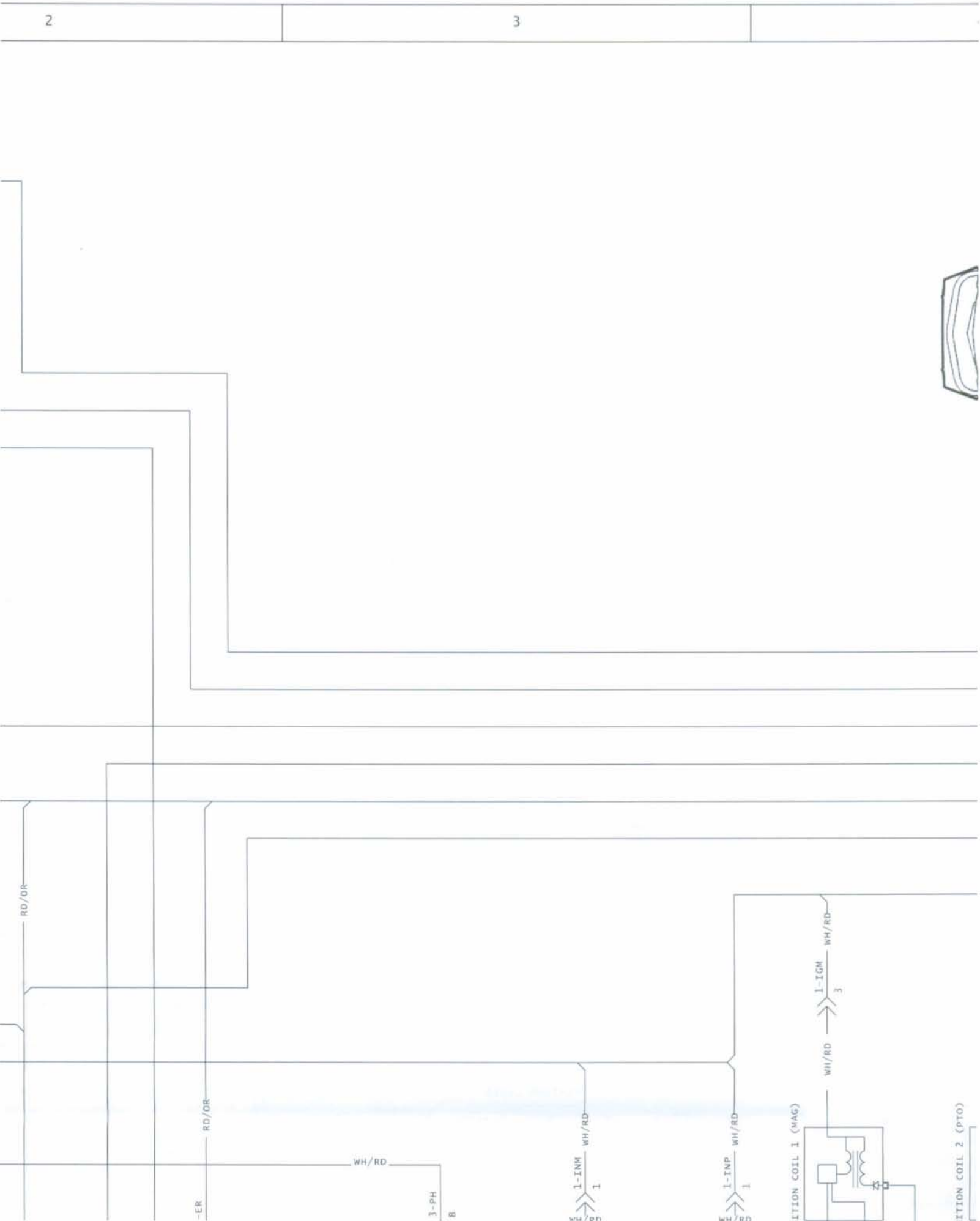

www.midwestmanuals.com

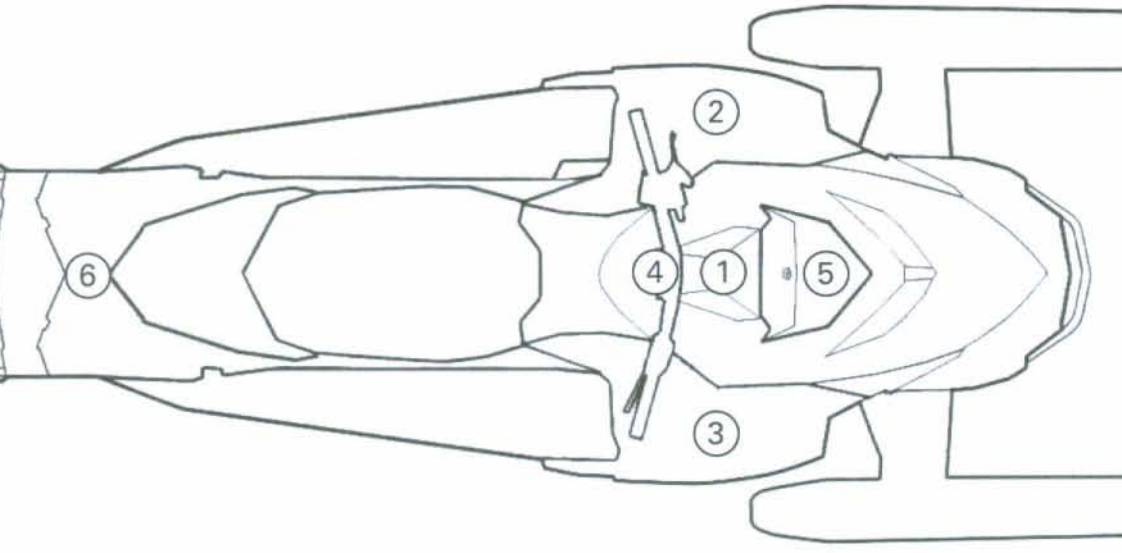

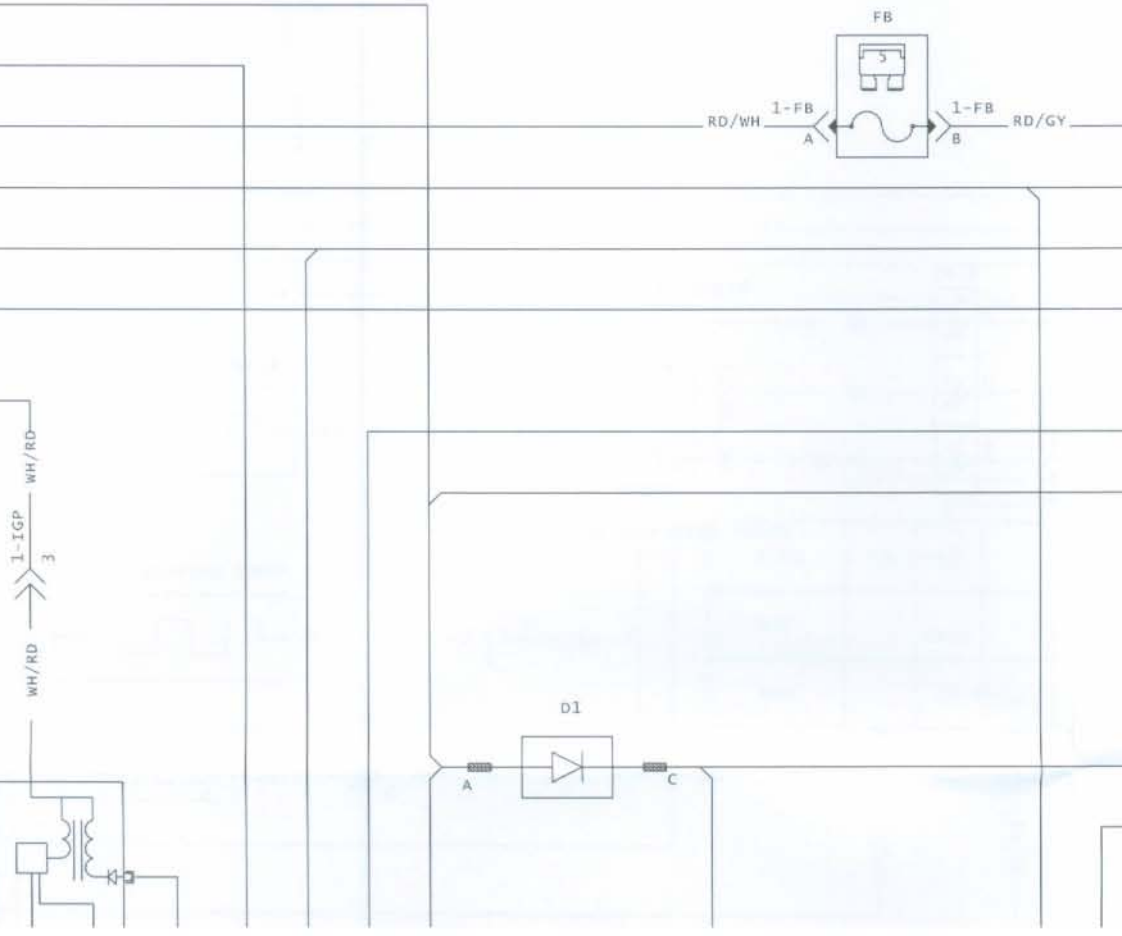

www.midwestmanuals.com

CONNECTOR LOCATION	
1	ENGINE RELATED CONNECTOR
2	LH SIDE PANEL
3	RH SIDE PANEL
4	HANDLEBAR AREA
5	BEHIND MULTI-FUNCTION GAUGE
6	REAR PART OF FRAME

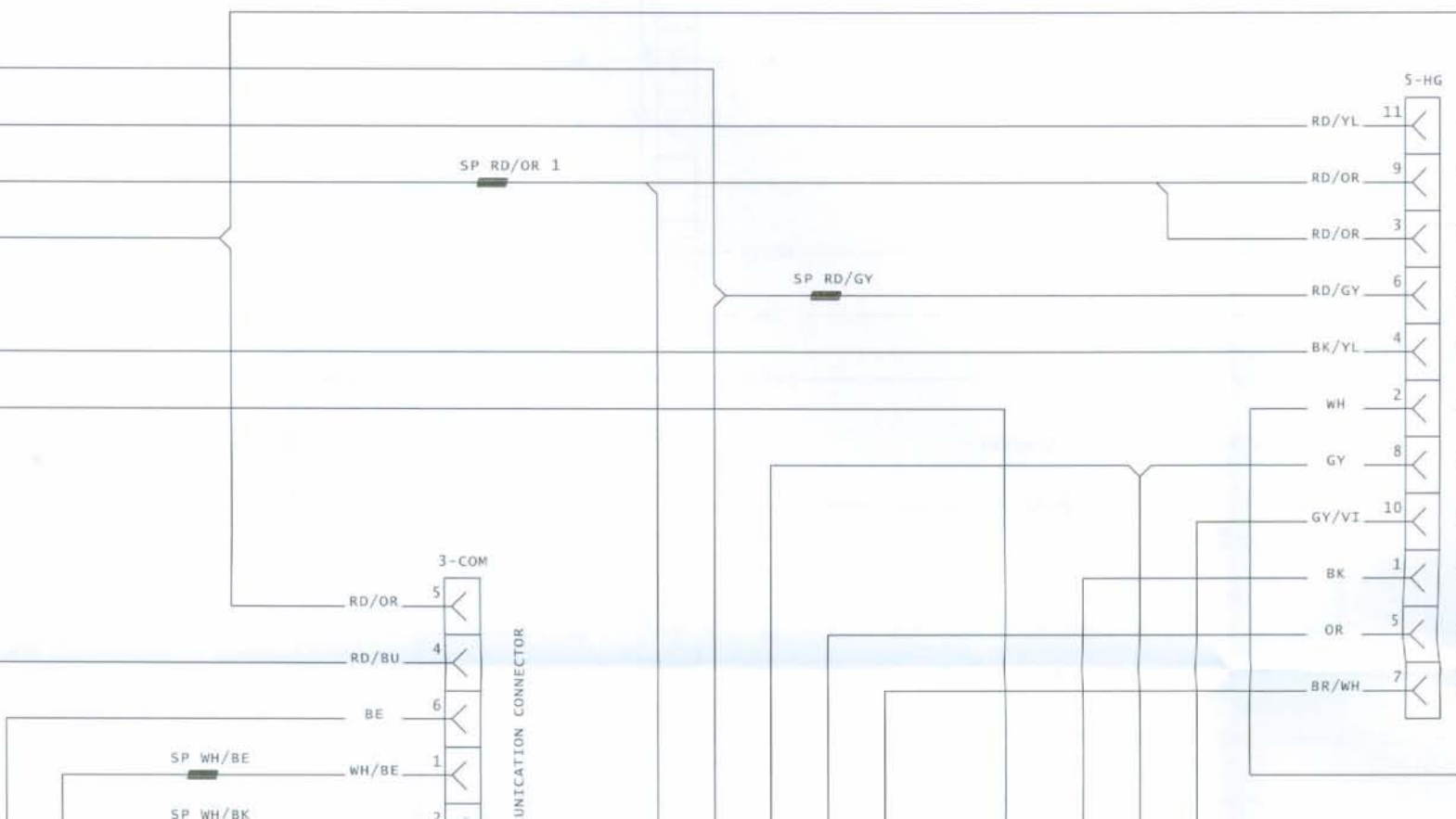

www.midwestmanuals.com

COLOR CODE	
BE	BEIGE
BK	BLACK
BR	BROWN
BU	BLUE
GN	GREEN
GY	GRAY
OR	ORANGE
PK	PINK
RD	RED
VI	VIOLET
YL	YELLOW
LT	LIGHT COLOR
SP	SPLICE

F

E

D

HEATING DEVICE POWER

HEADLAMP POWER

BRAKE SWITCH POWER

START/RER SWITCH POWER

ENGINE STOP SIGNAL

BRAKE LIGHT OUTPUT

HEADLAMP HIGH

HEADLAMP LOW

GROUND

HEATING GRIP OUTPUT

HEATING LEVER OUYPUT

WH

www.midwestmanuals.com

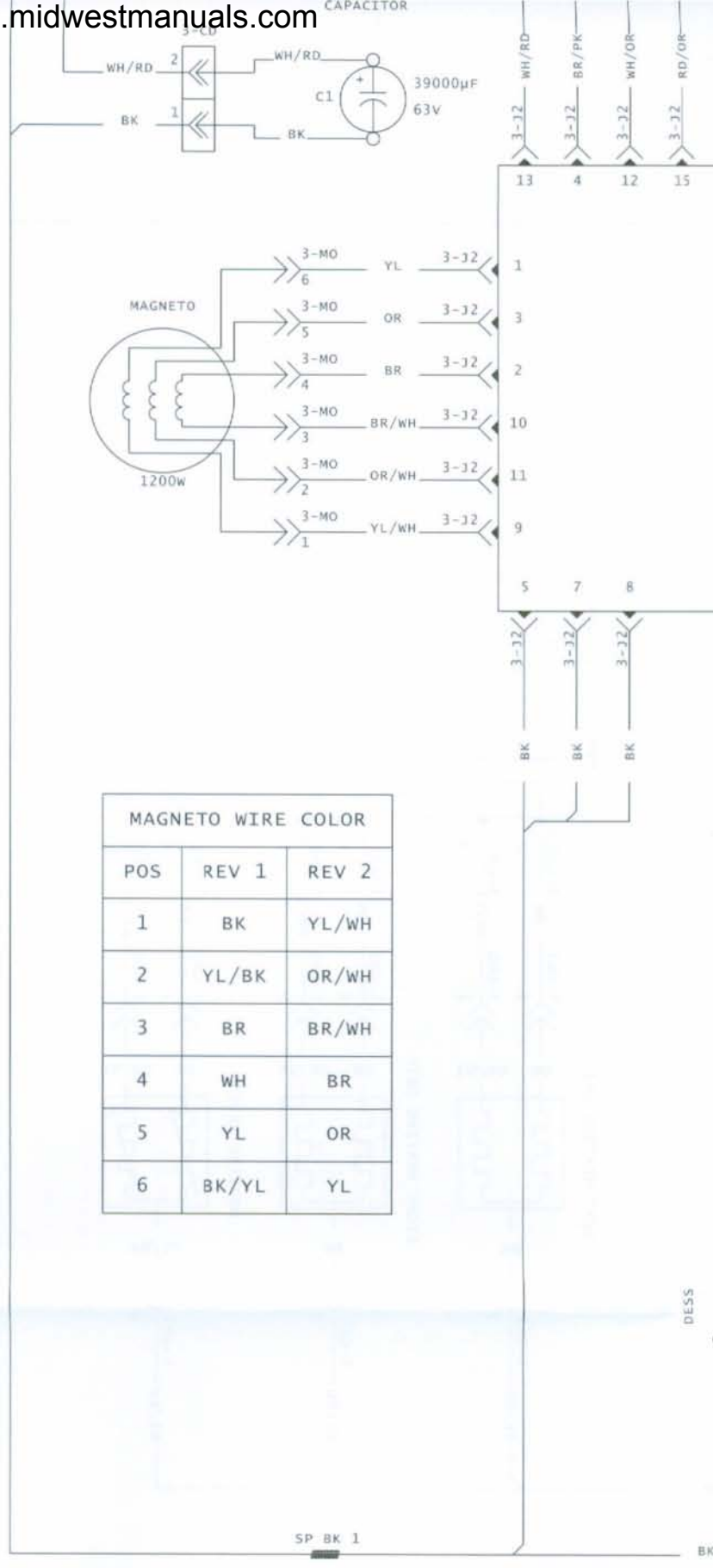

MAGNETO WIRE COLOR		
POS	REV 1	REV 2
1	BK	YL/WH
2	YL/BK	OR/WH
3	BR	BR/WH
4	WH	BR
5	YL	OR
6	BK/YL	YL

www.midwestmanuals.com

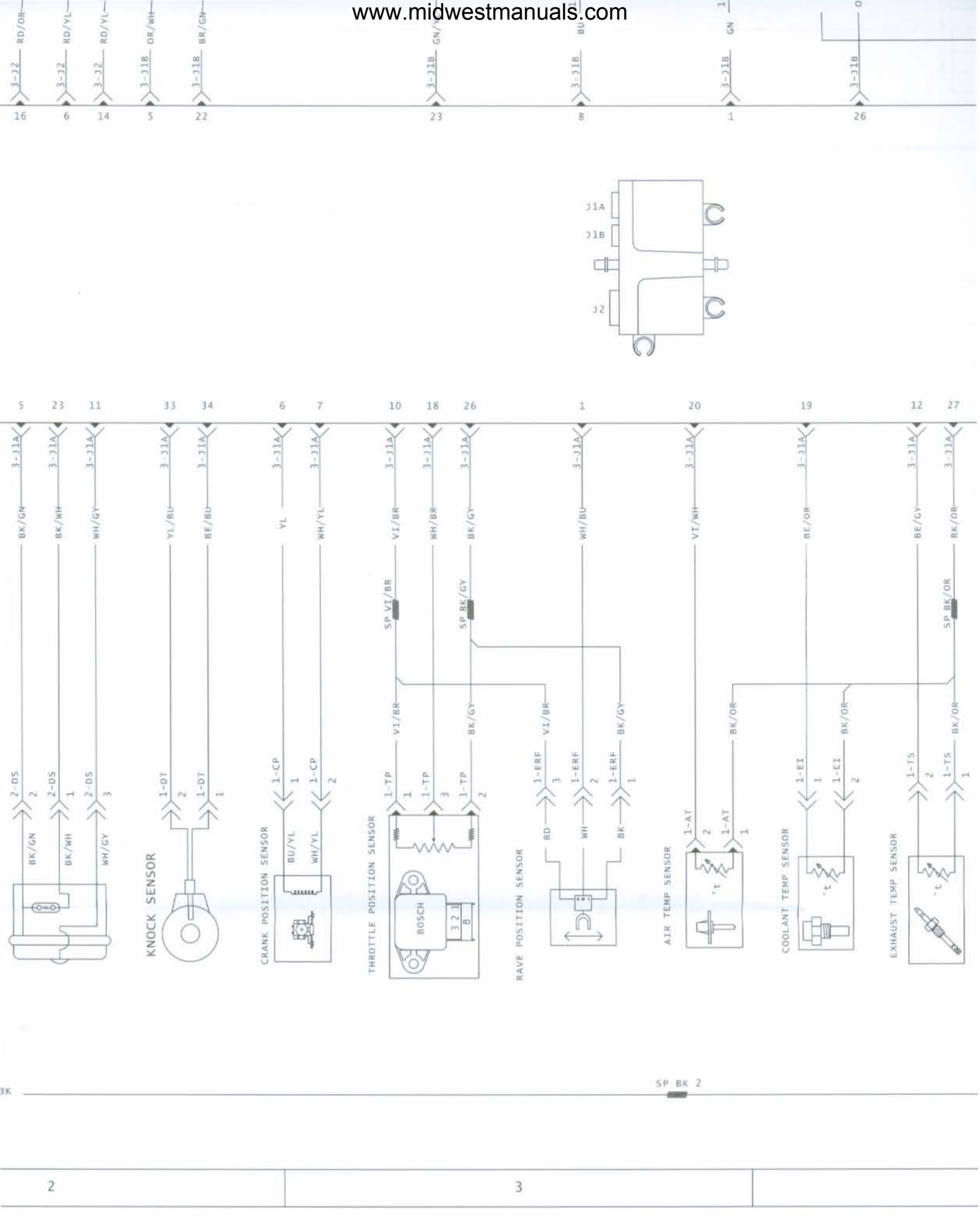

www.midwestmanuals.com

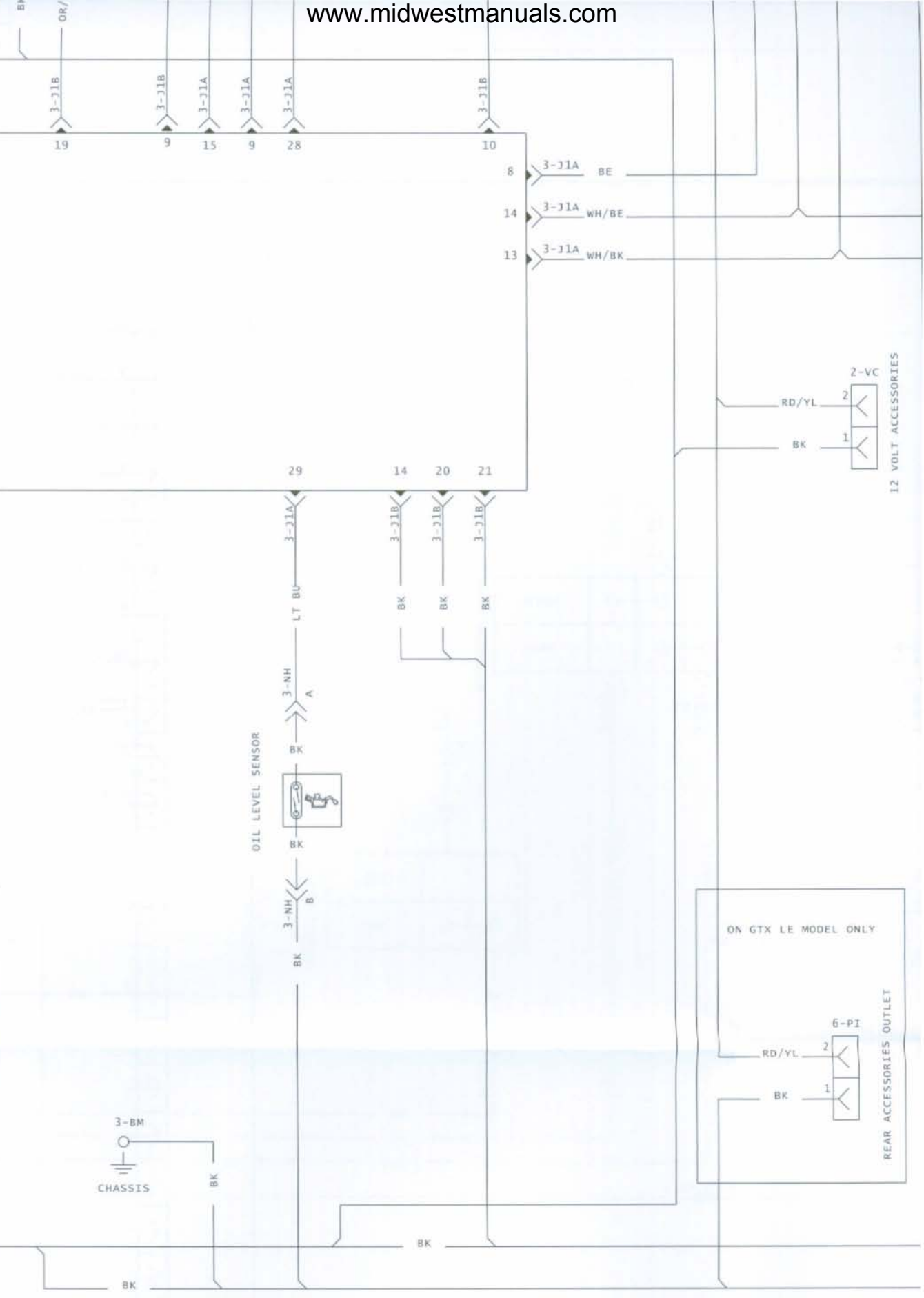

www.midwestmanuals.com

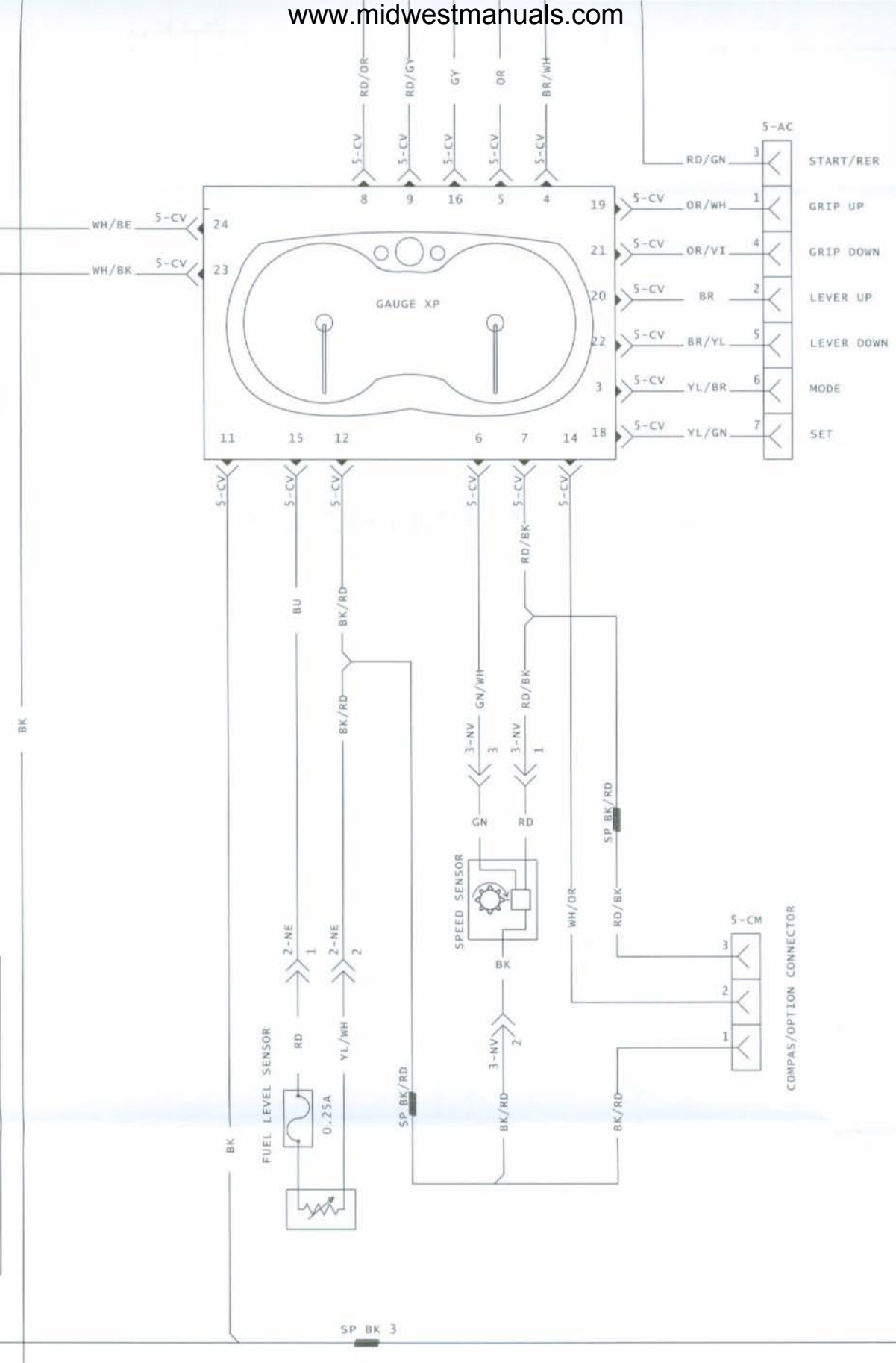

www.midwestmanuals.com

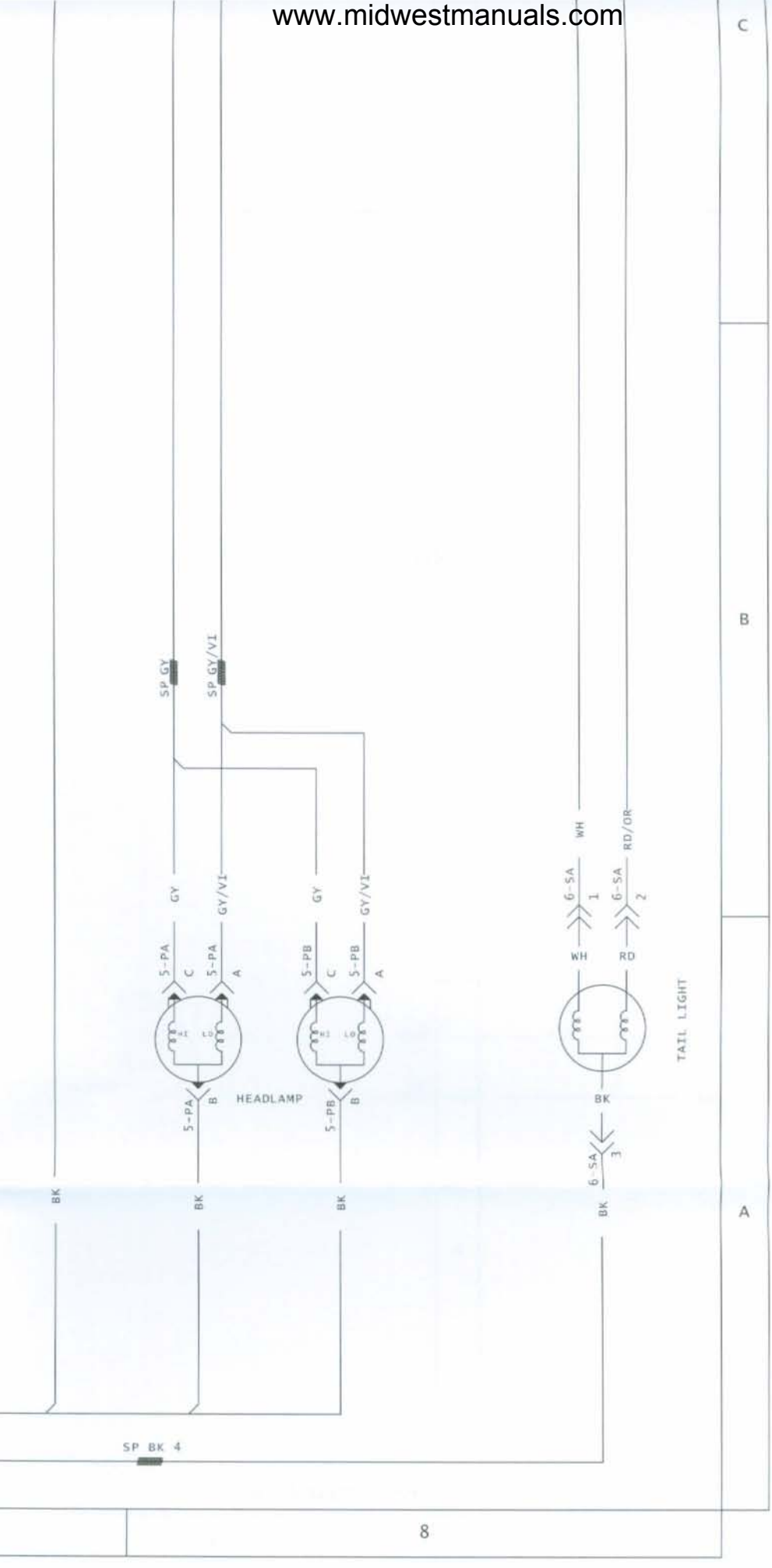

www.midwestmanuals.com

2009 REV-XP/XR 600 HO E

F

E

D

PASSENGER SEAT HARNESS

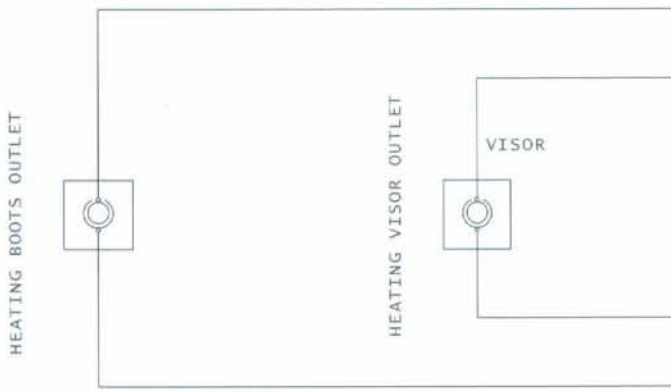

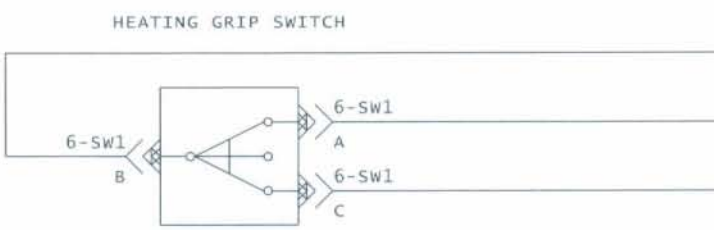

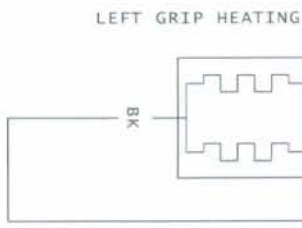

www.midwestmanuals.com

-TEC

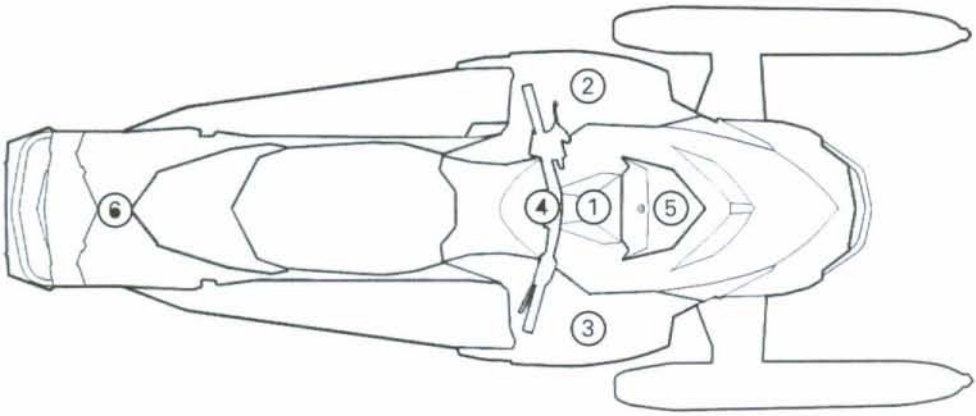

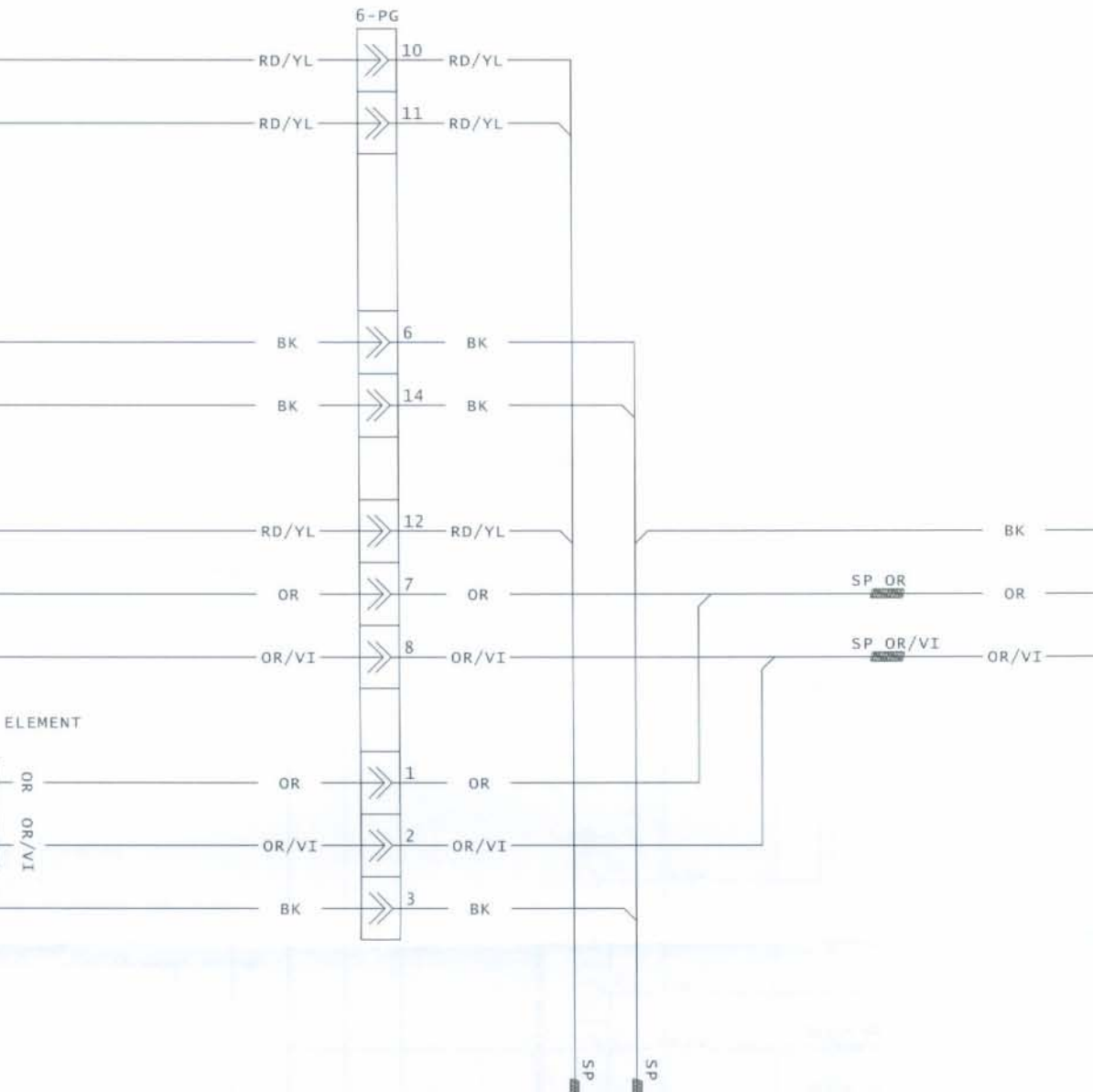

www.midwestmanuals.com

CONNECTOR LOCATION	
1	ENGINE RELATED CONNECTORS
2	LH SIDE PANEL
3	RH SIDE PANEL
4	HANDLEBAR AREA
5	BEHIND MULTI-FUNCTION GAUGE
6	REAR PART OF FRAME

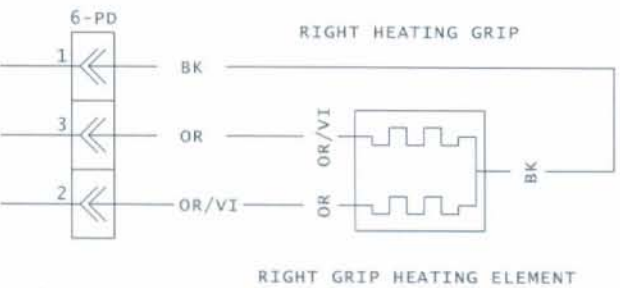

RIGHT GRIP HEATING ELEMENT

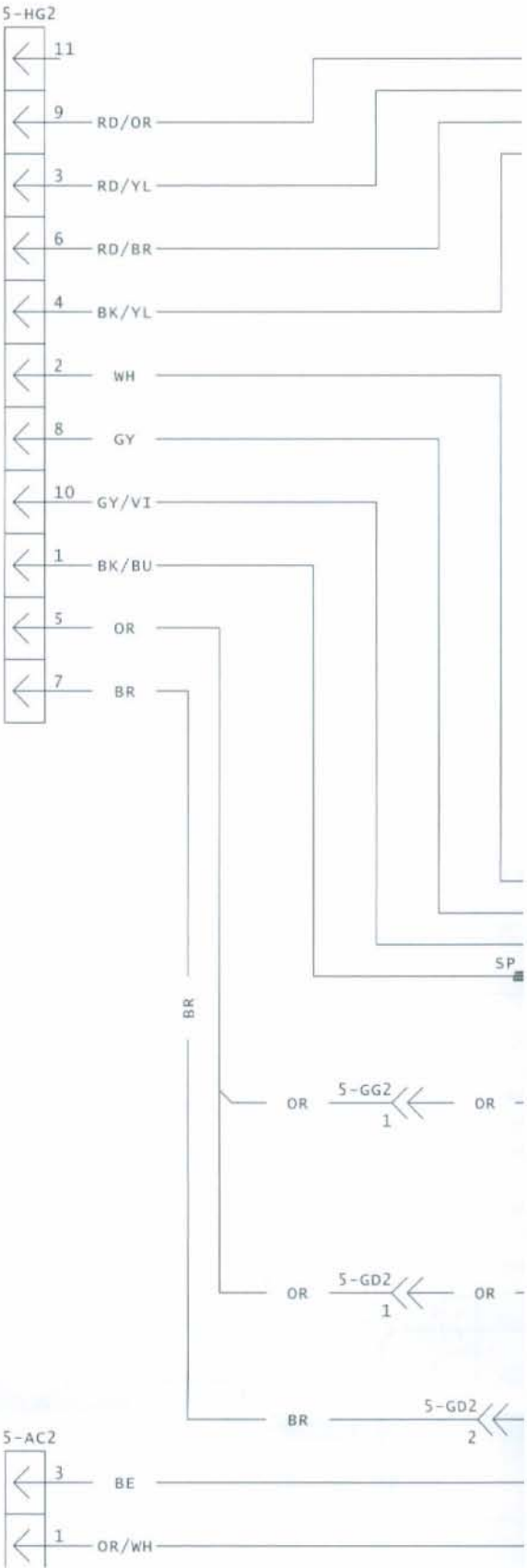

www.midwestmanuals.com

PREMIUM STEERING HARNESS

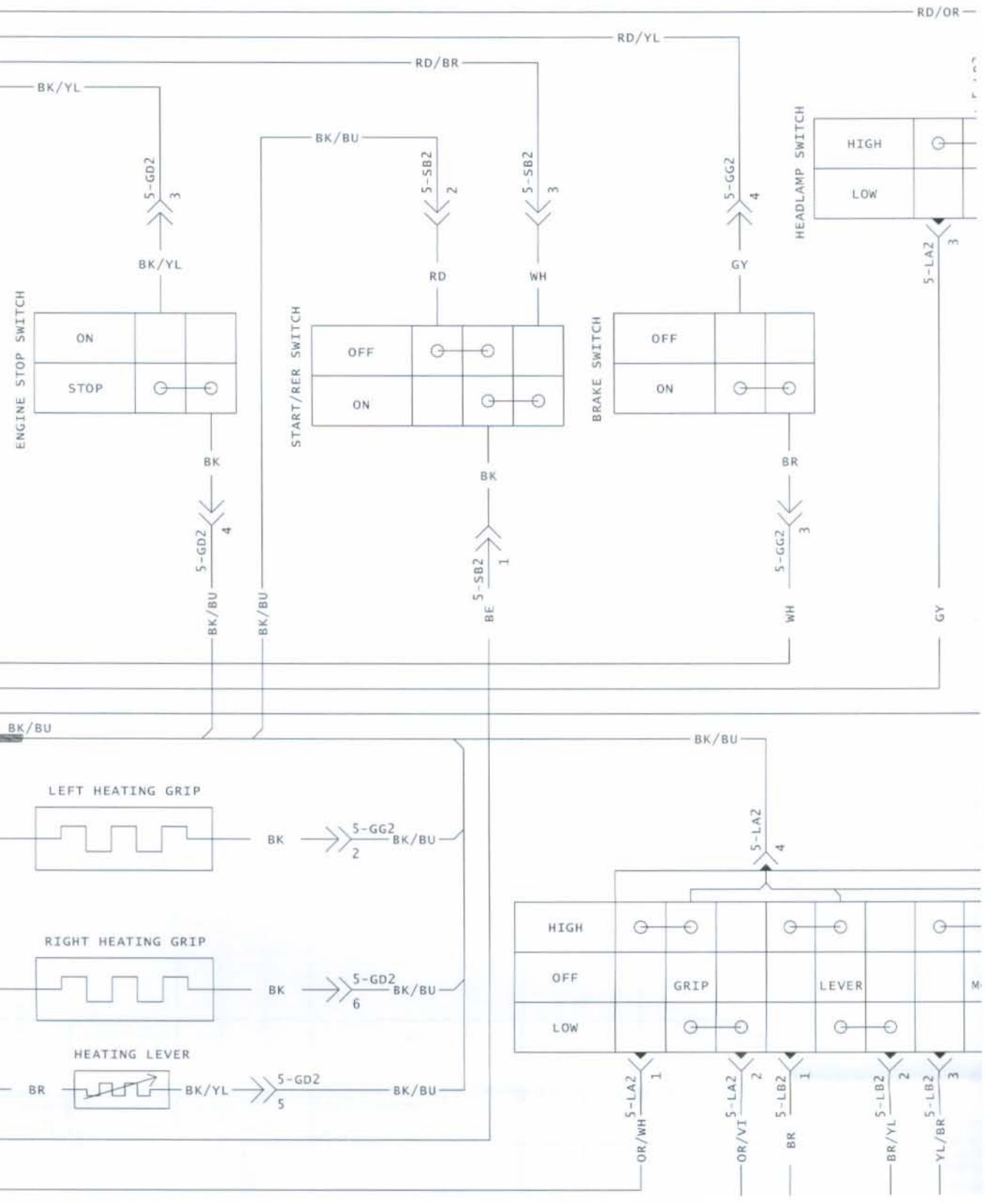

www.midwestmanuals.com

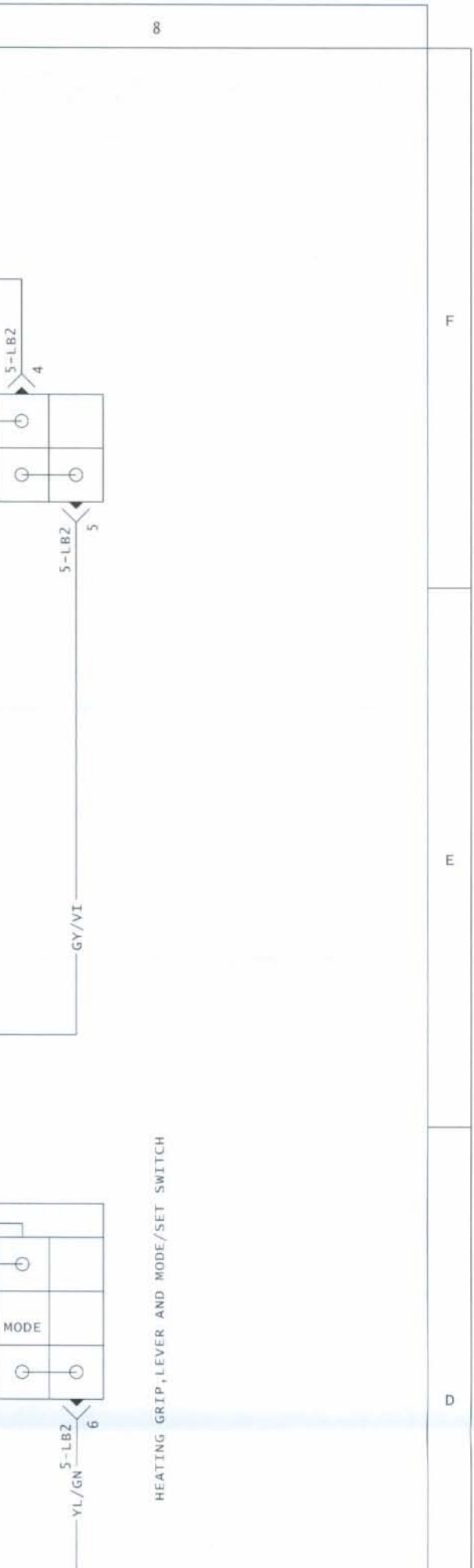

www.midwestmanuals.com

C

B

A

ACC

FROM MAIN HARNESS

www.midwestmanuals.com



CESSORIES OUTLET HARNESS

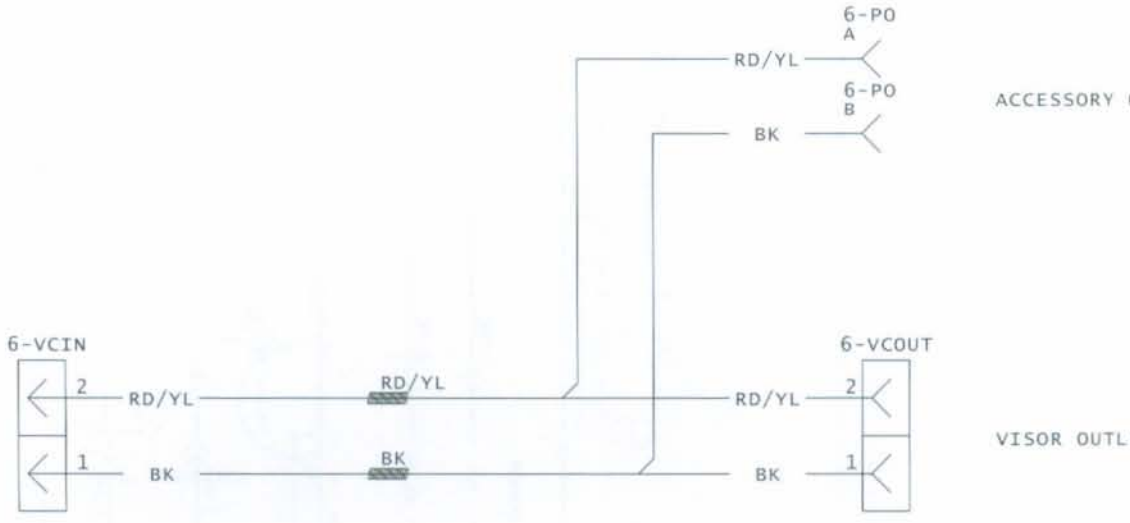

www.midwestmanuals.com

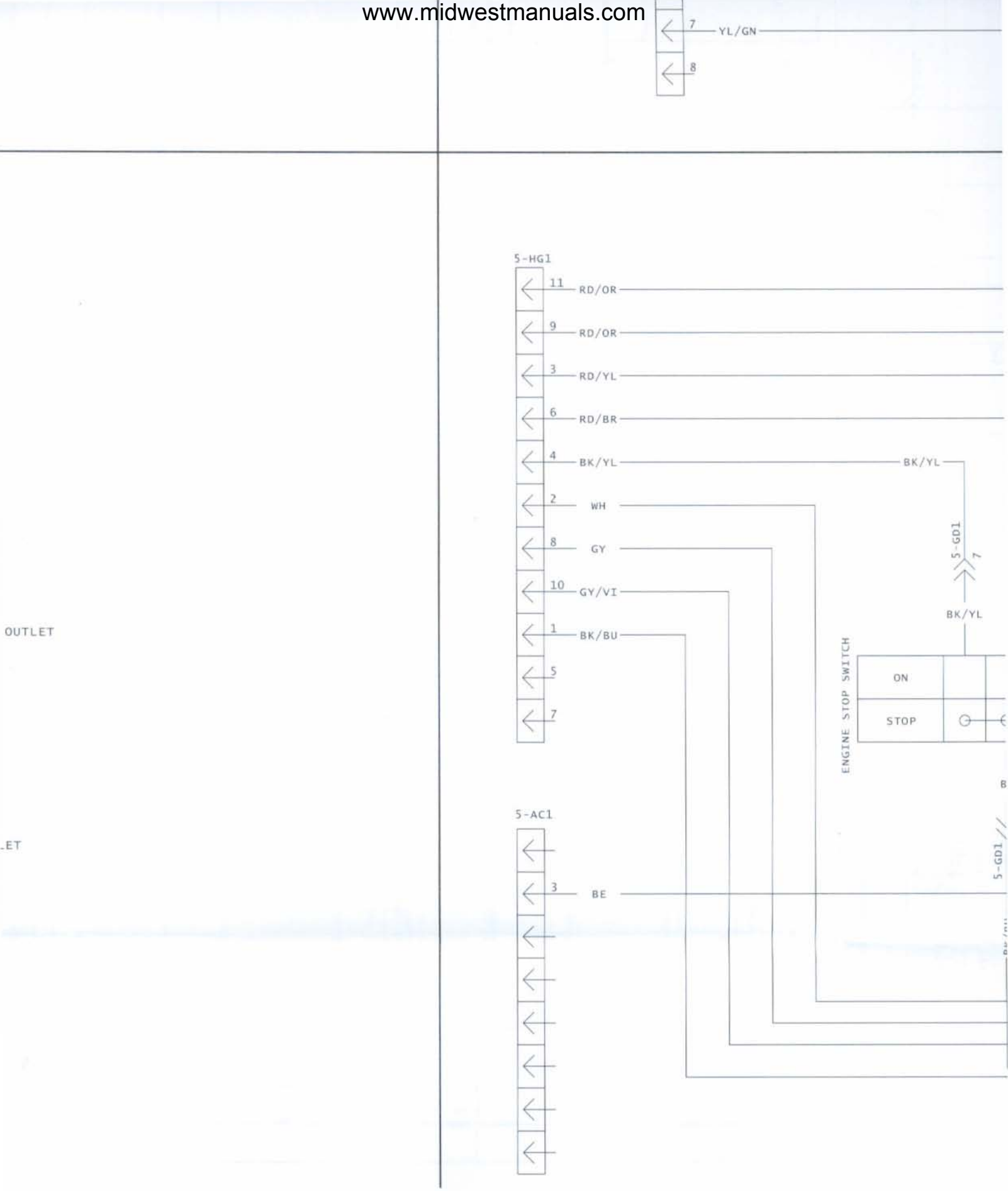

OUTLET

LET

www.midwestmanuals.com

STANDARD STEERING HARNESS

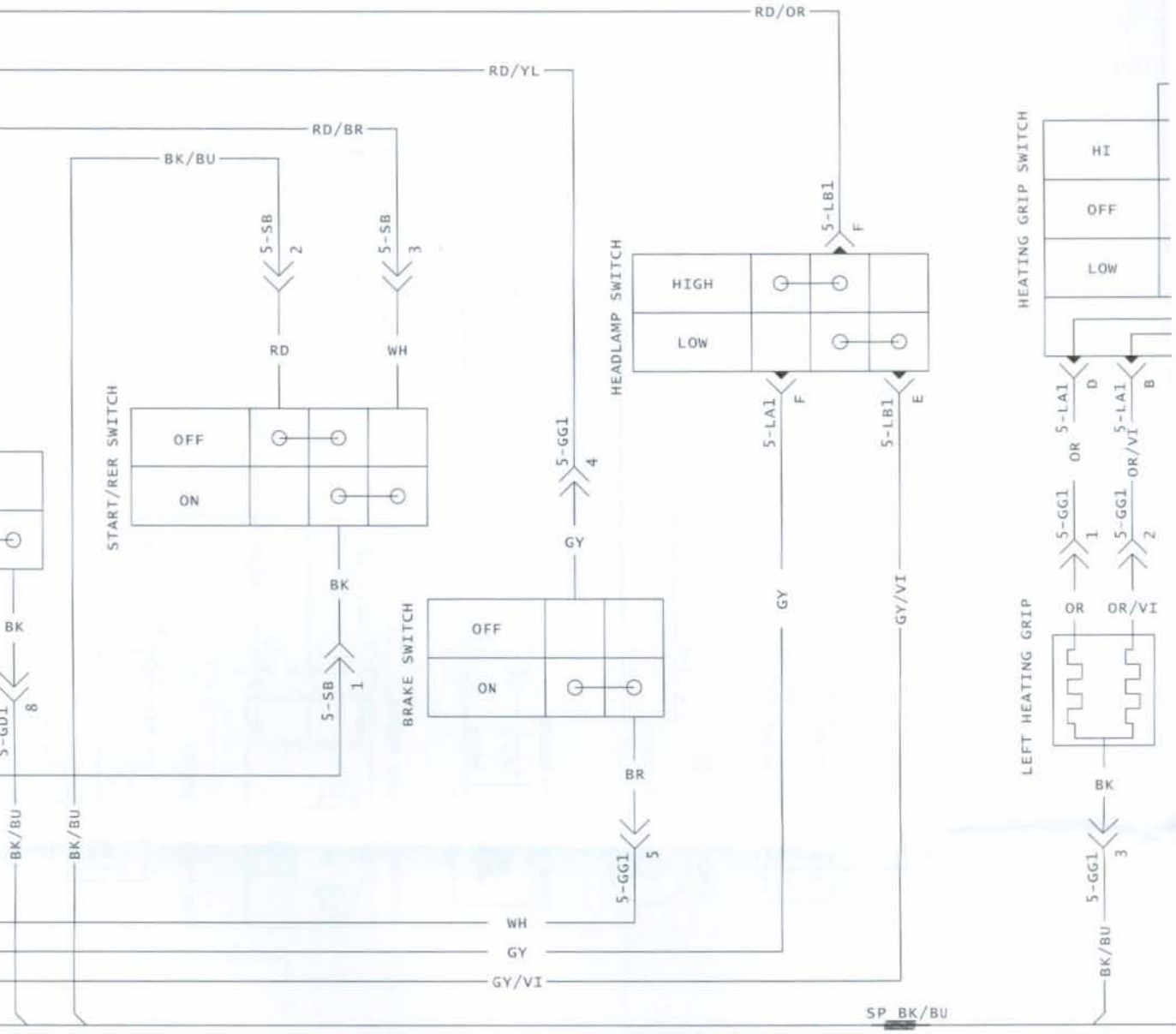

www.midwestmanuals.com

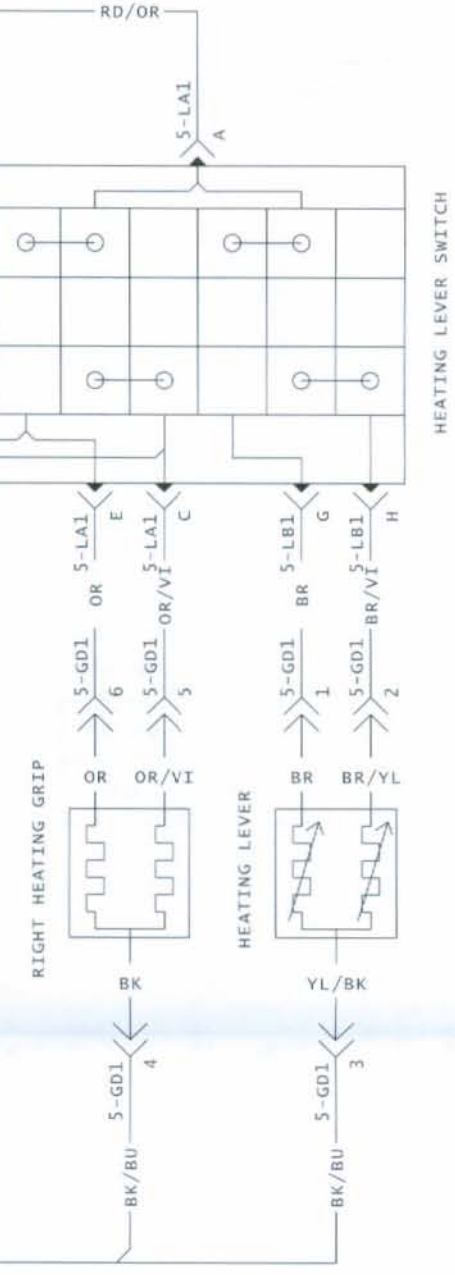

www.midwestmanuals.com

2009 REV-XP 500SS/600



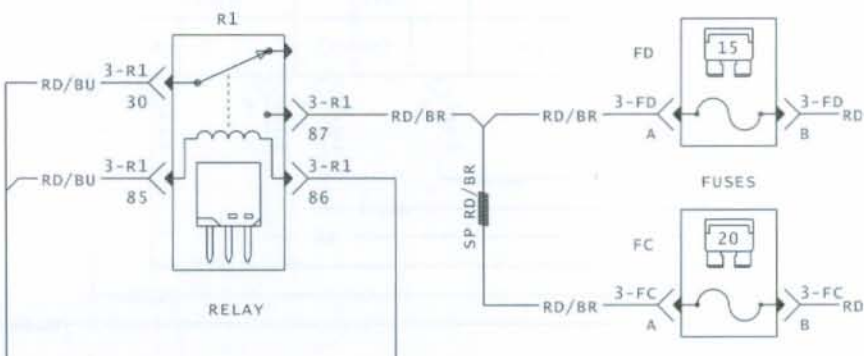

www.midwestmanuals.com

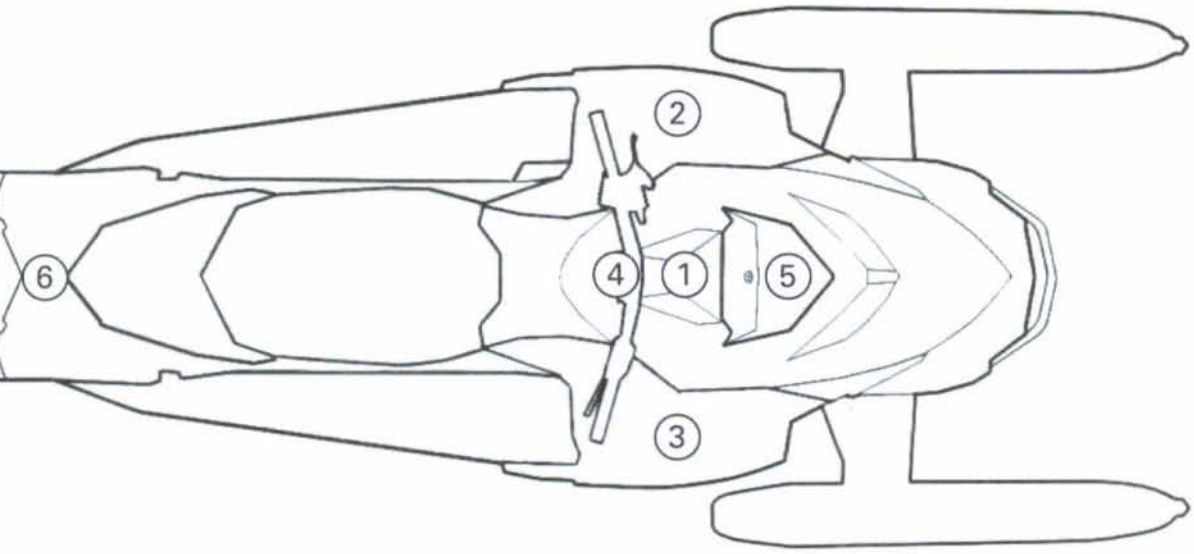

D/OR

D/YL

www.midwestmanuals.com

CONNECTOR LOCATION	
1	ENGINE RELATED CONNECTORS
2	LH SIDE PANEL
3	RH SIDE PANEL
4	HANDLEBAR AREA
5	BEHIND MULTI-FUNCTION GAUGE
6	REAR PART OF FRAME

COLOR CODE	
BE	BEIGE
BK	BLACK
BR	BROWN
BU	BLUE
GN	GREEN
GY	GRAY
OR	ORANGE
PK	PINK
RD	RED
VI	VIOLET
YL	YELLOW
LT	LIGHT COLOR
SP	SPLICE

STEERING HARNESS

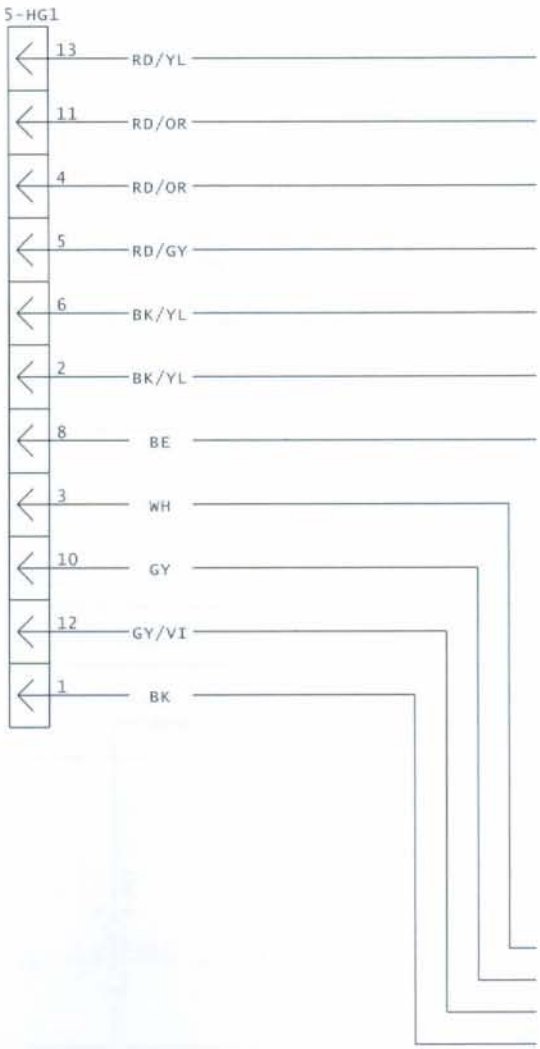

www.midwestmanuals.com

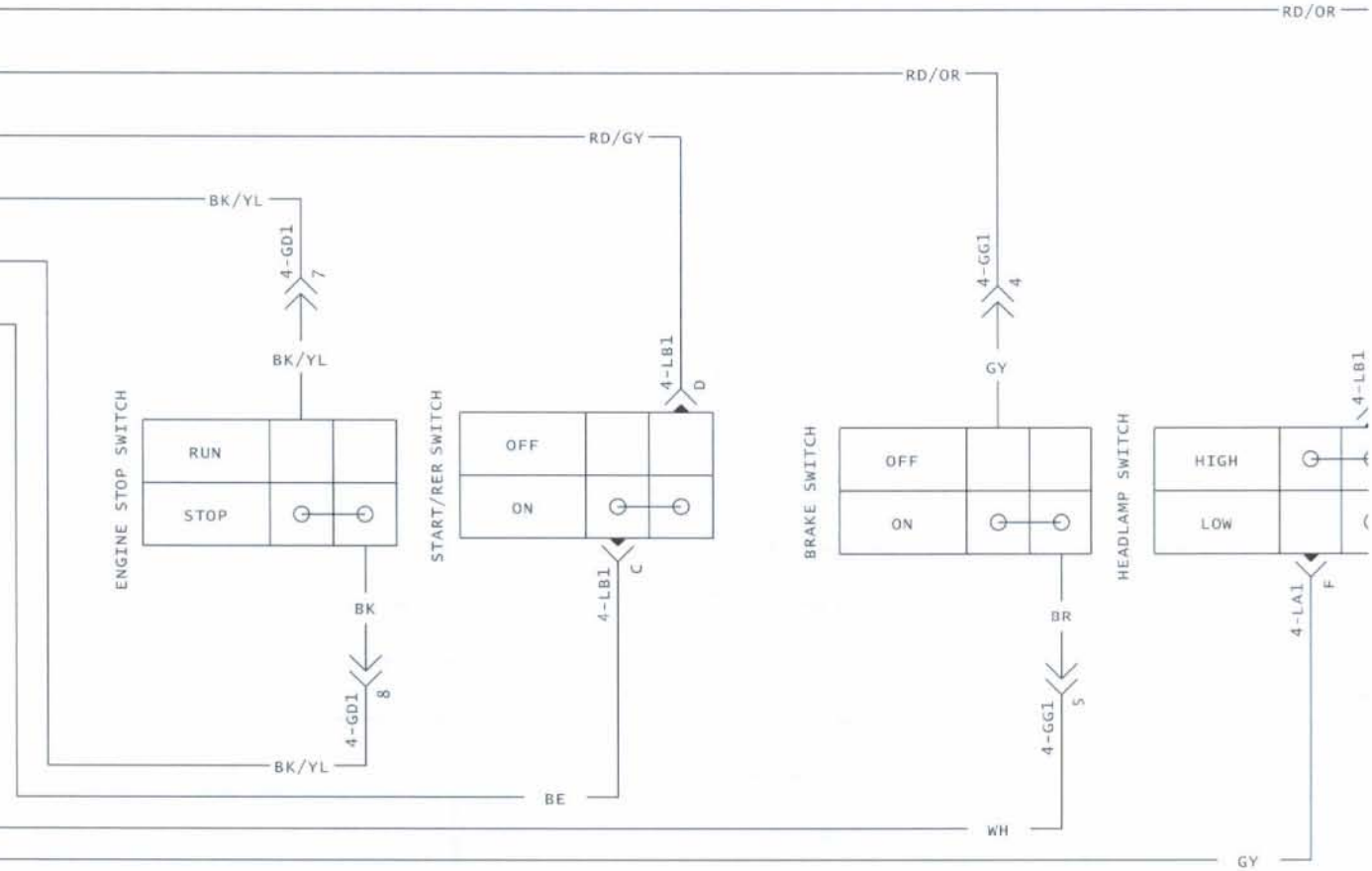

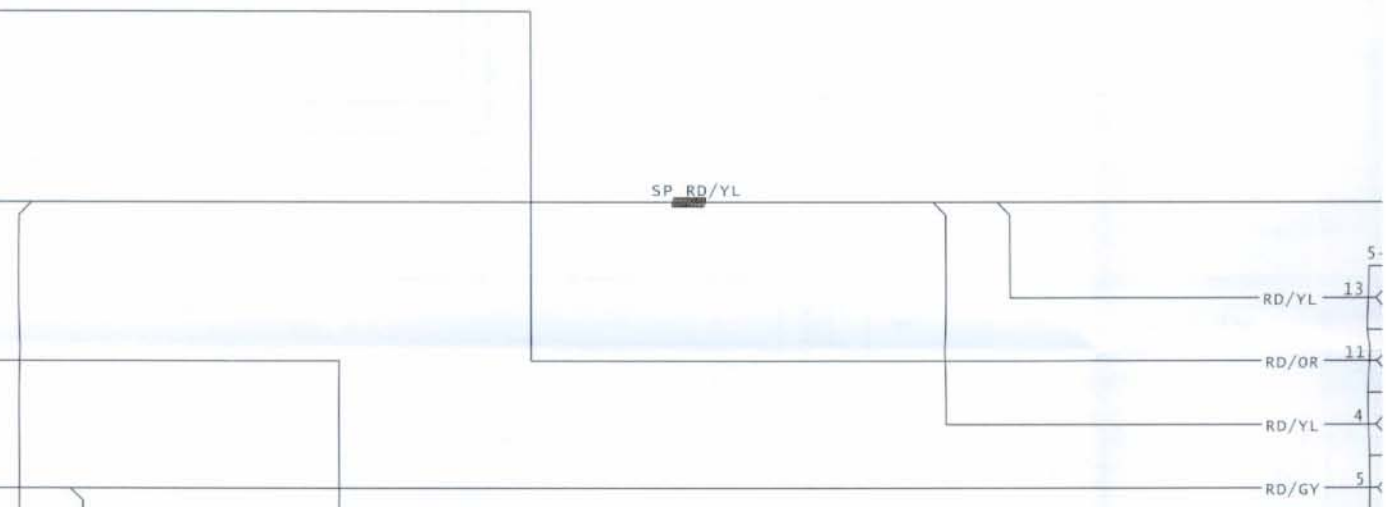

www.midwestmanuals.com

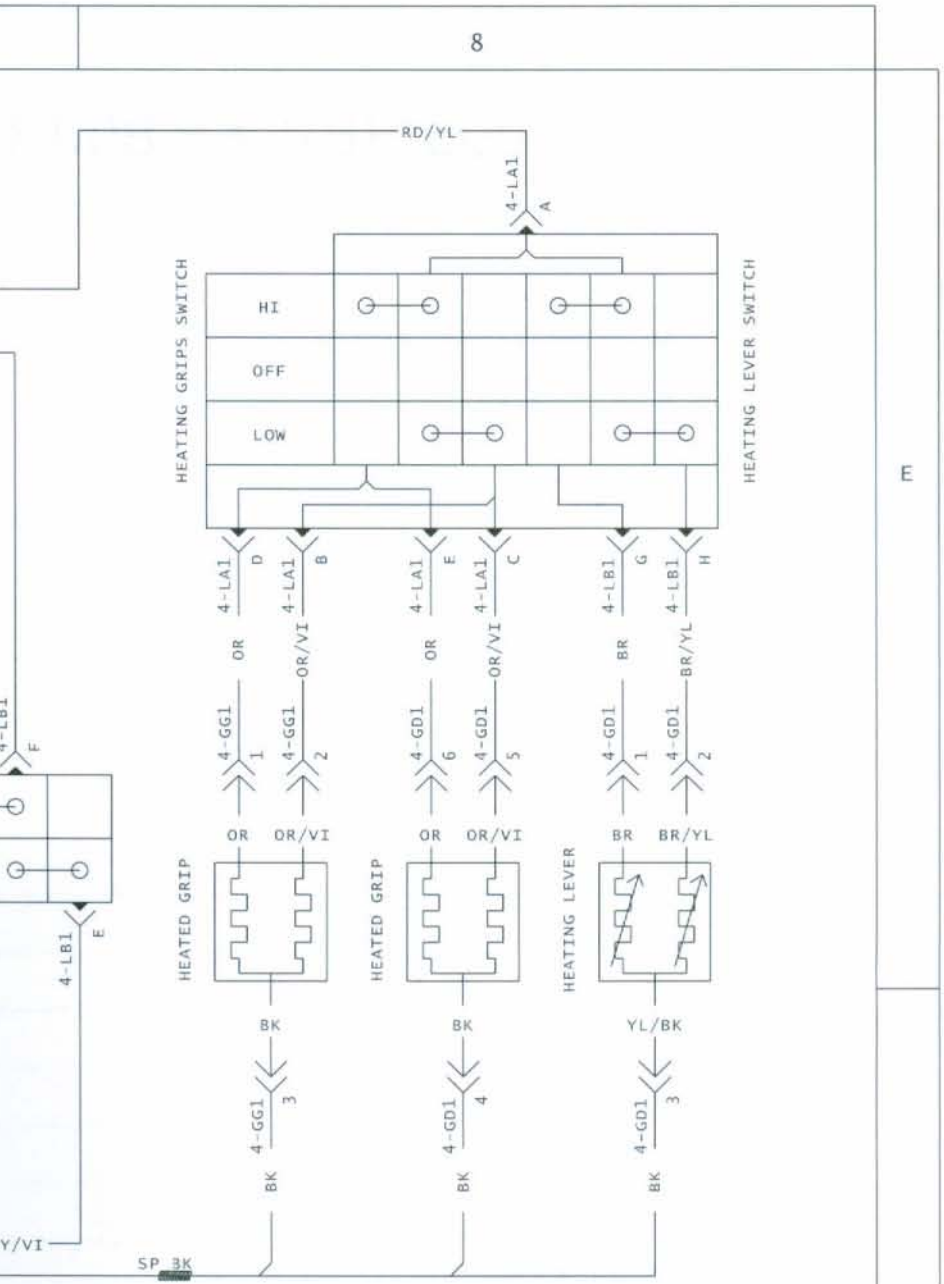

5-HG

POWER FOR HEATING ELEMENTS

POWER FOR HEADLAMP

POWER FOR BRAKE SWITCH

POWER FOR START / RER SWITCH

www.midwestmanuals.com

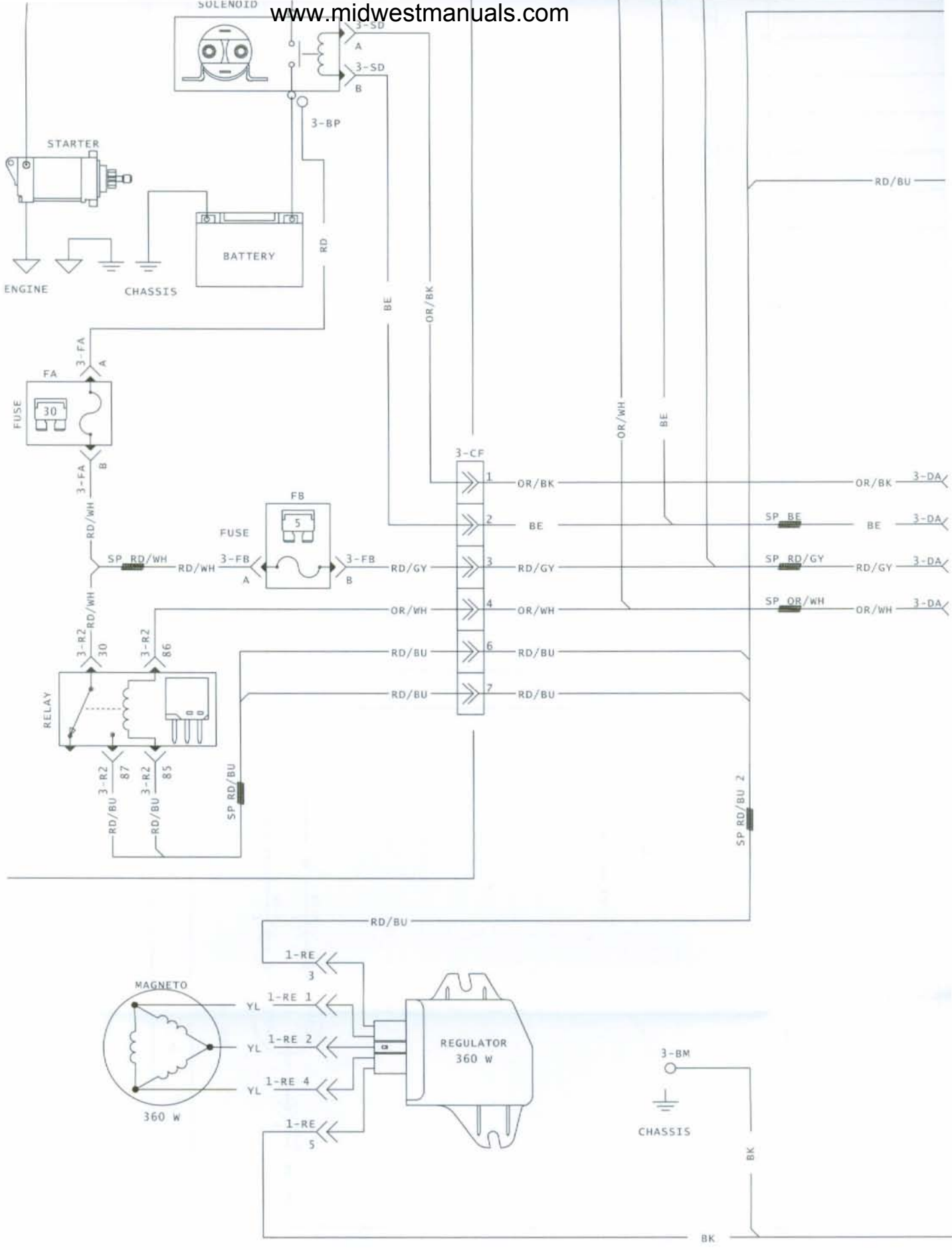

mmr2009-094-005

B

A

1

2

www.midwestmanuals.com

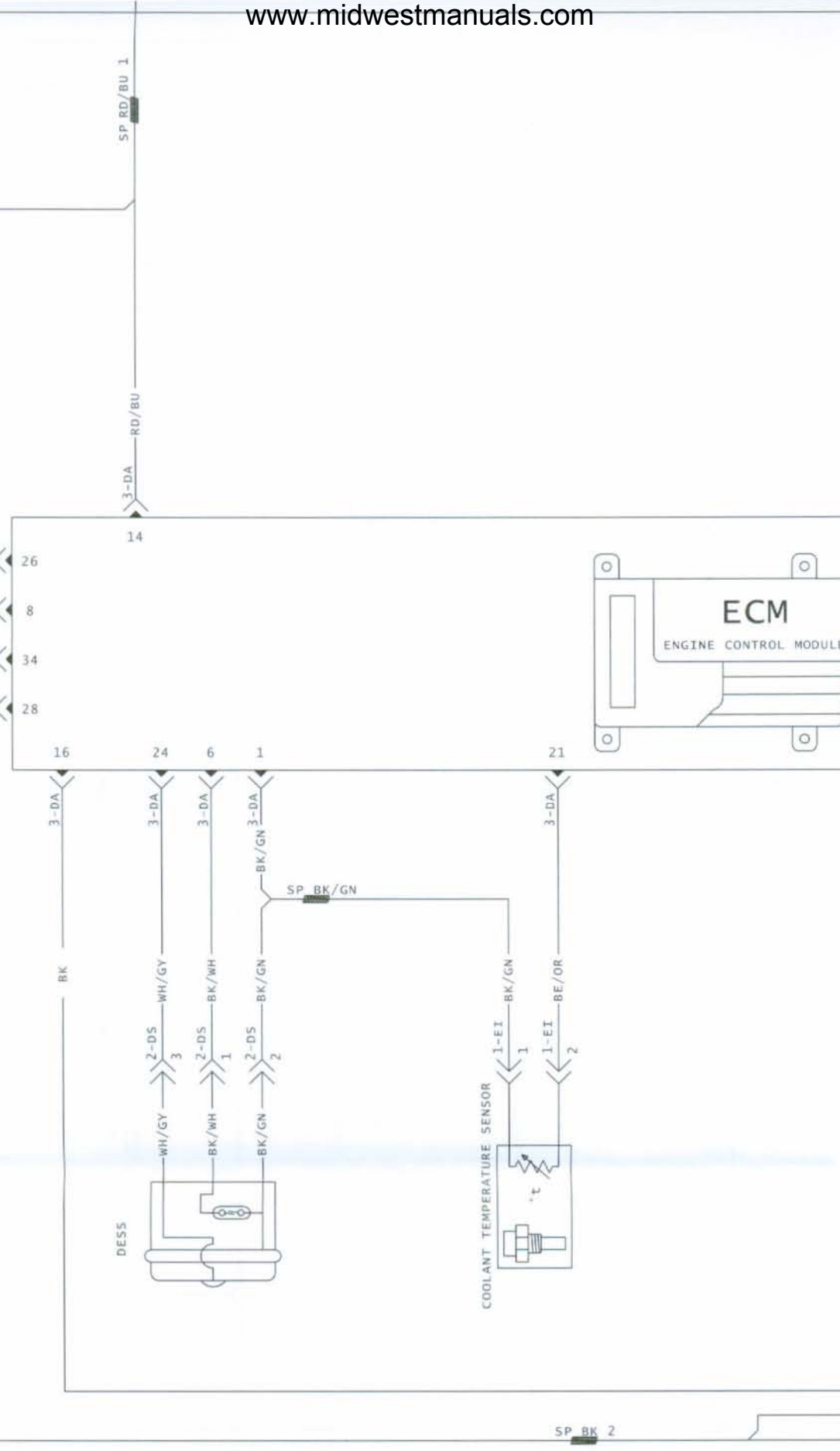

www.midwestmanuals.com

www.midwestmanuals.com

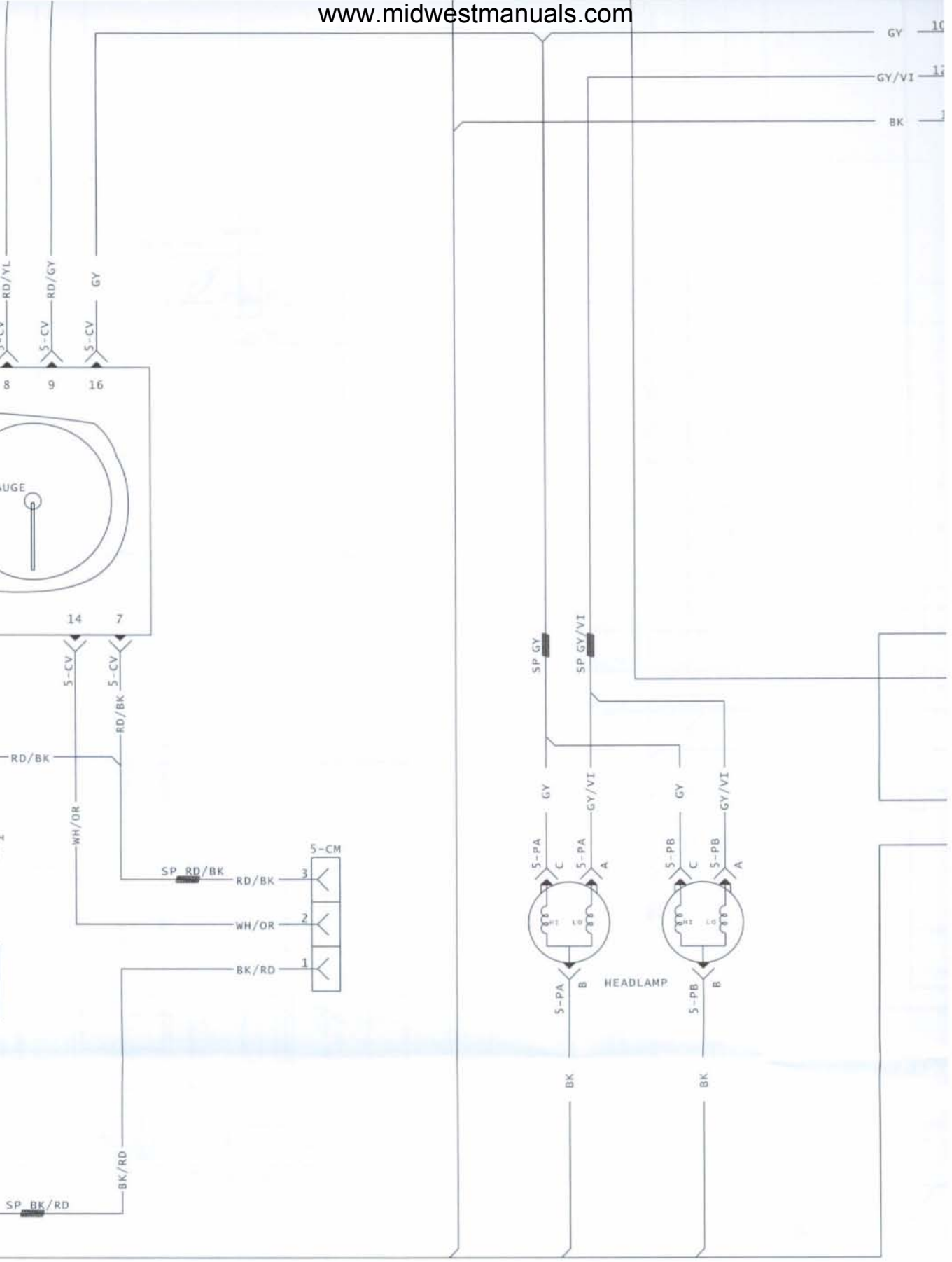

www.midwestmanuals.com

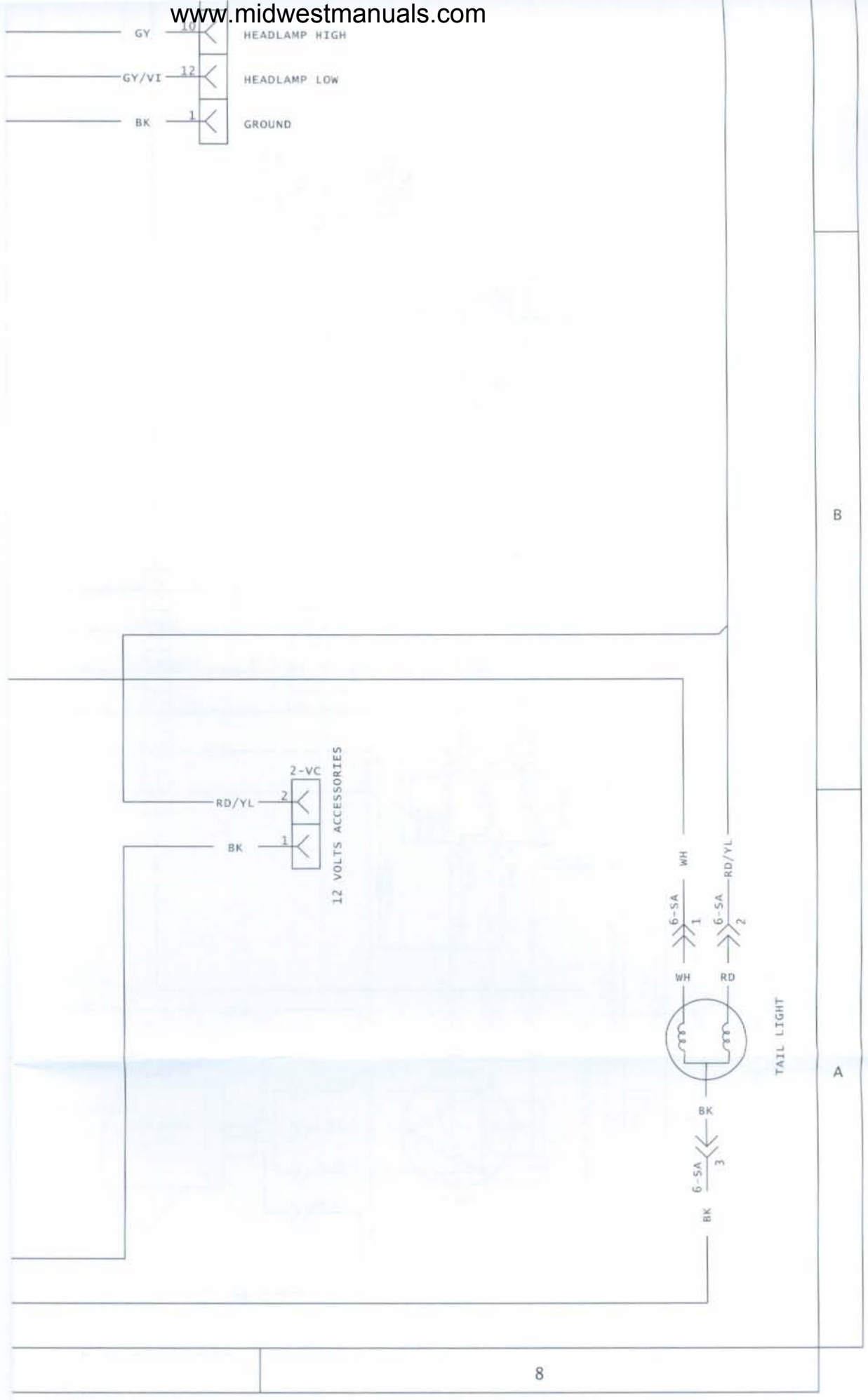

www.midwestmanuals.com

TABLE OF CONTENTS

SAFETY NOTICE IX

INTRODUCTION X
GENERAL X
HOW TO IDENTIFY YOUR VEHICLE X
SNOWMOBILE LIFTING XI
ENGINE EMISSIONS INFORMATION XII
TIGHTENING TORQUE XIII
SELF-LOCKING FASTENERS PROCEDURE XIV
LOCTITE® APPLICATION PROCEDURE XIV
MANUAL INFORMATION XVII

01 MAINTENANCE
01 – MAINTENANCE CHART 7
02 – STORAGE PROCEDURE 9
GENERAL 9
PROCEDURES 9
ENGINE MANAGEMENT SYSTEM 9
FUEL SYSTEM 9
ENGINE 9
ELECTRICAL SYSTEM 9
DRIVE SYSTEM AND BRAKE 10
CHASSIS 10
VEHICLE 10
03 – PRESEASON PREPARATION 13
GENERAL 13
PROCEDURES 13
ENGINE 13
FUEL SYSTEM 13
ELECTRICAL SYSTEM 13
DRIVE SYSTEM AND BRAKE 14

02 ENGINE
01 – ENGINE REMOVAL AND INSTALLATION 15
GENERAL 17
PROCEDURES 17
ENGINE 17
ENGINE SUPPORTS 23
ENGINE RUBBER MOUNT 27
02 – AIR INTAKE SYSTEM 29
GENERAL 30
PROCEDURES 30
AIR FILTER 30
INTAKE MANIFOLD 30
AIR INTAKE SILENCER 33
03 – EXHAUST SYSTEM 37
GENERAL 39
PROCEDURES 39
EXHAUST PIPE 39
EXHAUST MANIFOLD 40
MUFFLER 41
04 – LUBRICATION SYSTEM 43
GENERAL 47
SYSTEM DESCRIPTION 47

www.midwestmanuals.com

TABLE OF CONTENTS

02 ENGINE (cont'd)

04 – LUBRICATION SYSTEM (cont'd)

MAINTENANCE 47
ENGINE OIL 47
INSPECTION 49
ENGINE OIL PRESSURE 49
TROUBLESHOOTING 50
PROCEDURES 51
OIL FILTER 51
OIL PRESSURE SWITCH (OPS) 52
OIL TANK 53
OIL COOLER 54
ENGINE OIL PRESSURE REGULATOR 55
OIL PUMP GEARS 56
OIL PRESSURE PUMP 57
OIL SUCTION PUMPS 59
OIL SUMP COVER 61
OIL SPRAY NOZZLES 62
BREATHER 63

05 – COOLING SYSTEM 65
GENERAL 68
MAINTENANCE 68
ENGINE COOLANT 68
INSPECTION 70
COOLING SYSTEM LEAK TEST 70
TROUBLESHOOTING 71
PROCEDURES 71
OETIKER CLAMPS 71
COOLANT RESERVOIR CAP 72
COOLANT RESERVOIR 72
THERMOSTAT 72
WATER PUMP 74
WATER PUMP DRIVE GEARS 79
FRONT RADIATOR 79
REAR RADIATOR 81

06 – MAGNETO AND STARTER 83
GENERAL 85
PROCEDURES 85
MAGNETO COVER 85
STATOR 87
ROTOR 89
SPRAG CLUTCH 90
SPRAG CLUTCH GEAR 91
STARTER DRIVE GEARS 92
STARTER 92

07 – TIMING CHAIN 95
GENERAL 97
TROUBLESHOOTING 97
PROCEDURES 97
TIMING CHAIN TENSIONER 97
TIMING CHAIN GEAR 98
TIMING CHAIN 100
CHAIN GUIDE (TENSIONER SIDE) 101

www.midwestmanuals.com

02 ENGINE (cont'd)

08 – CYLINDER HEAD 103
GENERAL 107
ADJUSTMENT 107
VALVE CLEARANCE 107
INSPECTION 108
CYLINDER LEAK TEST 108
TROUBLESHOOTING 109
PROCEDURES 110
VALVE COVER 110
CAMSHAFT TIMING GEARS 114
CAMSHAFTS 117
CAM FOLLOWERS 122
CYLINDER HEAD 122
VALVE SPRINGS 124
VALVES 126

09 – CYLINDER BLOCK 129
GENERAL 132
TROUBLESHOOTING 132
PROCEDURES 132
PTO COVER 132
CYLINDER BLOCK 135
CRANKSHAFT 141
BALANCER SHAFT 144
PISTONS AND CONNECTING RODS 145
PISTON RINGS 151

03 ENGINE MANAGEMENT SYSTEM

01 – OVERVIEW 153
GENERAL 155
SYSTEM DESCRIPTION 155

02 – COMMUNICATION TOOLS AND B.U.D.S. SOFTWARE 157
GENERAL 157
TROUBLESHOOTING 157
DIAGNOSTIC TIPS 157
PROCEDURES 159
MULTI-PURPOSE INTERFACE-2 (MPI-2) 159
B.U.D.S. SOFTWARE 162

03 – MONITORING SYSTEM/FAULT CODES 165
GENERAL 165
MONITORING SYSTEM 165
FAULT CODES 166
SPECIFIC FAULT CODES 167
FAULT CODE TABLES 168

04 FUEL SYSTEM

01 – ELECTRONIC FUEL INJECTION 179
GENERAL 179
SYSTEM DESCRIPTION 179
ADJUSTMENT 181
IDLE SPEED 181
CLOSED THROTTLE RESET (TPS) 181
TROUBLESHOOTING 182
DIAGNOSTIC TIPS 182

www.midwestmanuals.com

TABLE OF CONTENTS

04 FUEL SYSTEM (cont'd)

01 – ELECTRONIC FUEL INJECTION (cont'd)

PROCEDURES 183
ENGINE CONTROL MODULE (ECM) 183
THROTTLE CABLE 190
FUEL RAIL 192
FUEL INJECTOR 194
THROTTLE BODY 200
THROTTLE POSITION SENSOR (TPS) 201
IDLE AIR CONTROL VALVE (IACV) 203
CRANKSHAFT POSITION SENSOR (CPS) 205
CAMSHAFT POSITION SENSOR (CAPS) 206
MANIFOLD ABSOLUTE PRESSURE AND TEMPERATURE SENSOR (MAPTS) 208
COOLANT TEMPERATURE SENSOR (CTS) 210

02 – FUEL TANK AND FUEL PUMP 213
GENERAL 215
SYSTEM DESCRIPTION 215
INSPECTION 217
FUEL SYSTEM PRESSURIZATION 217
FUEL TANK LEAK TEST 217
FUEL PUMP PRESSURE TEST 220
PROCEDURES 222
OETIKER CLAMPS 222
FUEL TANK 222
ELECTRIC FUEL PUMP 225
FUEL PRESSURE REGULATOR 228
IN-LINE FUEL FILTER 229
FUEL LEVEL SENSOR 229

05 ELECTRICAL SYSTEM

01 – IGNITION SYSTEM 235
GENERAL 235
SYSTEM DESCRIPTION 235
TROUBLESHOOTING 235
IGNITION SYSTEM TESTING 235
PROCEDURES 236
IGNITION COILS 236
SPARK PLUGS 239

02 – CHARGING SYSTEM 241
GENERAL 241
SYSTEM DESCRIPTION 241
INSPECTION 241
CHARGING SYSTEM OUTPUT 241
TROUBLESHOOTING 243
DIAGNOSTIC TIPS 243
PROCEDURES 243
MAIN FUSE 243
MAIN GROUND CABLES 243
VOLTAGE REGULATOR 244
BATTERY 247

03 – STARTING SYSTEM 251
GENERAL 251
BASIC STARTING SYSTEM OPERATION 251
TROUBLESHOOTING 251
DIAGNOSTIC TIPS 251

www.midwestmanuals.com

05 ELECTRICAL SYSTEM (cont'd)

03 – STARTING SYSTEM (cont'd)

TROUBLESHOOTING (cont'd)

STARTING SYSTEM TESTING SEQUENCE 251

PROCEDURES 252

STARTER SOLENOID 252

START/RER SWITCH 254

04 – DIGITALLY ENCODED SECURITY SYSTEM (D.E.S.S.) 257

GENERAL 257

SYSTEM DESCRIPTION 257

PROCEDURES 257

D.E.S.S. KEY 257

D.E.S.S. POST 259

05 – LIGHTS, GAUGE AND ACCESSORIES 263

GENERAL 263

TROUBLESHOOTING 263

LIGHTING AND ACCESSORIES SYSTEM TESTING 263

PROCEDURES 263

FUSES 263

RELAYS 264

HEADLIGHTS 267

TAILLIGHT AND BRAKE LIGHT 269

GAUGE 271

REMOTE MODE AND SET BUTTON 276

SPEED SENSOR 277

HEATED THROTTLE LEVER 278

HEATED HANDLEBAR GRIPS 280

PASSENGER HEATED GRIPS 287

12-VOLT POWER OUTLET 290

FRONT VISOR OUTLET (DRIVER) 291

REAR VISOR OUTLET (PASSENGER) 291

HEATED BOOTS OUTLET (GTX ONLY) 292

HEATED SEATS 294

06 DRIVE SYSTEM/BRAKE

01 – DRIVE BELT 297

GENERAL 297

APPLICATION CHART 297

PROCEDURES 297

DRIVE BELT GUARD 297

DRIVE BELT GUARD SUPPORT 298

DRIVE BELT 298

02 – DRIVE PULLEY 305

GENERAL 307

PROCEDURES 307

DRIVE PULLEY 307

03 – DRIVEN PULLEY AND COUNTERSHAFT 319

GENERAL 322

PROCEDURES 322

DRIVEN PULLEY 322

COUNTERSHAFT 330

COUNTERSHAFT BEARING 330

COUNTERSHAFT BEARING SUPPORT 331

www.midwestmanuals.com

TABLE OF CONTENTS

06 DRIVE SYSTEM/BRAKE (cont'd)

04 – BRAKE 335
- GENERAL 337
- MAINTENANCE 337
  - BRAKE FLUID 337
- PROCEDURES 338
  - BRAKE PADS 338
  - CALIPER 340
  - BRAKE DISC 343
  - MASTER CYLINDER 343
  - BRAKE LEVER 344
  - BRAKE LIGHT SWITCH 345

05 – CHAINCASE AND REVERSE 347
- GENERAL 350
  - SYSTEM DESCRIPTION 350
- ADJUSTMENT 350
  - DRIVE CHAIN 350
  - SHIFT LINKAGE (MECHANICAL AND ELECTRONIC REVERSE) 350
- MAINTENANCE 351
  - CHAINCASE OIL 351
- TROUBLESHOOTING 352
  - DIAGNOSTIC TIPS (ELECTRONIC REVERSE) 352
  - TESTING SEQUENCE (ELECTRONIC REVERSE) 353
- PROCEDURES 353
  - SHIFT LEVER (MECHANICAL REVERSE) 353
  - ELECTRONIC SHIFT UNIT 354
  - ELECTRONIC REVERSE MOTOR 356
  - FORWARD AND REVERSE RELAYS (ELECTRONIC REVERSE) 358
  - REVERSE POSITION SWITCH (ELECTRONIC REVERSE) 360
  - CHAINCASE 360

06 – DRIVE AXLE 371
- GENERAL 373
- PROCEDURES 373
  - DRIVE AXLE 373
  - MAGNETIC CAPS 374

07 – TRACK 377
- PROCEDURES 377
  - TRACK 377
  - TRACTION ENHANCING PRODUCTS (STUDS) 380

07 CHASSIS

01 – FRONT SUSPENSION 383
- GENERAL 385
- ADJUSTMENT 385
  - SPRING 385
  - SHOCK ABSORBER 386
- PROCEDURES 386
  - SHOCK ABSORBER 386
  - UPPER SUSPENSION ARM 388
  - UPPER BALL JOINT 388
  - LOWER SUSPENSION ARM 390
  - LOWER BALL JOINT 391
  - SKI LEG 392
  - STABILIZER BAR 392

www.midwestmanuals.com

07 CHASSIS (cont'd)
02 – REAR SUSPENSION 395
GENERAL 402
SYSTEM DESCRIPTION (ACS SUSPENSION) 402
TROUBLESHOOTING 402
DIAGNOSTIC TIPS (ACS SUSPENSION) 402
TESTING SEQUENCE (ACS SUSPENSION) 403
PROCEDURES 403
SUSPENSION ASSEMBLY 403
REAR AXLE 404
SHOCK ABSORBERS 406
REAR SPRINGS 420
SLIDER SHOES 421
FRONT ARM 423
REAR ARM 424
PIVOT ARM 425
COUPLING BLOCKS 425
IDLER WHEELS 426
IDLER WHEEL SUPPORT 426
STOPPER STRAP 426
ACS COMPRESSOR 427
ACS MODULE 430
ACS SOLENOID VALVE 433
ACS MANIFOLD 435
ACS HOSES 435
03 – STEERING SYSTEM 437
GENERAL 441
ADJUSTMENT 441
STEERING ALIGNMENT 441
PROCEDURES 442
SKI RUNNERS 442
SKIS 442
SKI HANDLES 442
SKI LEGS 443
HANDLEBAR GRIPS 443
HANDLEBAR 445
HANDLEBAR EXTENSION 446
ADJUSTABLE HANDLEBAR EXTENSION 447
TIE-RODS 448
STEERING COLUMN 449
04 – BODY 451
GENERAL 451
CLEANING 451
BODY PARTS REPAIR 451
PROCEDURES 452
DECAL 452
SIDE PANEL 452
HOOD 453
BOTTOM PAN COVER 454
FRONT BUMPER 455
FRONT BOTTOM PAN 455
WINDSHIELD 456
GAUGE SUPPORT 457
CONSOLE 458
REAR RACK 459

www.midwestmanuals.com

TABLE OF CONTENTS

07 CHASSIS (cont'd)

04 – BODY (cont'd)

PROCEDURES (cont'd)

SEAT COVER 461
PASSENGER'S HANDHOLDS 461
BACKREST 462
BACKREST ARMS 462
BACKREST MECHANISM 462

05 – FRAME 465

GENERAL 467
RIVET DRILLING PROCEDURE 467

PROCEDURES 468
FRAME 468
REAR BUMPER 468
REAR FRAME MEMBER 468
FRONT FRAME MEMBER 469
FRONT CROSS MEMBER 470
ENGINE MEMBER 473

08 TECHNICAL SPECIFICATIONS

01 – 1200 4-TEC 475

09 WIRING DIAGRAM

01 – WIRING DIAGRAM INFORMATION 483

GENERAL 483
WIRING DIAGRAM LOCATION 483
WIRING DIAGRAM CODES 483
DEUTSCH CONNECTOR INFORMATION 484
PACKARD CONNECTOR INFORMATION (GAUGE) 485
AMP MULTILOCK CONNECTOR INFORMATION 485
AMP CONNECTOR (8-CIRCUIT) INFORMATION 486
KOSTAL CONNECTOR INFORMATION (ECM) 487
BATTERY CABLE TERMINAL INFORMATION 489

www.midwestmanuals.com

INTRODUCTION

GENERAL

This Shop Manual covers the following BRP made 2009 REV-XR (1200 4-TEC) models:

MODEL	ENGINE TYPE	CHASSIS	MODEL NUMBER
GTX LE	1203	REV-XR	EP9A, EP9B
GTX SE	1203	REV-XR	ER9A, ER9B
GSX Limited	1203	REV-XR	DK9A, DK9B
MXZ Renegade	1203	REV-XR	MN9A, MN9B
MXZ Renegade X	1203	REV-XR	MM9A, MM9B, MM9C
MXZ TNT	1203	REV-XR	ML9A
MXZ X	1203	REV-XR	MK9A, MBK9B, MBK9C

The information and component/system descriptions contained in this manual are correct at time of publication. BRP however, maintains a policy of continuous improvement of its products without imposing upon itself any obligation to install them on products previously manufactured.

Due to late changes, it may have some differences between the manufactured product and the description or specifications in this document.

BRP reserves the right at any time to discontinue or change specifications, designs, features, models or equipment without incurring obligation.

This manual uses technical terms which may be slightly different from the ones used in the *PARTS CATALOG*.

When ordering parts always refer to the specific model *PARTS CATALOG*.

HOW TO IDENTIFY YOUR VEHICLE

VEHICLE IDENTIFICATION NUMBER LOCATION

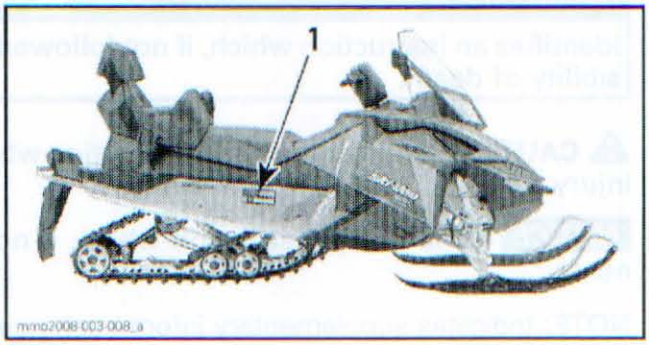

TYPICAL
1. Vehicle description decal

www.midwestmanuals.com

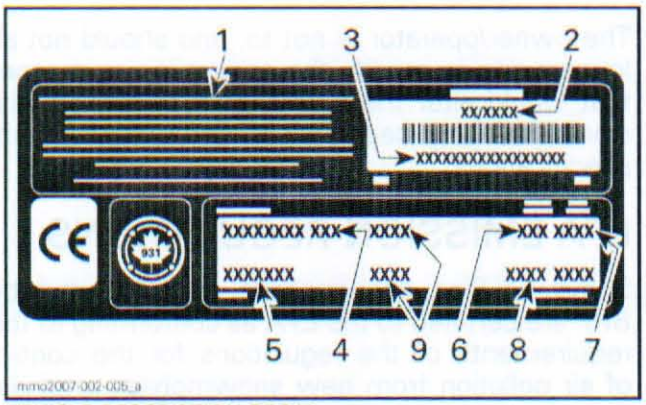

VEHICLE DESCRIPTION DECAL

1. *Manufacturer name*
2. *Manufacturing date*
3. *Vehicle identification number (V.I.N.)*
4. *Model name*
5. *Option package*
6. *Engine type*
7. *Model year*
8. *Color codes*
9. *Vehicle weight/engine power (European models)*

VEHICLE IDENTIFICATION NUMBER (V.I.N.) MEANING

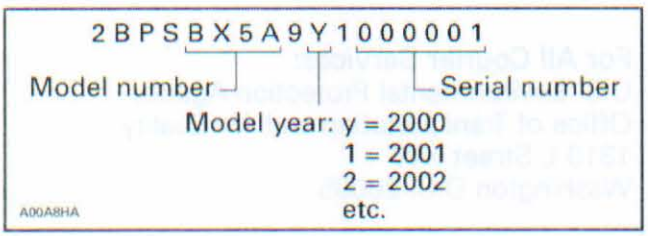

ENGINE SERIAL NUMBER LOCATION

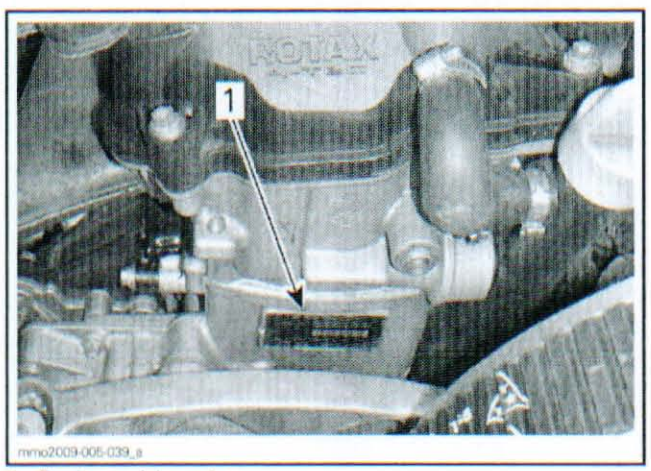

1. *Engine serial number*

SNOWMOBILE LIFTING

To lift a REV-XR securely, it is important to use the reinforced footrest holes.



1. *Reinforced holes in footrest*

Install lifting tool hooks in holes as shown.

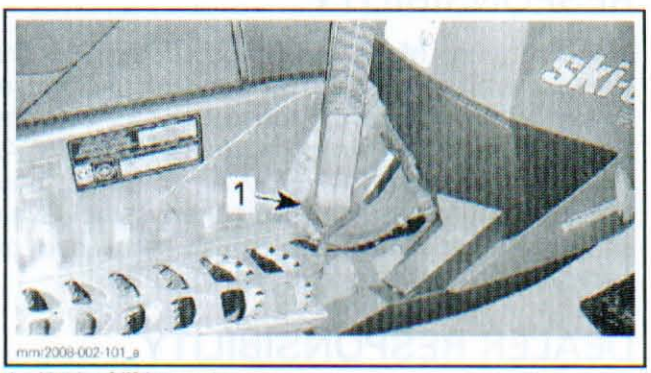

1. *Hook of lifting tool*

⚠ WARNING

Do not use footrest openings, operator's footrests (GTX models) or steering column to lift the snowmobile. These parts are not designed to support the snowmobile weight. Frame or steering system could be seriously damaged and serious injury or death could happen.

www.midwestmanuals.com



GTX MODEL SHOWN
1. *Reinforced holes in footrest*
2. *LH operator's footrest*

ENGINE EMISSIONS INFORMATION

MANUFACTURER'S RESPONSIBILITY

Manufacturers of engines must determine the exhaust emission levels for each engine horsepower family and certify these engines with the United States of America *ENVIRONMENTAL PROTECTION AGENCY (EPA)*. An emissions control information label, showing emission levels and engine specifications, must be placed on each vehicle at the time of manufacture.

DEALER RESPONSIBILITY

When performing service on snowmobiles that carry an emissions control information label, adjustments must be kept within published factory specifications.

Replacement or repair of any emission related component must be executed in a manner that maintains emission levels within the prescribed certification standards.

Dealers are not to modify the engine in any manner that would alter the horsepower or allow emission levels to exceed their predetermined factory specifications.

Exceptions include manufacturer's prescribed changes, such as altitude adjustments for example.

OWNER RESPONSIBILITY

The owner/operator is required to have engine maintenance performed to maintain emission levels within prescribed certification standards.

The owner/operator is not to, and should not allow anyone to modify the engine in any manner that would alter the horsepower or allow emissions levels to exceed their predetermined factory specifications.

EPA EMISSION REGULATIONS

Some Ski-Doo snowmobiles manufactured by BRP are certified to the EPA as conforming to the requirements of the regulations for the control of air pollution from new snowmobiles engines. This certification is contingent on certain adjustments being set to factory standards. For this reason, the factory procedure for servicing the product must be strictly followed and, whenever practicable, returned to the original intent of the design.

The responsibilities listed above are general and in no way a complete listing of the rules and regulations pertaining to the EPA requirements on exhaust emissions for snowmobiles products. For more detailed information on this subject, you may contact the following locations:

For All Courier Services:
U.S. Environmental Protection Agency
Office of Transportation and Air Quality
1310 L Street NW
Washington D.C. 20005

Regular US Postal Mail:
1200 Pennsylvania Ave. NW
Mail Code 6403J
Washington D.C. 20460

Internet: http://www.epa.gov/otaq/

E-Mail: otaqpublicweb@epa.gov

www.midwestmanuals.com

TIGHTENING TORQUE

Tighten fasteners to torque mentioned in exploded views or text. When they are not specified, refer to following table.

⚠ WARNING

Torque wrench tightening specifications must strictly be adhered to.
Locking devices (e.g.: locking tabs, elastic stop nuts, self-locking fasteners, cotter pins, etc.) must be replaced with new ones.

In order to avoid a poor assembling, tighten screws, bolts or nuts in accordance with the following procedure:

1. Manually screw all screws, bolts and/or nuts.
2. Apply the half of the recommended torque value.

NOTICE **Be sure to use proper tightening torque for the proper strength grade.**

NOTE: When possible, always apply torque on the nut.

3. Torque at the recommended torque value.

NOTE: Always torque screws, bolts or nuts in a crisscross sequence.

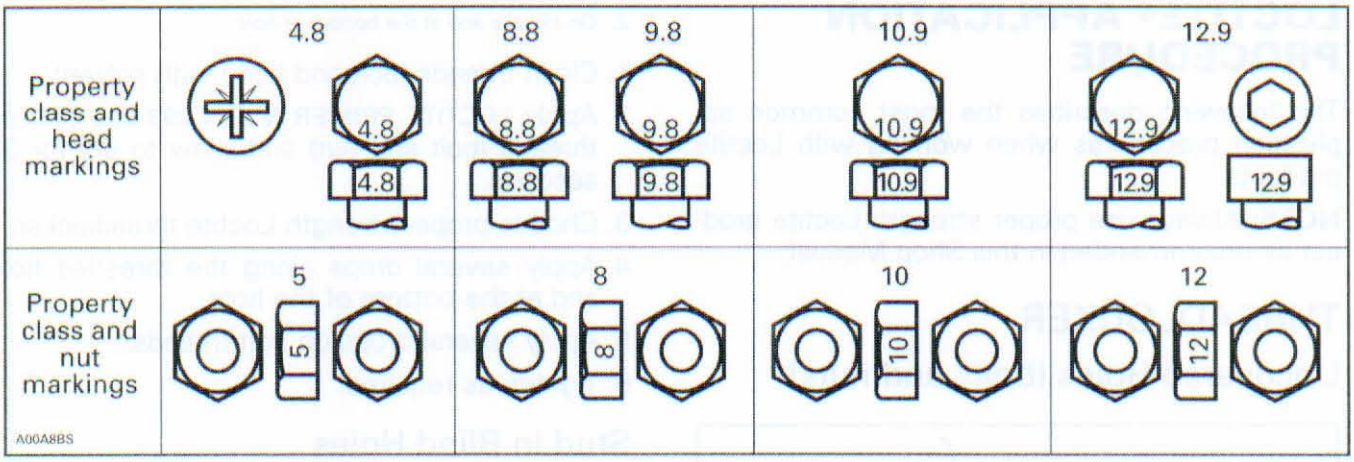

FASTENER SIZE	FASTENER GRADE/TORQUE			
	5.8 Grade	**8.8** Grade	**10.9** Grade	**12.9** Grade
M4	1.5 – 2 N•m (13 – 18 lbf•**in**)	2.5 – 3 N•m (22 – 27 lbf•**in**)	3.5 – 4 N•m (31 – 35 lbf•**in**)	4 – 5 N•m (35 – 44 lbf•**in**)
M5	3 – 3.5 N•m (27 – 31 lbf•**in**)	4.5 – 5.5 N•m (40 – 47 lbf•**in**)	7 – 8.5 N•m (62 – 75 lbf•**in**)	8 – 10 N•m (71 – 89 lbf•**in**)
M6	6.5 – 8.5 N•m (58 – 75 lbf•**in**)	8 – 12 N•m (71 – 106 lbf•**in**)	10.5 – 15 N•m (93 – 133 lbf•**in**)	16 N•m (142 lbf•**in**)
M8	15 N•m (133 lbf•**in**)	24.5 N•m (18 lbf•ft)	31.5 N•m (23 lbf•ft)	40 N•m (30 lbf•ft)
M10	29 N•m (21 lbf•ft)	48 N•m (35 lbf•ft)	61 N•m (45 lbf•ft)	72.5 N•m (53 lbf•ft)
M12	52 N•m (38 lbf•ft)	85 N•m (63 lbf•ft)	105 N•m (77 lbf•ft)	127.5 N•m (94 lbf•ft)
M14	85 N•m (63 lbf•ft)	135 N•m (100 lbf•ft)	170 N•m (125 lbf•ft)	200 N•m (148 lbf•ft)

www.midwestmanuals.com

SELF-LOCKING FASTENERS PROCEDURE

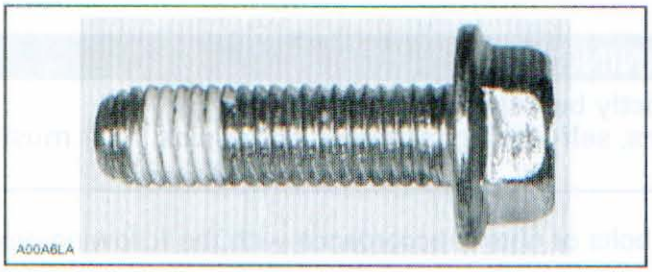

TYPICAL — SELF-LOCKING FASTENER

The following describes the most common application procedures when working with self-locking fasteners.

Use a metal brush or a tap to clean the hole properly then use a solvent, let act during 30 minutes and wipe off. The solvent utilization is to ensure the adhesive works properly.

LOCTITE® APPLICATION PROCEDURE

The following describes the most common application procedures when working with Loctite products.

NOTE: Always use proper strength Loctite product as recommended in this Shop Manual.

THREADLOCKER

Uncovered Holes (bolts and nuts)

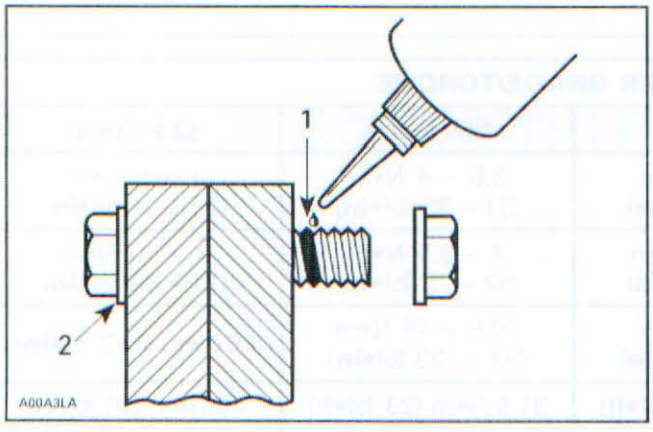

1. *Apply here*
2. *Do not apply*

1. Clean threads (bolt and nut) with solvent.
2. Apply LOCTITE PRIMER N (P/N 293 800 041) on threads and allow to dry.
3. Choose proper strength Loctite threadlocker.
4. Fit bolt in the hole.
5. Apply a few drops of threadlocker at proposed tightened nut engagement area.
6. Position nut and tighten as required.

Blind Holes

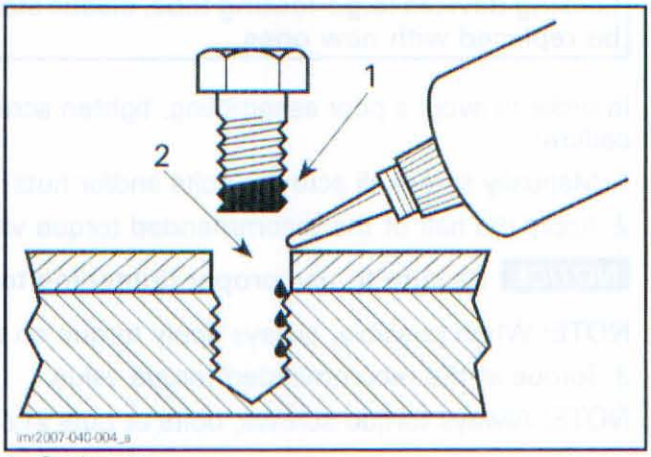

1. *On threads*
2. *On threads and at the bottom of hole*

1. Clean threads (bolt and hole) with solvent.
2. Apply LOCTITE PRIMER N (P/N 293 800 041) on threads (bolt and nut) and allow to dry for 30 seconds.
3. Choose proper strength Loctite threadlocker.
4. Apply several drops along the threaded hole and at the bottom of the hole.
5. Apply several drops on bolt threads.
6. Tighten as required.

Stud in Blind Holes

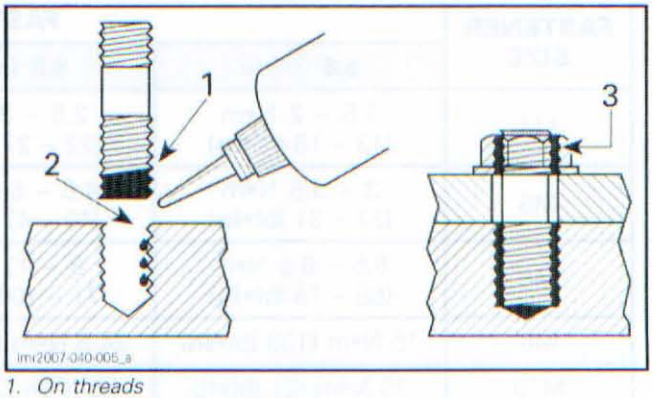

1. *On threads*
2. *On threads and in the hole*
3. *Onto nut threads*

1. Clean threads (stud and hole) with solvent.
2. Apply LOCTITE PRIMER N (P/N 293 800 041) on threads and allow to dry.

www.midwestmanuals.com

3. Put 2 or 3 drops of proper strength Loctite threadlocker on female threads and in hole.

NOTE: To avoid a hydro lock situation, do not apply too much Loctite.

4. Apply several drops of proper strength Loctite on stud threads.
5. Install stud.
6. Install cover, etc.
7. Apply drops of proper strength Loctite on uncovered threads.
8. Tighten nuts as required.

Pre-Assembled Parts

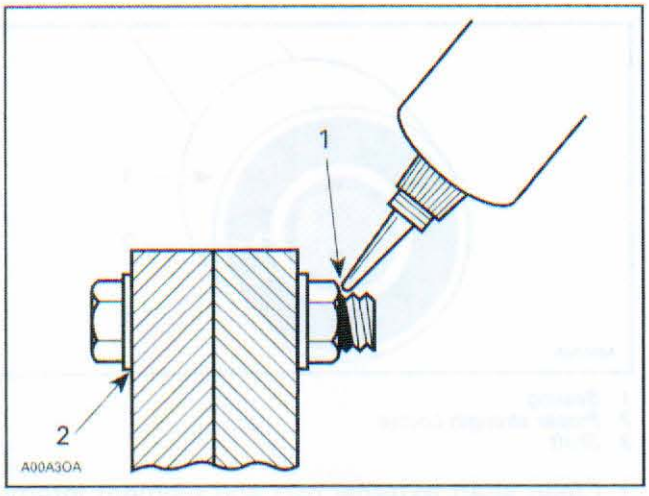

1. Apply here
2. Do not apply

1. Clean bolts and nuts with solvent.
2. Assemble components.
3. Tighten nuts.
4. Apply drops of proper strength Loctite on bolt/nut contact surfaces.
5. Avoid touching metal with tip of flask.

NOTE: For preventive maintenance on existing equipment, retighten nuts and apply proper strength Loctite on bolt/nut contact surfaces.

Adjusting Screw

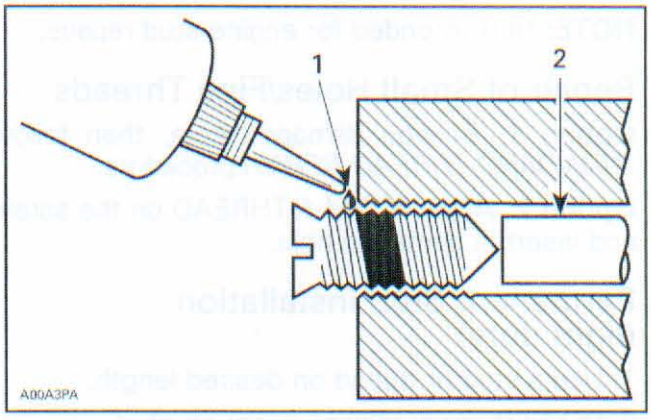

1. Apply here
2. Plunger

1. Adjust screw to proper setting.
2. Apply drops of proper strength Loctite threadlocker on screw/body contact surfaces.
3. Avoid touching metal with tip of flask.

NOTE: If it is difficult to readjust, heat screw with a soldering iron (232°C (450°F)).

STRIPPED THREAD REPAIR

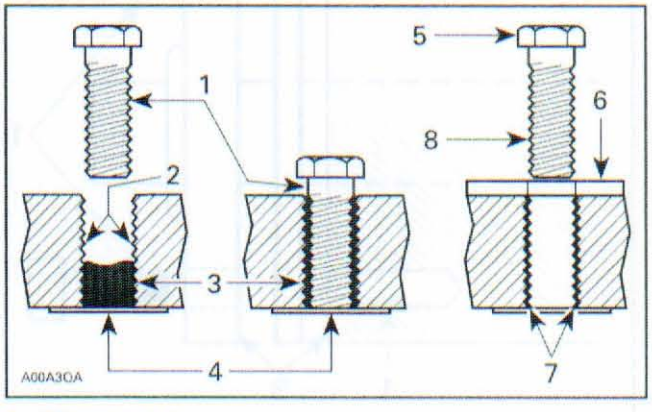

1. Release agent
2. Stripped threads
3. Form-A-Thread
4. Tapes
5. Cleaned bolt
6. Plate
7. New threads
8. Threadlocker

Standard Thread Repair

Follow instructions on Loctite FORM-A-THREAD 81668 package.

If a plate is used to align bolt:

1. Apply release agent on mating surfaces.
2. Put waxed paper or similar film on the surfaces.

www.midwestmanuals.com

3. Twist bolt when inserting it to improve thread conformation.

NOTE: NOT intended for engine stud repairs.

Repair of Small Holes/Fine Threads

Option 1: Enlarge damaged hole, then follow *STANDARD THREAD REPAIR* procedure.

Option 2: Apply FORM-A-THREAD on the screw and insert in damaged hole.

Permanent Stud Installation (light duty)

1. Use a stud or thread on desired length.
2. DO NOT apply release agent on stud.
3. Do a STANDARD THREAD REPAIR.
4. Allow to cure for 30 minutes.
5. Assemble.

GASKET COMPOUND

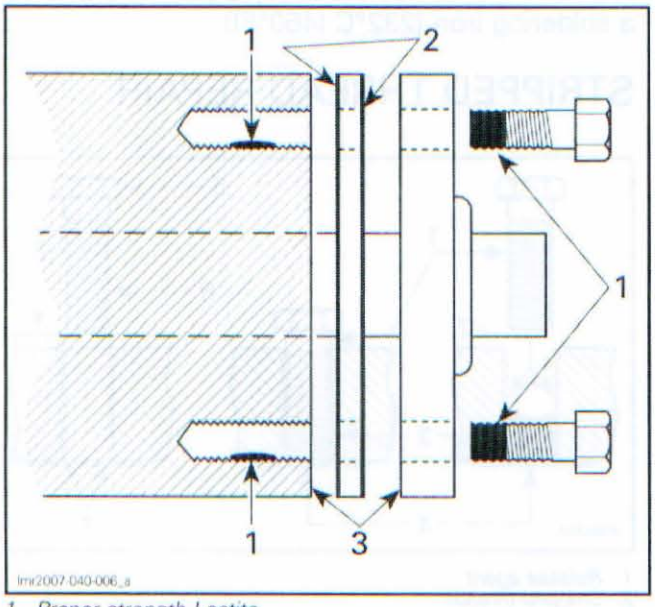

1. *Proper strength Loctite*
2. *Loctite Primer N (P/N 293 800 041) and Gasket Eliminator 518 (P/N 293 800 038) on both sides of gasket*
3. *Loctite Primer N only*

1. Remove old gasket and other contaminants with LOCTITE CHISEL (GASKET REMOVER) (P/N 413 708 500). Use a mechanical mean if necessary.

NOTE: Avoid grinding.

2. Clean both mating surfaces with solvent.
3. Spray Loctite Primer N on both mating surfaces and on both sides of gasket. Allow to dry 1 or 2 minutes.
4. Apply LOCTITE 518 (P/N 293 800 038) on both sides of gasket, using a clean applicator.
5. Place gasket on mating surfaces and assemble immediately.

NOTE: If the cover is bolted to blind holes (above), apply proper strength Loctite in the hole and on threads. Tighten.

If holes are sunken, apply proper strength Loctite on bolt threads.

6. Tighten as usual.

MOUNTING ON SHAFT

Mounting with a Press

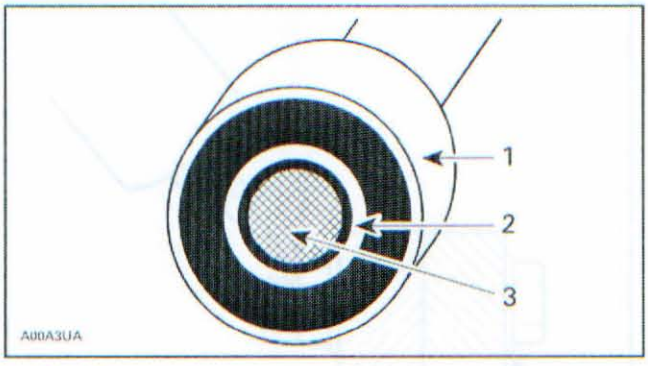

1. *Bearing*
2. *Proper strength Loctite*
3. *Shaft*

1. Clean shaft external part and element internal part.
2. Apply a strip of proper strength Loctite on shaft circumference at insert or engagement point.

NOTE: Retaining compound is always forced out when applied on shaft.

3. DO NOT use antiseize Loctite or any similar product.
4. No curing period is required.

Mounting in Tandem

1. Apply retaining compound on internal element bore.
2. Continue to assemble as shown above.

www.midwestmanuals.com

CASE-IN COMPONENTS

Metallic Gaskets

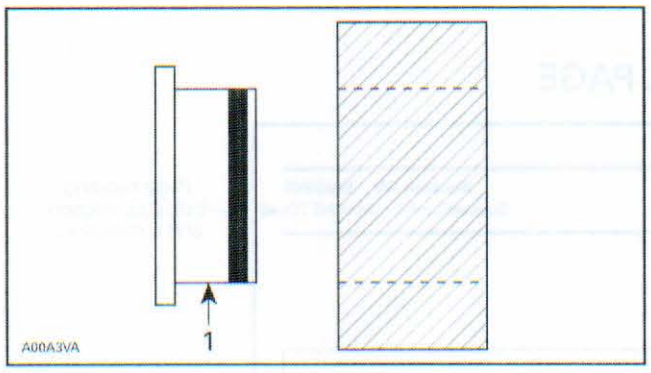

1. Proper strength Loctite

1. Clean inner housing diameter and outer gasket diameter.
2. Spray housing and gasket with LOCTITE PRIMER N (P/N 293 800 041).
3. Apply a strip of proper strength Loctite on leading edge of outer metallic gasket diameter.

NOTE: Any Loctite product can be used here. A low strength liquid is recommended as normal strength and gap are required.

4. Install according to standard procedure.
5. Wipe off surplus.
6. Allow it to cure for 30 minutes.

NOTE: Normally used on worn-out housings to prevent leaking or sliding.

It is generally not necessary to remove gasket compound applied on outer gasket diameter.

MANUAL INFORMATION

The manual is divided into many major sections as you can see in the main table of contents at the beginning of the manual.

Each section is divided in various subsections, and again, each subsection has one or more division.

Illustrations and photos show the typical construction of the different assemblies and, in all cases, may not reproduce the full detail or exact shape of the parts shown. However, they represent parts which have the same or a similar function.

NOTICE Most components of those vehicles are built with parts dimensioned in the metric system. Most fasteners are metric and must not be replaced by customary fasteners or vice-versa. Mismatched or incorrect fasteners could cause damage to the vehicle or possible personal injury.

As many of the procedures in this manual are interrelated, we suggest, that before undertaking any task, you read and thoroughly understand the entire section or subsection in which the procedure is contained.

A number of procedures throughout the book require the use of special tools. Before commencing any procedure, be sure that you have on hand all the tools required, or approved equivalents.

The use of RIGHT and LEFT indications in the text, always refers to driving position (when sitting on vehicle).

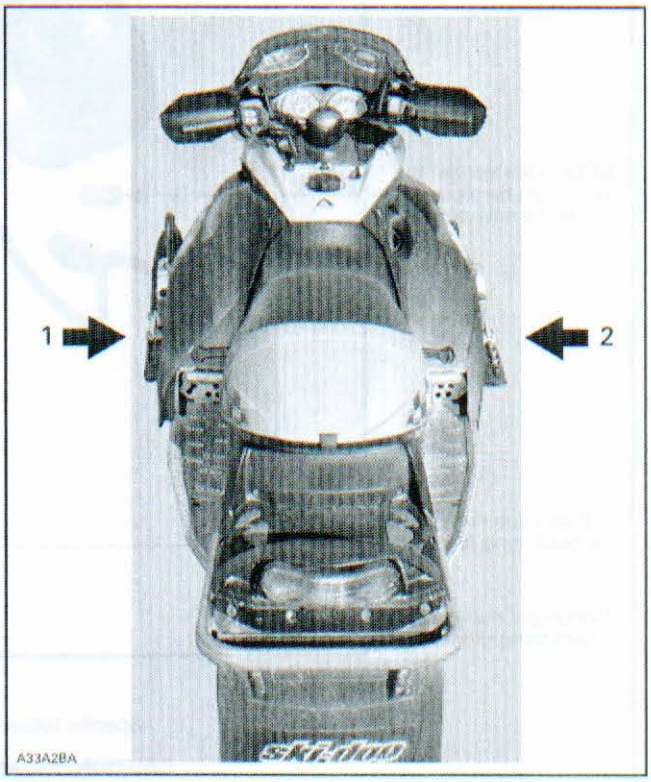

TYPICAL
1. Left
2. Right

www.midwestmanuals.com

TYPICAL PAGE

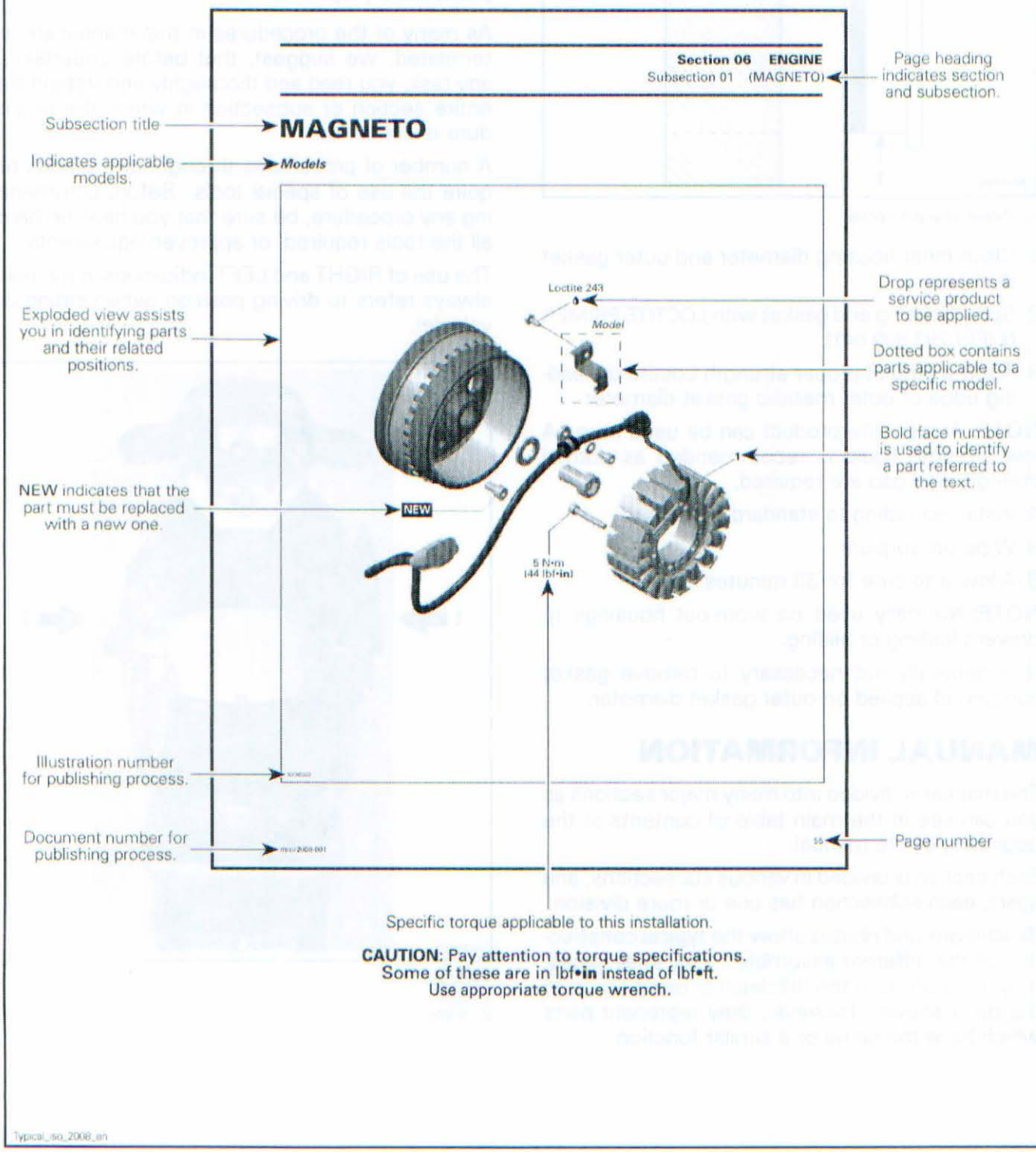

www.midwestmanuals.com

TYPICAL PAGE

Tittle in bold indicates category of information to be carried out.

GENERAL

NOTE: The following procedures can be done without removing the engine.

During assembly/installation, use the torque values and service products as in the exploded views.

Reference to a specific section or subsection.

Clean threads before applying a threadlocker. Refer to the *SELF-LOCKING FASTENERS* and *LOCTITE APPLICATION* sections at the beginning of this manual for complete procedure.

⚠ WARNING

Torque wrench tightening specifications must be strictly adhered to.
Locking devices (e.g.: locking tabs, elastic stop nuts, self-locking fasteners, etc.) must be replaced with new ones.

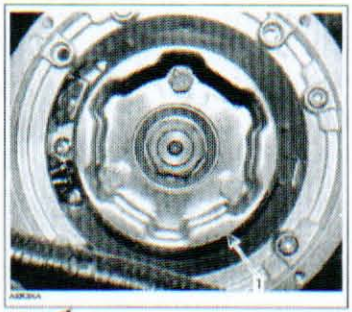

TYPICAL

"TYPICAL" indicates a general view which may not represent exact details.

Call-outs pertaining to above illustration.

PROCEDURES

Indicates component procedures apply to.

MAGNETO FLYWHEEL

Magneto Flywheel Cleaning

Clean all metal components in a non-ferrous metal cleaner.

CAUTION: Clean magneto flywheel using only a clean cloth.

Indicates specific procedure to be carried out.

Magneto Flywheel Removal

Remove muffler, refer to the *EXHAUST SYSTEM* section.

Remove acoustic panel.

Remove rewind starter.

Remove starting pulley no. 2.

NOTE: To remove starting pulley bolts, hold magneto flywheel with a socket as shown.



TYPICAL

Illustration always follows text to which it applies.

Models

Remove the connecting flange retaining the rewind starter to the engine housing.

Italic bold face typesetting indicates a procedure applicable to a specific model(s).

Bold face number following part name refers to exploded view at beginning of subsection.

typical_txt_2008_en

www.midwestmanuals.com

www.midwestmanuals.com

SERVICE TOOLS INDEX

ADAPTER HOSE
(P/N 529 035 652)



Page: 49

BALL JOINT EXTRACTOR
(P/N 529 035 827)

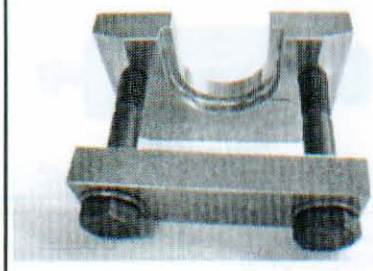

Page: 389

BALL JOINT INSTALLER
(P/N 529 035 975)



Page: 391

BALL JOINT REMOVER SUPPORT
(P/N 529 036 121)



Page: 391

BEARING PULLER/PUSHER
(P/N 529 036 111)



Page: 364

BEARING PULLER/PUSHER
(P/N 529 036 112)



Page: 364

CALIPER PULLER
(P/N 529 036 145)



Page: 341

CAMSHAFT LOCKING TOOL
(P/N 529 036 149)

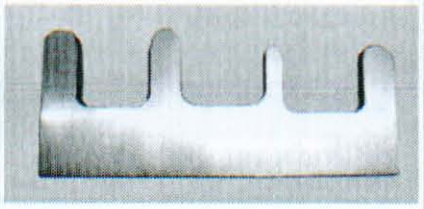

Page: 98, 117

CENTER BOLT
(P/N 529 036 154)



Page: 86

CHAINCASE GEAR RETAINING TOOL
(P/N 529 036 152)



Page: 322

COUNTERSHAFT BEARING
INSTALLER
(P/N 529 036 066)

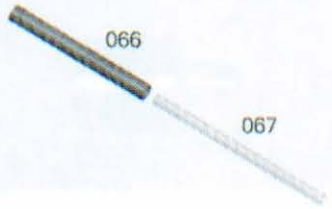

Page: 331

COUNTERSHAFT BEARING
REMOVER
(P/N 529 036 065)



Page: 330

COUNTERSHAFT RETAINING TOOL
(P/N 529 036 165)

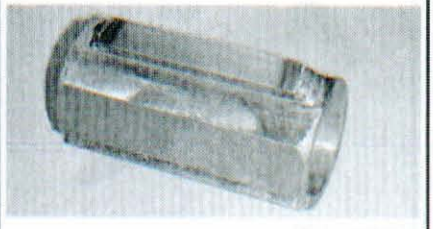

Page: 328

COUNTERSHAFT SUPPORT
(P/N 529 036 067)

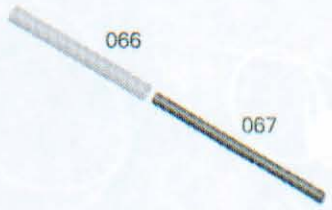

Page: 330

www.midwestmanuals.com

SERVICE TOOLS INDEX

CRANKSHAFT LOCKING BOLT
(P/N 529 036 148)



Page: 141, 144

CRANKSHAFT PROTECTOR (MAG SIDE)
(P/N 529 036 160)

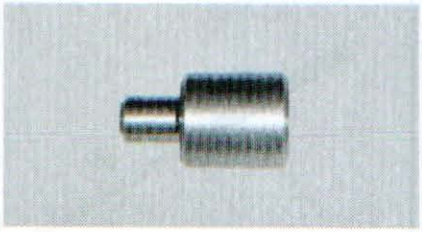

Page: 89

CRIMPING PLIER FOR HEAVY GAGE WIRE
(P/N 529 035 730)



Page: 490

CRIMPING TOOL
(P/N 529 035 909)

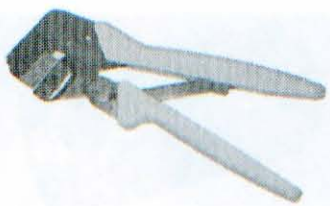

Page: 488

D.E.S.S. POST INTERFACE
(P/N 529 036 019)

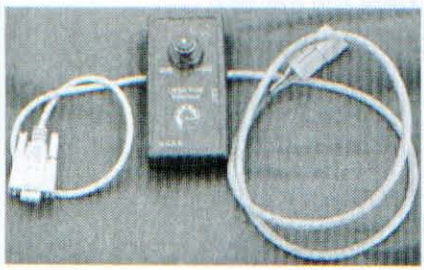

Page: 161

DIAL INDICATOR ADAPTER
(P/N 529 036 159)

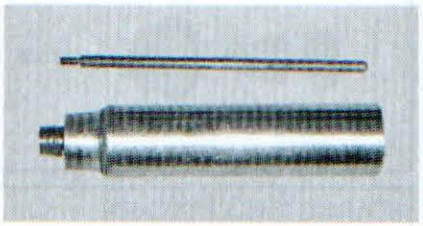

Page: 141

DIGITAL INDUCTION TACHOMETER
(P/N 529 014 500)

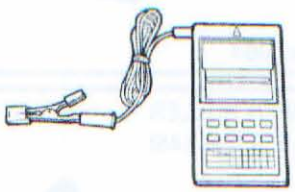

Page: 181

DRIVE PULLEY HOLDER
(P/N 529 035 674)

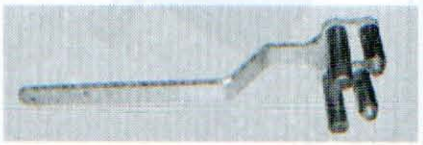

Page: 307–308, 316

DRIVE PULLEY PULLER
(P/N 529 022 400)

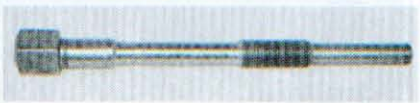

Page: 307

DRIVEN PULLEY OPENING TOOL
(P/N 529 017 200)

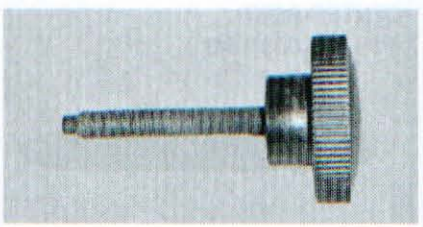

Page: 299

DRIVEN PULLEY OPENING TOOL
(P/N 529 036 127)

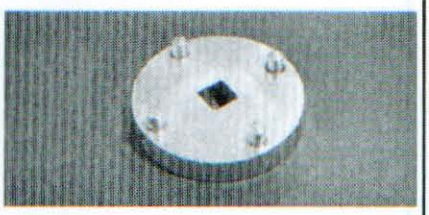

Page: 299, 301

DRIVEN PULLEY SPRING COMPRESSOR
(P/N 529 036 064)

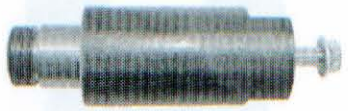

Page: 324

ECM ADAPTER TOOL (2 CONNECTORS)
(P/N 420 277 010)

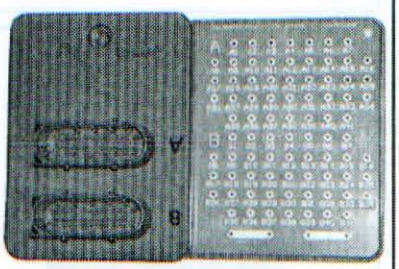

Page: 52, 184, 186–187, 198, 204, 209–211, 227, 238, 253, 255, 261, 266, 359

ENGINE LEAK DOWN TEST KIT
(P/N 529 035 661)

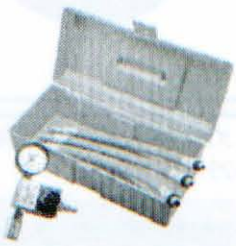

Page: 108, 429

www.midwestmanuals.com

ENGINE LIFTING TOOL
(P/N 529 036 151)

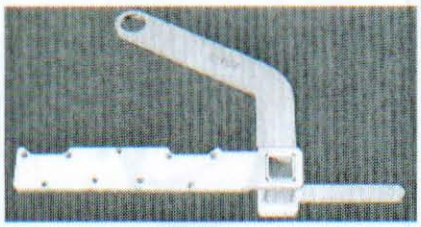

Page: 18, 23, 27, 331

FLOATING PISTON PULLER
(P/N 529 035 901)

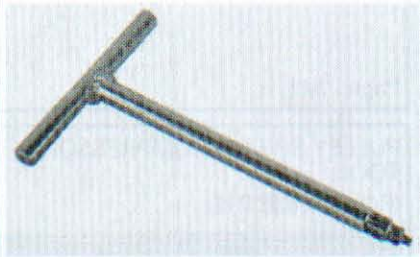

Page: 415–416

FLOATING PISTON PULLER
(P/N 529 035 907)

Page: 409

FLUKE 115 DIGITAL MULTIMETER
(P/N 529 035 868)



Page: 52, 87, 93, 187, 196–199, 201–202, 207, 211, 226, 229, 231, 236, 242, 244–245, 252, 254, 260, 265, 268, 271, 274, 277–278, 280, 282, 287, 290–292, 294, 345, 357–360, 428, 431, 434

FUEL HOSE ADAPTER
(P/N 529 036 023)

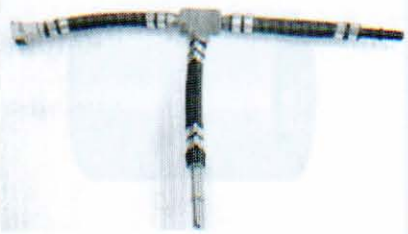

Page: 220

FUEL HOSE DISCONNECT TOOL
(P/N 529 036 037)



Page: 193

FUEL PUMP NUT TOOL
(P/N 529 036 118)

Page: 227–228

FUEL TANK NUT WRENCH
(P/N 529 035 891)



Page: 458

GAS FILL TOOL KIT
(P/N 503 190 102)



Page: 408, 414, 417

GAS SHOCK VALVE TOOL (TIRE VALVE TYPE)
(P/N 529 035 570)

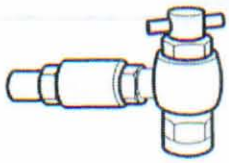

Page: 414

HANDLE
(P/N 420 877 650)

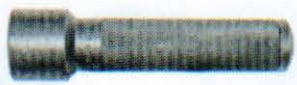

Page: 77

HEATED GRIP INSTALLER
(P/N 529 035 897)



Page: 445

KOSTAL DIE
(P/N 529 035 906)

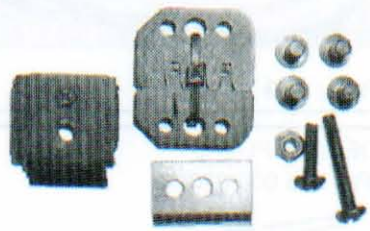

Page: 488

LEAK TEST KIT (FUEL/OIL)
(P/N 529 033 100)

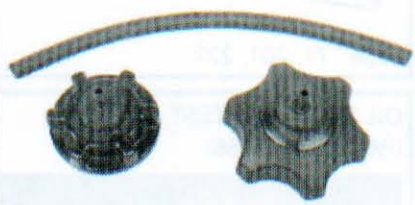

Page: 218

MAGNETO PULLER
(P/N 529 035 748)

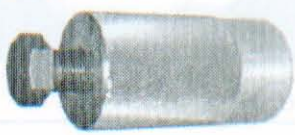

Page: 89

www.midwestmanuals.com

SERVICE TOOLS INDEX

MPI-2 DIAGNOSTIC CABLE
(P/N 710 000 851)



Page: 161

MPI-2 INTERFACE CARD
(P/N 529 036 018)



Page: 159

OETIKER PLIERS
(P/N 295 000 070)

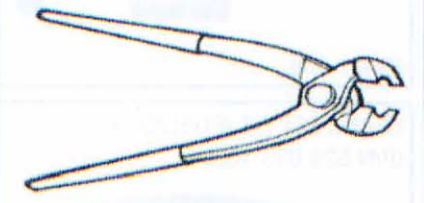

Page: 71, 201, 222

OIL PRESSURE TEST CAP
(P/N 529 036 158)

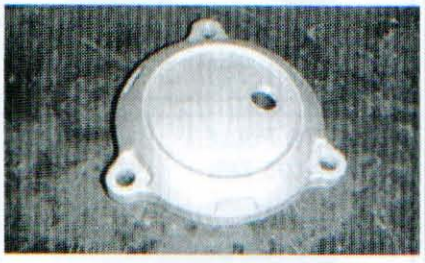

Page: 49

OIL SEAL INSTALLER
(P/N 529 036 155)

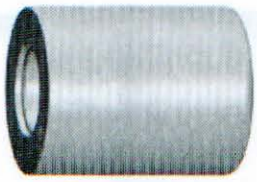

Page: 133

OIL SEAL PUSHER
(P/N 529 035 757)

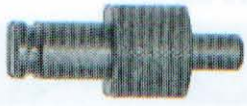

Page: 77

PISTON CIRCLIP INSTALLER
(P/N 529 036 153)



Page: 148

PISTON RING COMPRESSOR
(P/N 529 036 156)



Page: 149

PRELOAD TESTER
(P/N 529 036 164)



Page: 328

PRESSURE GAUGE
(P/N 529 035 709)



Page: 50, 220

PROTECTIVE CAP
(P/N 529 036 150)

Page: 341

PULLEY SPRING COMPRESSOR TOOL
(P/N 529 036 012)

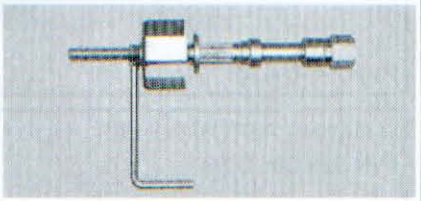

Page: 309, 311, 313–314

QRS HUB TORQUING TOOL
(P/N 529 036 147)



Page: 323, 330

SHOCK RETAINER TOOL
(P/N 529 035 769)

Page: 408

SHOCK WRENCH
(P/N 529 035 727)

Page: 408

www.midwestmanuals.com

SLIDER SHOE FORK
(P/N 529 005 500)



Page: 308, 314

SLIDING HALF BUSHING REMOVER/INSTALLER
(P/N 529 035 931)

Page: 311, 313

SMALL BUSHING PULLER/LARGE INSTALLER
(P/N 529 031 200)

Page: 311

SMALL HOSE PINCHER
(P/N 295 000 076)

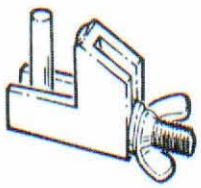

Page: 201, 217

SPRING INSTALLER/REMOVER
(P/N 529 035 983)



Page: 39–41

SPRING REMOVER
(P/N 529 036 007)

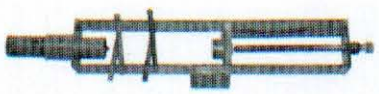

Page: 386

SUPERTITANIUM DRILL BIT 3/16"
(P/N 529 031 800)

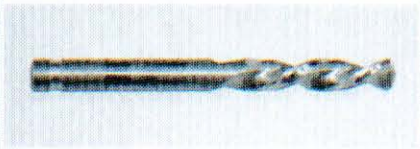

Page: 456, 467

T-HARNESS
(P/N 529 035 869)

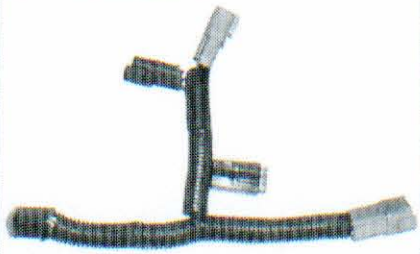

Page: 93, 158, 160, 217, 220, 263, 265, 274, 278

TDC DIAL INDICATOR
(P/N 414 104 700)

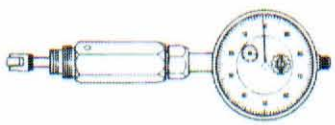

Page: 141

TENSIOMETER
(P/N 414 348 200)

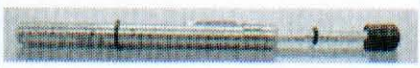

Page: 378

TEST CAP
(P/N 529 035 991)



Page: 70

TRACK CLEAT INSTALLER
(P/N 529 036 044)

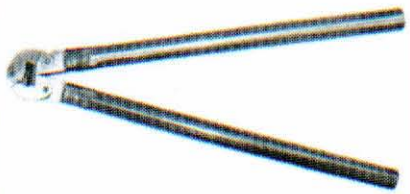

Page: 377

VACUUM PRESSURE PUMP
(P/N 529 021 800)



Page: 70, 218–219, 410

VALVE SPRING COMPRESSOR CUP
(P/N 529 036 161)

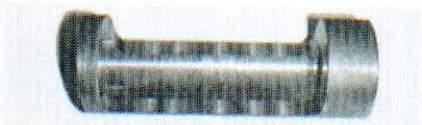

Page: 124

VALVE SPRING COMPRESSOR
(P/N 529 035 724)



Page: 124

WATER PUMP CERAMIC SEAL INSTALLER
(P/N 529 035 766)



Page: 77

www.midwestmanuals.com

www.midwestmanuals.com

MAINTENANCE CHART

A: ADJUST
C: CLEAN
I: INSPECT
L: LUBRICATION
R: REPLACE
*: To be performed by an authorized SKI-DOO dealer

PART/TASK	*10-hour or 500 km (310 mi)	Weekly or every 250 km (150 mi)	Monthly or every 800 km (500 mi)	Every year or 3 200 km (2,000 mi)	Every 2 years or 6 000 km (3,700 mi)	*Storage	*Preseason
ENGINE							
Engine motor mounts	I			I		I	
Engine seals							I
Exhaust system							I
Exhaust manifold nuts (1)	I						I
Cooling system	I						I
Coolant (2) (3)	I			I			
Engine oil (4) and filter	R	(5)					
Valves adjustment	(6)						
ENGINE MANAGEMENT SYSTEM							
EMS fault codes	I					I	
FUEL SYSTEM							
Fuel stabilizer						(7)	
Fuel filter					R		
Fuel lines, fuel rail and connections	I						I
Throttle body							I, C
Throttle cable	I						I
Air silencer prefilter (8)							I
Fuel injection system (visual inspection)				I			I
DRIVE SYSTEM							
Drive belt (9)	I	I					I
Drive pulley (10)	I		I	C		I	C
Driven pulley (11)	I		I	C		I	C
Brake fluid	I	I			R		I
Brake hose, pads and disk	I	I					I
Drive chain	A		A			A	
Chaincase oil						R	
Track (12)	A (13)						

LEGEND

(1) Retighten to specified torque.
(2) Check coolant level before each ride.
(3) Have coolant density checked at preseason preparation. Have coolant changed every 5 years.
(4) Check oil level every 500 km (300 mi).
(5) Have oil and filter changed every 5 000 km (3,000 mi), 80 hours or at storage whichever comes firts.
(6) Have valve lash inspected and adjusted every 20 000 km (12,500 mi).

—

(7) Add to fuel at storage.
(8) Check condition before each ride.

(9) Adjust drive belt height and check the tension at every belt removal.
(10) Tightening torque of drive pulley must be checked at the 10-hour inspection and every year or 3 200 km (2,000 mi) thereafter.
(11) Driven pulley preload should be checked at the 10-hour inspection and every year or 3 200 km (2,000 mi) thereafter.
(12) Check track condition before each ride.
(13) Adjust track tension and alignment as required.

www.midwestmanuals.com

A: ADJUST
C: CLEAN
I: INSPECT
L: LUBRICATION
R: REPLACE
*: To be performed by an authorized SKI-DOO dealer

PART/TASK	*10-hour or 500 km (310 mi)	Weekly or every 250 km (150 mi)	Monthly or every 800 km (500 mi)	Every year or 3 200 km (2,000 mi)	Every 2 years or 6 000 km (3,700 mi)	*Storage	*Preseason	LEGEND
STEERING								
Steering mechanism (14)	I		I, L			I, L		(14) Lubricate whenever the vehicle is used in wet conditions (wet snow, rain, puddles).
Skis and runners	I	I				I		
SUSPENSION								
Front suspension (14)	I		I			I		(14) Lubricate whenever the vehicle is used in wet conditions (wet snow, rain, puddles).
Rear suspension (14)	I		I, L			I, L		
Rear suspension stopper strap				I		I		
ELECTRICAL SYSTEM								
Spark plugs	(15)							(15) Spark plugs must be inspected or replaced every 3 years or 10 000 km (6,200 mi).
Battery	I		I			I	I	
Wiring harnesses and cables	I		I			I		
Lighting system (HI/LO beam, brake light, etc.)	I	I				I		
Engine stop switch and tether cord cap (D.E.S.S.)	I	I				I		
CHASSIS/BODY								
Headlights beam aiming				A			A	—
Engine compartment	C		C			C		
Vehicle cleaning and protection	C		C			C		

www.midwestmanuals.com

STORAGE PROCEDURE

SERVICE PRODUCTS

Description	Part Number	Page
BRP FUEL STABILIZER	413 408 600	9
BRP PLASTIC & VINYL CLEANER	413 711 200	10
SCRATCH REMOVER KIT	861 774 800	10
SUSPENSION GREASE	293 550 033	10
XP-S LUBE	293 600 016	10
XP-S SYNTHETIC GREASE	293 550 010	10

GENERAL

Proper snowmobile storage is a necessity during the summer months or when a vehicle is not being used for certain period of time.

If vehicle is not used for 3 consecutive months, proceed as follows:

- Add fuel stabilizer in fuel tank to prevent fuel deterioration. Refer to *FUEL SYSTEM* further in this section.
- Refer to storage column from *MAINTENANCE CHART* jointly with the present procedures in order to cover each and every aspect of the snowmobile storage. Any worn, broken or damaged parts must be replaced.

⚠ WARNING

Unless otherwise specified, engine should be turned off for storage procedure.

To facilitate the inspection and ensure adequate lubrication of components, it is recommended to clean the entire vehicle.

PROCEDURES

ENGINE MANAGEMENT SYSTEM

Fault Codes

1. Using B.U.D.S., verify fault codes state. Refer to *ENGINE MANAGEMENT SYSTEM* section.

FUEL SYSTEM

Fuel System Protection

With the new fuel additives, it is critical to use the BRP FUEL STABILIZER (P/N 413 408 600) or an equivalent to prevent fuel deterioration, gum formation and fuel system gumming. Follow manufacturer's instructions for proper use.

NOTICE **Fuel stabilizer should be added prior to engine lubrication to ensure fuel system components protection against varnish deposits.**

1. Pour fuel stabilizer in fuel tank.
2. Fill up fuel tank completely.
3. Ensure there is no water inside fuel tank.

NOTICE **Should any water be trapped inside fuel tank, severe internal damage will occur to the fuel injection system.**

Do not drain fuel system.

ENGINE

Engine Motor Mounts

Check if engine supports are cracked or damaged.

Check if rubber mounts are brittle, cracked or damaged.

Engine Oil and Filter Replacement

Change engine oil and oil filter. Refer to *LUBRICATION SYSTEM* subsection.

ELECTRICAL SYSTEM

Battery (if so equipped)

1. Remove battery, clean its tray and surrounding area with water and baking soda.
2. Inspect, clean and charge battery as explained in *CHARGING SYSTEM* subsection.

Wiring Harnesses, Cables and Connectors

Inspect for wear, deterioration or damage, replace defective parts if necessary.

www.midwestmanuals.com

DRIVE SYSTEM AND BRAKE

Brake Lever

Remove the brake lever pivot and apply XP-S SYNTHETIC GREASE (P/N 293 550 010) on it. Reinstall pivot and tighten its nut to 6 N•m (53 lbf•**in**).

Drive and Driven Pulleys

1. Remove drive belt.
2. Inspect and clean pulleys.
3. Spray XP-S LUBE (P/N 293 600 016) on sheaves to protect them from rust.
4. Do not reinstall drive belt.

Track

NOTE: Do not release track tension.

1. Visually inspect track for:
   - Cuts and abnormal wear
   - Broken rods
   - Broken or missing track cleats.

If track is damaged or rods are broken, replace track, refer to *TRACK* subsection.

For damaged or missing cleats, refer to *TRACK* subsection for procedure.

Chaincase

Chaincase Oil Replacement

Replace chaincase oil, refer to *CHAINCASE* subsection.

Drive Chain Adjustment

Check drive chain tension and adjust if necessary, refer to *CHAINCASE* subsection.

CHASSIS

Front Suspension

Inspect the front suspension arms for wear or damages, replace if necessary. Refer to *FRONT SUSPENSION* subsection.

Rear Suspension

1. Inspect rear suspension components for wear, deterioration or damage, replace defective parts if necessary.
2. Inspect strap for wear or cracks.
3. Check bolt and nut securing strap for tightness. If loose, inspect strap holes for deformation. Replace strap if necessary.
4. Lubricate rear arm at grease fittings using SUSPENSION GREASE (P/N 293 550 033).

Steering Mechanism

Inspect all components for tightness.

Skis and Runners

Inspect skis and runners for wear, deterioration or damage, replace if necessary.

VEHICLE

Vehicle Cleaning

Keep engine compartment clean of grass, twigs, cloth, etc. These are combustible under certain conditions.

To clean the vehicle, do not use high pressure washers (like the ones found in car washes) as it may damage certain parts of the vehicle.

To clean the vehicle, proceed as follows:

1. Rinse the vehicle thoroughly with water to remove loose dirt.
2. Using a soft clean cloth, wash the vehicle with water mixed with a mild detergent, such as soap specially formulated for motorcycles or automobiles.
3. While washing the vehicle, check for grease or oil. If necessary, use BRP PLASTIC & VINYL CLEANER (P/N 413 711 200) or a mild automotive degreaser. Follow thoroughly the manufacturer's instructions.

NOTICE **Do not use heavy duty cleaner on decals or vinyl.**

4. Dry the vehicle with a chamois or a soft towel.

⚠ WARNING

Do not apply a vinyl or plastic protector on the seat as the surface will become slippery and the operator or the passenger may slip off the vehicle.

Windshield Polishing

Windshield can be polished using SCRATCH REMOVER KIT (P/N 861 774 800) or a plastic cleaner specially formulated for these special surfaces.

NOTICE **Do not clean the windshield with alkaline or acid cleaner, gasoline or solvent to avoid windshield damage.**

Vehicle Waxing

Apply only nonabrasive wax safe for clear coats paints on glossy finishes.

Avoid applying wax on mat surfaces.

www.midwestmanuals.com

Vehicle Protection

1. Block air intake and muffler with clean rags.
2. Touch up all metal spots where paint has been scratched off.
3. Cover the vehicle with a permeable material. Avoid using plastic or similar non-breathing, coated materials that restrict air flow and allow heat and moisture to accumulate.
4. Store vehicle in a dry unheated area, away from sunlight, with a small amount of daily temperature variation.
5. Lift rear of vehicle until track is clear of the ground. Install on a snowmobile mechanical stand.

www.midwestmanuals.com

www.midwestmanuals.com

PRESEASON PREPARATION

SERVICE PRODUCTS

Description	Part Number	Page
PULLEY FLANGE CLEANER	413 711 809	13–14
XP-S SYNTHETIC GREASE	293 550 010	14

GENERAL

Proper vehicle preparation is necessary after the summer months or when a vehicle has not been used for more than three months.

Refer to preseason preparation column from *MAINTENANCE CHART* jointly with the present procedures in order to cover each and every aspect of the snowmobile preseason preparation.

Any worn, broken or damaged parts found should be replaced.

⚠ WARNING

Unless otherwise specified, engine should be turned off for preparation procedure.

PROCEDURES

ENGINE

Exhaust Manifold

Check exhaust manifold nuts for looseness. Retorque if necessary.

Check exhaust manifold for cracks or damages.

Exhaust pipe

Check exhaust pipe for cracks or damages.

Verify exhaust pipe shields for damages.

Muffler

Remove rags that were installed during storage preparation.

Cooling System

Inspect cooling system for leaks, refer to *COOLING SYSTEM* subsection.

Check coolant level in coolant reservoir.

Check coolant density.

PTO Cover Oil Seal

Make sure there is no oil coming out from PTO cover oil seal, if so replace seal. Refer to *CYLINDER BLOCK* subsection.

Air Intake Silencer Filter

Ensure that air intake silencer filter is properly installed and in good condition.

Rinse filter with fresh water to clean or replace if damaged.

FUEL SYSTEM

Inspect fuel system for leaks. Refer to *FUEL TANK AND FUEL PUMP* subsection.

Throttle Body

Using the PULLEY FLANGE CLEANER (P/N 413 711 809), clean the throttle plate and throttle body bores.

NOTE: To ease cleaning, remove throttle body from intake manifold and air intake silencer without disconnecting throttle cable and coolant hoses.

Throttle Lever

Make sure that throttle lever operates freely, adjust and lubricate throttle cable as required, refer to *FUEL SYSTEM* section.

ELECTRICAL SYSTEM

Battery

Install a fully charged battery.

Lighting System

Check lights operation.

Check headlights aligment. Adjust beam aiming if necessary.

Engine Stop Switch

Check engine stop switch operation.

Accessories

Check the operation of all accessories.

www.midwestmanuals.com

DRIVE SYSTEM AND BRAKE

Drive and Driven Pulley

Clean drive and driven pulleys sheaves with PULLEY FLANGE CLEANER (P/N 413 711 809).

Check tightening torque of drive pulley. Refer to *DRIVE PULLEY* subsection.

Check driven pulley preload. Refer to *DRIVEN PULLEY AND COUNTERSHAFT* subsection.

Drive Belt

Inspect belt for cracks, fraying or abnormal wear. Replace if necessary.

Make sure to install the proper belt with arrow printed on belt pointing front of vehicle.

Drive Axle End Bearing (Brake Side)

Remove the disc brake protector cover and make a visual inspection of the bearing seal to ensure it is not damaged. Refer to *DRIVE AXLE* subsection.

Brake

Brake Lever

Remove the brake lever pivot and apply XP-S SYNTHETIC GREASE (P/N 293 550 010) on it. Reinstall pivot and tighten its nut to 6 N•m (53 lbf•**in**).

Brake Fluid

Check brake fluid in reservoir for proper level. Add fluid (DOT 4) as required.

NOTICE **Use only DOT 4 brake fluid from a sealed container. An opened container may be contaminated or may have absorbed moisture from the air.**

Brake Hose, Pads and Disk

Inspect brake hose for wear, deterioration or damage.

Inspect brake pads for proper thickness. Refer to *BRAKE* subsection.

Remove any rust built-up on braking surfaces. Clean brake disk braking surfaces with PULLEY FLANGE CLEANER (P/N 413 711 809).

Track

Verify track tension and alignment, refer to *TRACK* subsection.

NOTE: Track tension and alignment are interrelated. Do not adjust one without checking the other. Track tension procedure must be carried out prior to track alignment.

www.midwestmanuals.com

ENGINE REMOVAL AND INSTALLATION

SERVICE TOOLS

Description	Part Number	Page
ENGINE LIFTING TOOL	529 036 151	18, 23, 27

SERVICE PRODUCTS

Description	Part Number	Page
LOCTITE 243 (BLUE)	293 800 060	26

Midwest Manuals
sales@midwestmanuals.com
www.midwestmanuals.com

www.midwestmanuals.com

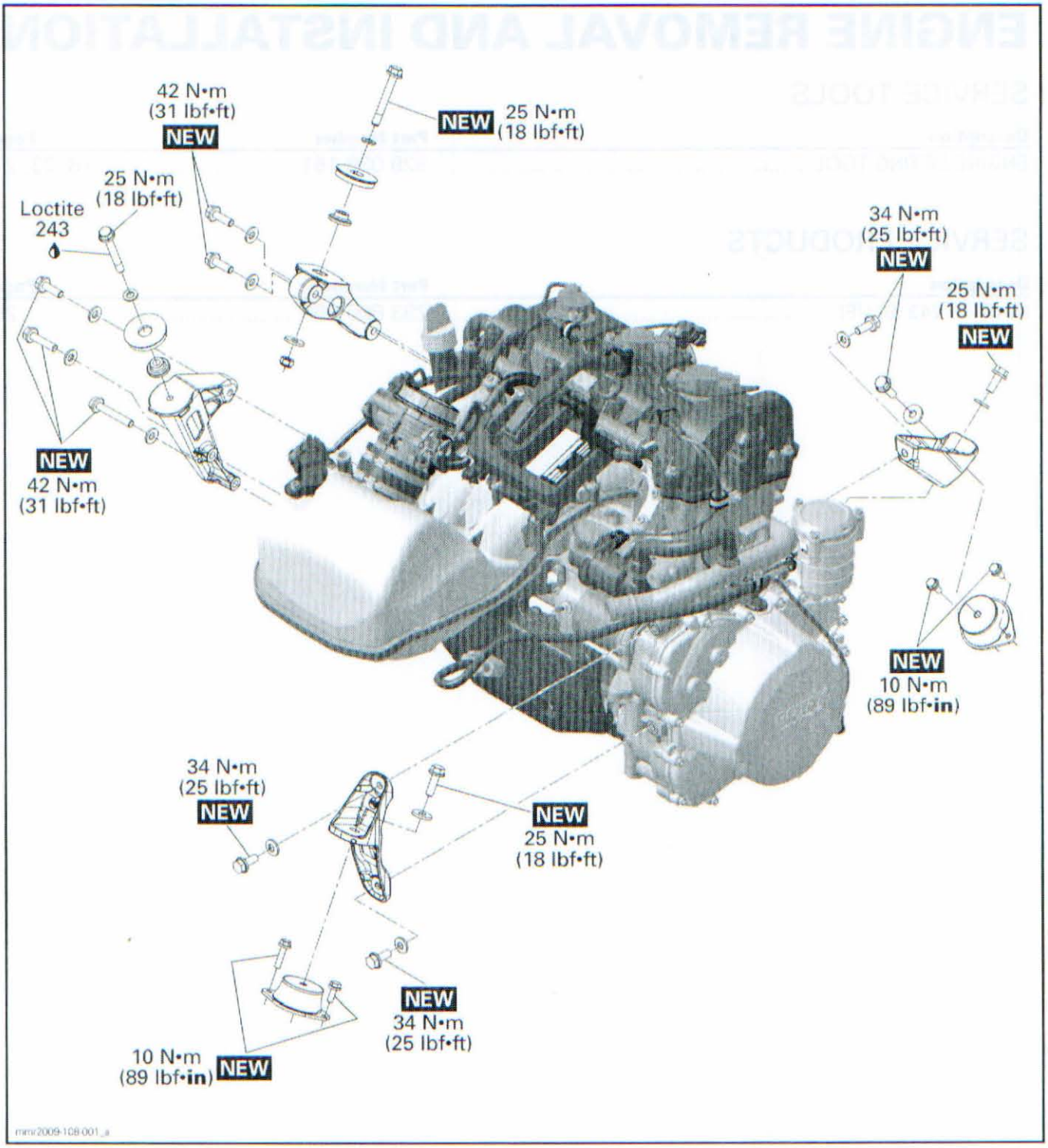

www.midwestmanuals.com

GENERAL

During assembly/installation, use the torque values and service products as in the exploded view.

Clean threads before applying a threadlocker. Refer to *SELF-LOCKING FASTENERS* and *LOCTITE APPLICATION* at the beginning of this manual for complete procedure.

⚠ WARNING

Torque wrench tightening specifications must be strictly adhered to.
Locking devices (e.g.: locking tabs, elastic stop nuts, cotter pin, etc.) must be replaced with new ones.

Hoses, cables or locking ties removed during a procedure must be reinstalled as per factory standards.

NOTICE **Locking ties removed during a procedure must be replaced and installed at the same location.**

PROCEDURES

ENGINE

Engine Removal

1. Place vehicle at workstation that will have access to an engine-lifting hoist.
2. Refer to *BODY* subsection and remove the following:
   - LH and RH side panels
   - Hood
   - Front bottom pan cover
   - Console
   - Gauge support
   - Seat(s).
3. Remove the fuel tank. Refer to *FUEL TANK AND FUEL PUMP* subsection.
4. Remove the negative (–) cable from battery.

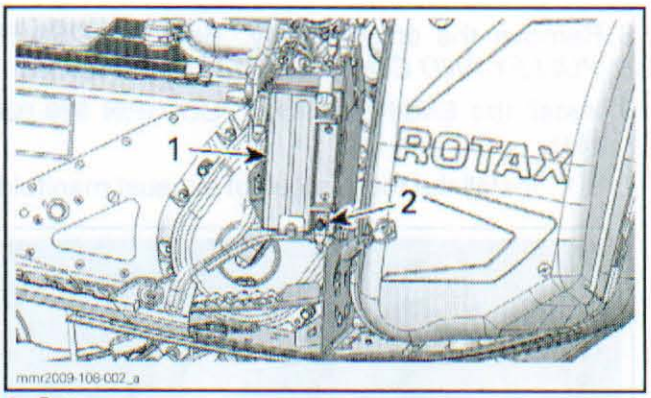

1. *Battery*
2. *Negative cable*

5. Remove muffler, exhaust pipe and exhaust manifold. Refer to *EXHAUST SYSTEM* subsection.

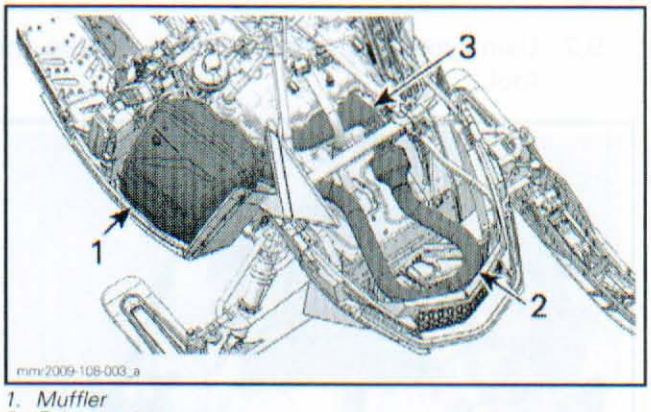

1. *Muffler*
2. *Exhaust pipe*
3. *Exhaust manifold*

6. Remove the cooling drain screw located on water pump to drain the cooling system. Refer to *COOLING SYSTEM* subsection for complete procedure.

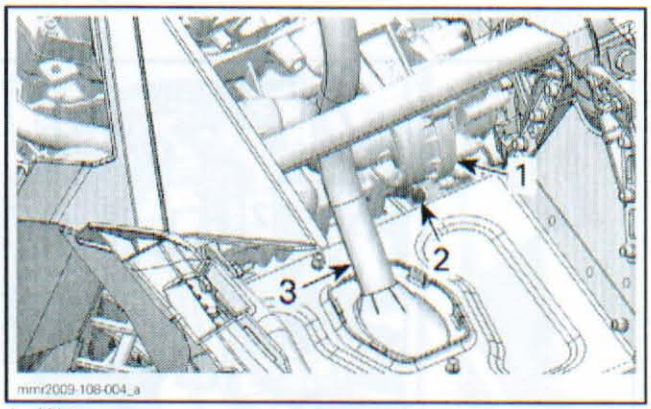

1. *Water pump*
2. *Drain screw*
3. *Steering column*

7. Remove the drive pulley. Refer to *DRIVE PULLEY* subsection.

www.midwestmanuals.com

8. Remove the driven pulley. Refer to *DRIVEN PULLEY AND COUNTERSHAFT* subsection.
9. Install the ENGINE LIFTING TOOL (P/N 529 036 151).
   9.1 Install the tool instead of exhaust manifold.

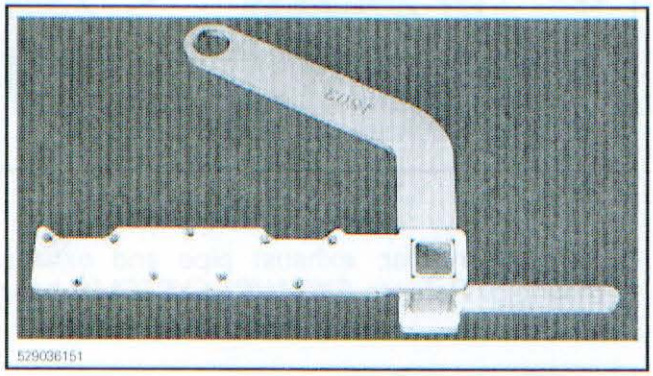

   9.2 Using exhaust manifold nuts, secure the tool.

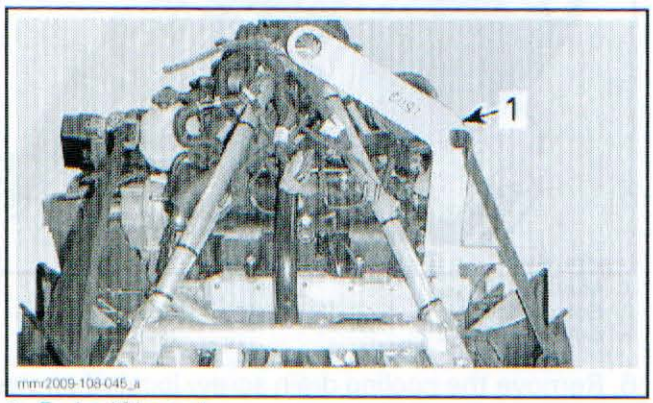

1. Engine lifting tool

   9.3 Install a hoist.
10. Behind chaincase, disconnect the engine inlet coolant hose.

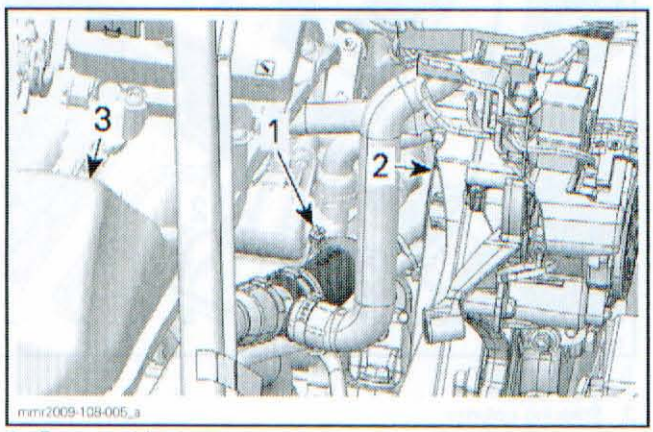

1. Remove this clamp
2. Chaincase
3. Intake manifold

11. Disconnect the engine coolant outlet hose from thermostat.

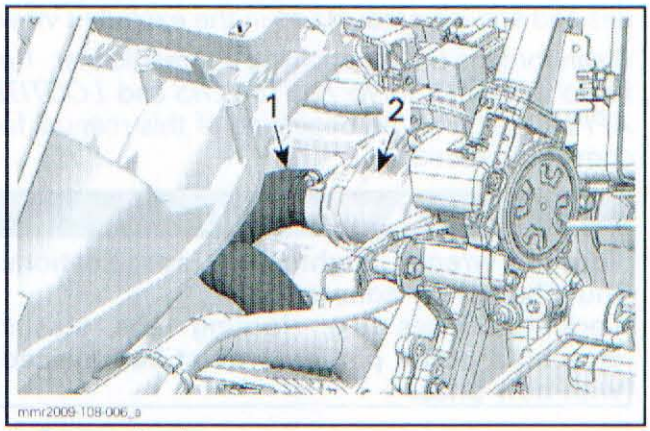

1. Remove this clamp
2. Thermostat

12. Remove starter cable from starter.

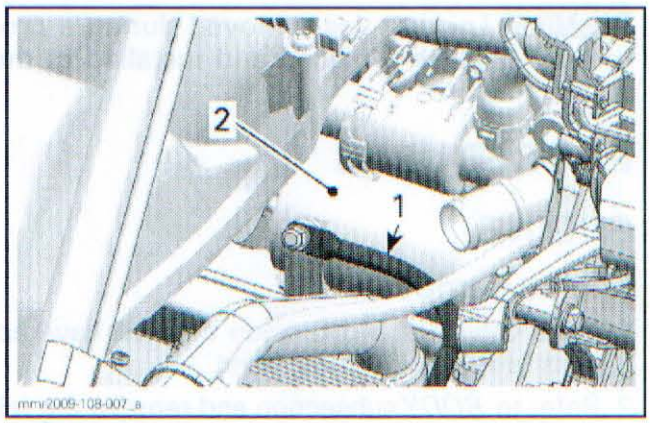

1. Starter cable
2. Starter

13. Remove the RH rear engine rubber mount screw.

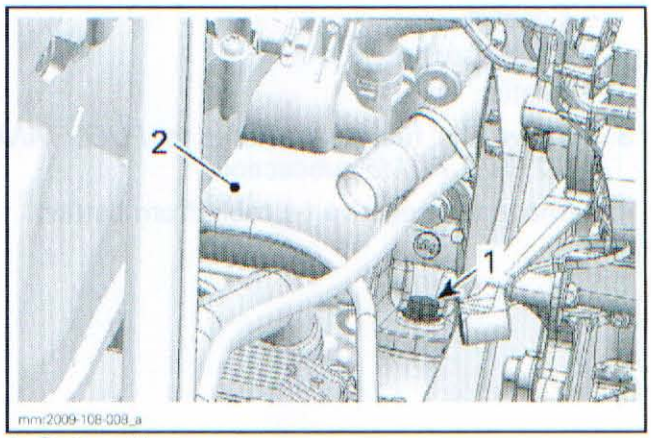

1. Engine rubber mount screw
2. Starter

14. Unplug the magneto connector from the voltage regulator.

www.midwestmanuals.com

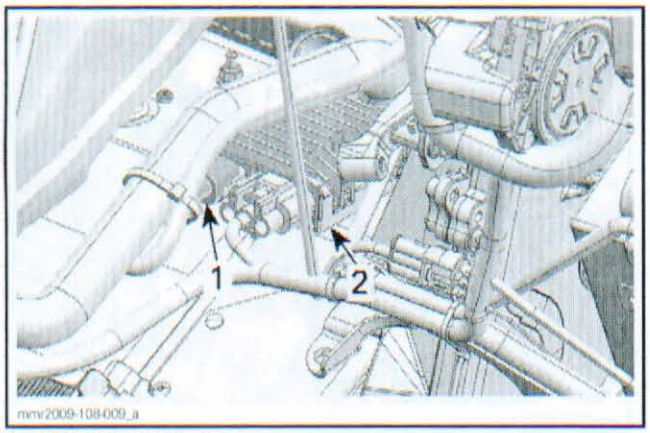

1. Magneto connector
2. Voltage regulator

15. Unplug the connector B from the ECM.

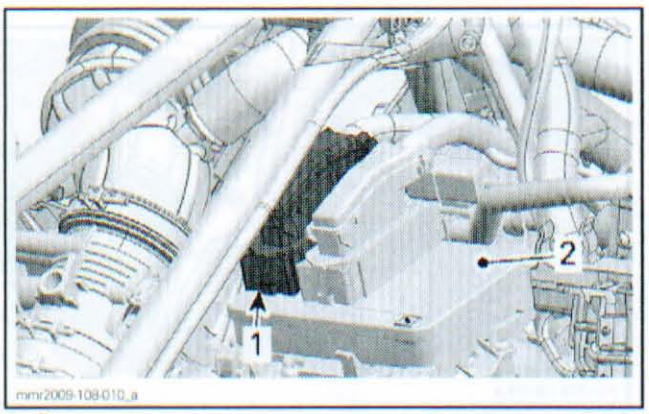

1. B connector
2. ECM

16. Unplug the engine connector.

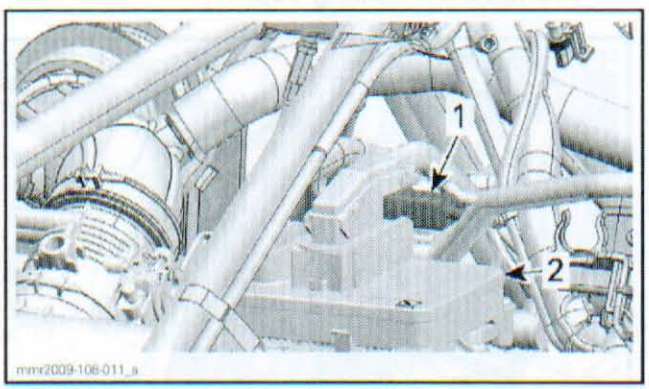

1. Engine connector
2. ECM

17. Cut locking ties securing the harness of ECM connector B to ECM support.
18. Detach the throttle cable from the throttle body.

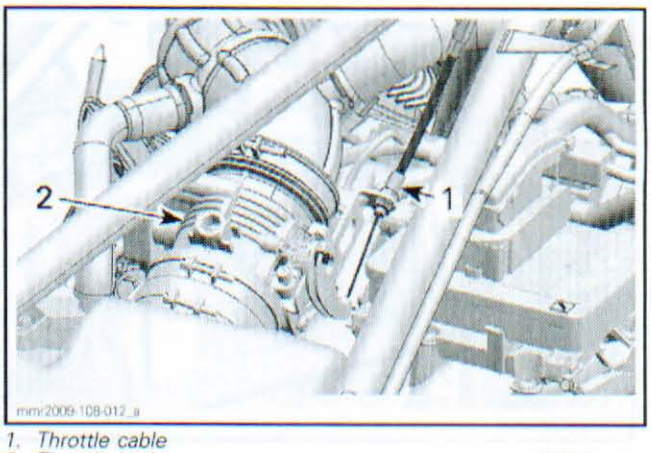

1. Throttle cable
2. Throttle body

19. Disconnect the throttle body heating hose from the coolant reservoir.

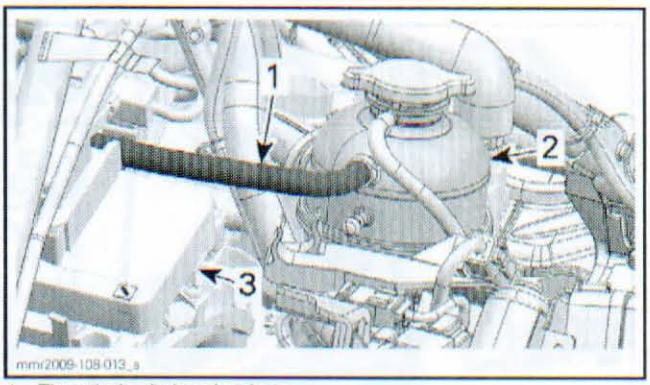

1. Throttle body heating hose
2. Coolant reservoir
3. ECM

20. Disconnect hose from breather.

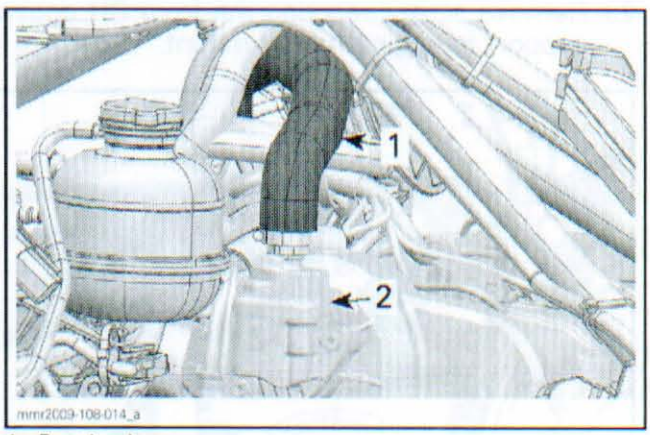

1. Breather hose
2. Breather

21. Remove breather from engine.

www.midwestmanuals.com

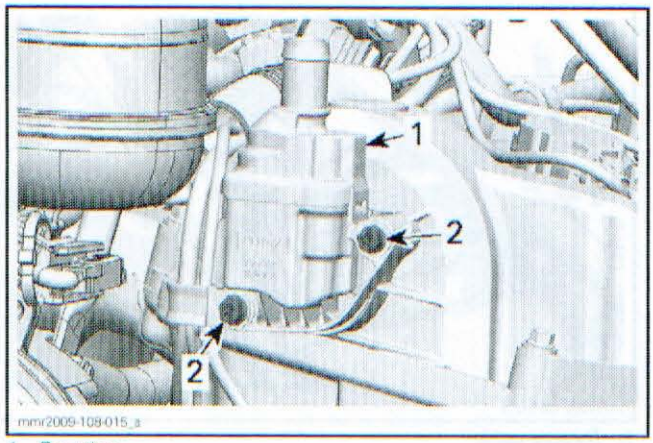

1. *Breather*
2. *Remove these screws*

22. Remove screw securing the camshaft position sensor (CAPS) then move the sensor aside.

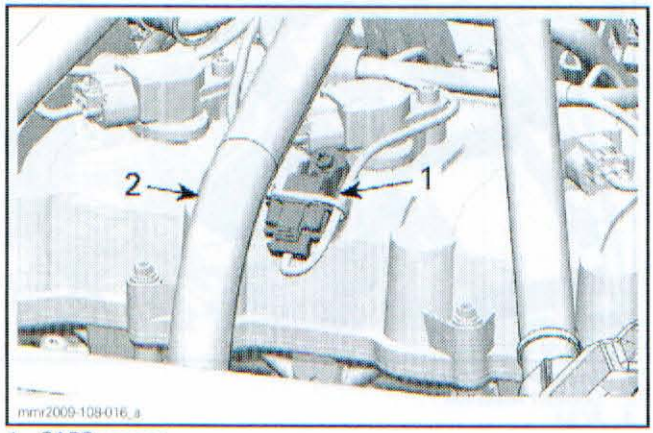

1. *CAPS sensor*
2. *Steering column*

23. Remove screw securing the front RH engine support to engine rubber mount.

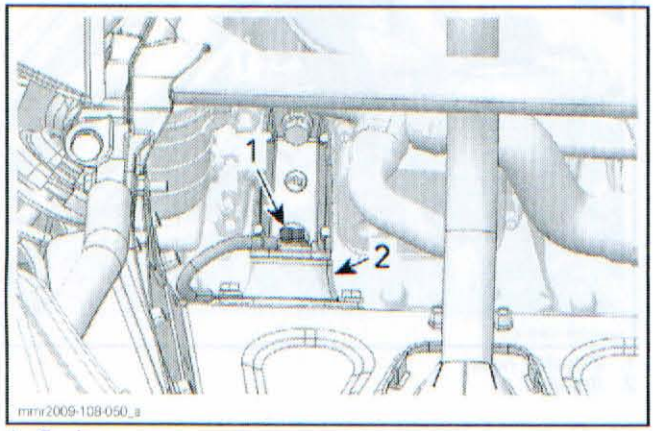

1. *Engine support screw*
2. *Engine rubber mount*

24. Remove the caliper protector.

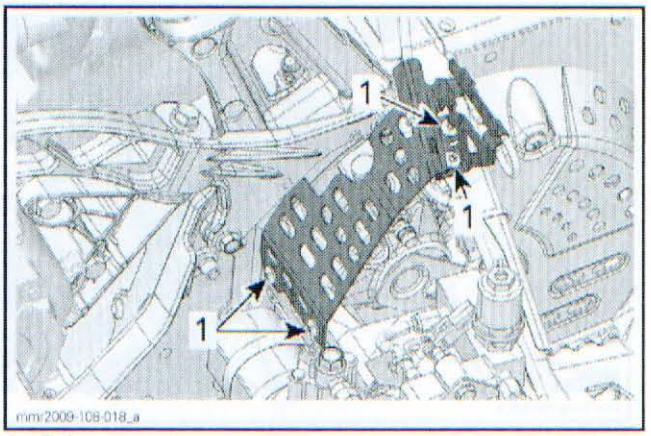

1. *Caliper protector screws*

25. Remove the Banjo fitting then move the brake hose aside. Discard sealing washers.

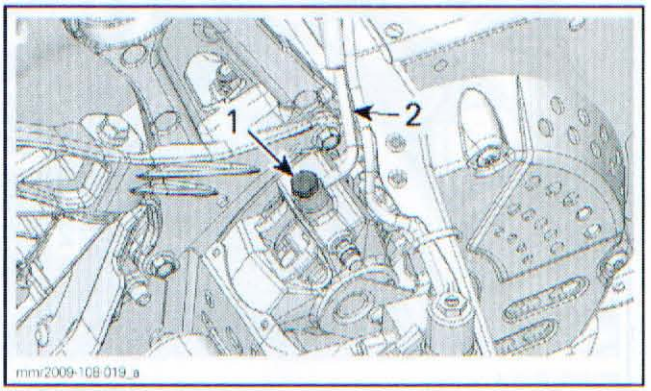

1. *Banjo fitting*
2. *Brake hose*

26. Remove the screw securing the top of the countershaft bearing support.

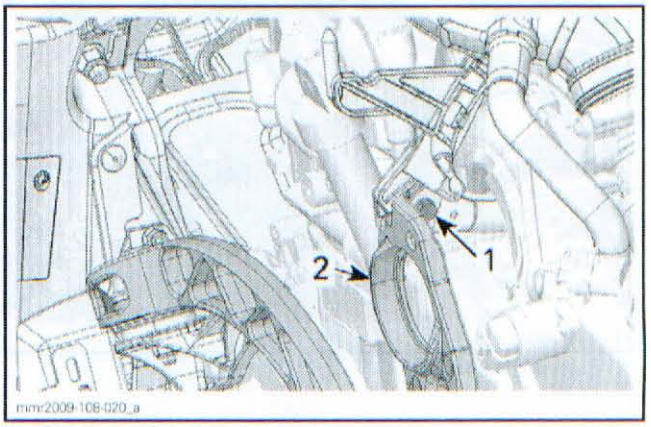

1. *Countershaft bearing support upper screw*
2. *Countershaft bearing support*

27. Loosen nut retaining the bottom of countershaft bearing support to frame.

www.midwestmanuals.com

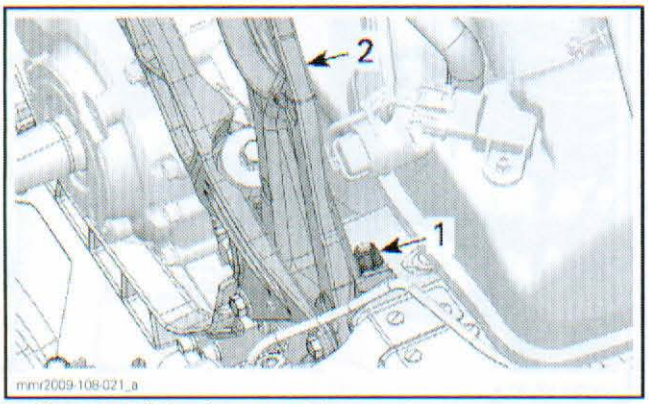

1. *Countershaft bearing support lower nut*
2. *Countershaft bearing support*

28. Remove both screws retaining the brace and the countershaft bearing support to frame.

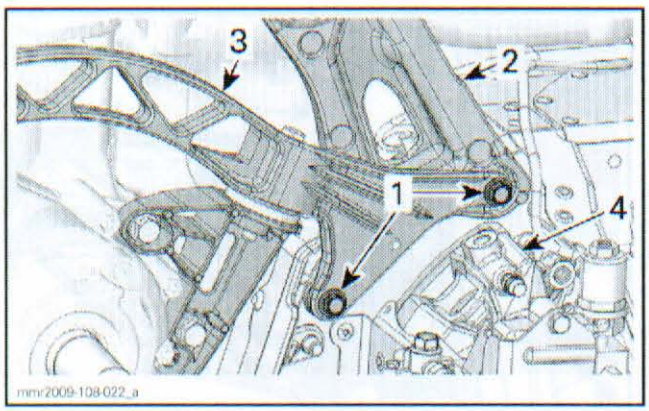

1. *Remove these screws*
2. *Countershaft bearing support*
3. *Brace*

29. Remove screws and washers securing the rear engine support to engine.

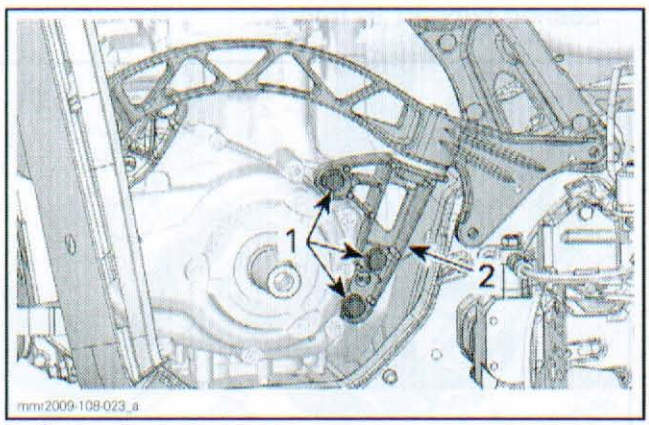

1. *Rear engine support screws*
2. *Rear engine support*

30. Remove screw and washer retaining brace to frame (front engine side).

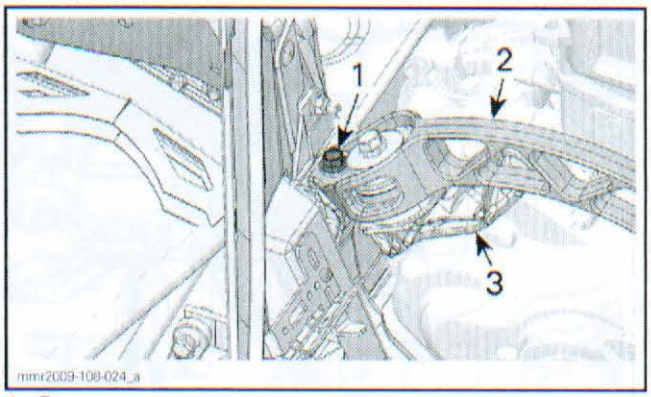

1. *Brace screw*
2. *Brace*
3. *Front engine support*

31. Unscrew the engine front rubber mount.

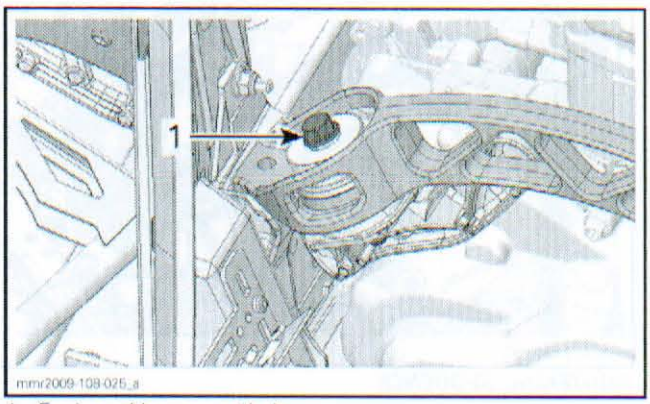

1. *Engine rubber mount bolt*

32. Remove the brace with countershaft bearing support and rear engine support.
33. Lift engine and slide it out of vehicle.

Engine Installation

To install the engine, reverse the removal procedure. However, pay attention to the following.

1. Install **NEW** self-locking screws where required, refer to exploded view at the beginning of this section.
2. Install all retaining fasteners (bolt, screw and nut) before beginning the tightening sequence.
3. Tighten fasteners in this order:
   3.1 LH rear engine support screws.

www.midwestmanuals.com

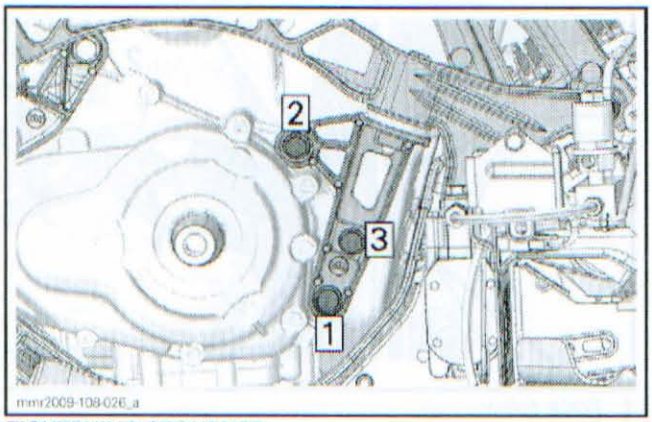

TIGHTENING SEQUENCE

3.2 Brace retaining screws.

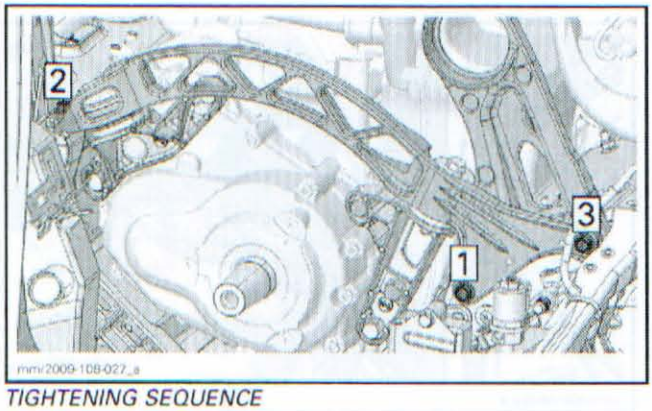

TIGHTENING SEQUENCE

3.3 RH rear engine rubber mount screw.

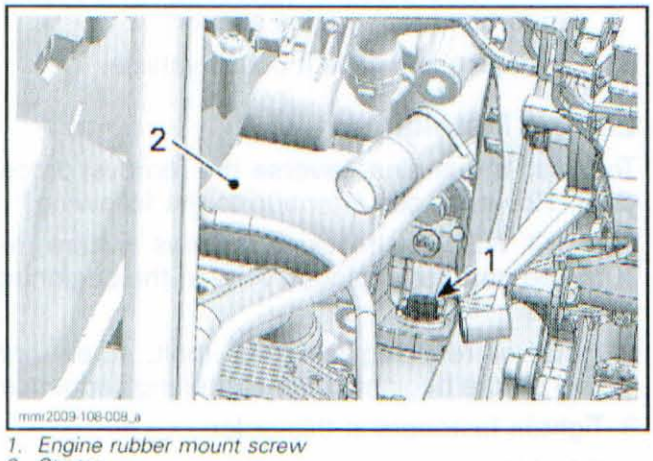

1. *Engine rubber mount screw*
2. *Starter*

3.4 RH front engine support screw.

NOTE: Do not forget the ground cable.

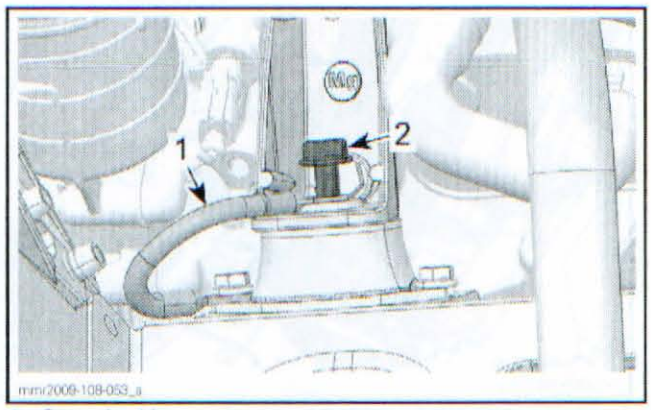

1. *Ground cable*
2. *Engine support screw*

3.5 LH front engine rubber mount bolt. Note position if parts.

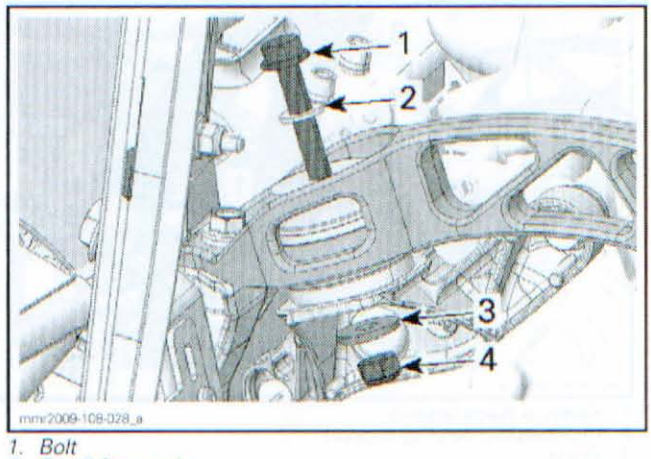

1. *Bolt*
2. *Small flat washer*
3. *Large flat washer with Teflon*
4. *Nut*

4. Tighten lower nut retaining the countershaft bearing support to frame.

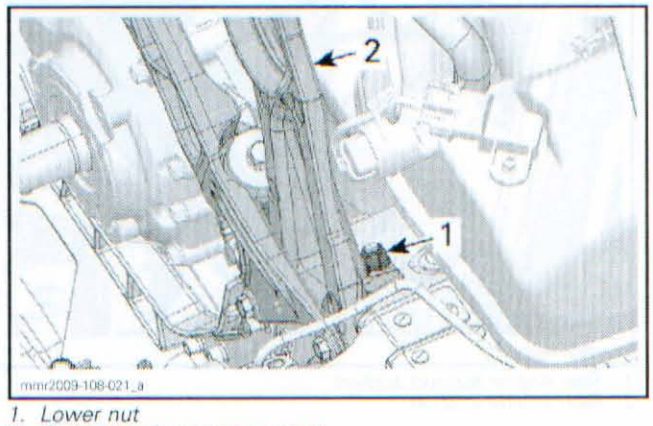

1. *Lower nut*
2. *Countershaft bearing support*

5. Install the upper screw securing the countershaft bearing support.

www.midwestmanuals.com

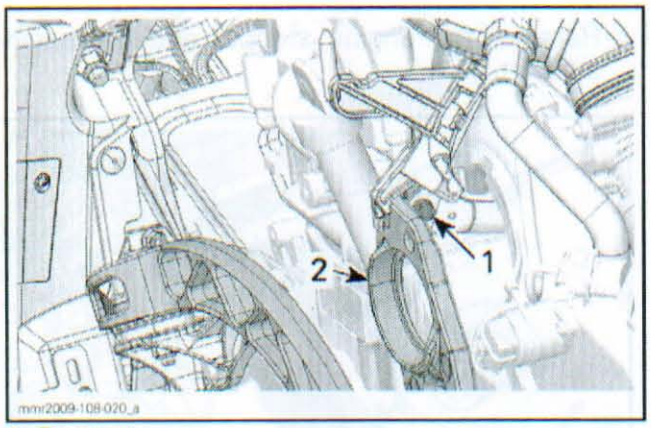

1. *Top screw*
2. *Countershaft bearing support*

6. Install all other removed parts.

ENGINE SUPPORTS

Engine Support Inspection

Check if engine supports are cracked, bent or damaged. Replace if necessary.

Engine Support Removal

NOTE: Remove the exhaust manifold and install the ENGINE LIFTING TOOL (P/N 529 036 151) before beginning the engine support removal procedure.

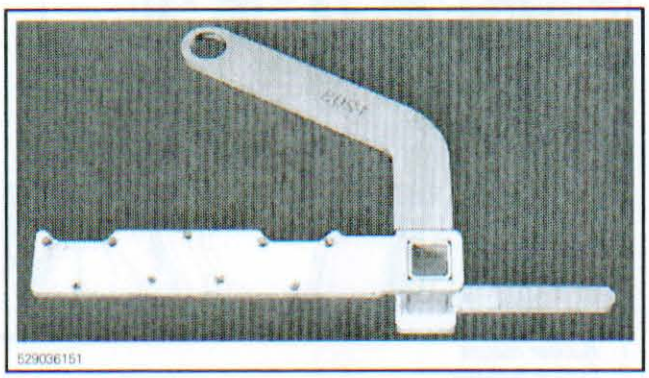

PTO Side Front Engine Support

1. Remove drive and driven pulleys. Refer to *DRIVE SYSTEM AND BRAKE* section.
2. Remove and discard bolt securing the engine rubber mount to front engine support.

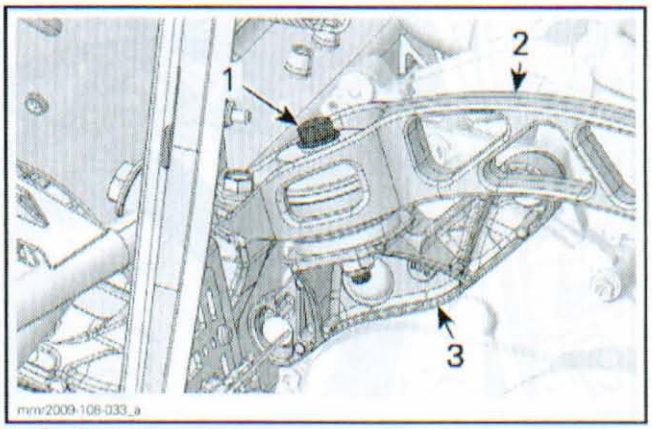

1. *Engine rubber mount bolt*
2. *Brace*
3. *Engine support*

3. Remove screws and washers securing the front engine support to engine. To reach the front screw, use the following tools:
   - A 1/4" drive ratchet
   - A long extension adaptor
   - An universal joint
   - A short 13 mm socket.

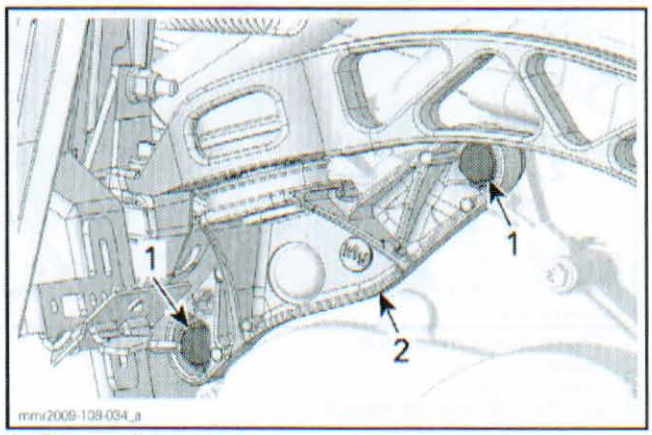

1. *Front engine support screws*
2. *Engine support*

4. Discard engine support screws.
5. Remove the engine stopper and the engine support.

www.midwestmanuals.com

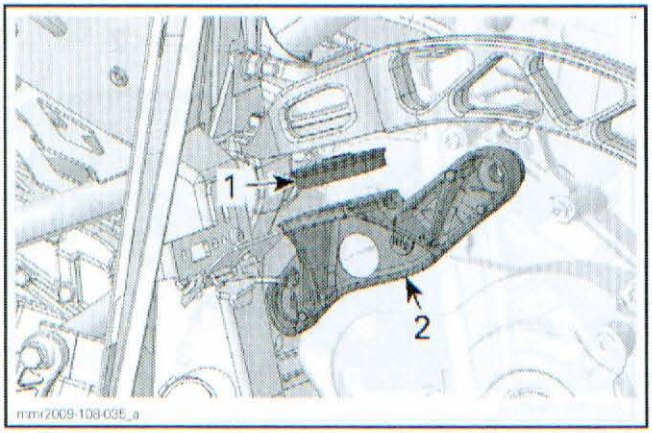

1. *Engine stopper*
2. *Front engine support*

PTO Side Rear Engine Support

1. Remove drive and driven pulleys. Refer to *DRIVE SYSTEM AND BRAKE* section.
2. Loosen bolt securing the rear engine rubber mount to rear engine support.

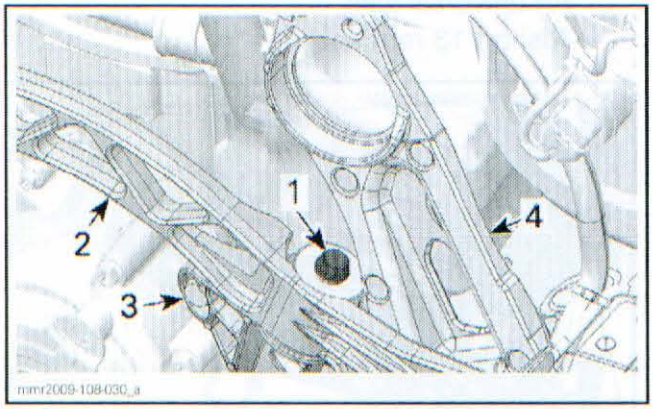

1. *Engine rubber mount bolt*
2. *Brace*
3. *Engine support*
4. *Countershaft bearing support*

3. Remove screws and washers securing the rear engine support to engine. Discard engine support screws.

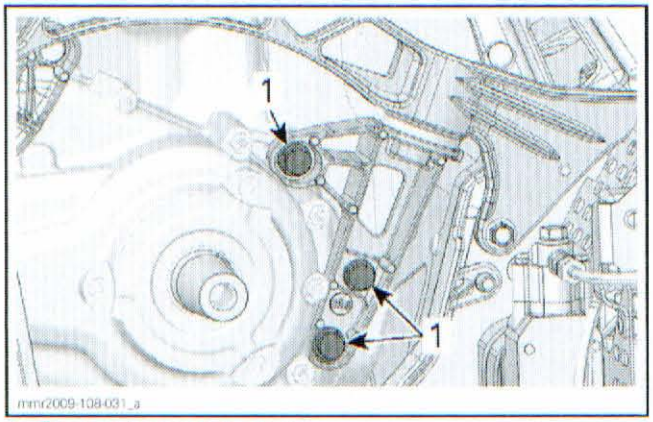

1. *Rear engine support screws*

4. Remove the engine stopper and the engine support.

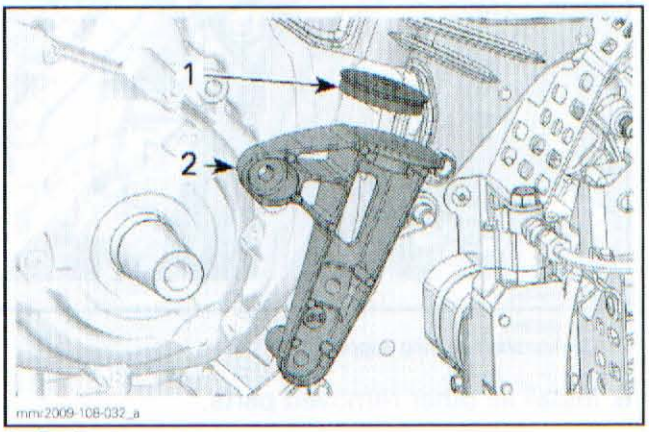

1. *Engine stopper*
2. *Rear engine support*

MAG Side Front Engine Support

1. Remove exhaust pipe to make room. Refer to *EXHAUST SYSTEM* subsection.
2. Remove and discard screw securing the ground cable and the front engine support to engine rubber mount.

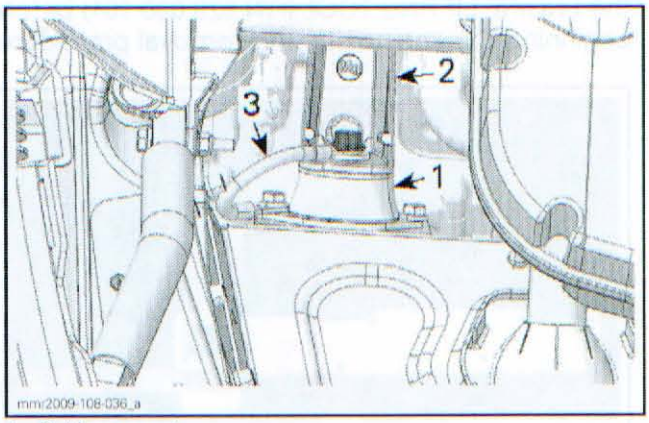

1. *Rubber mount*
2. *Engine support*
3. *Ground cable*

3. Remove and discard both screws retaining the engine support to engine.

www.midwestmanuals.com

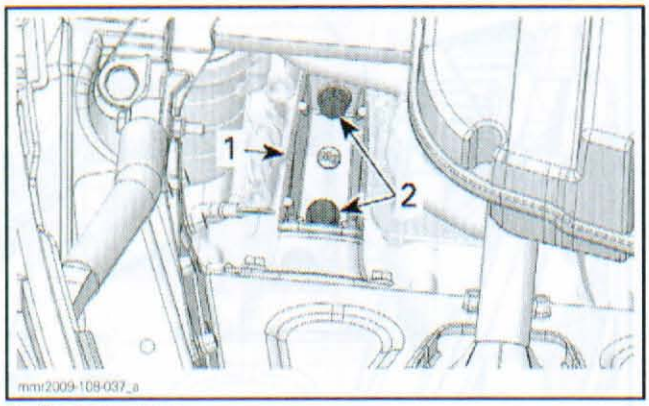

1. Engine support
2. Engine support screws

4. Remove engine support.

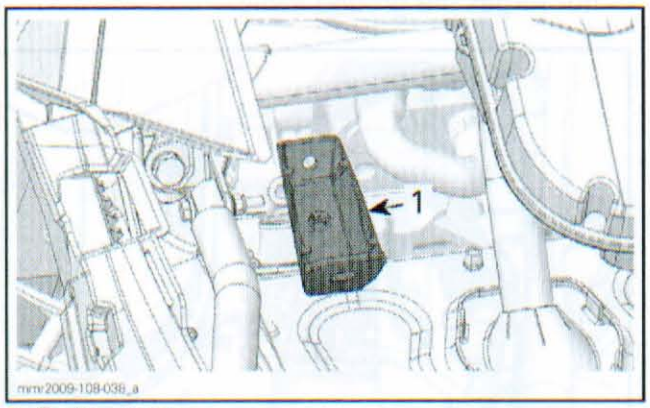

1. Engine support

MAG Side Rear Engine Support

1. Remove engine from vehicle. Refer to *ENGINE REMOVAL* in this subsection.
2. Remove and discard both engine support screws.

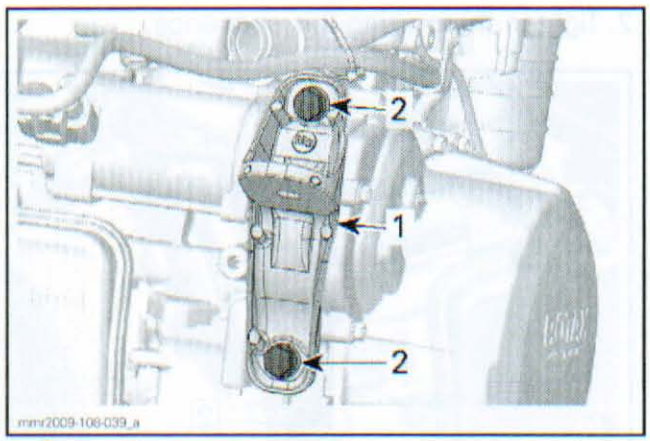

1. Engine support
2. Engine support screws

Engine Support Installation

PTO Side Front Engine Support

1. Install the engine stopper and bushing.

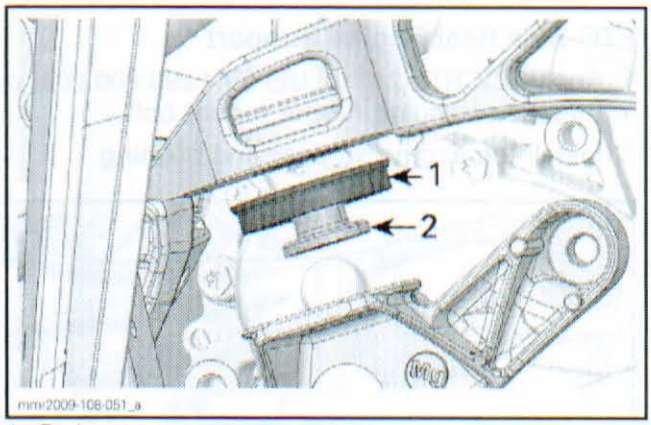

1. Engine stopper
2. Engine stopper bushing

2. Install loosely 2 **NEW** engine support screws and a **NEW** engine rubber mount bolt.
3. Tighten the lower engine support screw then the upper one.

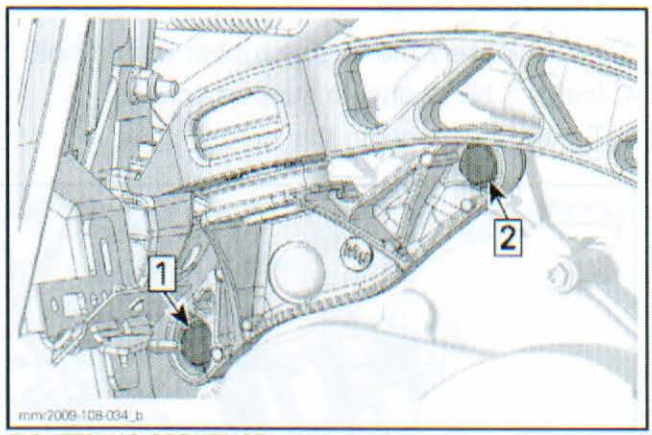

TIGHTENING SEQUENCE

4. Make sure bolt and washer are installed in proper order then tighten the engine rubber mount bolt.

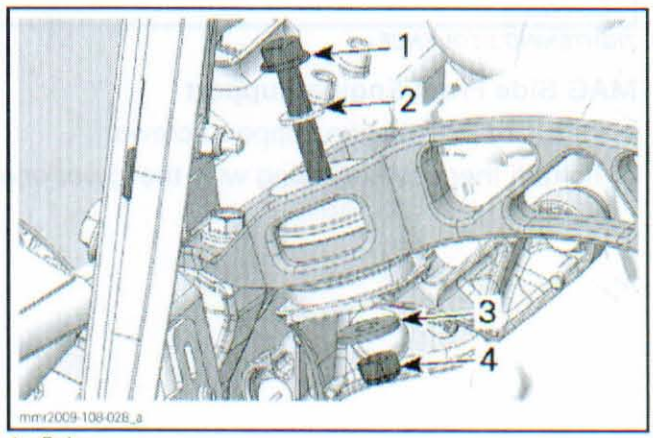

1. Bolt
2. Small flat washer
3. Large flat washer
4. Nut

www.midwestmanuals.com

PTO Side Rear Engine Support

1. Apply LOCTITE 243 (BLUE) (P/N 293 800 060) on threads of engine rubber mount bolt.
2. Install the engine stopper and bushing.

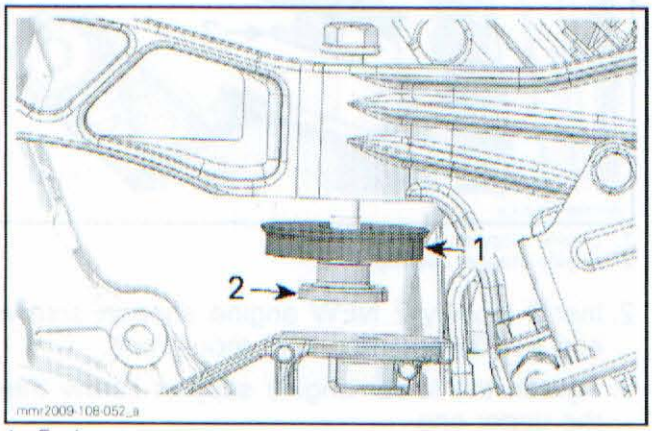

1. *Engine stopper*
2. *Engine stopper bushing*

3. Install loosely the engine rubber mount bolt.
4. Install 3 **NEW** engine support screws.
5. Tighten fasteners in this order.

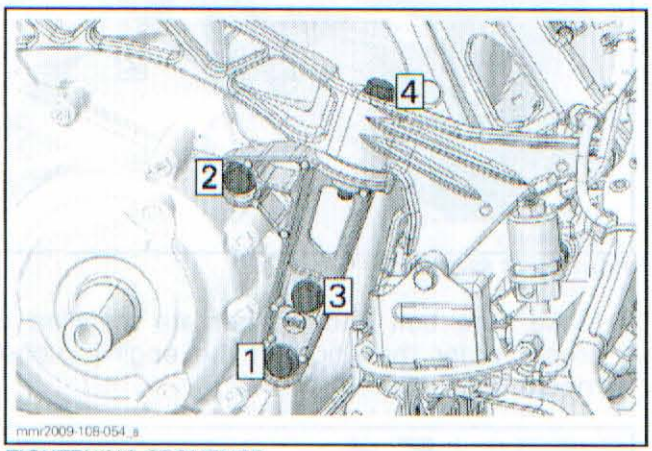

TIGHTENING SEQUENCE

MAG Side Front Engine Support

1. Install 2 **NEW** engine support screws.
2. Tighten them by beginning with the lower one.

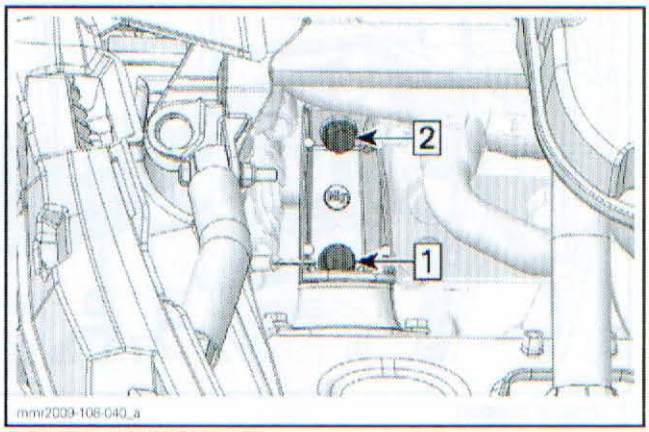

TIGHTENING SEQUENCE

3. Install a **NEW** engine rubber mount screw. Do not forget the ground cable.

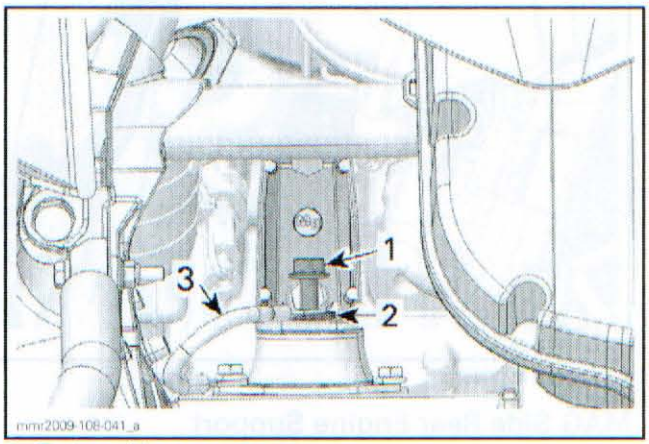

1. *Engine rubber mount screw*
2. *Washer*
3. *Ground cable*

MAG Side Rear Engine Support

1. Install 2 **NEW** engine support screws.
2. Tighten them using this sequence.

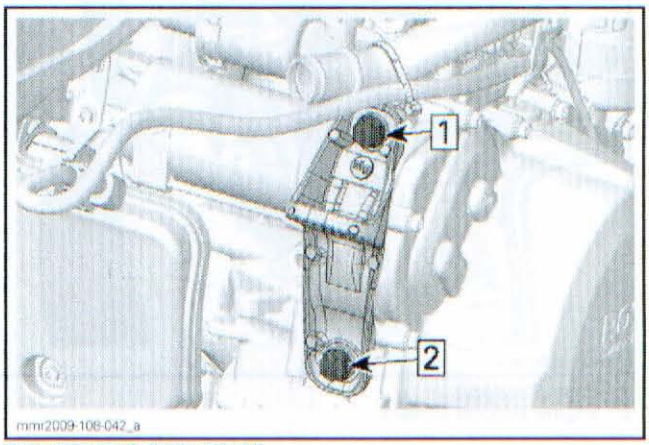

TIGHTENING SEQUENCE

3. Install the engine into vehicle. Refer to *ENGINE INSTALLATION* in this subsection.

www.midwestmanuals.com

ENGINE RUBBER MOUNT

Engine Rubber Mount Inspection

Check rubber mounts. Replace them if brittle, cracked or damaged.

Engine Rubber Mount Removal

NOTE: Remove the exhaust manifold and install the ENGINE LIFTING TOOL (P/N 529 036 151) before beginning the engine rubber mount removal procedure.

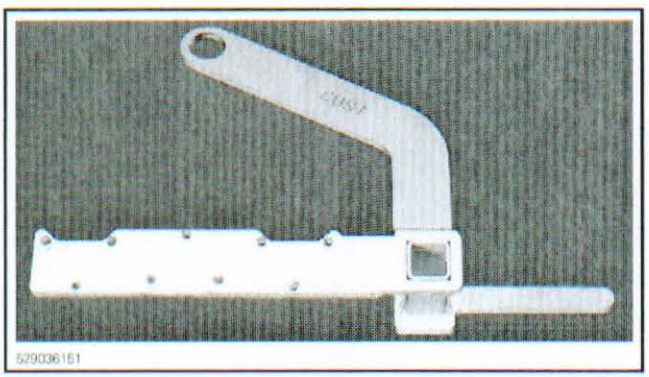

PTO Side Engine Rubber Mounts

The engine rubber mounts located on the brace are not available separately. Replace the brace when an engine rubber mount must be replaced. Refer to *PTO SIDE BRACE* in *FRAME* subsection.

MAG Side Front Engine Rubber Mount

1. Remove the exhaust pipe. Refer to *EXHAUST SYSTEM* subsection.
2. Remove and discard screw securing the ground cable and the front engine support to engine rubber mount.

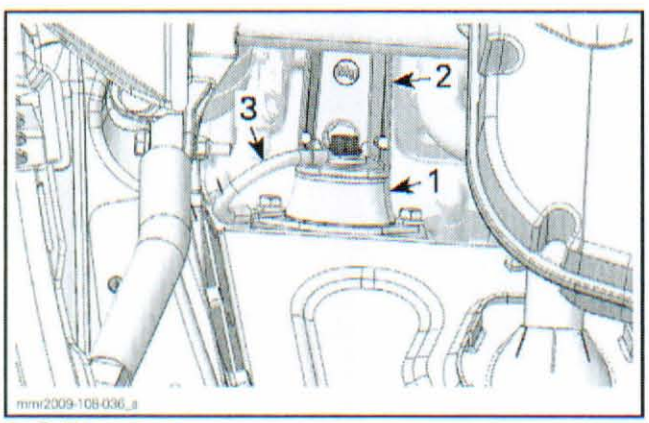

1. *Rubber mount*
2. *Engine support*
3. *Ground cable*

3. Remove screws securing the engine rubber mount to frame.

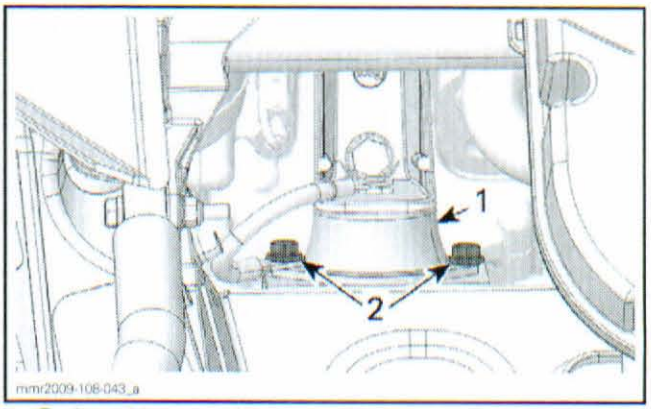

1. *Engine rubber mount*
2. *Retaining screws*

4. Remove the engine rubber mount.

MAG Side Rear Engine Rubber Mount

1. Remove engine from vehicle. Refer to *ENGINE REMOVAL* in this subsection.
2. Remove and discard both engine rubber mount screws.

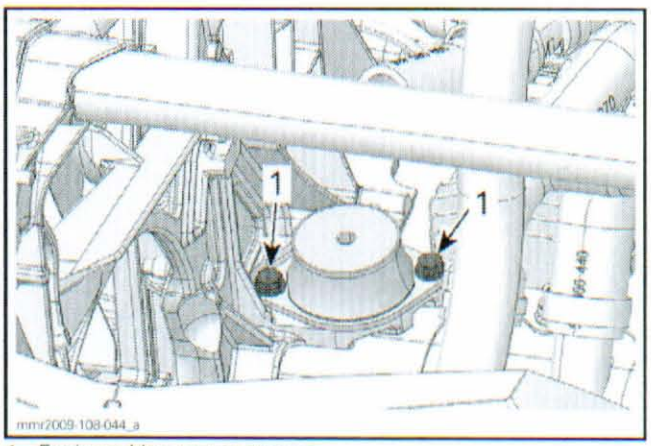

1. *Engine rubber mount screws*

Engine Rubber Mount Installation

The installation is the reverse of the removal procedure.

www.midwestmanuals.com

www.midwestmanuals.com

AIR INTAKE SYSTEM

SERVICE TOOLS – OTHER SUPPLIER

Description	Part Number	Page
SNAP-ON FLEXIBLE PICK-UP TOOL	dptc24	33

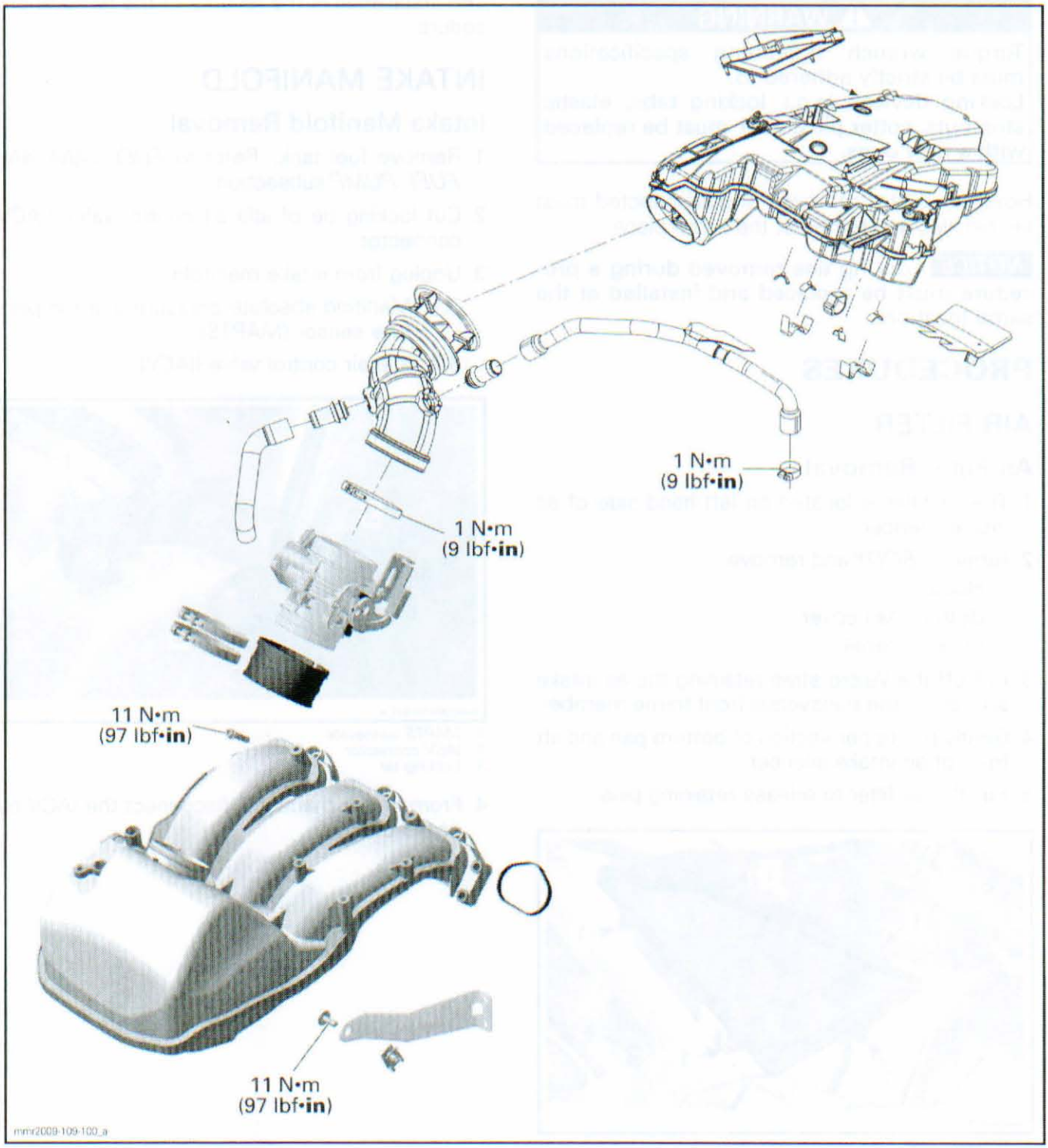

www.midwestmanuals.com

GENERAL

During assembly/installation, use the torque values and service products as in the exploded view.

Clean threads before applying a threadlocker. Refer to *SELF-LOCKING FASTENERS* and *LOCTITE APPLICATION* at the beginning of this manual for complete procedure.

⚠ WARNING

Torque wrench tightening specifications must be strictly adhered to.
Locking devices (e.g.: locking tabs, elastic stop nuts, cotter pins, etc.) must be replaced with a new ones.

Hoses or cables removed or disconnected must be installed and routed at the same place.

NOTICE Locking ties removed during a procedure must be replaced and installed at the same location.

PROCEDURES

AIR FILTER

Air Filter Removal

1. The air filter is located on left hand side of air intake silencer.
2. Refer to *BODY* and remove:
   - Hood
   - Bottom pan cover
   - LH side panel.
3. Pull off the Velcro strap retaining the air intake silencer to the transversal front frame member.
4. Gently pull upper section of bottom pan and lift front of air intake silencer.
5. Pull the air filter to release retaining pins.

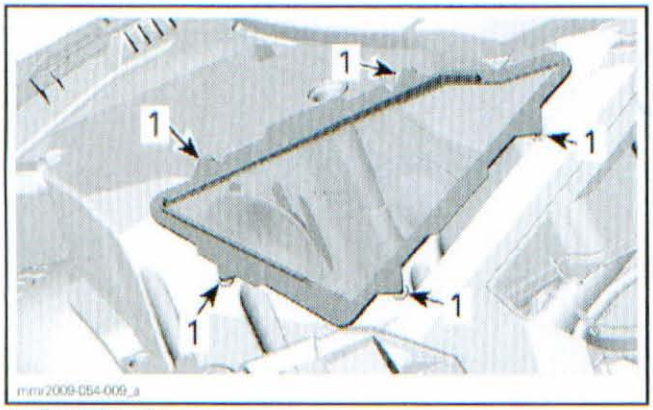

mmr2009-054-009_a

1. Retaining pins

Air Filter Cleaning

Clean with fresh water and mild soap.

Replace air filter as required.

NOTE: If the filter is very dirty, clean the interior of air intake silencer at the same time.

Air Filter Installation

The installation is the reverse of the removal procedure.

INTAKE MANIFOLD

Intake Manifold Removal

1. Remove fuel tank. Refer to *FUEL TANK AND FUEL PUMP* subsection.
2. Cut locking tie of idle air control valve (IACV) connector.
3. Unplug from intake manifold:
   - 3.1 Manifold absolute pressure and temperature sensor (MAPTS)
   - 3.2 Idle air control valve (IACV).

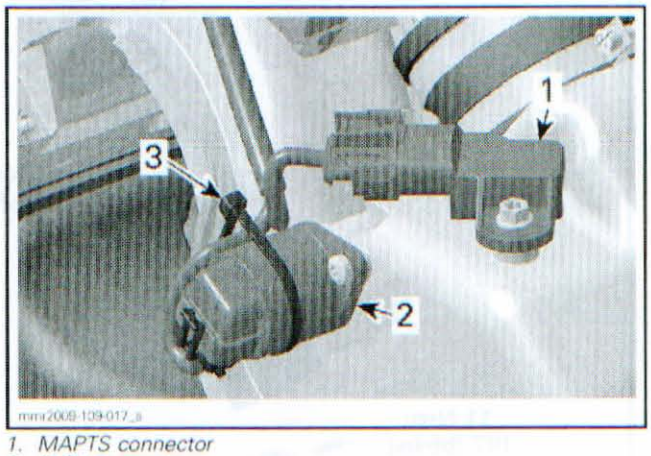

mmr2009-109-017_a

1. MAPTS connector
2. IACV connector
3. Locking tie

4. From intake manifold, disconnect the IACV bypass hose.

www.midwestmanuals.com

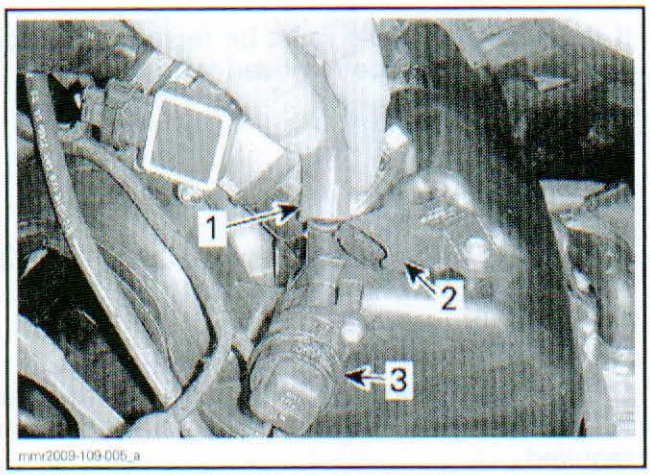

1. *IACV bypass hose*
2. *MAPTS*
3. *IACV*

5. Loosen clamp securing the throttle body to intake adapter.

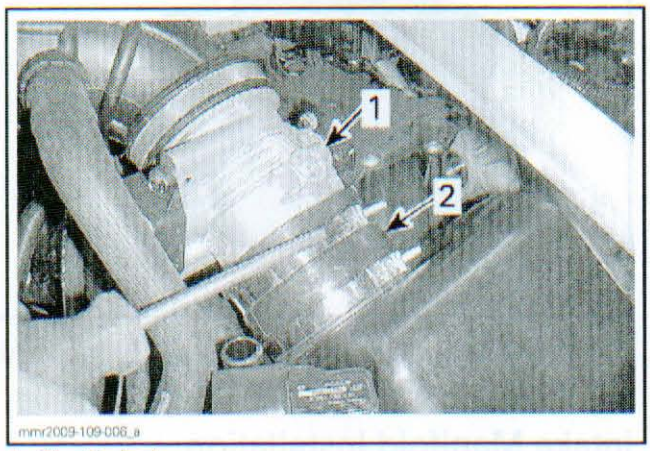

1. *Throttle body*
2. *Intake adapter*

6. Remove the throttle body from intake adapter and move throttle body aside.
7. Remove bolt securing the top of the LH side frame member.

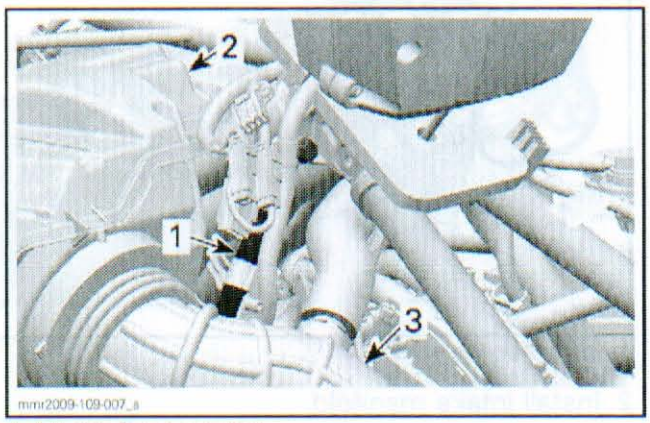

1. *LH side frame member*
2. *Air intake silencer*
3. *Intake hose*

8. Cut the locking tie securing the TPS harness to the fuel rail.

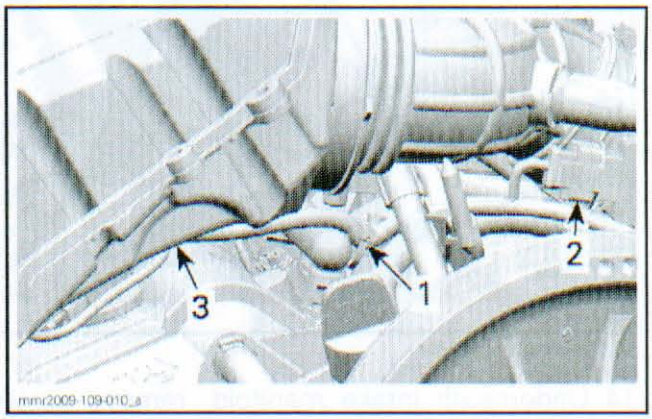

1. *Cut this locking tie*
2. *TPS connector*
3. *Air intake silencer*

9. From ECM support, cut locking ties securing:
   - Throttle body heater hose
   - Wiring harnesses.
10. Remove the ECM from its support without disconnecting connectors.
    10.1 Remove ECM retaining screws.
    10.2 Move ECM aside.
11. Unplug the engine connector.

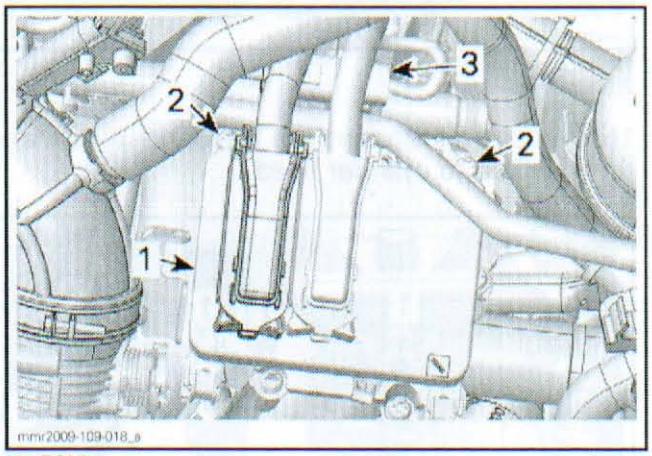

1. *ECM*
2. *ECM retaining screws*
3. *Engine connector*

12. Remove the engine connector housing from the ECM support.
13. Unplug the three injectors.

www.midwestmanuals.com

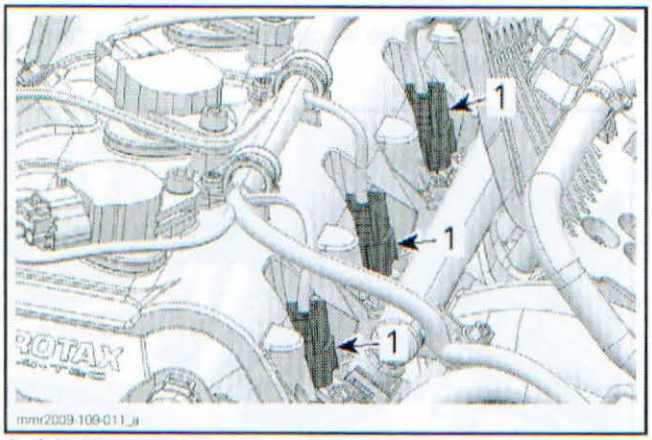

1. Injector connectors

14. Underneath intake manifold, remove screw retaining it to its bracket.

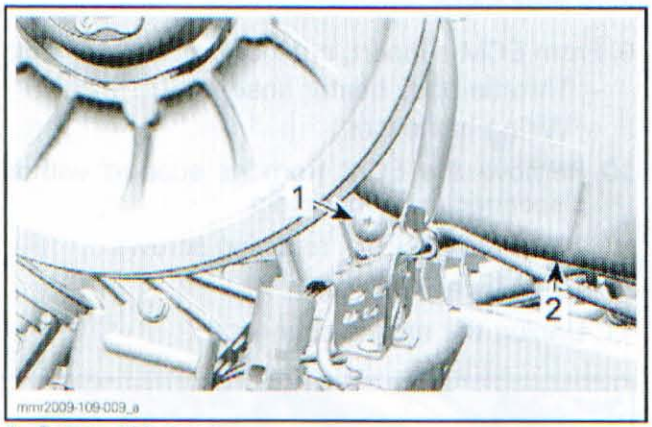

1. Remove this screw
2. Intake manifold

15. Remove all screws (6) securing the intake manifold to cylinder head.

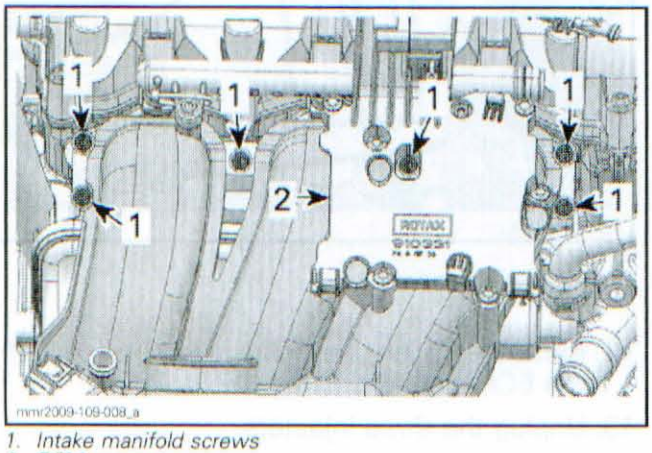

1. Intake manifold screws
2. ECM support

16. Move the intake manifold upward and rearward to pass over the transversal bar.
17. Remove the intake manifold from the vehicle.

If the intake manifold must be replaced, the following parts must be removed from it:
- Intake adapter
- MAPTS
- IACV
- ECM support
- Fuel rail with injectors (refer to *ELECTRONIC FUEL INJECTION* subsection).

Intake Manifold Inspection

Check intake manifold for cracks, warping at flanges or any other visible damages. Replace as required.

Check if intake adapter is cracked, brittle or otherwise damaged.



Check if intake manifold gaskets are brittle, hard or damages. Replace as required.

Intake Manifold Installation

The installation is the reverse of the removal procedure. However, pay attention to the following.

1. Ensure that all gaskets are properly installed.

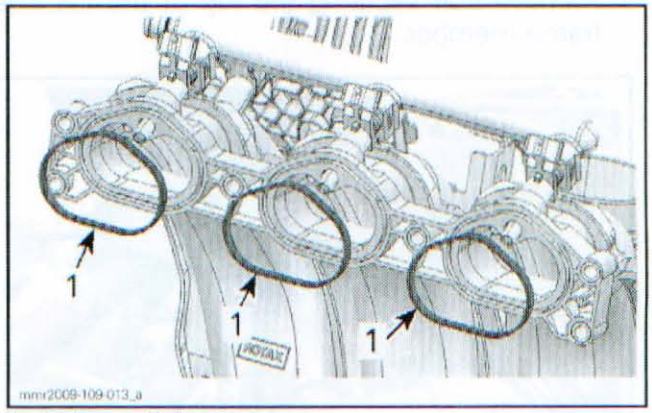

1. Intake manifold gaskets

2. Install intake manifold.

www.midwestmanuals.com

3. Using a pick-up tool such as the SNAP-ON FLEXIBLE PICK-UP TOOL (P/N DPTC24), position intake manifold screws in their holes. Turn all screws 3-4 turns.
4. Install and tighten the retaining screw under intake manifold.
5. Tighten intake manifold screws using the following sequence.

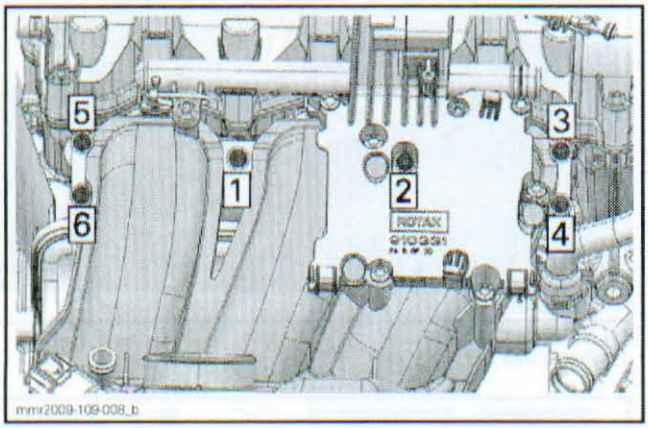

mmr2009-109-008_b

6. When installing intake adapter onto intake manifold, make sure to index intake manifold tab with intake adapter notch.

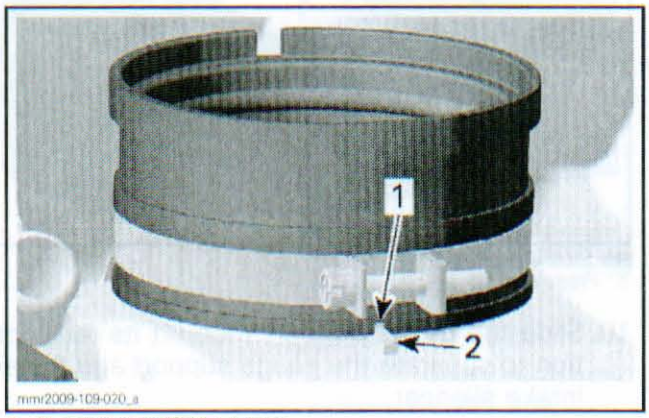

mmr2009-109-020_a

1. Notch in manifold adapter
2. Intake manifold tab

7. Install all other removed parts.

AIR INTAKE SILENCER

Air Intake Silencer Removal

1. Refer to *BODY* subsection and remove the following parts:
   - Both side panels
   - Hood
   - Bottom pan cover
   - Windshield
   - Console.
2. Remove the multifunction gauge. Refer to *LIGHTS, GAUGE AND ACCESSORIES* subsection.
3. Unplug headlight connectors.

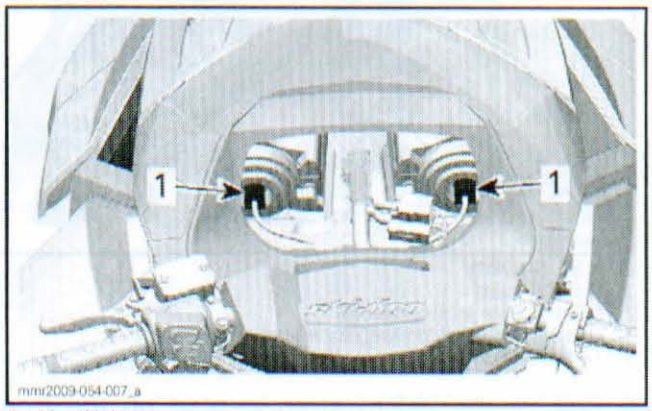

mmr2009-054-007_a

1. Headlight connectors

4. Remove screws securing the gauge support.

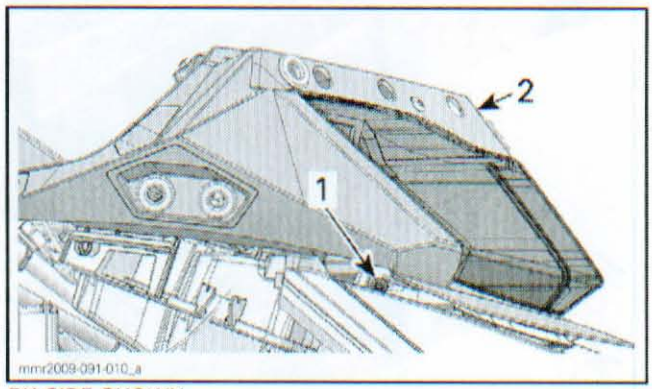

mmr2009-091-010_a

RH SIDE SHOWN
1. Retaining screw (one each side)
2. Gauge support

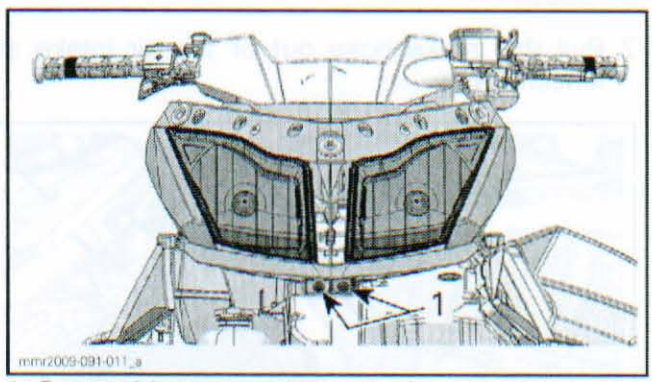

mmr2009-091-011_a

1. Front retaining screws

5. Unplug all switches, connectors or accessories from gauge support.

www.midwestmanuals.com

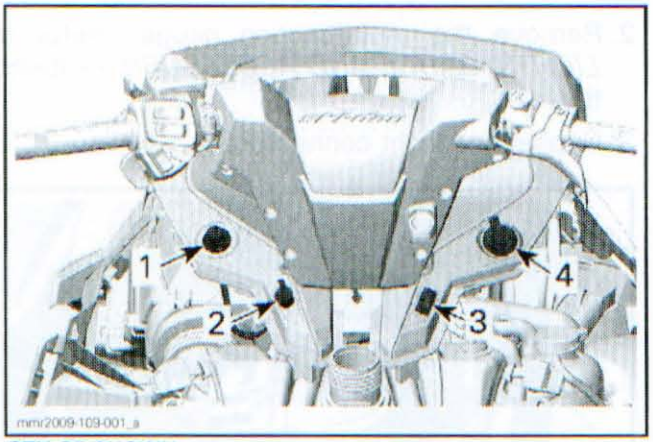

GTX SE SHOWN
1. *D.E.S.S. post*
2. *Electric visor jack connector*
3. *Heated seat switch (operator's seat)*
4. *12-volt power outlet*

6. Pull off the Velcro strap located on the front lower portion of the air intake silencer.

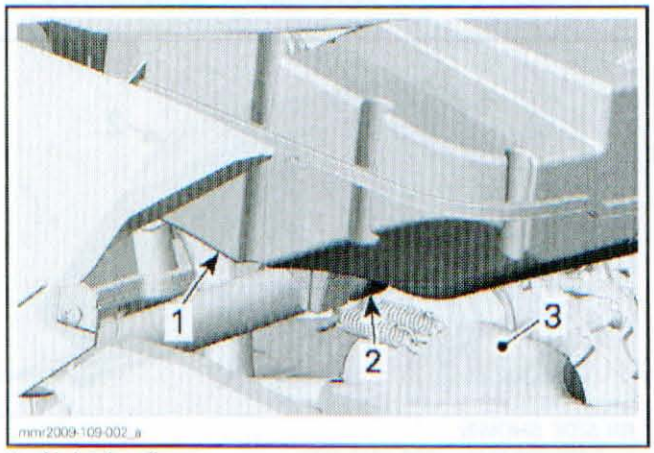

1. *Air intake silencer*
2. *Velcro Strap*
3. *Tuned pipe*

7. Pull the intake hose out of the air intake silencer.

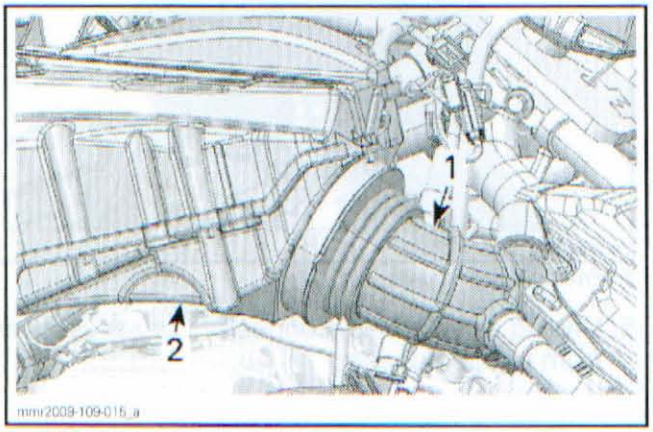

1. *Intake hose*
2. *Air intake silencer*

8. Remove the air intake silencer and the gauge support from the vehicle.
9. On LH and RH sides of gauge support, press and hold the tabs securing gauge support to air intake silencer.

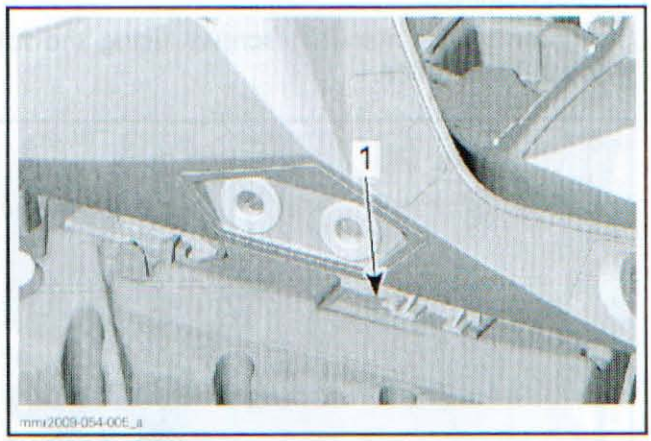

LH SIDE SHOWN
1. *Press this tab*

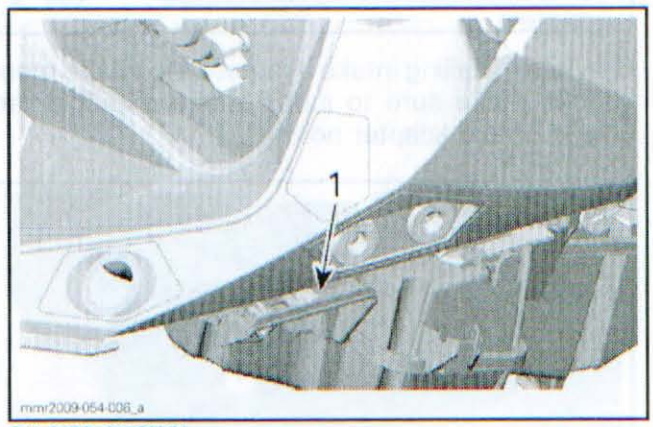

RH SIDE SHOWN
1. *Press this tab*

10. Slide the gauge support then lift its rear portion to separate the gauge support and the air intake silencer.

Air Intake Silencer Installation

The installation is the reverse of the removal procedure. However, pay attention to the following.

Insert intake hose into air intake silencer. Align the intake hose tip and air intake silencer arrow.

www.midwestmanuals.com

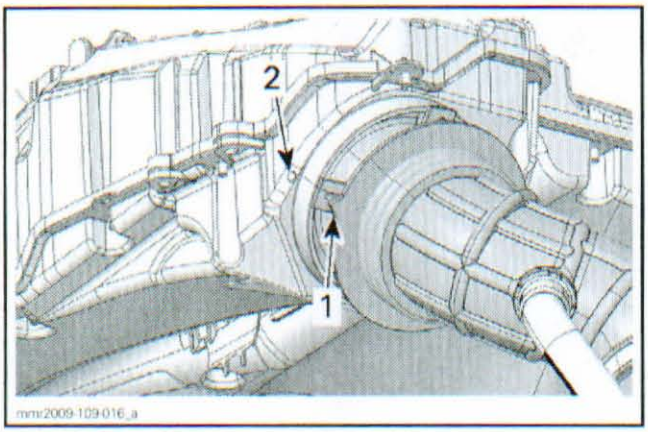

1. *Intake hose tip*
2. *Air intake silencer arrow*

NOTE: The intake hose is fully inserted when the last rib has a good 360° contact with the air intake silencer flange.

Make sure to route Velcro strap correctly.

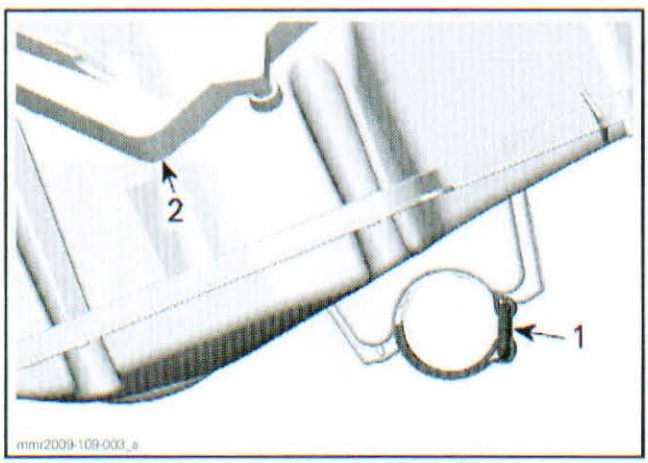

1. *Ring of Velcro strap toward the rear of vehicle*
2. *Air filter*

www.midwestmanuals.com

www.midwestmanuals.com

EXHAUST SYSTEM

SERVICE TOOLS

Description	Part Number	Page
SPRING INSTALLER/REMOVER	529 035 983	39–41

SERVICE TOOLS – OTHER SUPPLIER

Description	Part Number	Page
SNAP-ON 10 MM SOCKET	tmm10	40
SNAP-ON WOBBLE 8" EXTENSION	tmxwp8	40

www.midwestmanuals.com

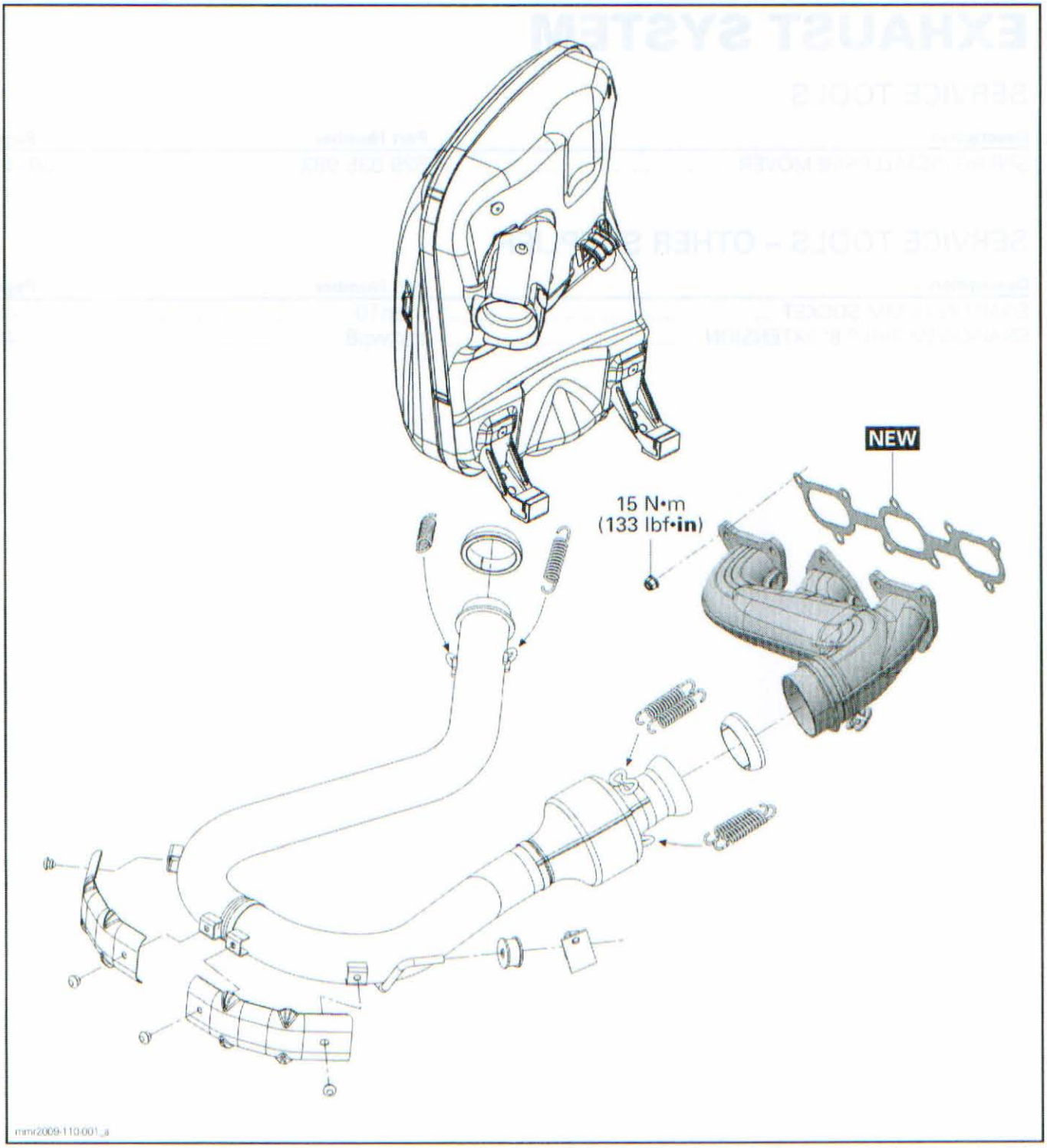

www.midwestmanuals.com

GENERAL

⚠ WARNING

To avoid potential burns, never touch exhaust system components immediately after the engine has been running because these components are very hot. Let engine and exhaust system cool down before performing any servicing.

During assembly/installation, use the torque value and service products as in the exploded view.

⚠ WARNING

Torque wrench tightening specifications must be strictly adhered to.
Locking devices (e.g.: locking tabs, elastic stop nuts, self-locking fasteners, cotter pins, etc.) must be replaced with new ones.

PROCEDURES

EXHAUST PIPE

Exhaust Pipe Removal

1. Refer to *BODY* subsection and remove:
   - Both side panels
   - Hood
   - Bottom pan cover.
2. Remove the belt guard. Refer to *DRIVE BELT* subsection.
3. Using the SPRING INSTALLER/REMOVER (P/N 529 035 983), remove exhaust springs securing exhaust pipe to muffler and exhaust manifold.

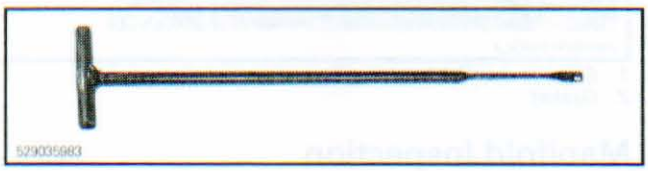

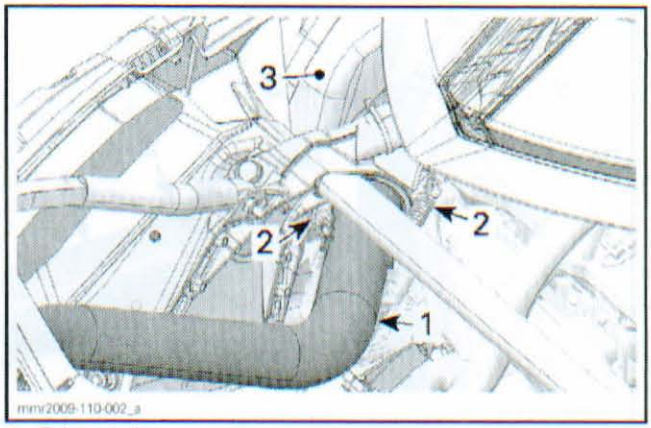

1. *Exhaust pipe*
2. *Exhaust springs*
3. *Muffler*

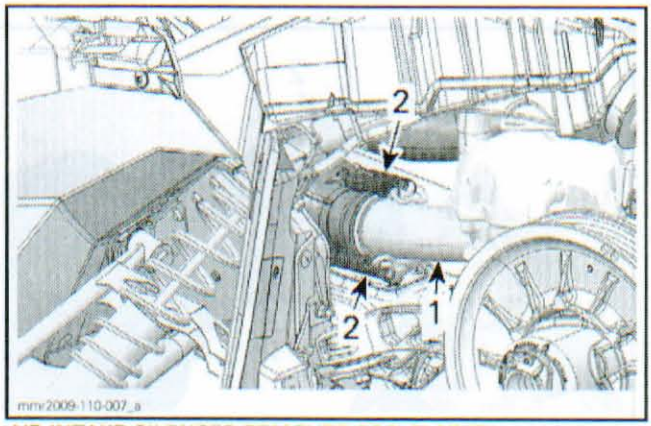

AIR INTAKE SILENCER REMOVED FOR CLARITY
1. *Exhaust manifold*
2. *Exhaust springs (4)*

4. Move the exhaust pipe forward to free its retaining rod from the rubber damper.

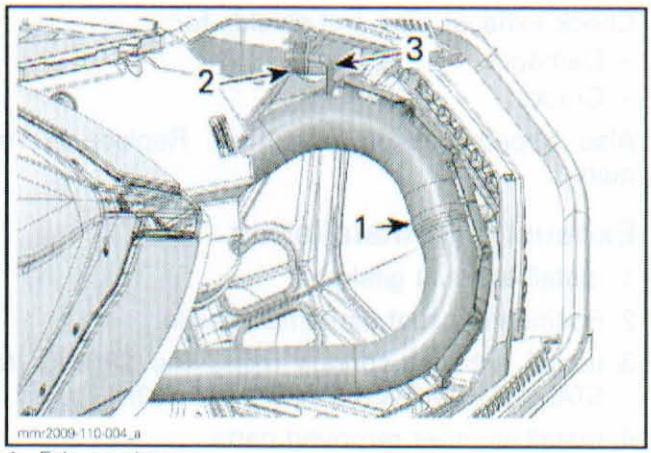

1. *Exhaust pipe*
2. *Rubber damper*
3. *Retaining rod*

5. Remove exhaust pipe from the vehicle.
6. Remove both exhaust gaskets.

www.midwestmanuals.com

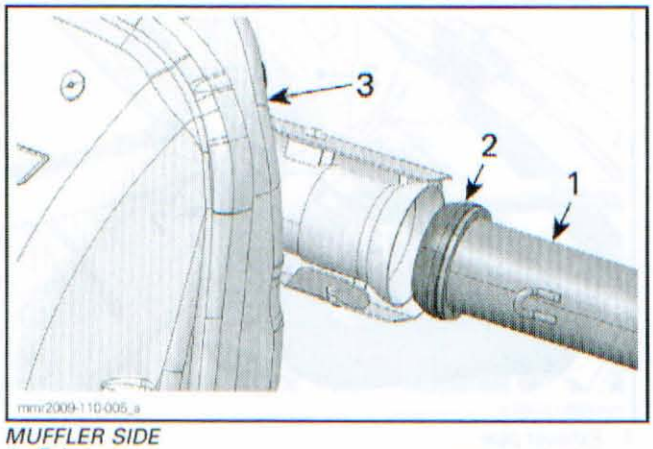

MUFFLER SIDE
1. *Exhaust pipe*
2. *Exhaust gasket*
3. *Muffler*

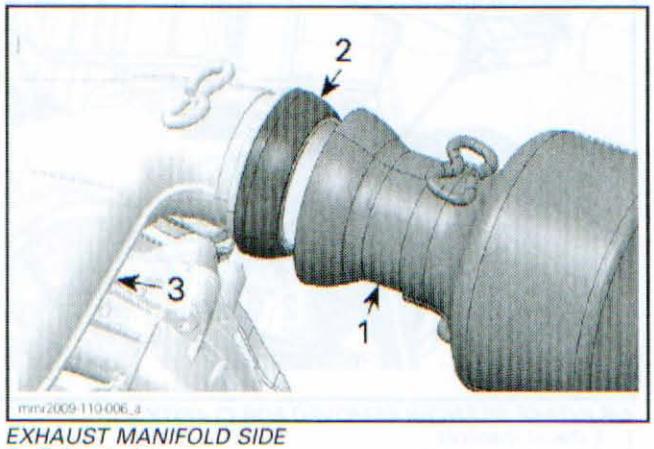

EXHAUST MANIFOLD SIDE
1. *Exhaust pipe*
2. *Exhaust gasket*
3. *Exhaust manifold*

Exhaust Pipe Inspection

Check exhaust pipe and shields for:
- Damages
- Cracks.

Also inspect gaskets condition. Replace as required.

Exhaust Pipe Installation

1. Install exhaust gaskets.
2. Position exhaust pipe into vehicle.
3. Install exhaust springs using the SPRING INSTALLER/REMOVER (P/N 529 035 983).
4. Install all other removed parts.

EXHAUST MANIFOLD

Exhaust Manifold Removal

1. Remove *EXHAUST PIPE*, see procedure in this subsection.
2. Remove manifold nuts using a 10 mm thin wall socket (1/4 drive) such as the SNAP-ON 10 MM SOCKET (P/N TMM10) with a wobble extension such as the SNAP-ON WOBBLE 8" EXTENSION (P/N TMXWP8).
   2.1 First, loosen both lower central nuts.

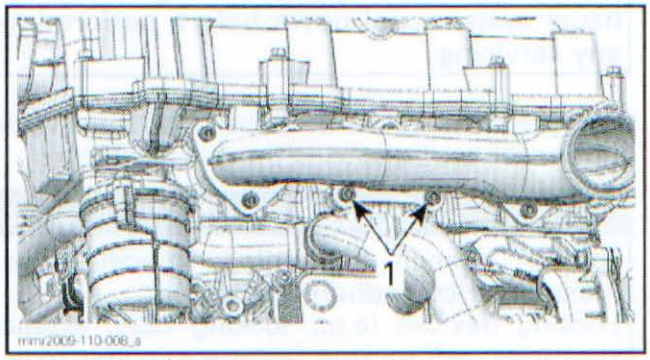

1. *Lower central nuts*

   2.2 Loosen the 7 other nuts.
   2.3 Lift up the front portion of the exhaust manifold and remove lower nuts.
   2.4 Remove the remaining nuts.
3. Remove the exhaust manifold.
4. Remove and discard the exhaust manifold gasket.

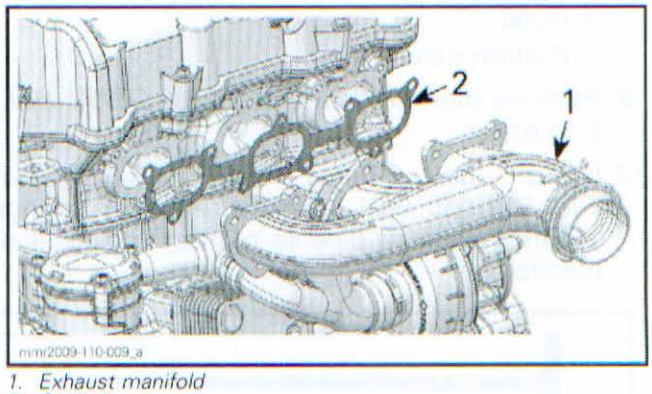

1. *Exhaust manifold*
2. *Gasket*

Manifold Inspection

Check if the manifold is cracked or damaged. Replace if necessary.

Manifold Installation

1. Install the exhaust manifold with a **NEW** gasket.
2. Position exhaust manifold on cylinder head.
3. Lift up the front portion of the exhaust manifold and install both lower central nuts.
4. Install all other nuts.

www.midwestmanuals.com

5. Tighten nuts to 15 N•m (133 lbf•**in**) using this pattern.

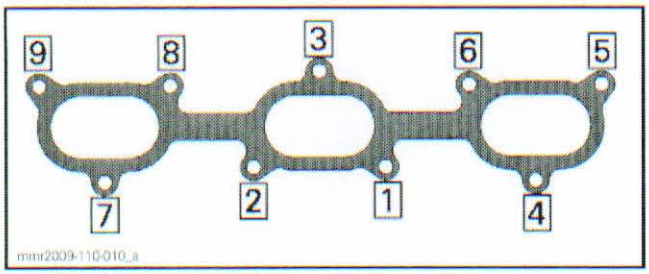

TIGHTENING SEQUENCE

6. Install exhaust pipe.

MUFFLER

Muffler Removal

1. Remove the RH side panel.
2. Remove *EXHAUST PIPE*, see procedure in this subsection.
3. Using the SPRING INSTALLER/REMOVER (P/N 529 035 983), remove exhaust springs securing the muffler.

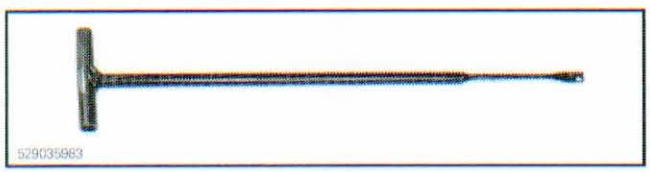

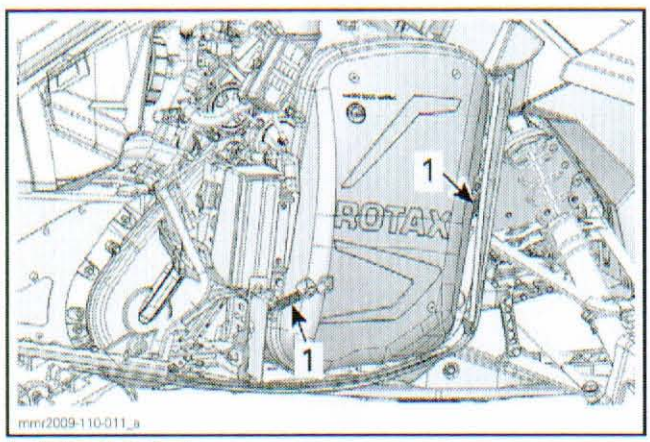

1. Exhaust springs

4. Lift up muffler to free the retaining hook.

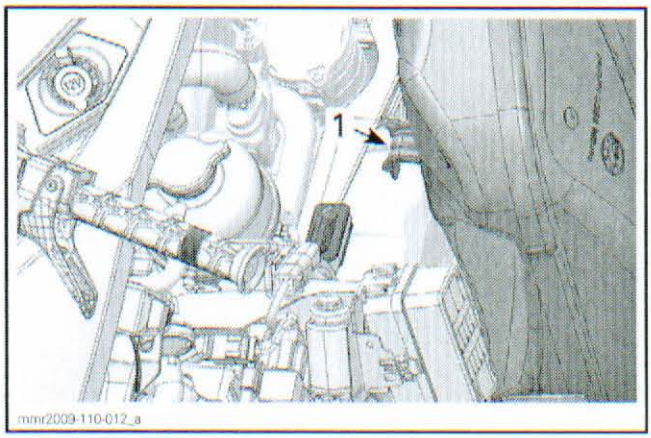

1. Retaining hook

5. Remove the muffler.

Muffler Inspection

Check the muffler for cracks or other damages.

Muffler Installation

For installation, reverse the removal procedure.

NOTE: Make sure retaining hook is inserted into the grommet.

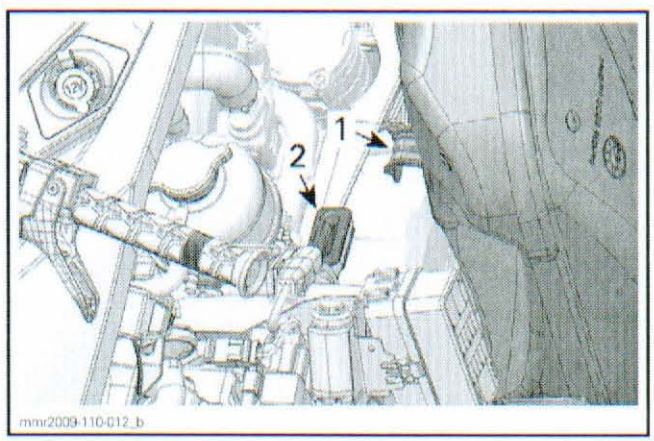

1. Retaining hook
2. Grommet

www.midwestmanuals.com

www.midwestmanuals.com

LUBRICATION SYSTEM

SERVICE TOOLS

Description	Part Number	Page
ADAPTER HOSE	529 035 652	49
ECM ADAPTER TOOL (2 CONNECTORS)	420 277 010	52
FLUKE 115 DIGITAL MULTIMETER	529 035 868	52
OIL PRESSURE TEST CAP	529 036 158	49
PRESSURE GAUGE	529 035 709	50

SERVICE PRODUCTS

Description	Part Number	Page
LOCTITE 243 (BLUE)	293 800 060	53
XP-S WINTER GRADE OIL	293 600 112	47

www.midwestmanuals.com

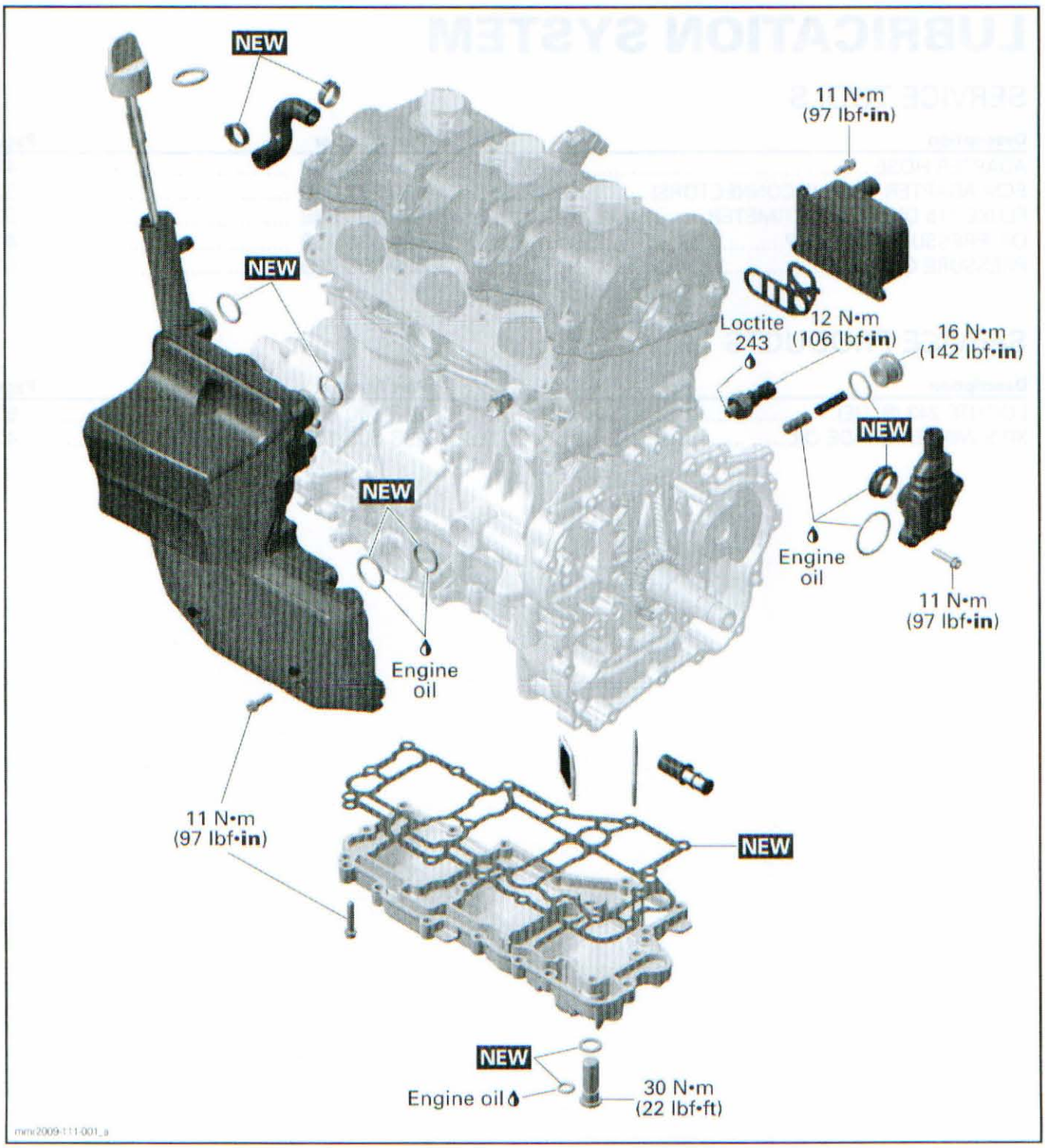

www.midwestmanuals.com

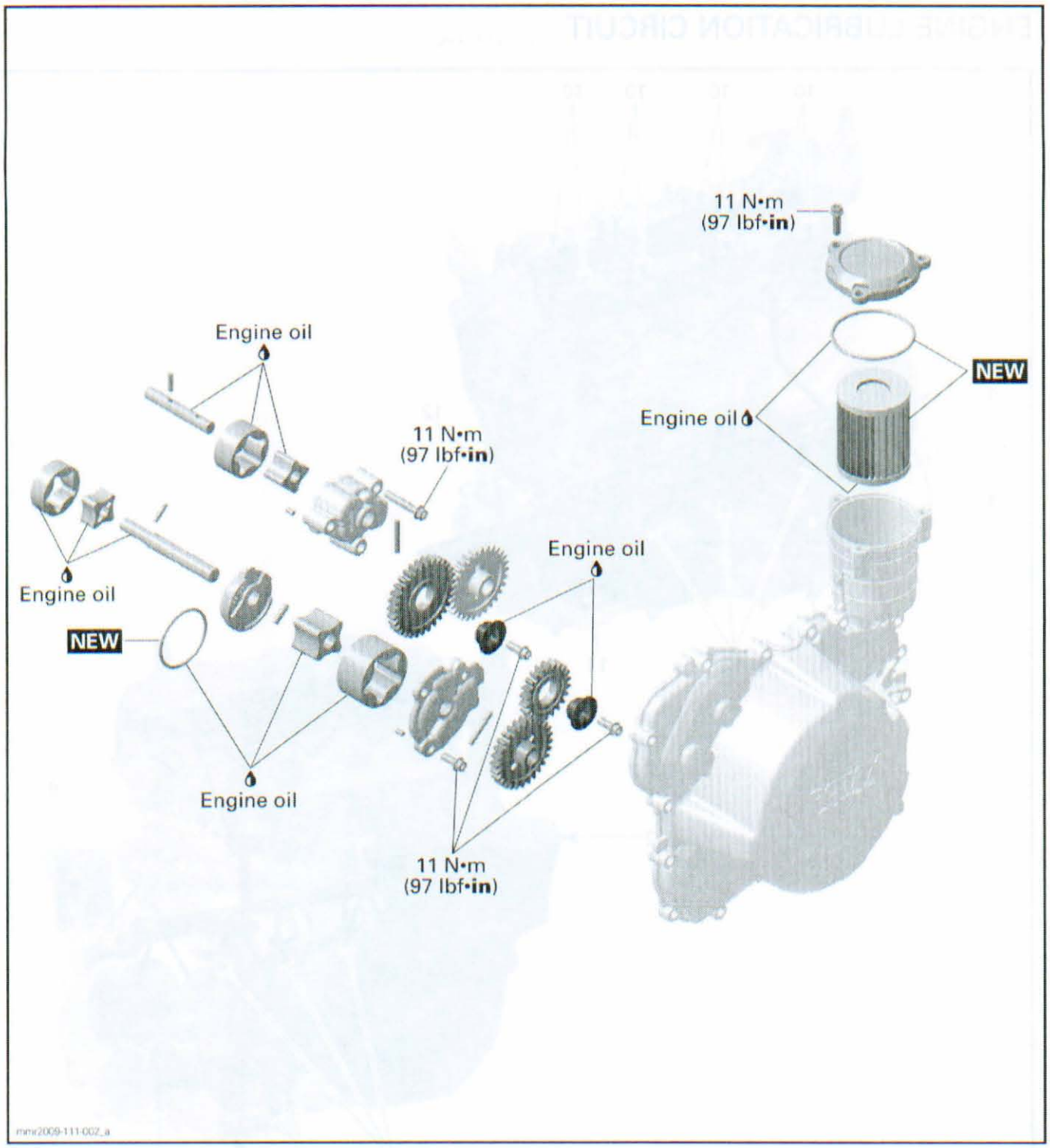

www.midwestmanuals.com

ENGINE LUBRICATION CIRCUIT

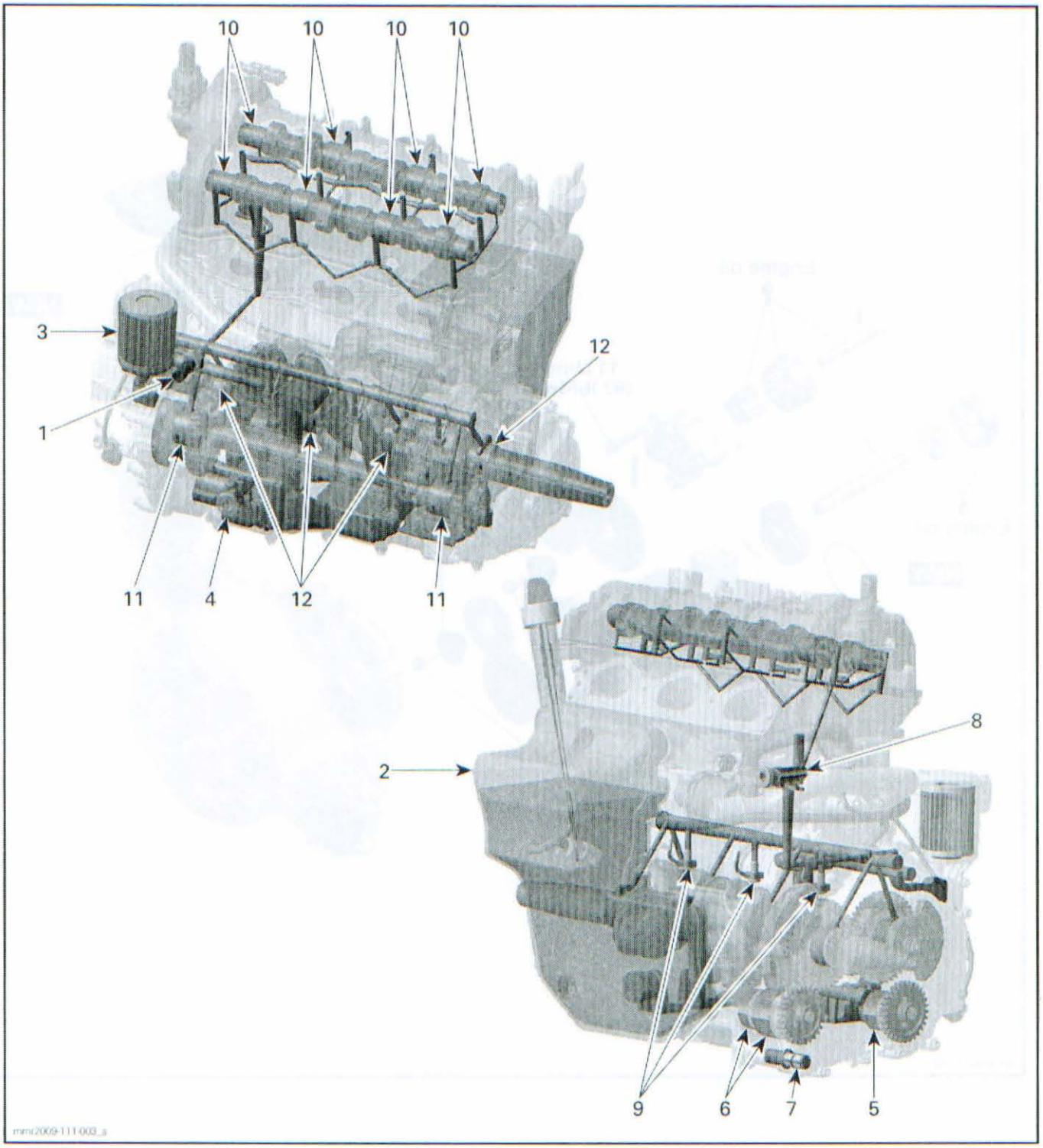

1. *Oil pressure switch*
2. *Oil tank*
3. *Oil filter*
4. *Oil pressure regulator*
5. *Oil pressure pump*
6. *Oil suction pumps*
7. *Oil strainer*
8. *Hydraulic chain tensioner*
9. *Oil spray nozzles*
10. *Camshaft plain bearings*
11. *Balancer shaft plain bearings*
12. *Crankshaft plain bearings*

www.midwestmanuals.com

GENERAL

During assembly/installation, use the torque values and service products as in the exploded views.

Clean threads before applying a threadlocker. Refer to *SELF-LOCKING FASTENERS* and *LOCTITE APPLICATION* at the beginning of this manual for complete procedure.

⚠ WARNING

Torque wrench tightening specifications must be strictly adhered to. Locking devices (e.g.: locking tabs, elastic stop nuts, cotter pins, etc.) must be replaced with new ones.

Hoses, cables or locking ties removed during a procedure must be reinstalled as per factory standards.

SYSTEM DESCRIPTION

The primary purpose of the lubrication system is to provide lubrication between moving metal parts in the engine. The friction caused by these parts when they move together creates high levels of heat that cause damage unless a lubricant is introduced to the mechanism. The oil is pressurized and distributed throughout the engine starting at the pump sent through galleries to the plain bearings (crankshaft, balancer shaft and camshafts) and other internal components. All components move on a thin film of oil.

This engine uses dry sump lubrication. The oil from the cylinder block, PTO cover and magneto cover is pumped by two scavenge pumps into an oil tank, located on the back side of the engine.

An oil filter and 3 oil strainers are used to filter dirt and debris from the oil circuit.

Two oil strainers are located between oil sump cover and cylinder block. The other oil strainer is located inside the cylinder block, on the engine magneto side.

Oil Pressure

Oil pressure allows to deliver engine oil to all internal moving parts of engine. Oil pressure is essential so that oil can reach remote components to allow at the engine a long life. A pressure pump is used to perform this.

The oil pressure is monitored by the ECM when engine reaches 2500 RPM. If a low oil pressure is detected, a fault code is registered in the ECM and the limp home mode is activated to avoid damaging the engine. The engine speed is limited to 4500 RPM.

MAINTENANCE

ENGINE OIL

Recommended Oil

Use the XP-S WINTER GRADE OIL (P/N 293 600 112).

If this oil is not available, use a SAE 0W40 oil that meets or exceeds the requirement for API service classification SM, SL or SJ. Always check API service label certification on the oil container, it must contain at least one of the above standards.

NOTICE This is the only recommended viscosity to ensure proper cold start and optimum engine protection at high RPM and high temperature.

Engine Oil Level Verification

NOTICE Operating the engine with an improper level may severely damage engine. Follow this procedure to obtain a precise reading of the engine oil level.

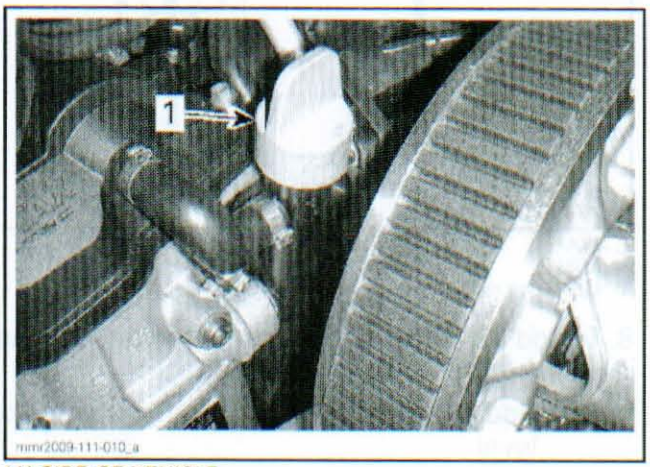

LH SIDE OF VEHICLE
1. Oil tank dipstick

With the engine at **normal operating temperature**, place vehicle on a level surface and proceed as follows to check oil level:

1. Start engine and let it idle for at least 30 seconds.
2. Stop engine.
3. Open the LH side panel.
4. Remove the drive belt guard. refer to *DRIVE BELT* subsection.
5. Unscrew and remove dipstick and wipe clean.

www.midwestmanuals.com

6. Completely insert dipstick in the filler tube and tighten it by a 1/4 turn.

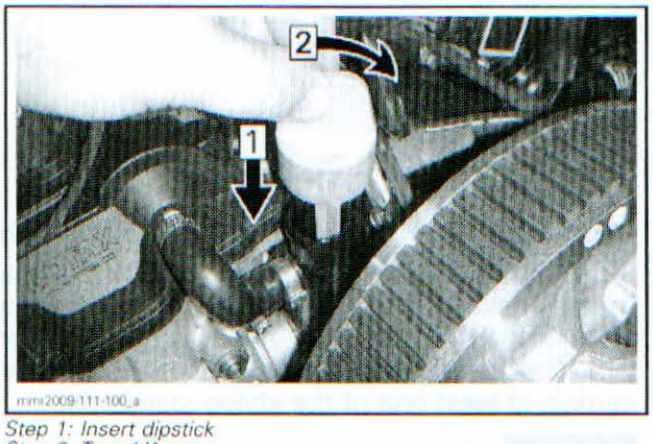

Step 1: Insert dipstick
Step 2: Turn 1/4 turn

7. Remove dipstick again and check oil level. It should be near or equal to the upper mark.

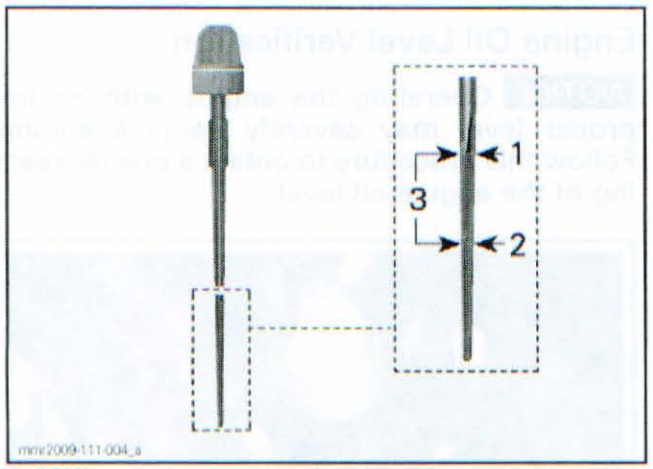

1. *MAX.*
2. *MIN.*
3. *Operating range*

8. To add oil, remove the dipstick. Place a funnel into the filler tube to avoid spillage.
   - 8.1 Add a small amount of oil and recheck oil level.
   - 8.2 Repeat the operation until oil level reaches the dipstick's upper mark. Do not overfill.

NOTE: The oil quantity between MIN. and MAX. mark is approximately 500 ml (17 U.S. oz).

9. Reinstall dipstick and properly tighten it by a 1/4 turn.
10. Wipe off any oil spillage.
11. Install drive belt guard.
12. Close the LH side panel.

Engine Oil Replacement

⚠ WARNING

The engine oil can be very hot. Wait until engine oil is warm.

NOTICE **Engine oil and oil filter must be replaced at the same time.**

1. Place vehicle on a level surface.
2. Remove the LH side panel.
3. Remove the drive belt guard. Refer to *DRIVE BELT* subsection.
4. Remove dipstick.

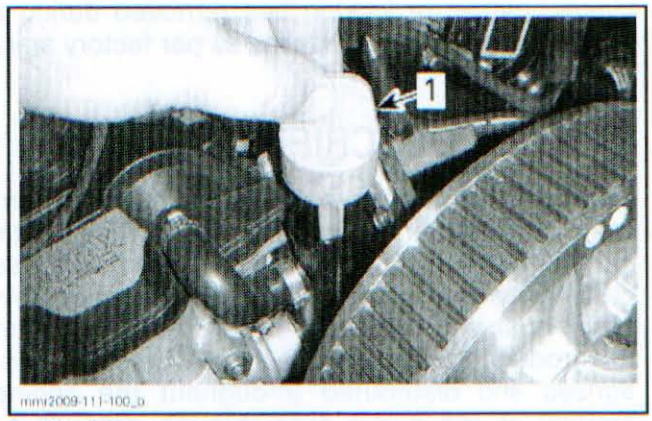

1. *Dipstick*

5. From underneath of vehicle, clean drain plug area.

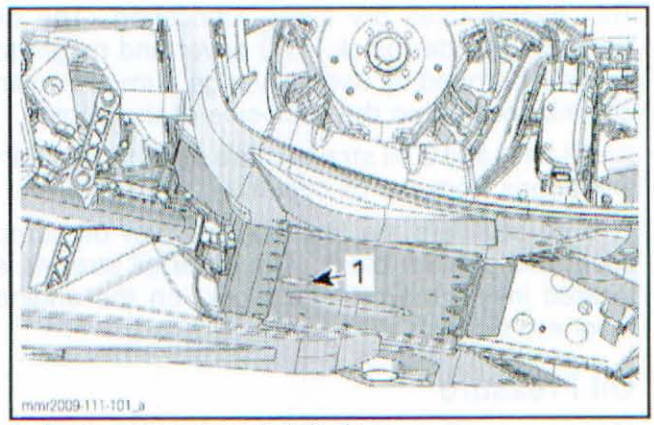

1. *Frame opening to reach drain plug*

6. Place a drain pan under frame opening.
7. Remove engine oil drain plug and discard sealing washer.
8. Allow oil to drain completely.

NOTE: Oil condition gives information about the engine condition. See *TROUBLESHOOTING* in this subsection.

www.midwestmanuals.com

9. Install **NEW** sealing washer and O-ring on oil drain plug.

NOTICE **Never use a sealing washer a second time. Always replace with a new one.**

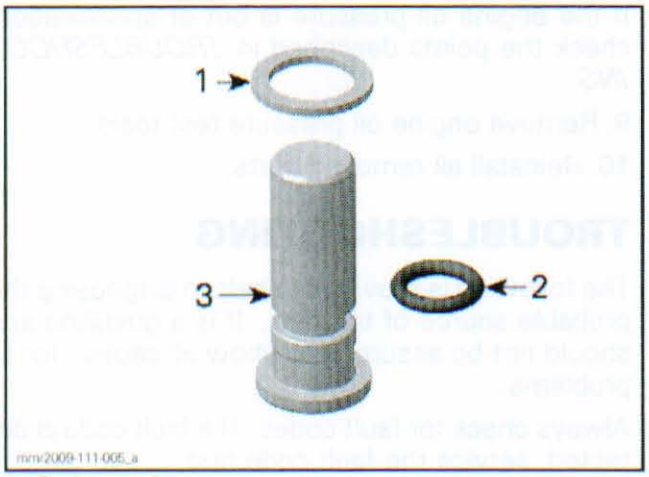

1. Sealing washer
2. O-ring
3. Oil drain plug

10. Install and tighten oil drain plug.
11. Replace *OIL FILTER*, see procedure in this subsection.
12. Refill oil tank at the proper level with the recommended oil.

NOTE: Engine oil capacity with filter at oil change is approximately 3.5 L (3.7 qt (U.S. liq.)).

13. Reinstall dipstick in oil tank.
14. Start engine and let it idle for a few minutes.
15. Ensure there are no leaks.
16. Stop engine and check oil level. Refill as necessary.
17. Dispose oil and filter as per your local environmental regulations.

INSPECTION

ENGINE OIL PRESSURE

1. Remove the RH side panel.
2. Remove muffler. Refer to *EXHAUST SYSTEM* subsection.
3. Replace *OIL FILTER*, see procedure in this subsection.

NOTICE **To avoid possible erroneous reading during the oil pressure test, it is important to replace the oil filter by a new one. The result of the oil pressure test will be false if the oil filter is clogged.**

4. Completely tighten the ADAPTER HOSE (P/N 529 035 652) on the OIL PRESSURE TEST CAP (P/N 529 036 158).

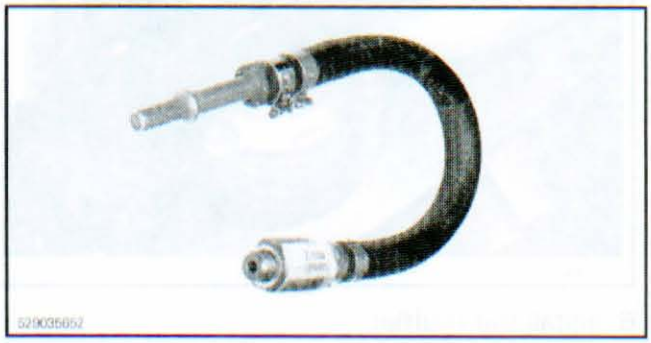

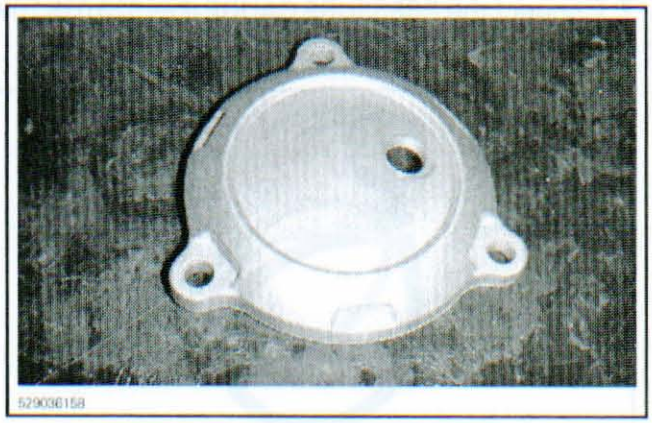

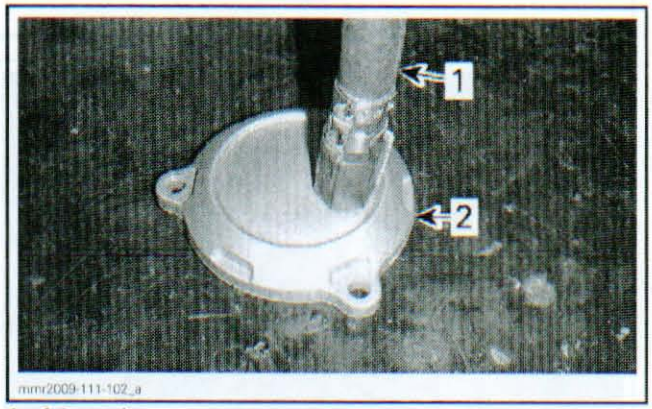

1. Adapter hose
2. Oil pressure test cap

5. Install the oil pressure test cap on the oil filter reservoir. Position adapter hose near engine.

www.midwestmanuals.com

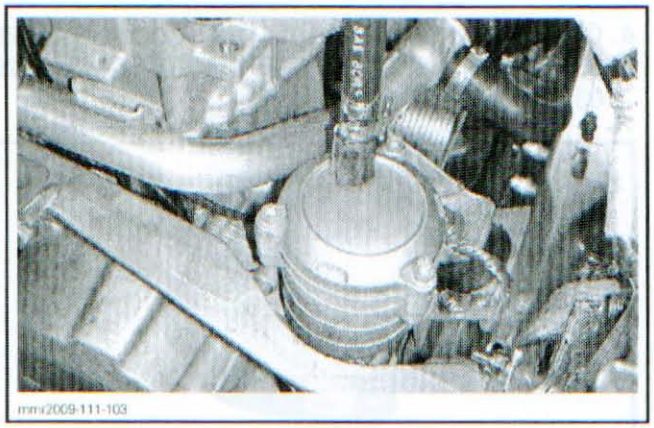

6. Install the muffler.
7. Connect the PRESSURE GAUGE (P/N 529 035 709) to adapter hose.



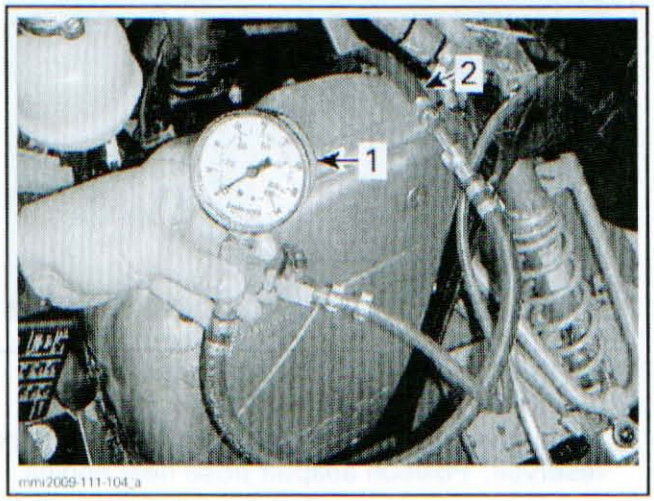

1. *Pressure gauge*
2. *Adapter hose*

8. Start engine and check the oil pressure.

The engine oil pressure should be within the following specification with the recommended oil at the proper level and with engine at normal operating temperature (minimum oil temperature of 80°C (176°F)).

OIL PRESSURE	AT IDLE	7700 RPM
Minimum	100 kPa (15 PSI)	400 kPa (58 PSI)

If the engine oil pressure is out of specification, check the points described in *TROUBLESHOOTING*.

9. Remove engine oil pressure test tools.
10. Reinstall all removed parts.

TROUBLESHOOTING

The following is provided to help in diagnosing the probable source of troubles. It is a guideline and should not be assumed to show all causes for all problems.

Always check for fault codes. If a fault code is detected, service the fault code first.

LOW OR NO ENGINE OIL PRESSURE

1. **Oil level is too low.**
   - *Refill engine oil.*
   - *Check for high oil consumption. See below.*
   - *Check for oil leaks (oil leaking out of leak indicator hole, gaskets, oil seal or O-rings). Repair or replace.*
2. **Use of a bad grade oil**
   - *Replace engine oil with BRP recommended oil.*
3. **Oil pressure switch is defective.**
   - *Check and replace if necessary.*
4. **Oil filter is clogged.**
   - *Replace engine oil and oil filter at the same time.*
5. **Oil pressure regulator valve sticks open, or spring load is too small.**
   - *Clean oil regulator piston and its bore. Replace if necessary.*
   - *Measure spring free length. Replace if out of specification.*
6. **Oil pump(s) worn or damaged.**
   - *Check if oil pump drive gears are damaged. Replace if necessary.*
   - *Check oil pump rotors and its bore for wear limits. Replace if out of specification.*
7. **Engine oil strainers are clogged.**
   - *Remove and clean engine oil strainers.*
8. **Heavy wear on plain bearings.**
   - *Check radial clearance of plain bearings. Replace if out of specification.*

www.midwestmanuals.com

HIGH OIL CONSUMPTION

1. Oil in breathing system.
   - *Check if breather V-ring is brittle, hard or damaged. Replace V-ring.*
2. Valve stem seals worn or damaged.
   - *Replace valve stem seals.*
3. Piston rings worn out (blue colored exhaust smoke).
   - *Replace piston rings.*

OIL CONTAMINATION (WHITE APPEARANCE)

1. Oil seal and rotary seal on water pump shaft leaking.
   - *Replace oil seal and water pump shaft assembly. Change engine oil.*
2. Cylinder head gasket leaking.
   - *Replace cylinder head gasket. Change engine oil.*
3. Cylinder head screws not properly tightened.
   - *Retighten screws with recommended torque. Change engine oil.*
4. Oil cooler gasket leaking.
   - *Replace gasket. Change engine oil.*

PROCEDURES

OIL FILTER

Oil Filter Removal

1. Remove the RH side panel.
2. Remove muffler, refer to *EXHAUST SYSTEM* subsection.
3. Clean oil filter area.
4. Remove:
   - Oil filter cover screws
   - Oil filter cover with O-ring
   - Oil filter.

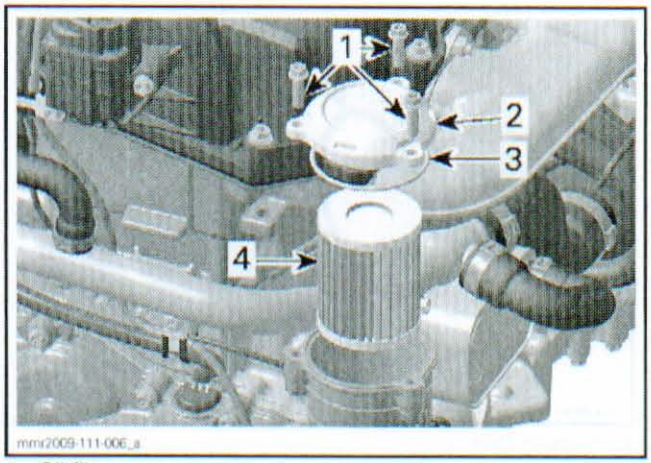

mmr2009-111-006_a

1. *Oil filter cover screws*
2. *Oil filter cover*
3. *O-ring*
4. *Oil filter*

5. Dispose filter as per your local environmental regulations.

Oil Filter Installation

The installation is the reverse of the removal procedure. Pay attention to the following details.

1. Check the oil filter inlet and outlet orifices inside oil filter receptacle (integrated part of magneto cover) for dirt and contaminations.

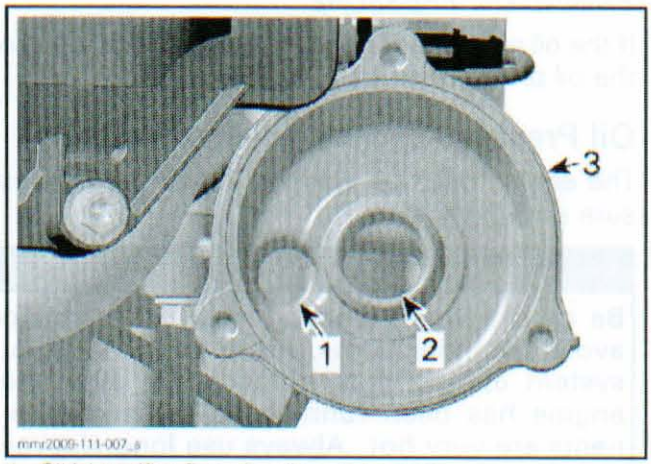

mmr2009-111-007_a

1. *Oil inlet orifice from the oil pressure pump*
2. *Oil outlet orifice to the engine lubrication system*
3. *Oil filter receptacle*

2. Install a **NEW** O-ring on oil filter cover.
3. Apply engine oil on filter and on filter cover O-ring.

www.midwestmanuals.com

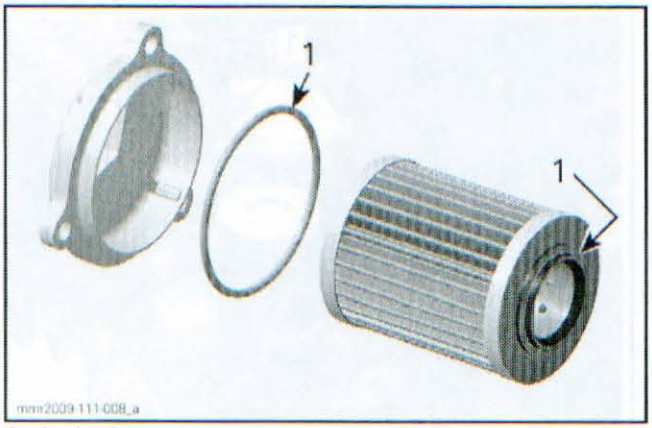

1. Apply oil here

4. Install the oil filter cover.
5. Tighten oil filter cover screws.

OIL PRESSURE SWITCH (OPS)

Oil Pressure Switch Activation

The oil pressure switch activates if engine oil pressure falls between 20 kPa and 40 kPa (2.9 PSI and 5.8 PSI).

Oil Pressure Switch Inspection

First, ensure oil pressure is adequate. Refer to *ENGINE OIL PRESSURE*.

If the oil pressure is good, check the resistance of the oil pressure switch.

Oil Pressure Switch Resistance Test

The engine must be warm to check the oil pressure switch properly.

⚠ WARNING

Be careful when working near hot part. To avoid potential burns, never touch exhaust system components immediately after the engine has been running as these components are very hot. Always use long sleeves and gloves.

1. Remove hood. Refer to *BODY* subsection.
2. Unplug the connector from the oil pressure switch.
3. Using the FLUKE 115 DIGITAL MULTIMETER (P/N 529 035 868), check the oil pressure switch resistance.



4. Read result and compare to table.

RESISTANCE (Ω)		
ENGINE NOT RUNNING		
OPS pin	Engine ground	Close to 0 Ω (normally closed switch)

If resistance is out of specification, replace the oil pressure switch.

If the resistance is correct, go to step 5.

5. Start engine.
6. Read result and compare to table.

RESISTANCE (Ω)		
ENGINE RUNNING		
OPS pin	Engine ground	Infinitely high (OL)

If resistance is out of specification, replace the oil pressure switch.

If the resistance is correct, check the oil pressure switch circuit continuity.

Oil Pressure Switch Circuit Continuity Test

1. Remove the air intake silencer. Refer to *AIR INTAKE SYSTEM* subsection.
2. Remove hose between breather and throttle body adapter.
3. Unplug the connector A from the ECM.
4. Using the ECM ADAPTER TOOL (2 CONNECTORS) (P/N 420 277 010), check continuity of circuit A6.

www.midwestmanuals.com

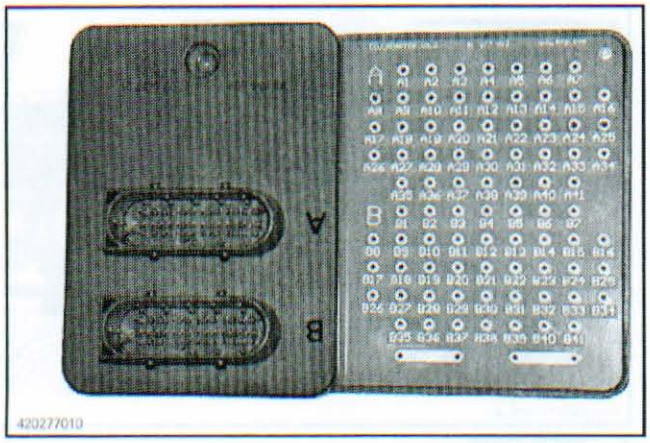

420277010

If the continuity is good and all other tests, try a new ECM.

If the continuity is bad, repair or replace defective wire or connectors.

Oil Pressure Switch Removal

1. Remove the front engine support on MAG side. Refer to *ENGINE REMOVAL AND INSTALLATION* subsection.
2. Cut locking tie and unplug the OPS switch connector.

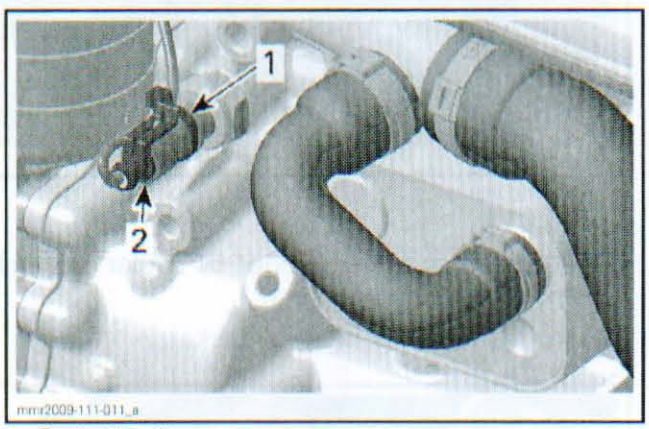

mmr2009-111-011_a

1. Cut locking tie
2. OPS switch connector

3. Unscrew and remove the OPS switch.

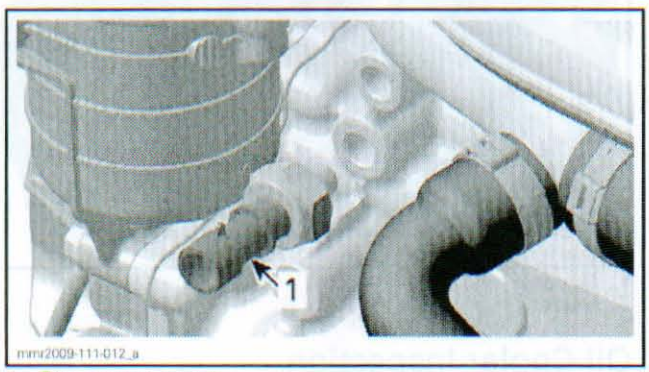

mmr2009-111-012_a

1. Oil pressure switch

Oil Pressure Switch Installation

1. Apply LOCTITE 243 (BLUE) (P/N 293 800 060) on threads of oil pressure switch.
2. Torque oil pressure switch to 12 N•m (106 lbf•**in**).
3. Install engine support and all other removed parts.

OIL TANK

Oil Tank Removal

1. Remove the engine from vehicle. Refer to *ENGINE REMOVAL AND INSTALLATION* subsection.
2. Drain engine oil. Refer to *ENGINE OIL REPLACEMENT* in this subsection.
3. Cut and discard the Oetiker clamp securing the oil tank vent hose to filler tube.
4. Remove oil tank vent hose.

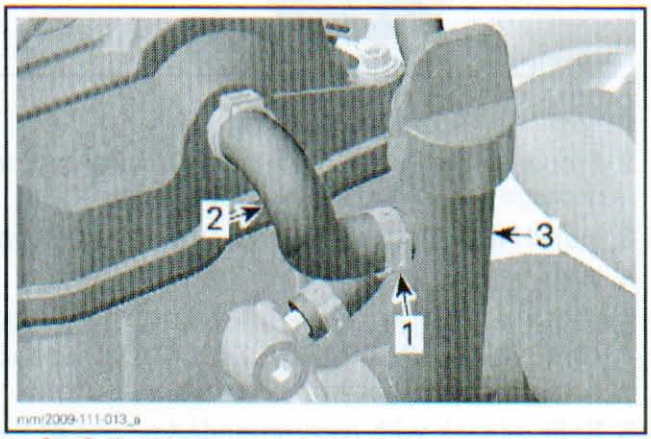

mmr2009-111-013_a

1. Cut Oetiker clamp
2. Oil tank vent hose
3. Filler tube

5. Unscrew oil tank retaining screws.

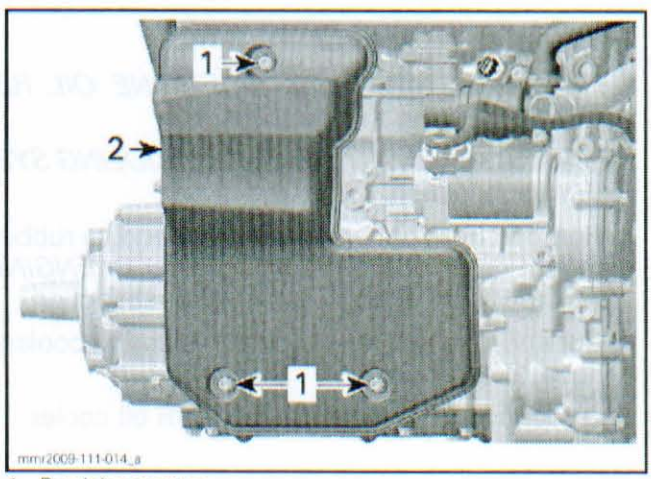

mmr2009-111-014_a

1. Retaining screws
2. Oil tank

www.midwestmanuals.com

6. Place a drain pan underneath oil tank.
7. Remove oil tank from the engine.

Oil Tank Installation

The installation is the reverse of the removal procedure. However, pay attention to the following details.

1. Install **NEW** oil tank O-rings.

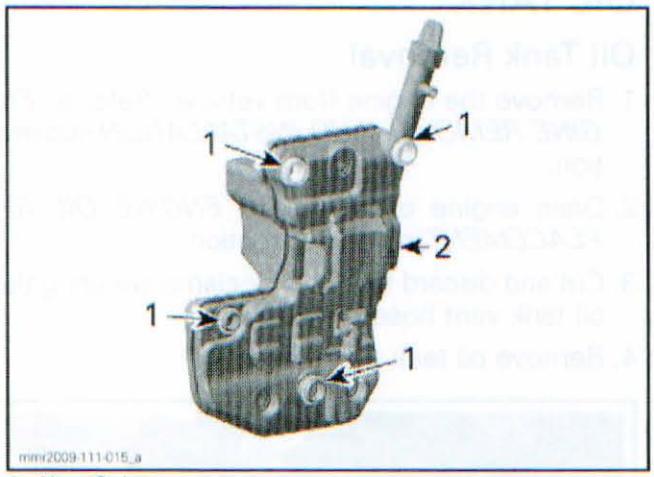

1. New O-rings
2. Oil tank

2. Properly fit oil tank to engine, ensure not to damage the O-rings during installation.
3. Install **NEW** Oetiker clamp to oil tank vent hose.
4. Wipe off any oil spillage.
5. Install the engine in the vehicle. Refer to *ENGINE REMOVAL AND INSTALLATION* subsection.
6. Refill oil tank with recommended oil and at the proper level. Refer to *ENGINE OIL REPLACEMENT* at the beginning of this subsection.

OIL COOLER

Oil Cooler Removal

1. Drain engine oil. Refer to *ENGINE OIL REPLACEMENT* in this subsection.
2. Drain cooling system. Refer to *COOLING SYSTEM* subsection.
3. Remove the front engine support and its rubber mount on engine MAG side. Refer to *ENGINE REMOVAL AND INSTALLATION* subsection.
4. Cut and discard Oetiker clamp securing coolant hose to oil cooler.
5. Disconnect the coolant hose from oil cooler.

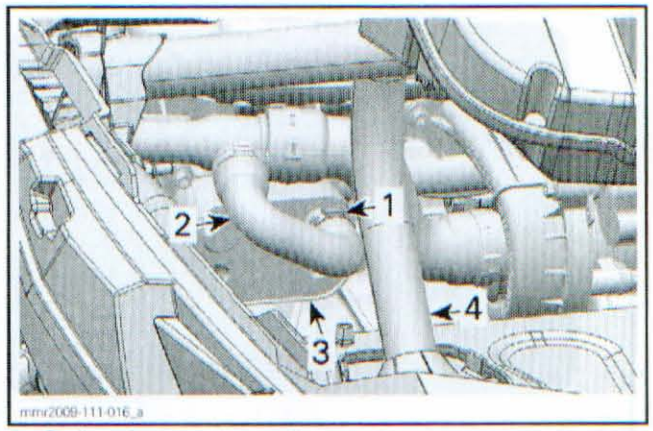

1. Oetiker clamp
2. Coolant hose
3. Oil cooler
4. Steering column

6. Remove oil cooler retaining screws.

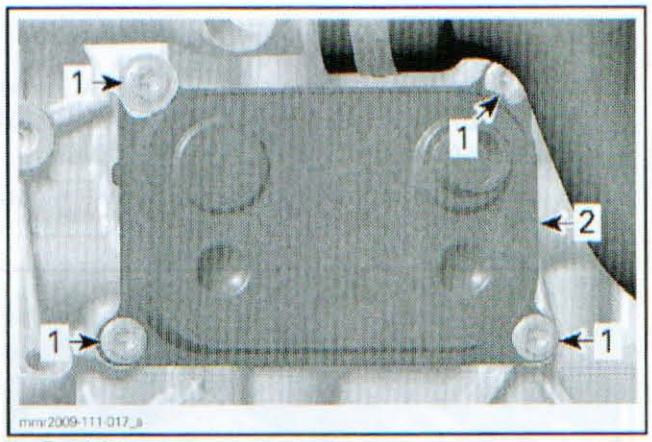

1. Retaining screws
2. Oil cooler

7. Place rags or towels under oil cooler to catch remaining oil and coolant.
8. Remove oil cooler and its gasket.

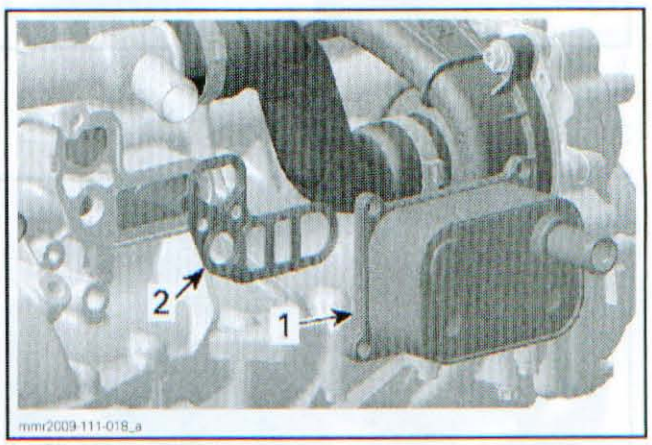

1. Oil cooler
2. Gasket

Oil Cooler Inspection

Check oil cooler for cracks and other damage.

www.midwestmanuals.com

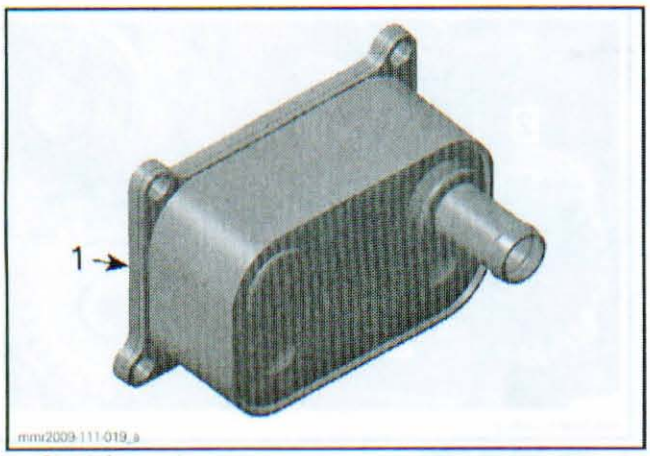

1. Check for cracks

Check if gasket is brittle, hard or otherwise damaged.

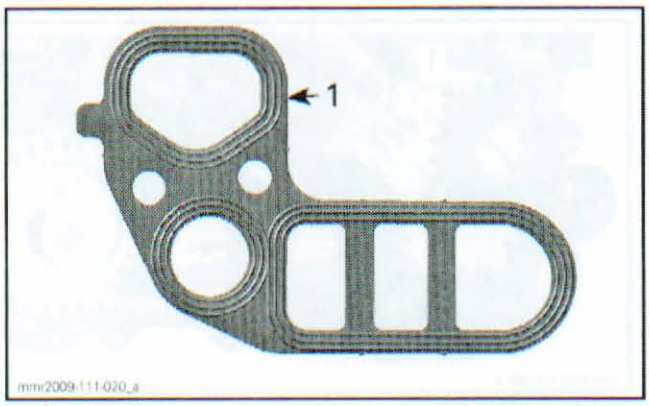

1. Check gasket

Replace parts as necessary.

Oil Cooler Installation

For installation, reverse the removal procedure. Pay attention to the following details.

Install a **NEW** Oetiker clamp on coolant hose.

Wipe off any oil and coolant spillage.

Install the engine support. Refer to *ENGINE REMOVAL AND INSTALLATION* subsection.

Refill oil tank with recommended oil and at the proper level. Refer to *ENGINE OIL REPLACEMENT* in this subsection.

Refill and bleed cooling system. Refer to *COOLING SYSTEM* subsection.

ENGINE OIL PRESSURE REGULATOR

The engine oil pressure regulator is located inside the cylinder block on the front side of the engine.

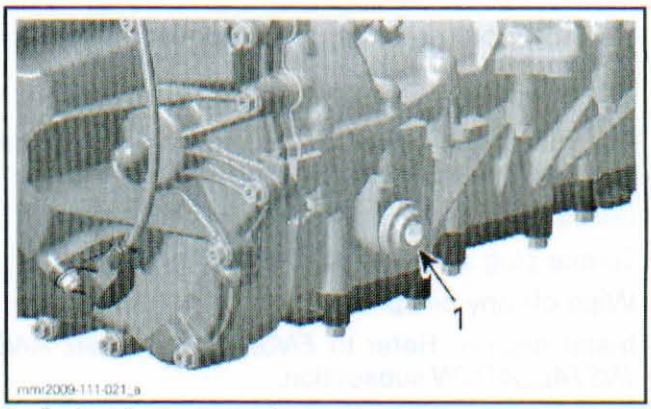

1. Engine oil pressure regulator

Oil Pressure Regulator Removal

1. Remove engine from vehicle. Refer to *ENGINE REMOVAL AND INSTALLATION* subsection.
2. Drain engine oil. Refer to *ENGINE OIL REPLACEMENT* in this subsection.
3. Remove plug screw and sealing washer. Discard sealing washer.
4. Pull out oil pressure regulator.

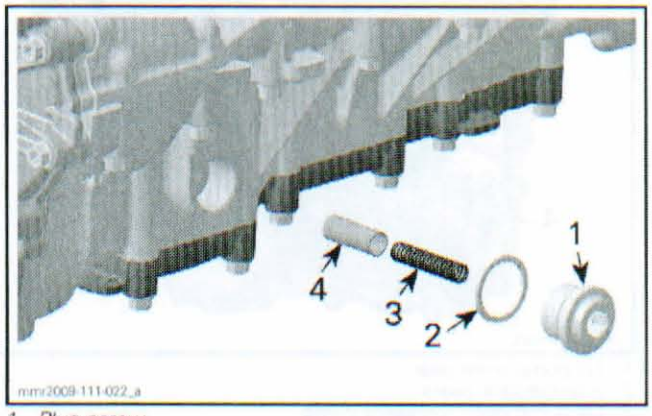

1. Plug screw
2. Sealing washer
3. Regulator spring
4. Regulator piston

Oil Pressure Regulator Inspection

Clean bore and thread in the cylinder block from metal shavings and other contaminations.

Inspect oil pressure regulator piston and its bore in cylinder block for scoring or other damages.

Check if piston moves easily in its bore.

Check compression spring for free length.

SPRING FREE LENGTH	
New nominal	46 mm (1.811 in)
Service limit	45 mm (1.772 in)

Visually check compression spring for squareness.

www.midwestmanuals.com

Replace worn or damaged components.

Oil Pressure Regulator Installation

For installation, reverse the removal procedure. Pay attention to the following details.

Install a **NEW** sealing washer on plug screw.

Torque plug screw to 45 N•m (33 lbf•ft).

Wipe off any oil spillage.

Install engine. Refer to *ENGINE REMOVAL AND INSTALLATION* subsection.

Refill oil tank with recommended oil and at the proper level. Refer to *ENGINE OIL REPLACEMENT* at the beginning of this subsection.

OIL PUMP GEARS

The oil pump gears are located on the MAG side, behind the magneto cover.

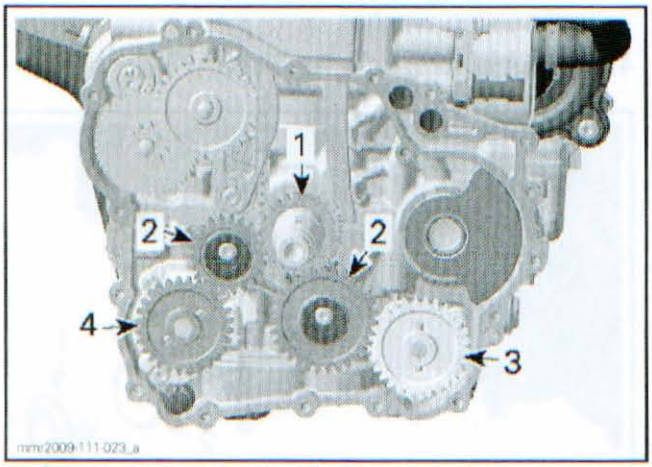

1. *Oil pump drive gear*
2. *Intermediate gears*
3. *Oil pump gear - pressure pump*
4. *Oil pump gear - suction pumps*

Oil Pump Gear Removal

1. Remove engine from vehicle. Refer to *ENGINE REMOVAL AND INSTALLATION* subsection.
2. Refer to *MAGNETO SYSTEM* subsection to remove:
   - Magneto cover
   - Rotor
   - Sprag clutch gear.
3. Unscrew oil pump intermediate gear screws.

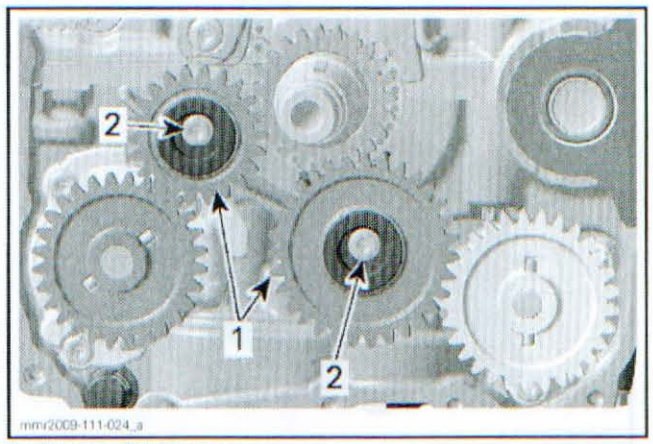

1. *Intermediate gears*
2. *Retaining screws*

4. Remove bearing sleeves and oil pump intermediate gears.

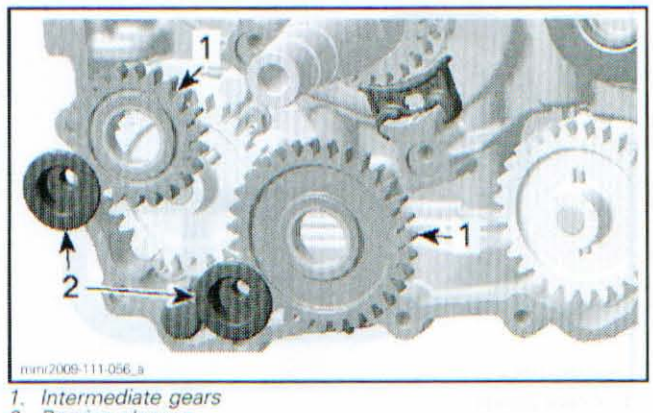

1. *Intermediate gears*
2. *Bearing sleeves*

5. Remove oil pump gears and needle pins.

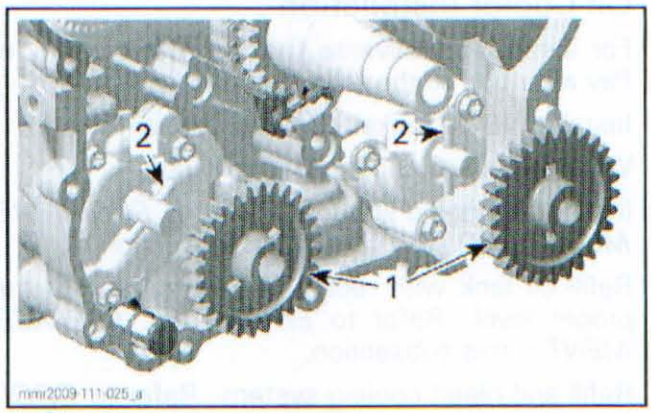

1. *Oil pump gears*
2. *Needle pins*

Oil Pump Gear Inspection

Inspect gears for wear, cracks or other damage.

Replace if damaged.

www.midwestmanuals.com

Oil Pump Gear Installation

For installation, reverse the removal procedure. Pay attention to the following details.

1. Ensure not to mix up the oil pump gears, see next illustration.
   - 1.1 Install the BROWN oil pump gear (29 teeth) on oil pressure pump.
   - 1.2 Install the BLACK oil pump gear (28 teeth) on oil suction pump.

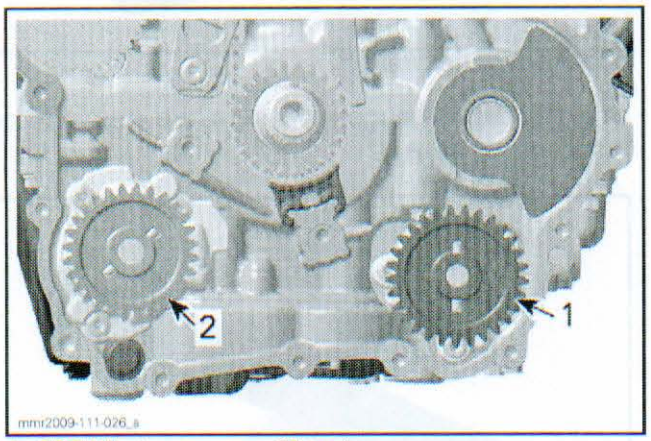

1. BROWN oil pump gear - 29 teeth
2. BLACK oil pump gear - 28 teeth

2. Apply engine oil on bearing sleeves of intermediate gear during installation.
3. Install all other removed parts.

OIL PRESSURE PUMP

The oil pressure pump is located in the cylinder block, behind the magneto cover.

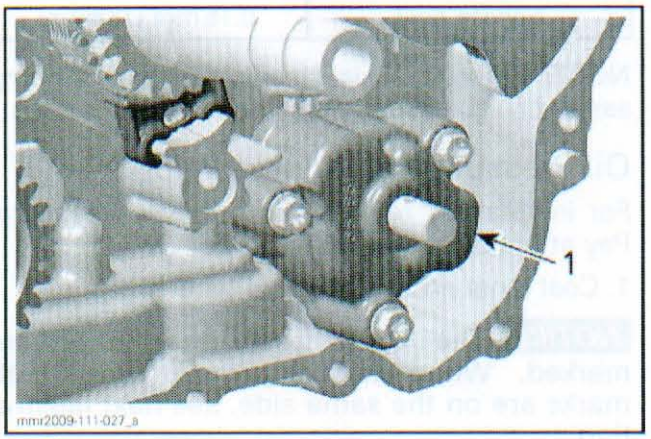

1. Oil pressure pump

Oil Pressure Pump Removal

1. Remove engine from vehicle. Refer to *ENGINE REMOVAL AND INSTALLATION* subsection.
2. Remove *OIL PUMP GEARS*, see procedure in this subsection.
3. Unscrew oil pump cover.

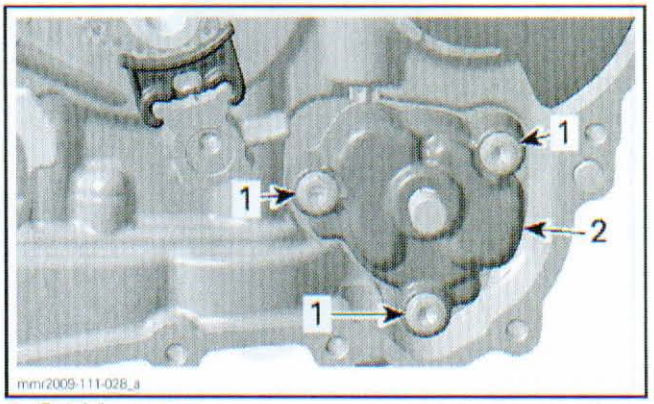

1. Retaining screws
2. Oil pump cover

4. Remove the following parts.

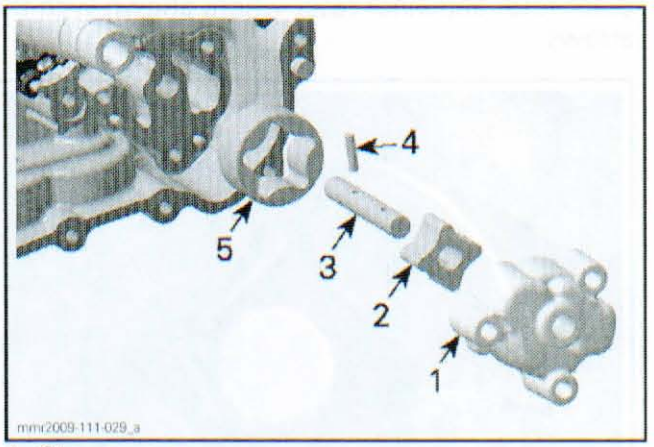

1. Oil pump cover
2. Inner rotor
3. Oil pump shaft
4. Needle pin
5. Outer rotor

Oil Pressure Pump Inspection

Inspect oil pump and oil pump cover bore for marks, scratches or other damages. If so, replace damaged parts.

Check oil pump cover for damages and for surface straightness with a straight edge.

Check inner rotor for corrosion pin holes or other damages. If so, replace inner and outer rotor at the same time.

www.midwestmanuals.com

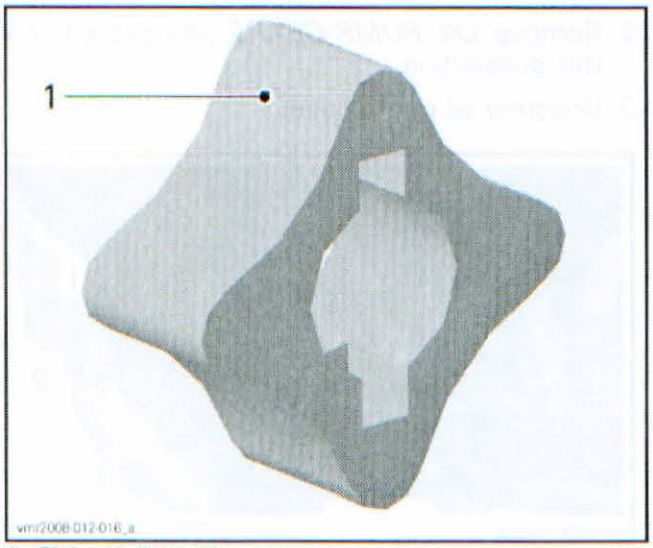

1. Pitting on the teeth

Radial Clearance

Using a feeler gauge, measure the clearance of outer rotor and inner rotor where shown with the arrows.

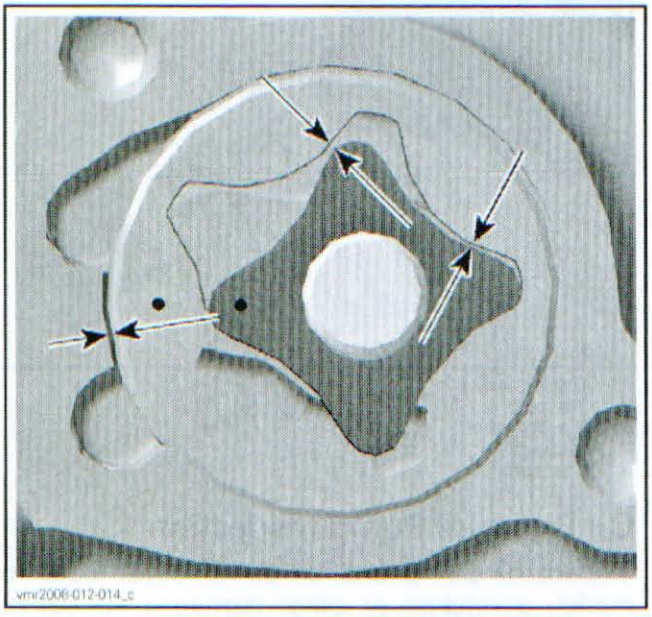

OIL PUMP RADIAL CLEARANCE	
Service limit	0.25 mm (.0098 in)

NOTE: If clearance of inner and outer rotors exceeds the tolerance, replace oil pump.

Axial Clearance

Measure outer rotor thickness with a micrometer.

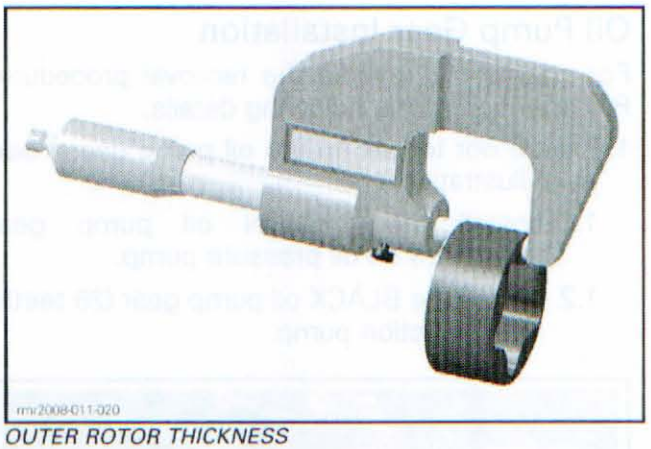

OUTER ROTOR THICKNESS

Using a depth gauge, measure the depth of oil pump cover bore.

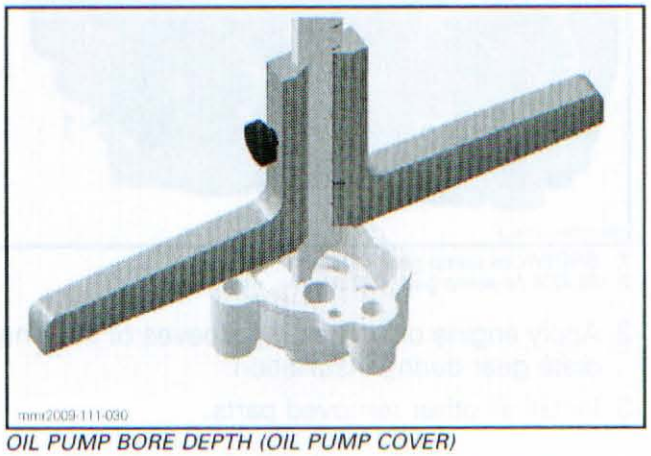

OIL PUMP BORE DEPTH (OIL PUMP COVER)

Substract bore depth from rotor thickness to obtain axial clearance.

OIL PUMP AXIAL CLEARANCE	
Service limit	0.15 mm (.0059 in)

NOTE: When the axial clearance of the oil pump assembly increases, the oil pressure decreases.

Oil Pressure Pump Installation

For installation, reverse the removal procedure. Pay attention to the following details.

1. Coat inner and outer rotors with engine oil.

NOTICE The outer and inner rotor are marked. When installing, make sure both marks are on the same side, see next illustration.

www.midwestmanuals.com

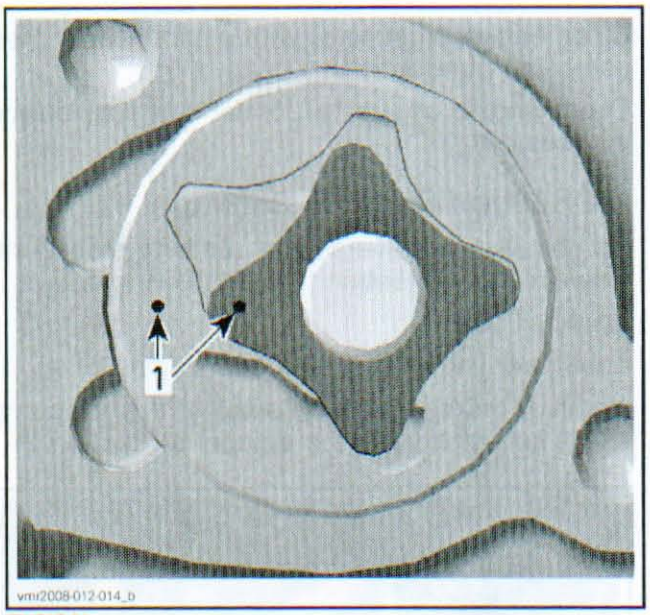

TYPICAL
1. Marks on inner and outer rotor

After installation of the remaining parts, check for smooth operation of the oil pump assembly.

After engine is completely reassembled, start engine and make sure oil pressure is within specifications (refer to *ENGINE OIL PRESSURE* in this subsection).

OIL SUCTION PUMPS

The engine is equipped with two oil suction pumps. Both pumps are integrated into one oil suction pump module.

The oil suction pump module is located in the cylinder block, behind the magneto cover.

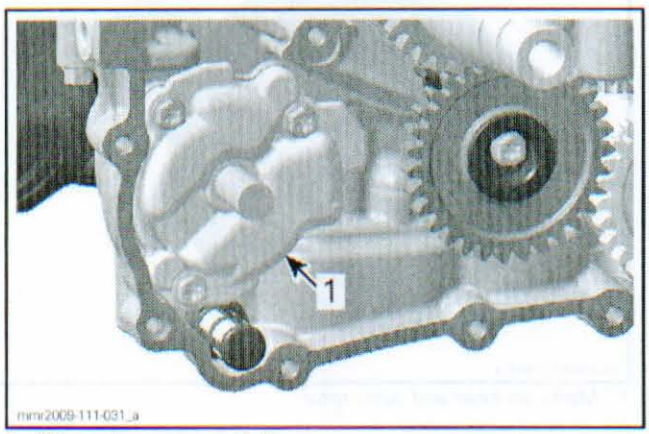

1. Oil suction pump module

The 26 mm (1.024 in) large oil suction pump sucks oil from the crankshaft and PTO chamber, back to the oil reservoir.

The 14 mm (.551 in) small oil suction pump sucks oil from the magneto chamber, back to the oil reservoir.

Oil Suction Pump Removal

1. Remove engine from vehicle. Refer to *ENGINE REMOVAL AND INSTALLATION* subsection.
2. Remove *OIL PUMP GEARS*, see procedure in this subsection.
3. Unscrew and remove oil pump cover.

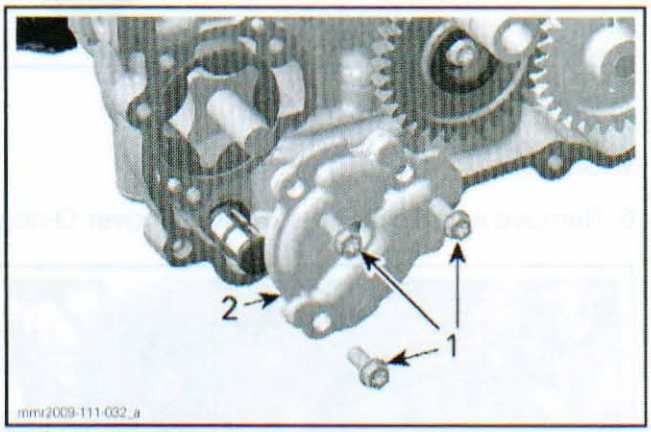

1. Retaining screws
2. Oil pump cover

4. Remove the following parts of the large oil suction pump:

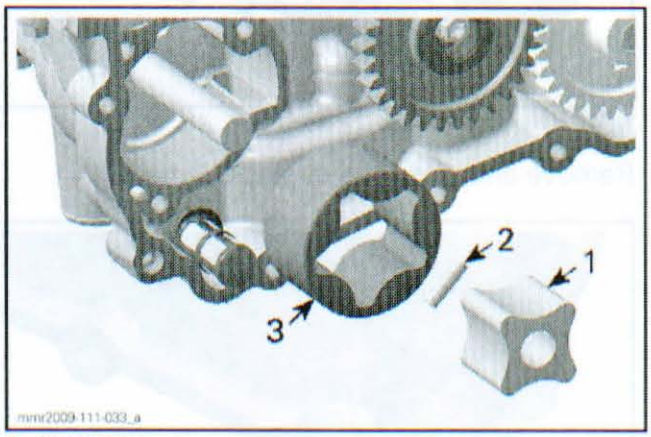

1. Inner rotor
2. Needle pin
3. Outer rotor

5. Remove the following parts of the small oil suction pump:

www.midwestmanuals.com

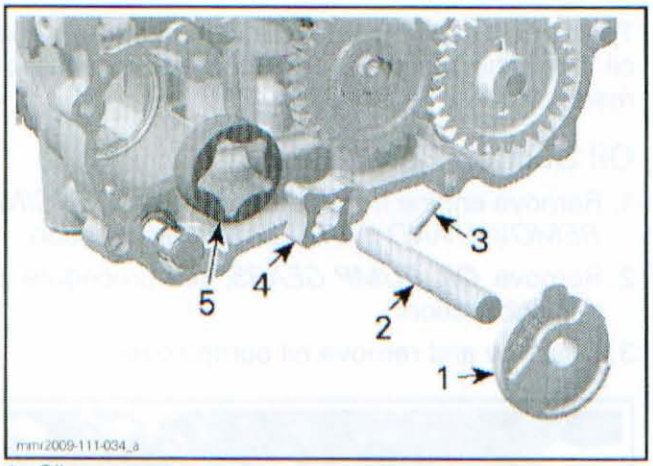

1. *Oil pump cover*
2. *Oil pump shaft*
3. *Needle pin*
4. *Inner rotor*
5. *Outer rotor*

6. Remove and discard the oil pump cover O-ring.

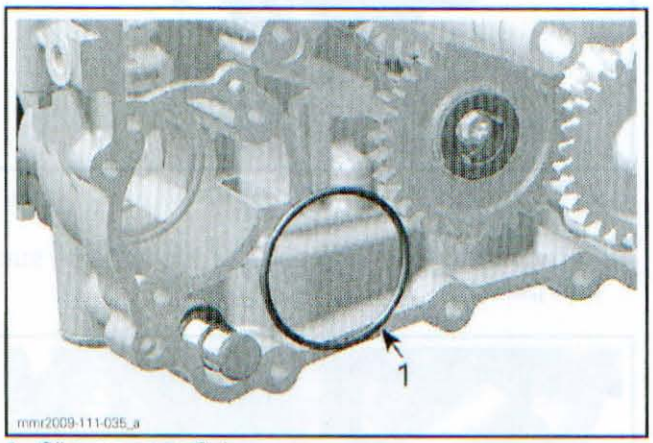

1. *Oil pump cover O-ring*

Remove and clean the engine oil strainer.

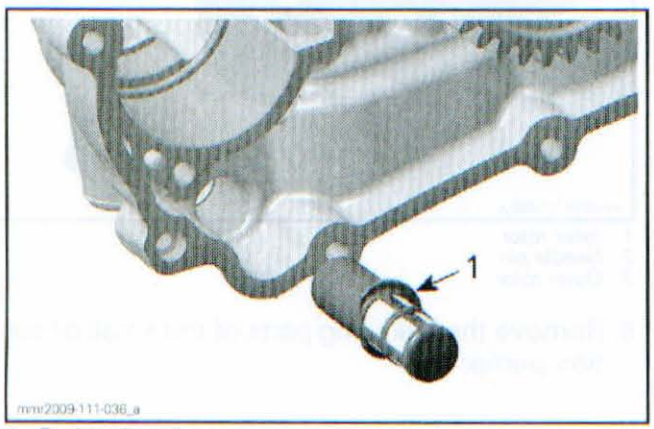

1. *Engine oil strainer*

Oil Suction Pump Inspection

The inspection of both oil suction pumps is the same as for the oil pressure pump. Refer to *OIL PRESSURE PUMP* in this subsection.

Clean engine oil strainer with a part cleaner then use an air gun to dry it.

Check engine oil strainer for damage and replace if necessary.

Oil Suction Pump Installation

For installation, reverse the removal procedure. However, pay attention to the following details.

Install oil strainer.

Coat inner and outer rotors with engine oil.

Install oil pump shaft with small oil suction pump rotors into its bore in the cylinder block.

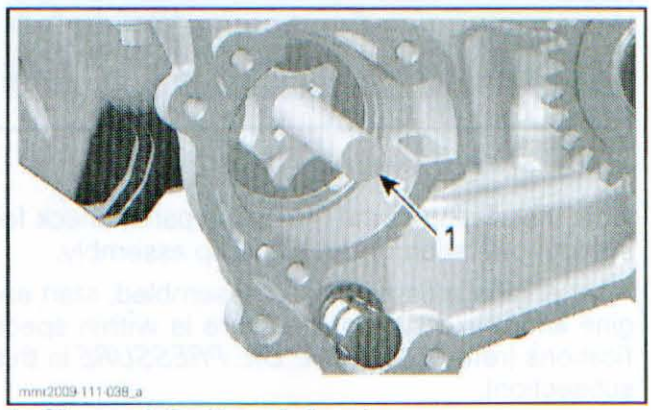

1. *Oil pump shaft with small oil suction pump*

NOTICE The outer and inner rotor are marked. When installing, make sure both marks are on the same side and are pointed toward the inside of cylinder block.

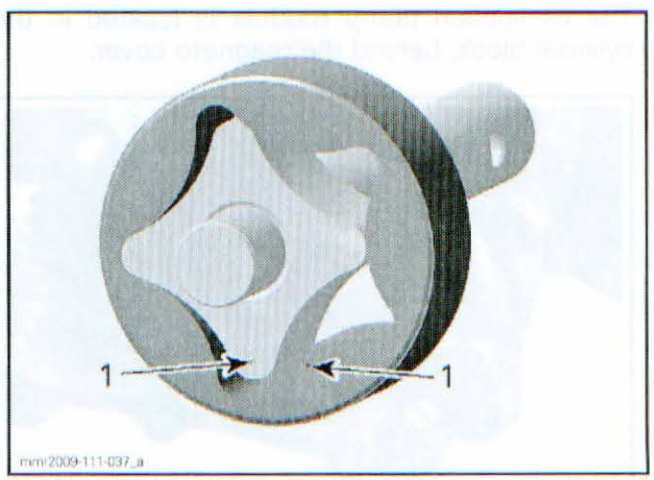

1. *Marks on inner and outer rotor*

Install a **NEW** oil pump cover O-ring.

www.midwestmanuals.com

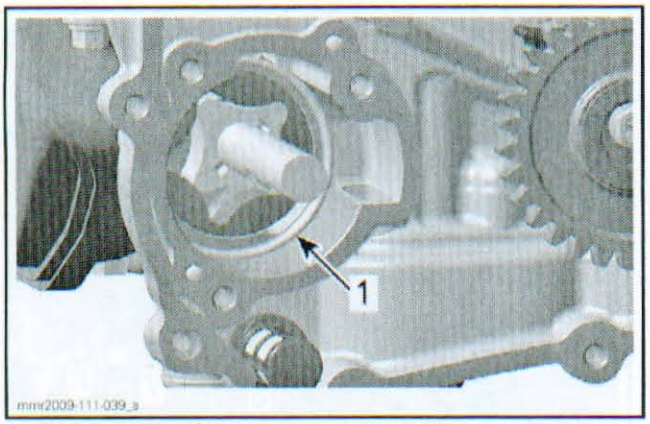

1. Oil pump cover O-ring

Install oil pump cover. Align the oil pump cover tab with the cylinder block recess. Ensure that cover fits properly in cylinder block.

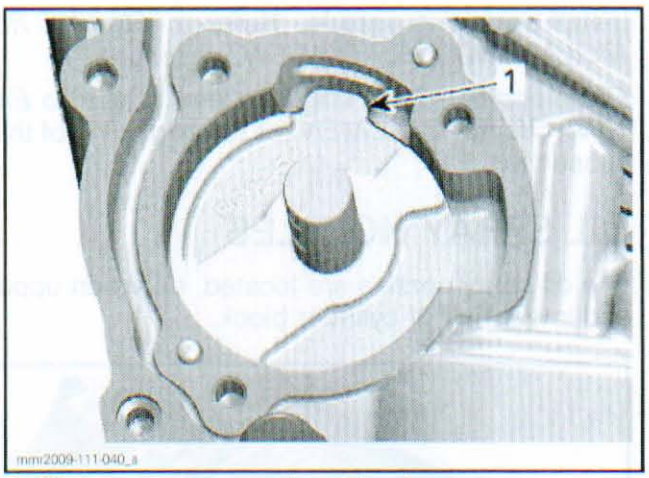

1. Oil pump cover tab properly positioned

Install needle pin, inner and outer rotor of large oil suction pump.

NOTE: The outer and inner rotor are marked. When installing, make sure both marks are on the same side.

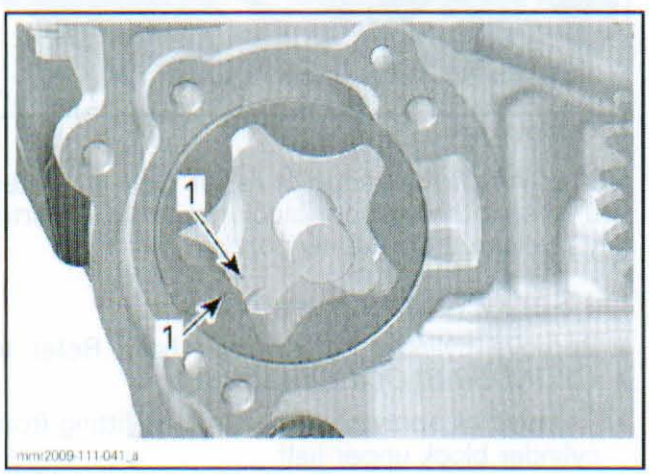

1. Marks on inner and outer rotor

Before installation of the oil pump cover, make sure engine oil strainer is in place.

After installation of the remaining parts, check for smooth operation of the oil pump assembly.

After engine is completely reassembled, start engine and make sure oil pressure is within specifications (refer to *ENGINE OIL PRESSURE* in this subsection).

OIL SUMP COVER

The oil sump cover is located on the bottom side of the engine.

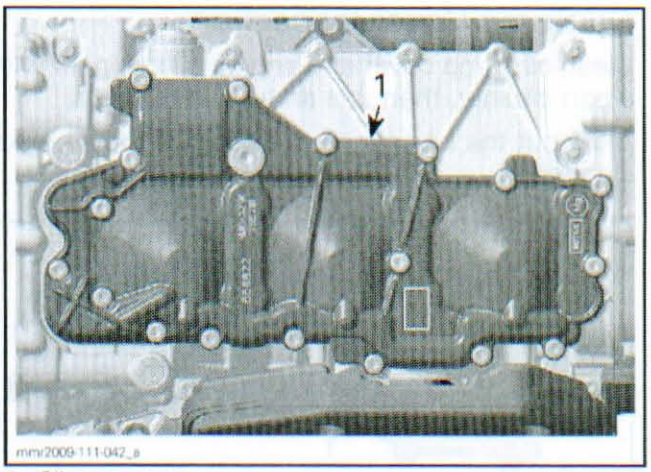

1. Oil sump cover

Oil Sump Cover Removal

1. Remove engine from vehicle. Refer to *ENGINE REMOVAL AND INSTALLATION* subsection.
2. Place a drain pan under oil sump cover.
3. Remove oil drain plug. Discard sealing washer.

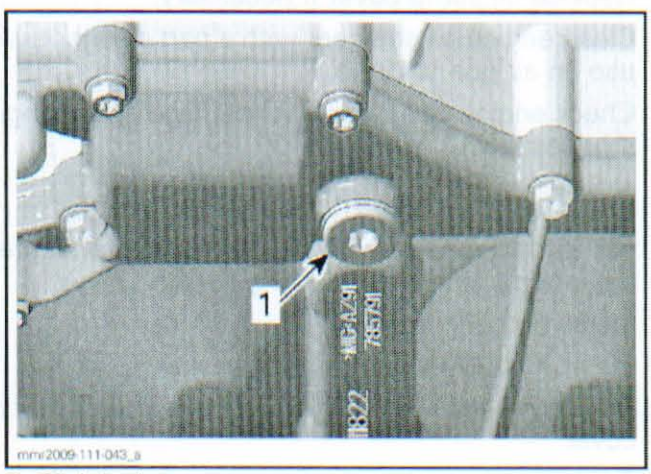

1. Oil drain plug

4. Unscrew oil sump cover retaining screws.
5. Remove oil sump cover. Discard gasket.

www.midwestmanuals.com

6. Remove and clean engine oil strainers.

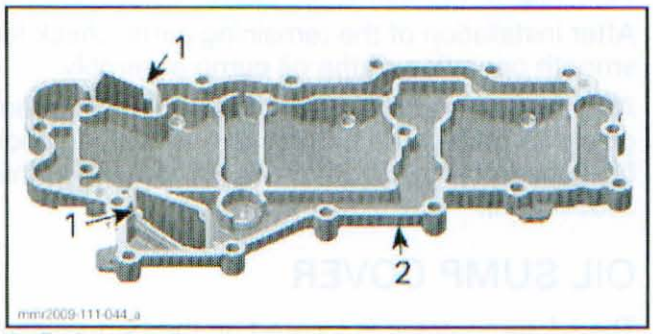

1. Engine oil strainers
2. Oil sump cover

Oil Sump Cover Inspection

Clean oil sump cover and engine oil strainers with a part cleaner, then use an air gun to dry it.

Blow out the oil orifices and check if they are not clogged.

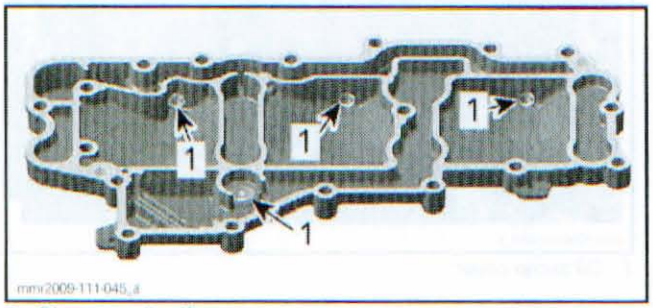

1. Blow out oil orifices

Check oil sump cover for cracks or other damages.

Check oil sump cover for flatness with straight edge.

Replace oil sump cover if necessary.

Clean engine oil strainers with a part cleaner then use an air gun to dry it.

Check engine oil strainers for damage and change if necessary.

Oil Sump Cover Installation

For installation, reverse the removal procedure. Pay attention to the following details.

Install both oil strainers.

Install a **NEW** oil sump cover gasket.

Properly reinstall engine oil strainers into oil sump cover.

Tighten the oil sump cover screws in accordance with the following pattern.

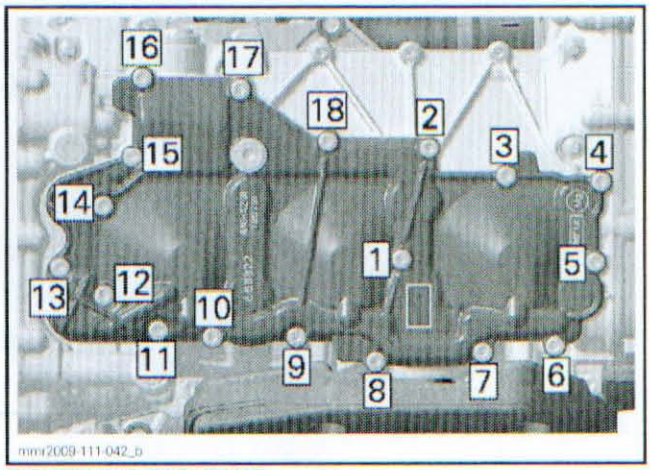

TIGHTENING SEQUENCE

Reinstall oil drain plug using a **NEW** sealing washer.

Install engine in vehicle. Refer to *ENGINE REMOVAL AND INSTALLATION* subsection.

Fill up engine oil and check oil level. Refer to *ENGINE OIL REPLACEMENT* at the beginning of this subsection.

OIL SPRAY NOZZLES

The oil spray nozzles are located, between upper and lower half of cylinder block.

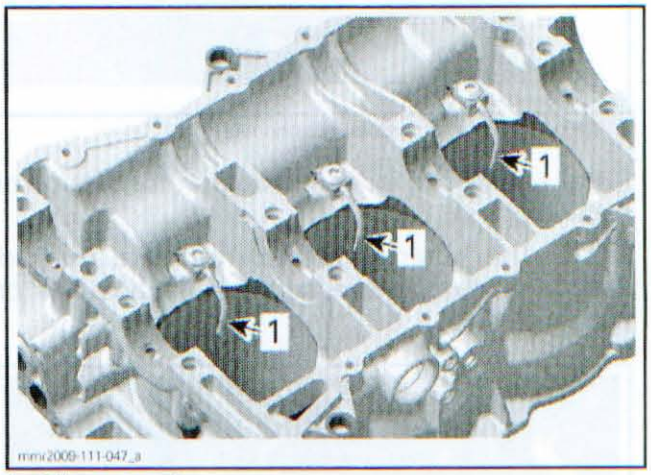

1. Oil spray nozzles

NOTE: When the scope of repair work obligates you to split the cylinder block, take this opportunity to clean the oil spray nozzles.

Oil Spray Nozzle Removal

1. Remove cylinder block lower half. Refer to *CYLINDER BLOCK* subsection.
2. Remove oil spray nozzle and Banjo fitting from cylinder block upper half.

www.midwestmanuals.com

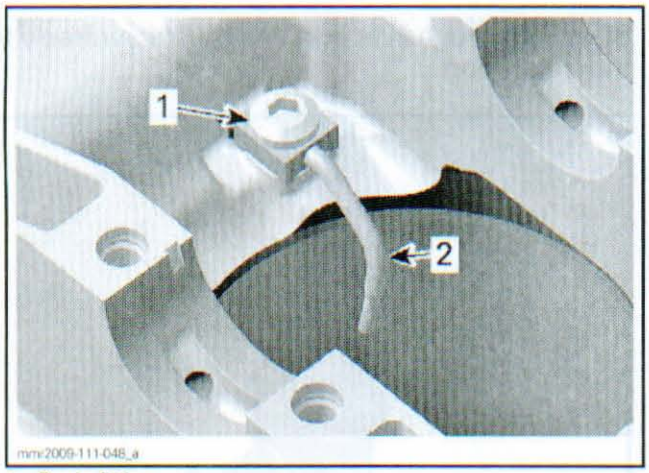

1. *Banjo fitting*
2. *Oil spray nozzle*

Oil Spray Nozzle Cleaning and Inspection

Clean oil spray nozzle and Banjo fitting from dirt and debris. Use a part cleaner, then an air gun and dry the parts.

Check if ball inside Banjo fitting moves freely.

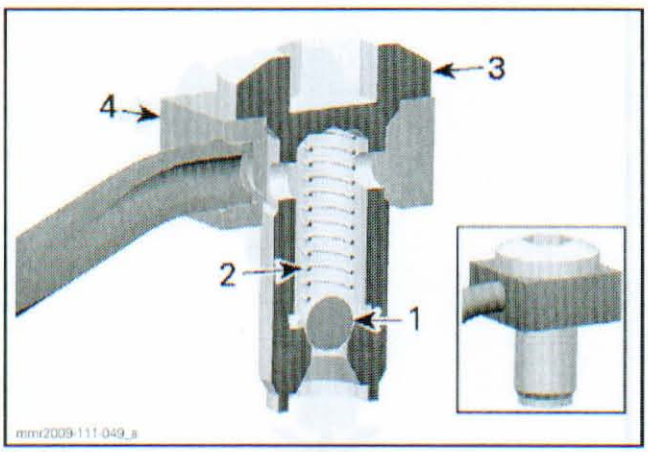

1. *Ball*
2. *Spring*
3. *Banjo fitting*
4. *Oil spray nozzle*

NOTE: If the oil spray nozzle is damaged or bent during work in the cylinder block, it must be replaced immediately.

Oil Spray Nozzle Installation

NOTICE At assembly make sure the contact surface of the oil spray nozzle is well fitted onto the cylinder block. If this is not ensured, the oil spray direction will change, causing potential engine damage.

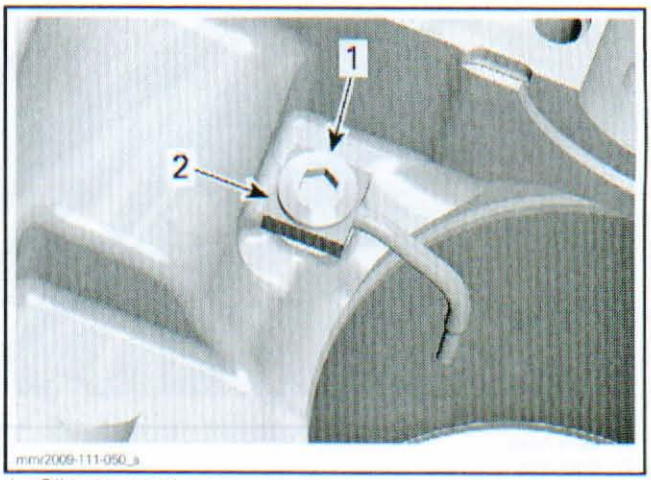

1. *Oil spray nozzle*
2. *Contact surface*

BREATHER

The engine is equipped with a breather which blocks engine oil and allows vapors to return in the intake system.

The breather is a mechanical device that does not require electrical supply for its operation.

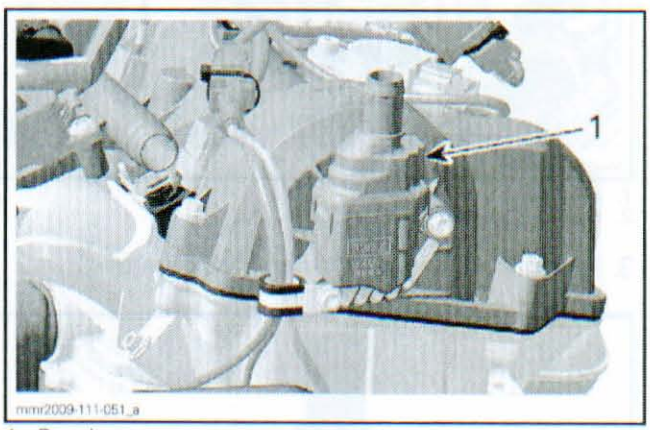

1. *Breather*

Breather Removal

1. Remove vent hose from breather.

www.midwestmanuals.com

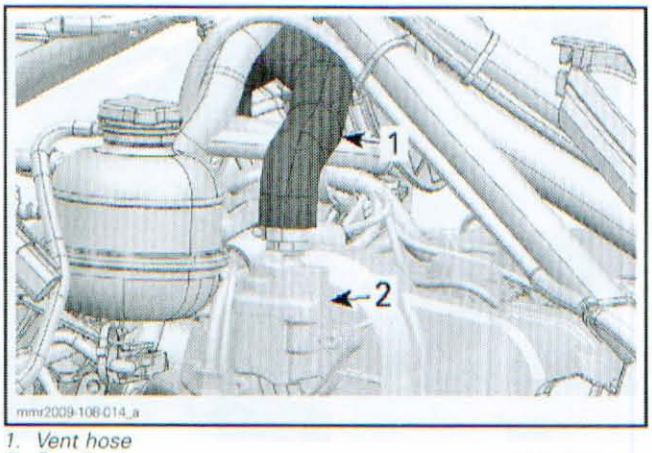

1. *Vent hose*
2. *Breather*

2. Unscrew and remove breather.

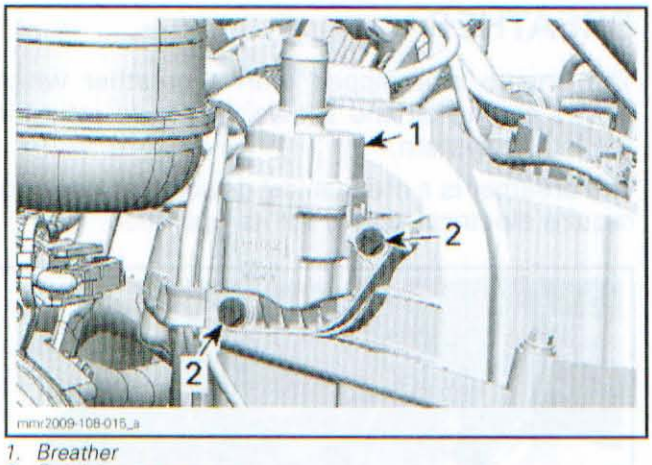

1. *Breather*
2. *Retaining screws*

3. Remove O-ring and V-ring from breather.

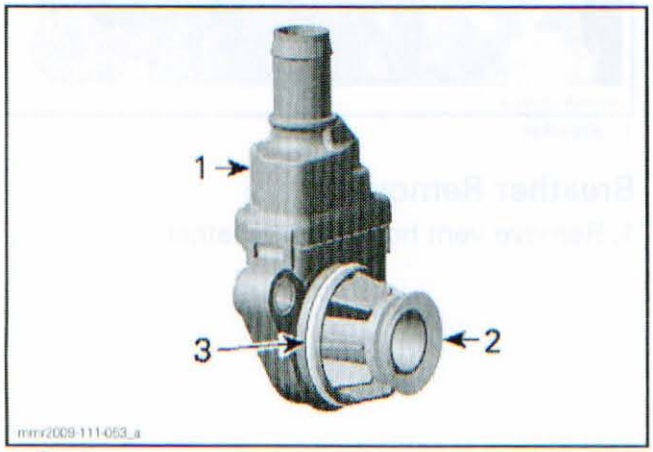

1. *Breather*
2. *V-ring*
3. *O-ring*

NOTE: Breather can not be disassembled.

Breather Inspection

Check breather for cracks or other damage.

Clean all contact surfaces of breather.

Blow air through inlet port. Air must flow freely to the outlet port.

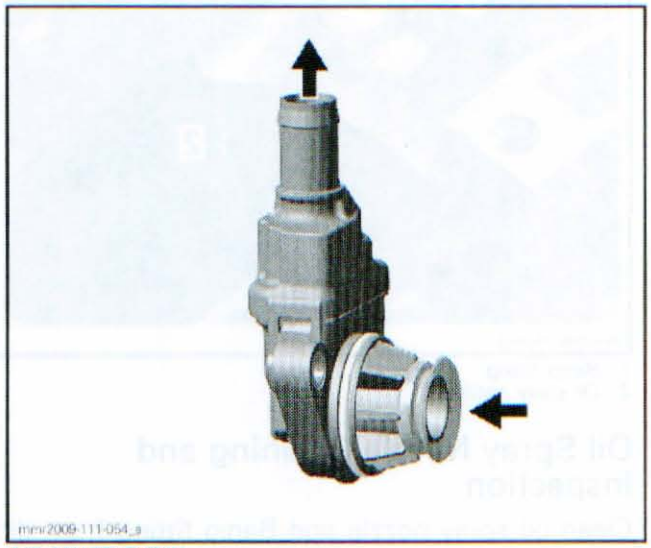

AIR MUST FLOW

Turn breather upside down and blow air again. Air must NOT flow out.

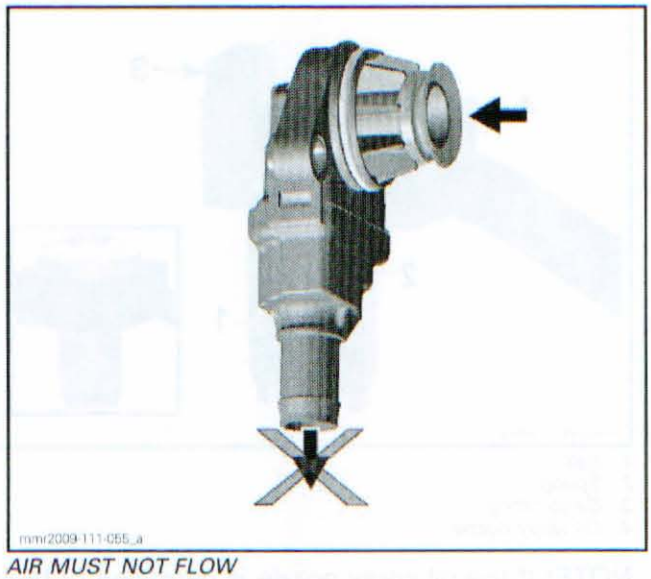

AIR MUST NOT FLOW

If test fails, replace the breather.

Breather Installation

For installation, reverse the removal procedure. Pay attention to the following detail.

Install breather with a **NEW** O-ring and a **NEW** V-ring.

www.midwestmanuals.com

COOLING SYSTEM

SERVICE TOOLS

Description	Part Number	Page
HANDLE	420 877 650	77
OETIKER PLIERS	295 000 070	71
OIL SEAL PUSHER	529 035 757	77
TEST CAP	529 035 991	70
VACUUM PRESSURE PUMP	529 021 800	70
WATER PUMP CERAMIC SEAL INSTALLER	529 035 766	77

SERVICE PRODUCTS

Description	Part Number	Page
BRP PREMIXED COOLANT	219 700 362	68
DOW CORNING 111	413 707 000	74
LOCTITE 380 (BLACK MAX)	413 408 300	81
SUPER LUBE GREASE	293 550 030	77

Midwest Manuals
sales@midwestmanuals.com
www.midwestmanuals.com

www.midwestmanuals.com

ENGINE COMPONENTS

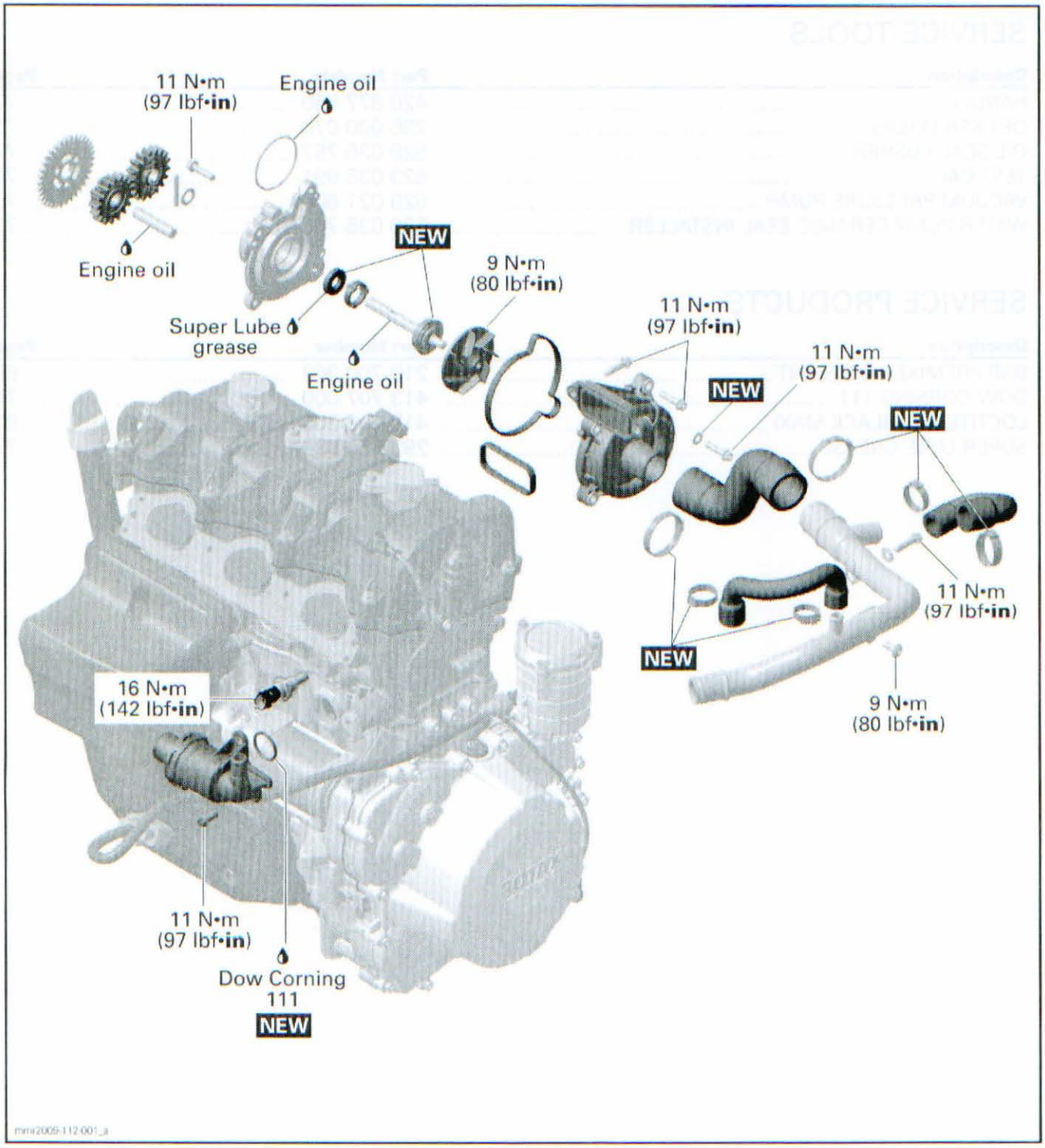

www.midwestmanuals.com

VEHICLE COMPONENTS

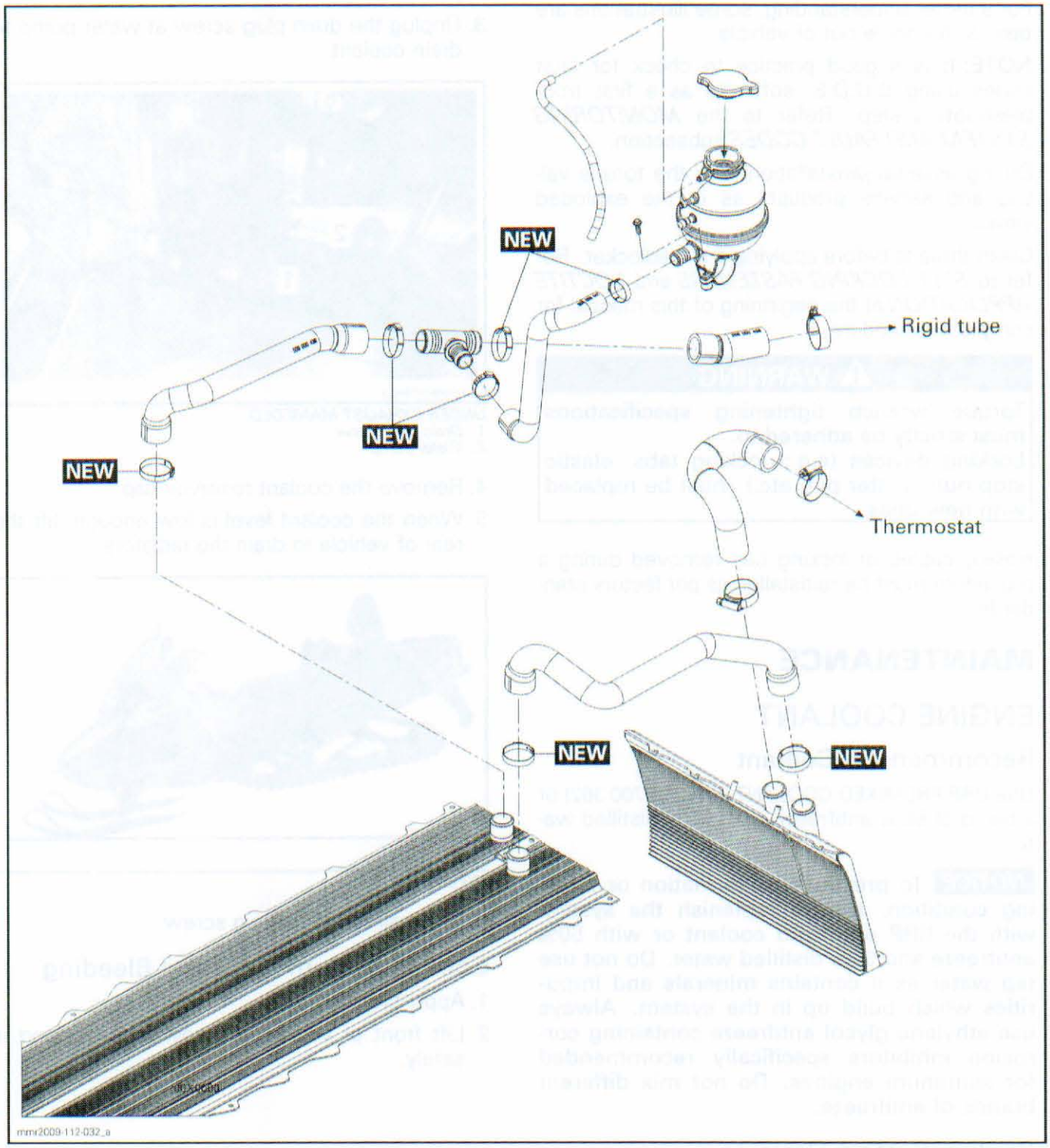

www.midwestmanuals.com

GENERAL

For a better understanding, some illustrations are take with engine out of vehicle.

NOTE: It is a good practice to check for fault codes using B.U.D.S. software as a first troubleshooting step. Refer to the *MONITORING SYSTEM AND FAULT CODES* subsection.

During assembly/installation, use the torque values and service products as in the exploded views.

Clean threads before applying a threadlocker. Refer to *SELF-LOCKING FASTENERS* and *LOCTITE APPLICATION* at the beginning of this manual for complete procedure.

⚠ WARNING

Torque wrench tightening specifications must strictly be adhered to.
Locking devices (e.g.: locking tabs, elastic stop nuts, cotter pin, etc.) must be replaced with new ones.

Hoses, cables or locking ties removed during a procedure must be reinstalled as per factory standards.

MAINTENANCE

ENGINE COOLANT

Recommended Coolant

Use BRP PREMIXED COOLANT (P/N 219 700 362) or a blend of 50% antifreeze with 50% distilled water.

NOTICE **To prevent rust formation or freezing condition, always replenish the system with the BRP premixed coolant or with 50% antifreeze and 50% distilled water. Do not use tap water as it contains minerals and impurities which build up in the system. Always use ethylene glycol antifreeze containing corrosion inhibitors specifically recommended for aluminum engines. Do not mix different brands of antifreeze.**

Cooling System Draining

⚠ WARNING

Never drain or refill the cooling system when engine is hot.

1. Remove hood. Refer to *BODY* subsection.
2. Place a large drain pan under the vehicle bottom pan.
3. Unplug the drain plug screw at water pump to drain coolant.

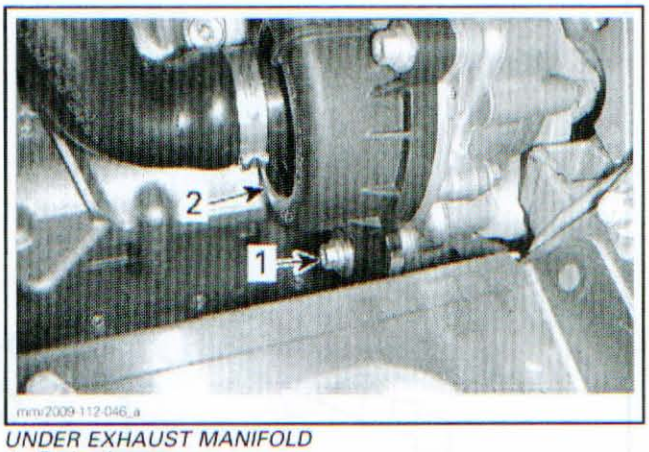

UNDER EXHAUST MANIFOLD
1. *Drain plug screw*
2. *Water pump*

4. Remove the coolant reservoir cap.
5. When the coolant level is low enough, lift the rear of vehicle to drain the radiators.

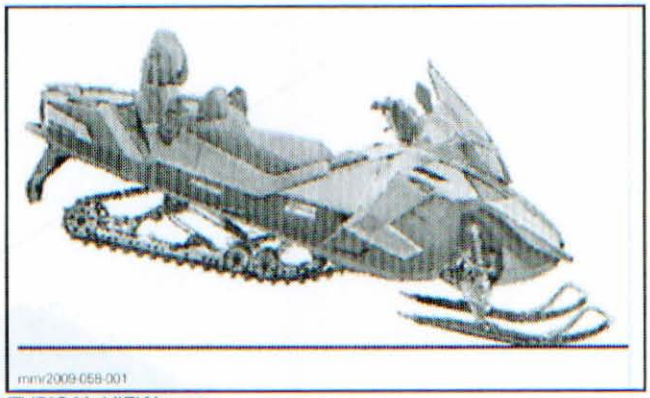

TYPICAL VIEW

6. Reinstall the drain plug screw.

Cooling System Refill and Bleeding

1. Apply braking brake.
2. Lift front of vehicle as shown and support it safely.

www.midwestmanuals.com



TYPICAL VIEW
A. At least 60 cm (24 in)

3. Refill coolant reservoir up to COLD LEVEL line.

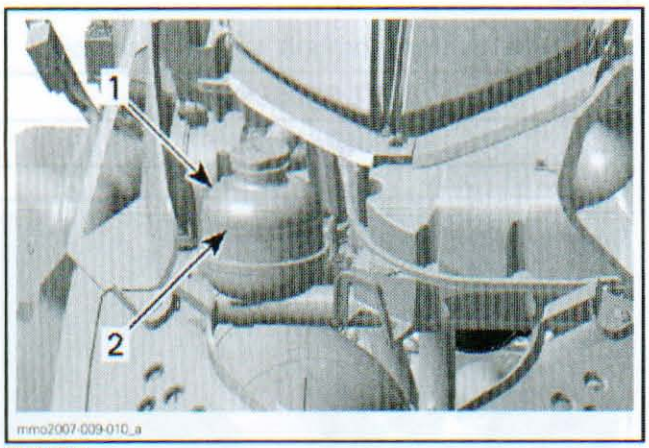

TYPICAL
1. Coolant reservoir
2. COLD LEVEL line

4. Start engine.
5. Refill up to line while engine is idling until rear radiators are warm to the touch (about 4 to 5 minutes).

NOTE: Make sure to maintain proper coolant level in reservoir to avoid air entering in the system.

6. Install pressure cap.
7. Lower vehicle back on the ground.

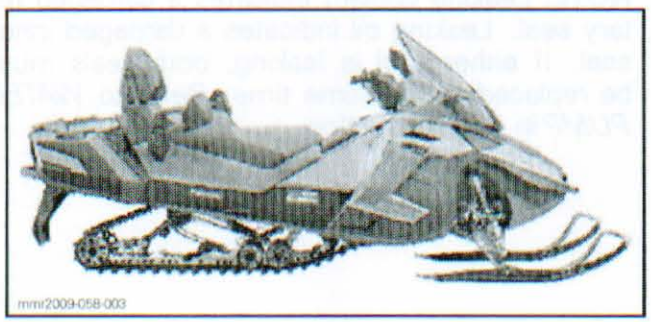

8. Lift rear of vehicle and support it safely.

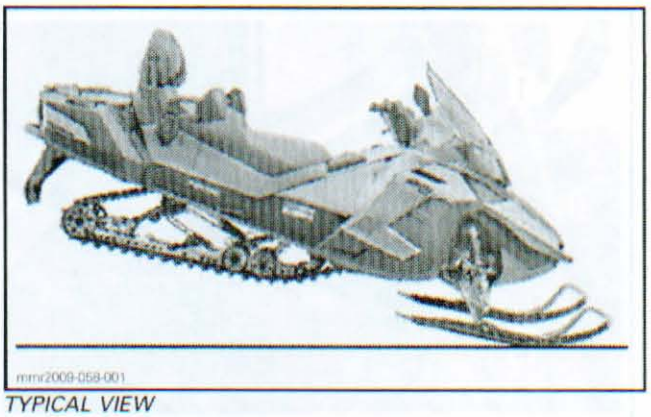

TYPICAL VIEW

⚠ WARNING

Before revving engine, ensure that the track is free of particles which could be thrown out while track is rotating. Keep hands, tools, feet and clothing clear of track. Always lift the snowmobile on a wide-base stand with a rear deflector panel. Ensure no one is standing in close proximity to the snowmobile, especially at the rear of the track. Centrifugal force could cause debris, damaged or loose studs, pieces of torn track, or an entire track to be violently thrown backwards out of the frame with tremendous force, possibly resulting in the loss of a leg or other serious injury.

9. Remove parking brake.
10. Activate throttle lever 3 - 4 times to bring engine speed to 7000 RPM.
11. Apply the brake.
12. Lower vehicle back on ground.
13. Stop engine.



14. Add coolant up to 15 mm (1/2 in) above the COLD LEVEL line.

www.midwestmanuals.com

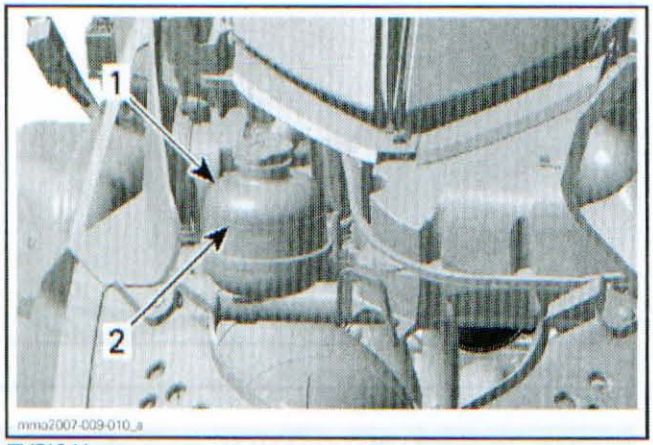

TYPICAL
1. *Coolant reservoir*
2. *Coolant 15 mm (1/2 in) above COLD LEVEL line*

15. When engine has completely cooled down, recheck coolant level in coolant reservoir and refill up to line if needed.
16. Check coolant freezing point.

COOLANT RECOMMENDED FREEZING POINT
-37°C (-35°F)

17. Adjust mixture as necessary.
18. Reinstall removed parts.
19. Run vehicle a few minutes then recheck coolant level.

INSPECTION

COOLING SYSTEM LEAK TEST

NOTE: This test confirms if there is a leak in the cooling system, including the engine.

⚠ WARNING

To prevent potential burns, do not remove the radiator cap if the engine is hot.

Remove hood.

Install the TEST CAP (P/N 529 035 991) on coolant reservoir.

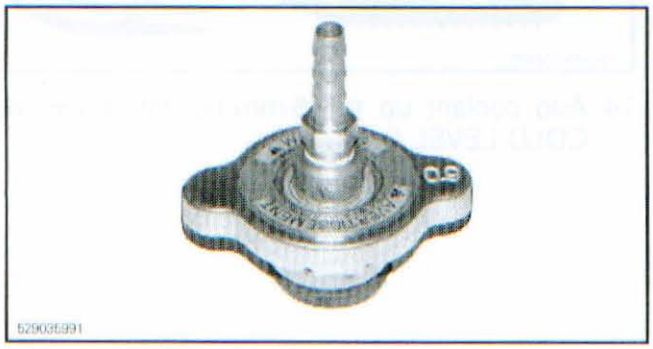

Connect the VACUUM PRESSURE PUMP (P/N 529 021 800) to the test cap nipple.



Pressurize system through coolant reservoir.

TEST PRESSURE
100 kPa (15 PSI)

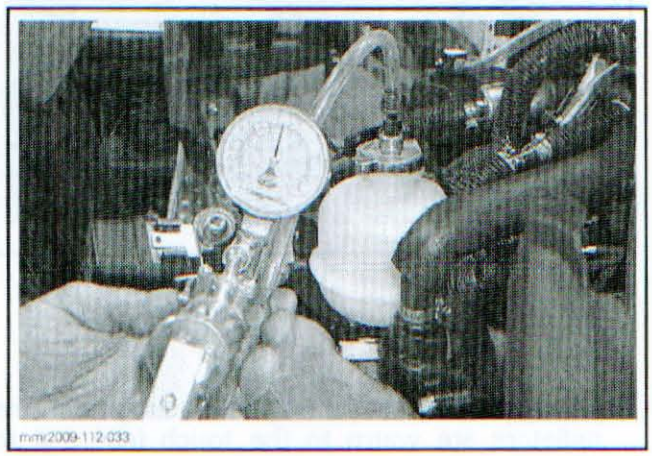

If pressure drops, check all hoses and engine for coolant leaks. Spray a soap/water solution and look for air bubbles.

Check the leak indicator hole if there is oil or coolant leaking.

NOTE: Leaking coolant indicates a damaged rotary seal. Leaking oil indicates a damaged inner seal. If either seal is leaking, both seals must be replaced at the same time. Refer to *WATER PUMP* in this subsection.

www.midwestmanuals.com

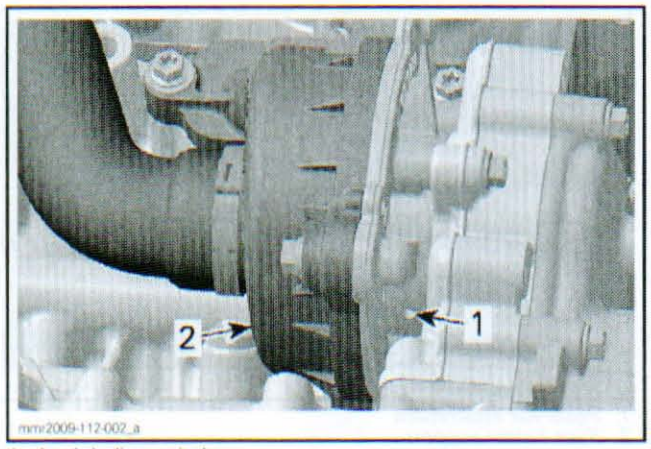

1. Leak indicator hole
2. Water pump

TROUBLESHOOTING

The following is provided to help in diagnosing the probable source of troubles. It is a guideline and should not be assumed to show all causes for all problems.

Always check for fault codes. If a fault code is detected, service the fault code first.

ENGINE OVERHEATING

1. Low coolant level.
   - *Refill and check for leaks (coolant leaking out of leak indicator hole, hoses or clamps missing or defective, or cylinder head gaskets leaks). Repair or replace.*
2. Air in cooling system.
   - *Refill and bleed cooling system.*
3. Defective thermostat (does not open when engine is warm up).
   - *Replace thermostat.*
4. Defective water pump.
   - *Inspect and replace defective components.*
5. Water temperature sensor defective.
   - *Check and replace.*
6. Dirty radiators.
   - *Clean radiator fins. Replace radiator(s) as required.*
7. Wrong coolant concentration.
   - *Check and adjust coolant concentration according to BRP's recommendations or replace coolant.*
8. Defective coolant reservoir cap.
   - *Replace cap.*

PROCEDURES

OETIKER CLAMPS

Oetiker Clamp Replacement

To secure or cut Oetiker clamps, use OETIKER PLIERS (P/N 295 000 070).

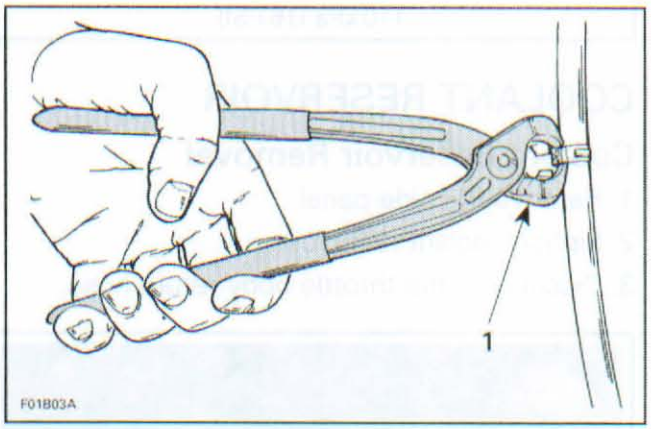

1. Cutting clamp

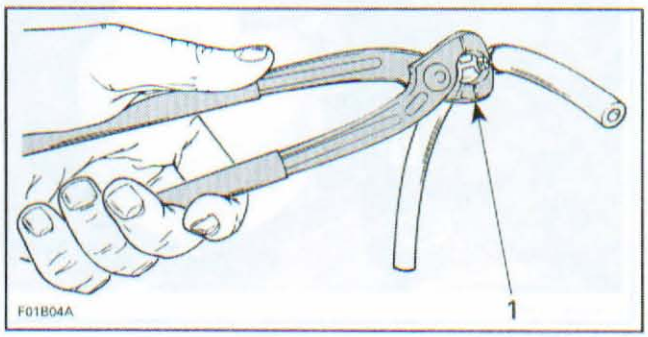

1. Securing clamp

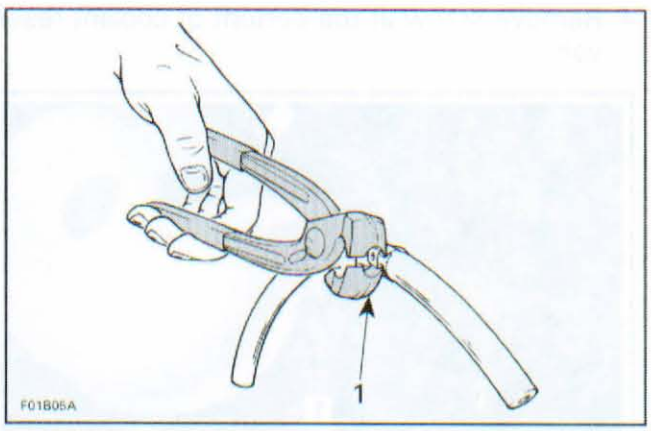

1. Securing clamp in limited access

www.midwestmanuals.com

COOLANT RESERVOIR CAP

Coolant Reservoir Cap Test

Using a pressure cap tester, check the efficiency of coolant reservoir cap. If the efficiency is weak, replace the cap.

CAP OPENING PRESSURE
110 kPa (16 PSI)

COOLANT RESERVOIR

Coolant Reservoir Removal

1. Remove RH side panel.
2. Siphon coolant reservoir.
3. Disconnect the throttle body return hose.

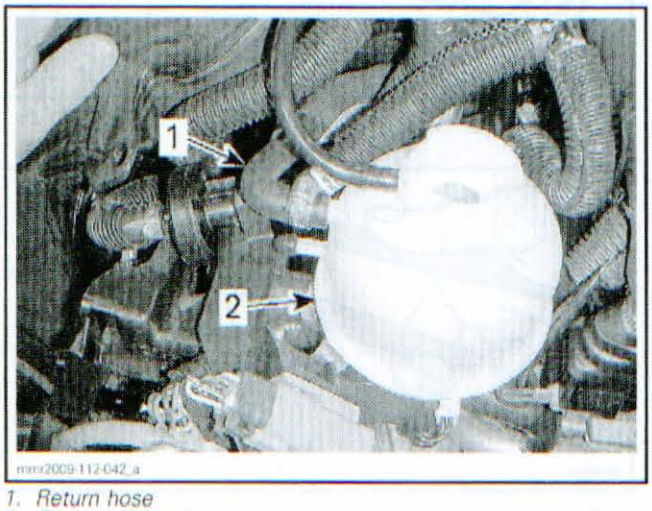

1. *Return hose*
2. *Coolant reservoir*

4. Remove screw at the bottom of coolant reservoir.



1. *Retaining screw*

5. Move the coolant reservoir toward the engine to free the reservoir attachment from the fuse holder support.



1. *Reservoir attachment*
2. *Fuse holder support*

6. Cut the Oetiker clamp securing the lower coolant hose to coolant reservoir.

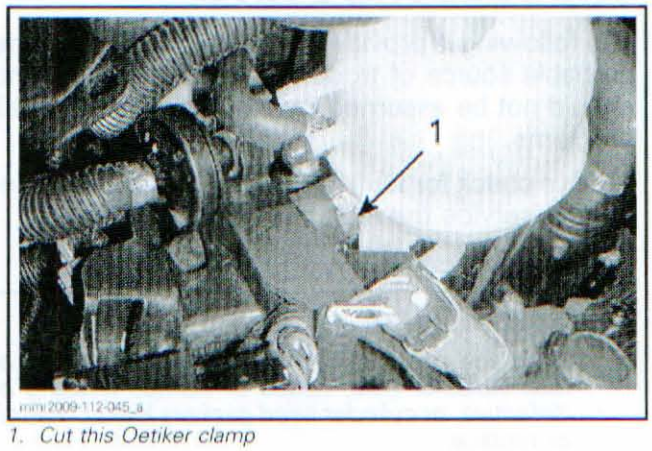

1. *Cut this Oetiker clamp*

Coolant Reservoir Inspection

Check if the reservoir is cracked or melted. Replace if necessary.

Coolant Reservoir Installation

For installation, reverse the removal procedure.

Refill cooling system as described in this subsection.

THERMOSTAT

The thermostat is a dual action type.

NOTE: Thermostat is integrated in a housing and is replaced as a complete unit.

www.midwestmanuals.com

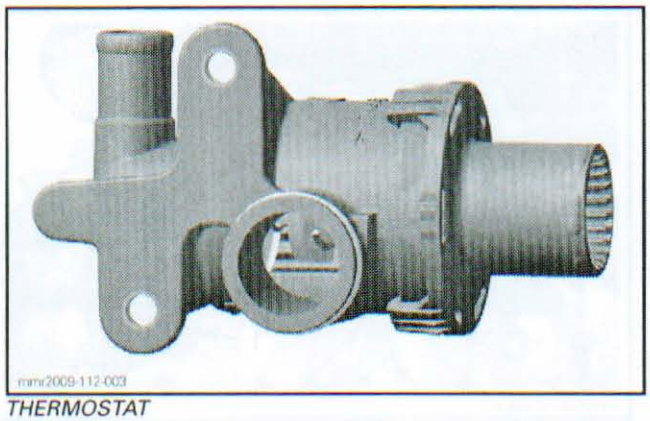

THERMOSTAT

Thermostat Removal

The thermostat is located on the rear side of engine above the electric starter.

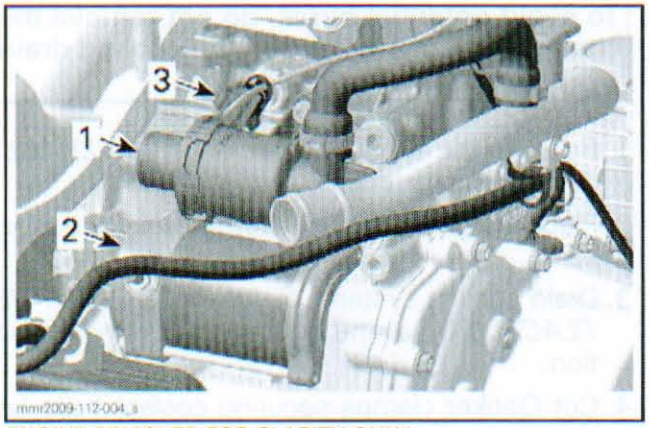

ENGINE REMOVED FOR CLARITY ONLY
1. *Thermostat*
2. *Electric starter*
3. *Coolant temperature sensor (CTS)*

1. Drain coolant system. Refer to *COOLING SYSTEM DRAINING* at the beginning of this subsection.
2. Move fuel tank rearward. Refer to *FUEL TANK AND FUEL PUMP* subsection.
3. Remove the driven pulley. Refer to *DRIVEN PULLEY AND COUNTERSHAFT* subsection.
4. Remove the clamp securing radiator hose to thermostat.

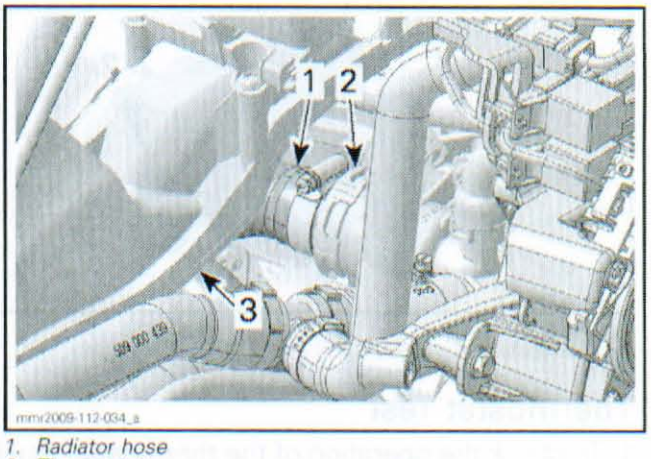

1. *Radiator hose*
2. *Thermostat*
3. *Intake manifold*

5. Cut Oetiker clamp retaining the coolant hose on the top of thermostat.

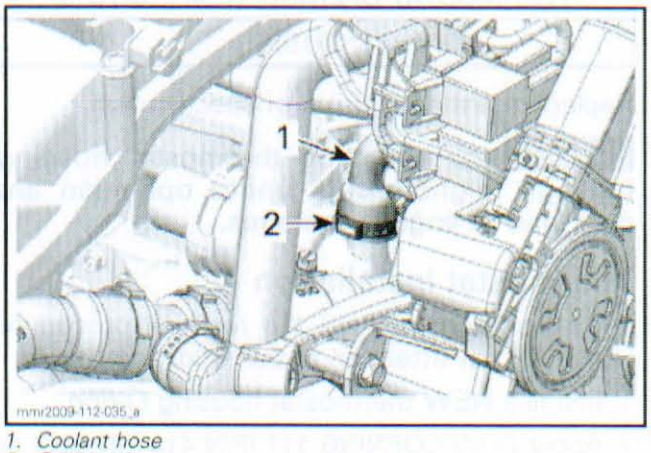

1. *Coolant hose*
2. *Oetiker clamp*

6. Remove retaining screws from the thermostat.

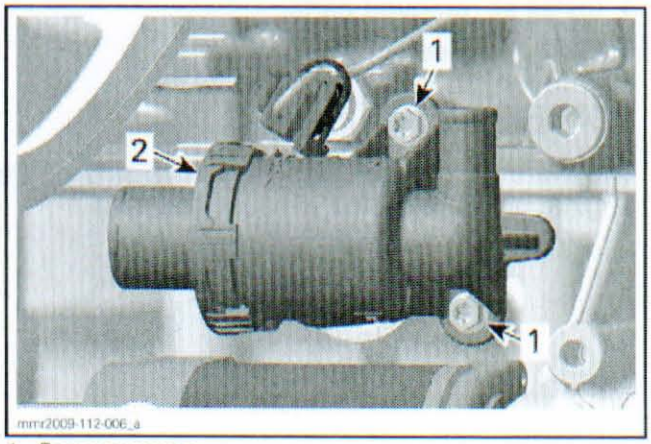

1. *Remove screws*
2. *Thermostat*

7. Pull out thermostat. Catch spilled coolant.
8. Remove the O-ring from the thermostat.

www.midwestmanuals.com

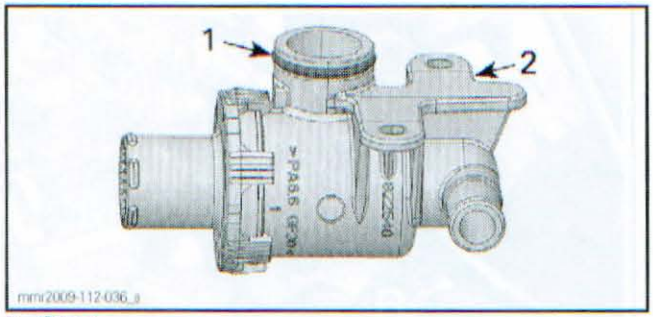

1. *O-ring*
2. *Thermostat housing*

Thermostat Test

1. To check the operation of the thermostat , soak it in water and heat the water.
2. Check thermostat opening temperature using a thermometer.

THERMOSTAT OPENING TEMPERATURE
75°C (167°F)

Replace thermostat if out of specification.

NOTICE **Do not open thermostat housing. Leakage might occurs under operation and may lead to engine damages.**

Thermostat Installation

For installation, reverse the removal procedure. However, pay attention to the following details.

1. Install a **NEW** thermostat housing O-ring.
2. Apply DOW CORNING 111 (P/N 413 707 000) on O-ring before installing the thermostat.
3. Install a **NEW** Oetiker clamp.
4. Install all removed parts.
5. Refill and bleed coolant circuit.

WATER PUMP

The water pump is located on front side of the engine, underneath the exhaust manifold.

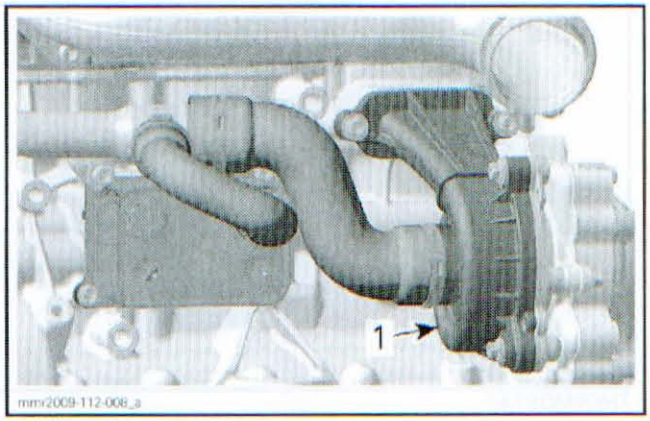

1. *Water pump*

Water Pump Removal

⚠ WARNING

To avoid potential burns, do not remove the coolant tank cap or loosen the cooling drain plug if the engine is hot.

1. Remove the exhaust pipe. Refer to *EXHAUST SYSTEM* subsection.
2. Place a large drain pan under the vehicle bottom pan.
3. Drain cooling system. Refer to *COOLANT REPLACEMENT* at the beginning of this subsection.
4. Cut Oetiker clamps securing coolant hose between the rigid tube and water pump.

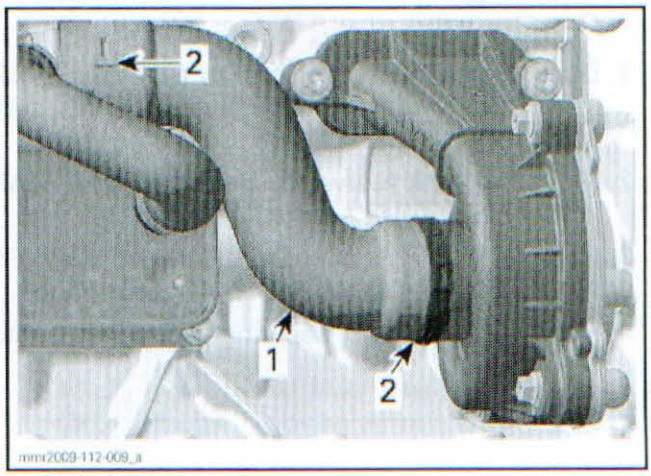

1. *Coolant hose*
2. *Oetiker clamps*

5. Remove the coolant hose to make room.
6. Remove screws retaining water pump module.

www.midwestmanuals.com

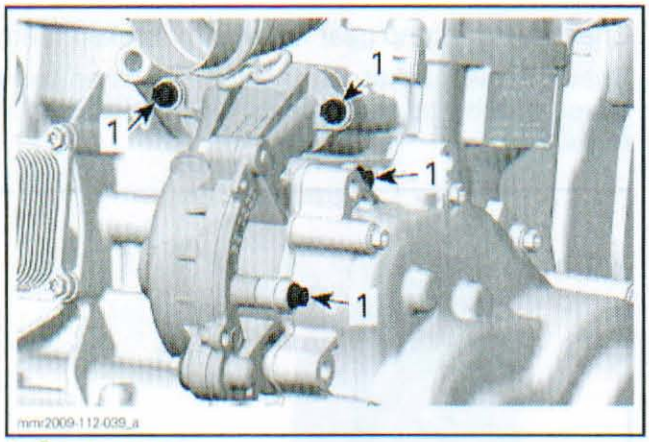

1. Remove screws

7. Pull water pump from engine and remove it from vehicle.

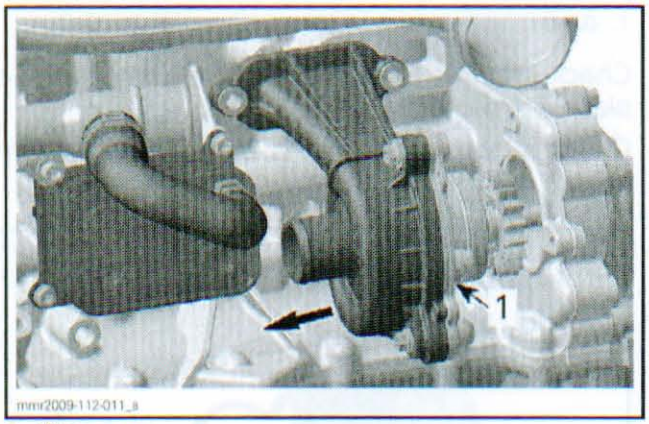

1. Water pump

8. Remove and discard the O-ring on water pump module.

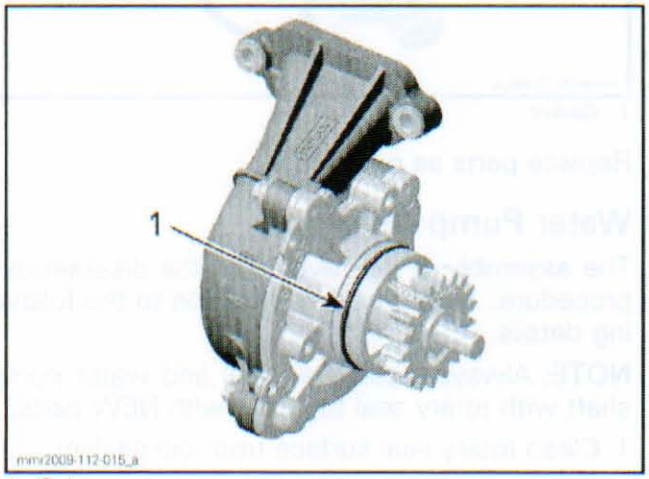

1. O-ring

Water Pump Disassembly

1. Remove screws retaining water pump housing.

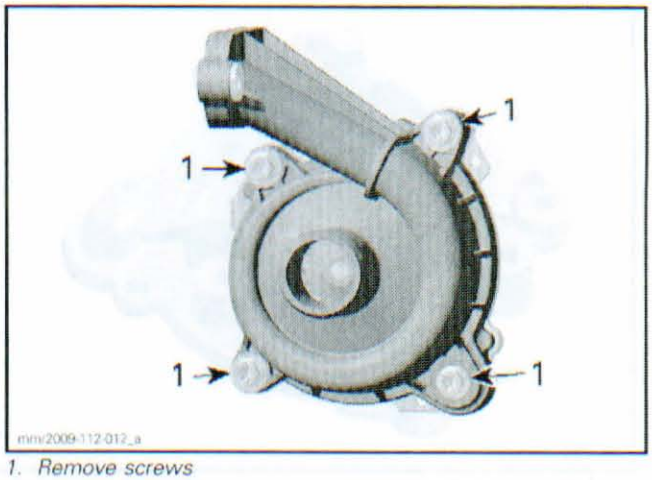

1. Remove screws

2. Remove water pump gear.

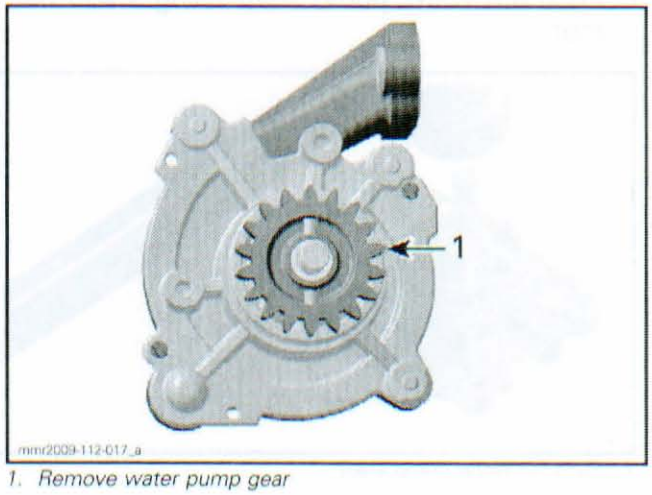

1. Remove water pump gear

3. Fix water pump shaft into a vise with aluminium jaws.
4. Unscrew the impeller counterclockwise using appropriate pliers.

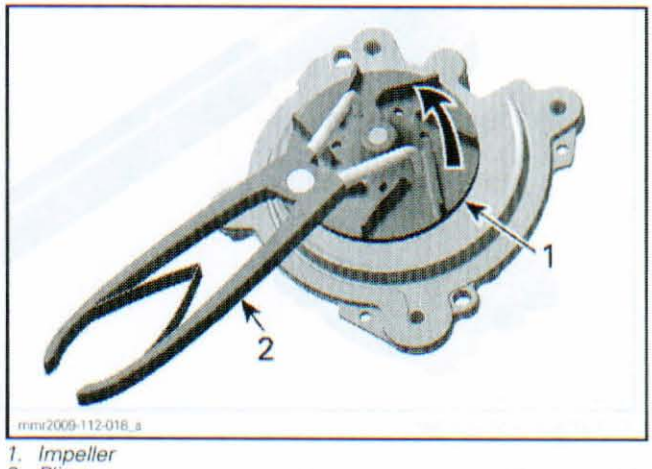

1. Impeller
2. Pliers

5. Remove needle pin and trust washer.

www.midwestmanuals.com

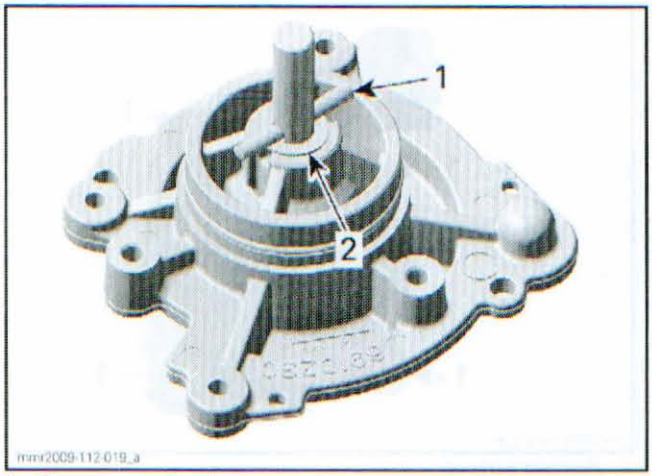

1. *Remove needle pin*
2. *Remove thrust washer*

6. Push out water pump shaft using a soft hammer.

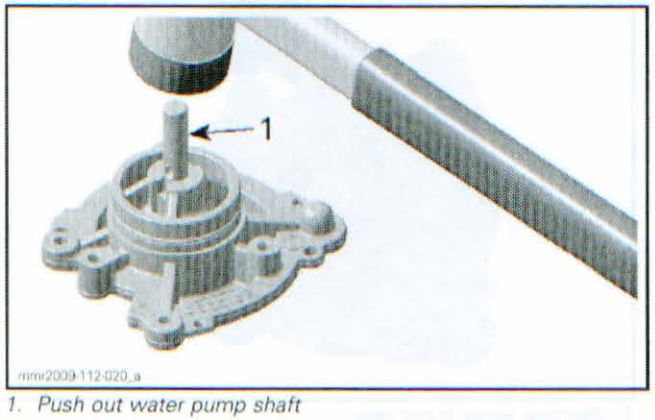

1. *Push out water pump shaft*

7. Extract oil seal and remaining parts of rotary seal with a pusher.

NOTE: Be careful not to damage the surface of the rotary seal bore in water pump housing.

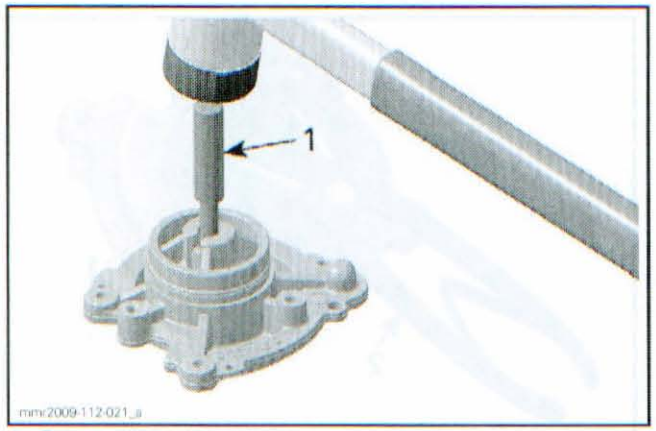

1. *Extract with pusher*

Water Pump Inspection

Check water pump housing for cracks or other visible damage.

Check water pump gear for wear or broken teeth.

Check if the gasket on the top of water pump housing is brittle, hard or damaged. Replace as required.

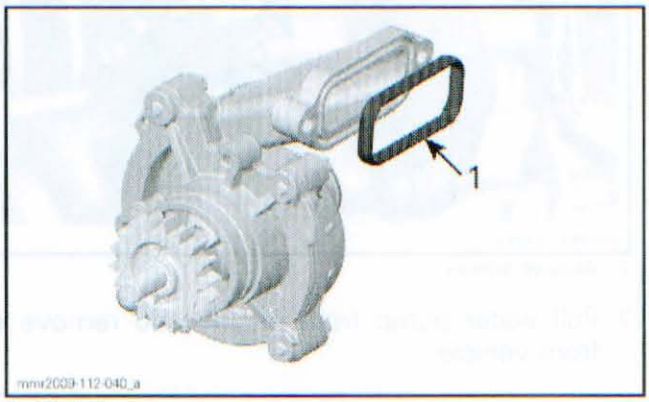

1. *Gasket*

Check impeller for cracks or other damage. Replace it if damaged.

Check if housing gasket is brittle, hard or damaged.

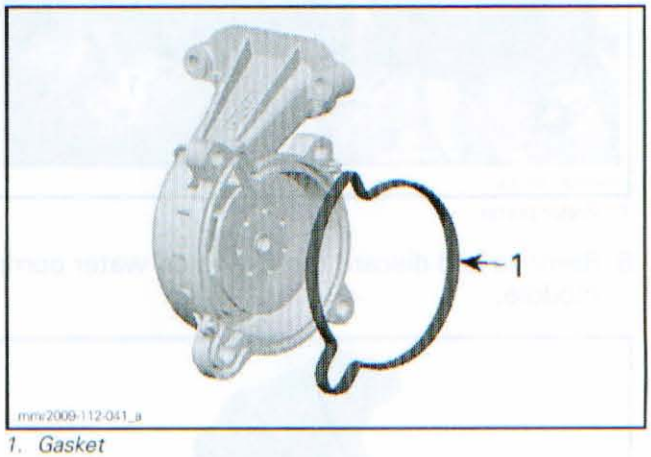

1. *Gasket*

Replace parts as necessary.

Water Pump Assembly

The assembly is the reverse of the disassembly procedure. However, pay attention to the following details.

NOTE: Always replace oil seal and water pump shaft with rotary seal together with NEW parts.

1. Clean rotary seal surface from old sealant.

www.midwestmanuals.com

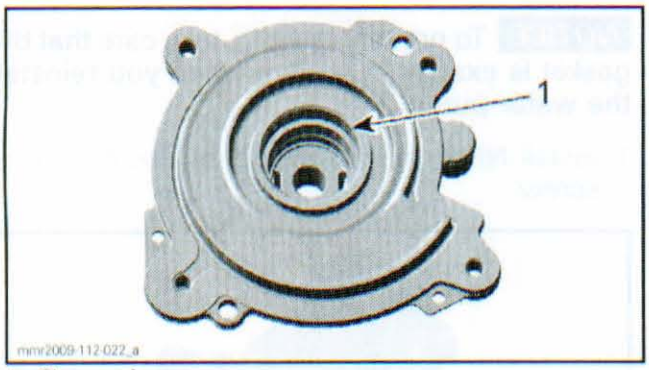

1. Clean surface

NOTE: Never use oil in the press fit area of the oil seal and rotary seal.

2. Use the OIL SEAL PUSHER (P/N 529 035 757) and the HANDLE (P/N 420 877 650) to install the oil seal.

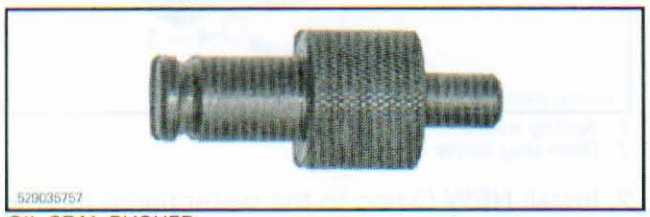

OIL SEAL PUSHER

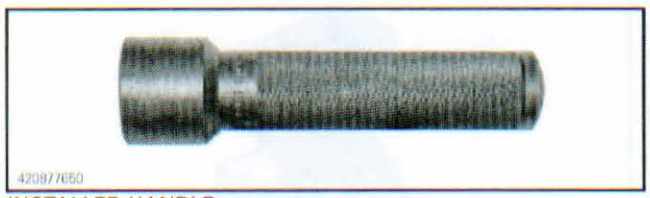

INSTALLER HANDLE

3. Apply SUPER LUBE GREASE (P/N 293 550 030) on sealing lip of the oil seal.

NOTE: When installing the oil seal on the pusher, make sure sealing lip faces outside.

4. Push **NEW** oil seal in place.

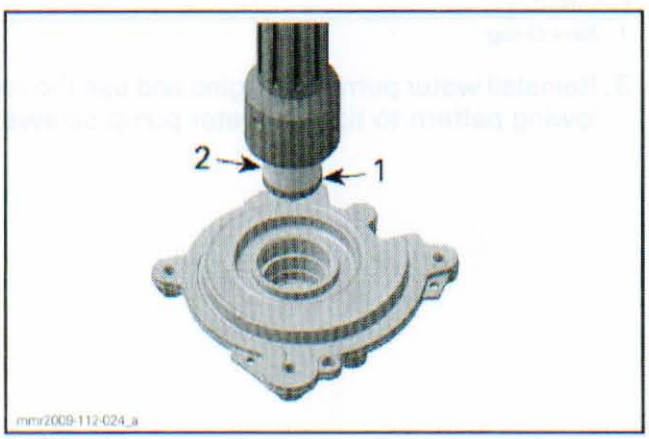

1. Oil seal
2. Oil seal pusher

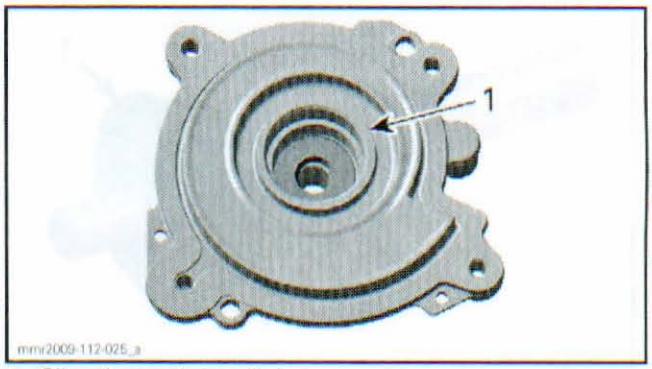

1. Oil seal properly installed

5. Install spacer ring into water pump housing.

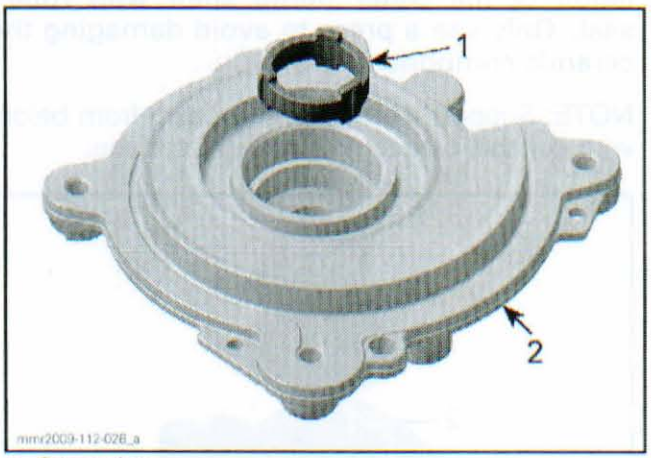

1. Spacer ring
2. Water pump housing

6. Slide **NEW** water pump shaft with rotary seal into water pump housing.

7. Properly install water pump shaft with rotary seal using a press and the WATER PUMP CERAMIC SEAL INSTALLER (P/N 529 035 766).



www.midwestmanuals.com

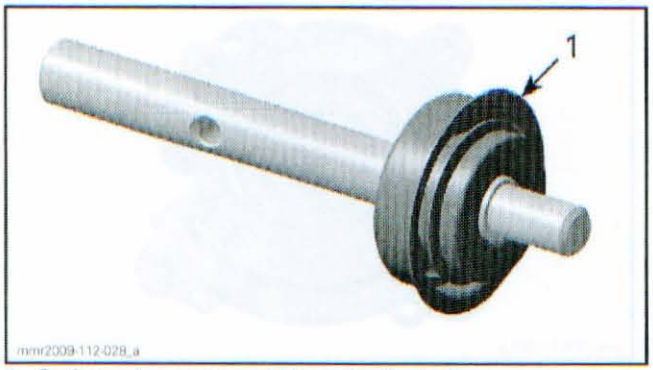

1. Surface where rotary seal is pushed by tool

NOTICE Never use a hammer for the installation of the water pump shaft with rotary seal. Only use a press to avoid damaging the ceramic component.

NOTE: Support water pump housing from below with suitable sleeve with straight surface.

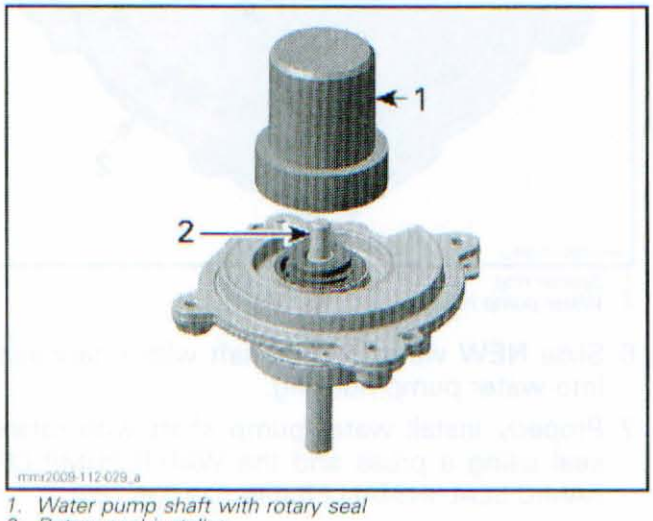

1. Water pump shaft with rotary seal
2. Rotary seal installer

NOTE: After installation, water pump shaft with rotary seal must rotate freely.

8. Properly reinstall remaining components, refer to procedures above.
9. Install the impeller.

NOTICE Be careful not to damage impeller wings during its installation.

10. Tighten screws of water pump housing in a crisscrossed sequence.

Water Pump Installation

The installation is the reverse of the removal procedure. However, pay attention to the following details.

NOTICE To prevent leaking, take care that the gasket is exactly in groove when you reinstall the water pump.

1. Install **NEW** sealing washer to the drain plug screw.

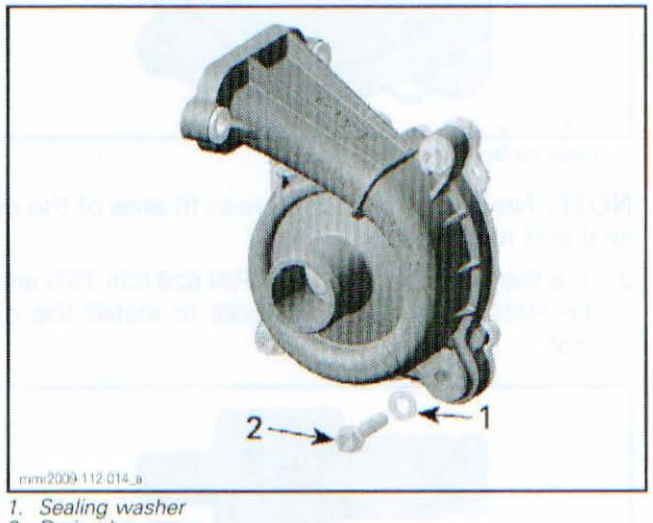

1. Sealing washer
2. Drain plug screw

2. Install **NEW** O-ring to the water pump module.

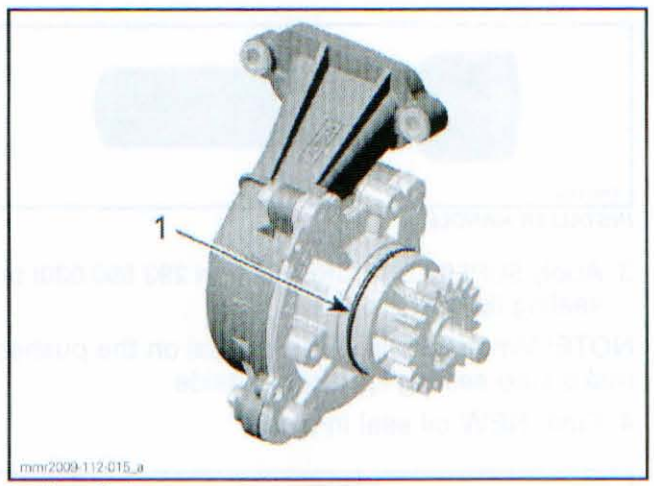

1. New O-ring

3. Reinstall water pump on engine and use the following pattern to tighten water pump screws.

www.midwestmanuals.com

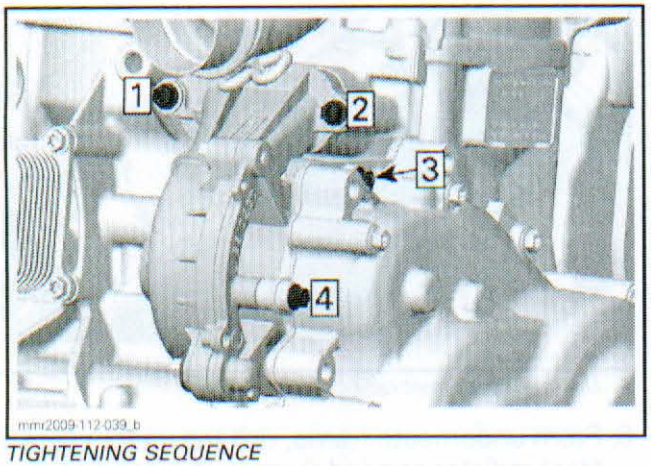

TIGHTENING SEQUENCE

WATER PUMP DRIVE GEARS

The water pump drive gears are located on the engine PTO side, behind the PTO cover.

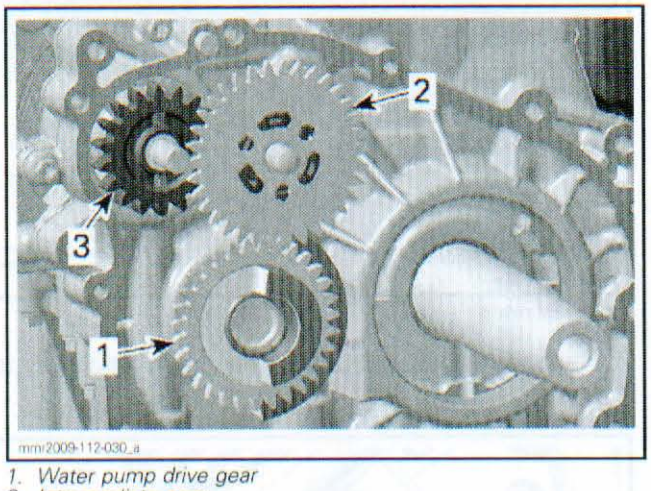

1. *Water pump drive gear*
2. *Intermediate gear*
3. *Water pump gear*

Water Pump Drive Gear Removal

1. Remove PTO cover, Refer to *CYLINDER BLOCK* subsection.
2. Remove intermediate gear and water pump gear.

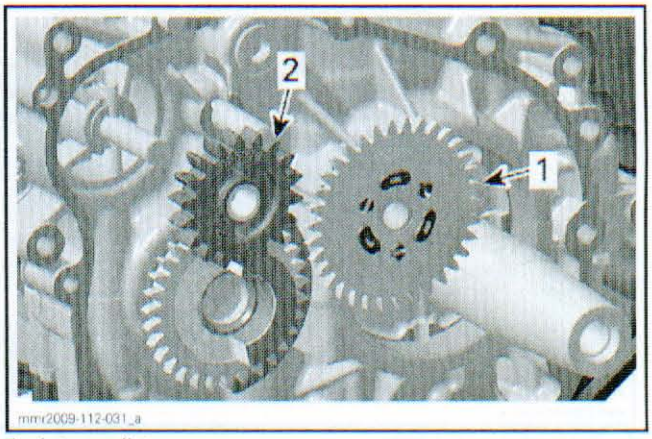

1. *Intermediate gear*
2. *Water pump gear*

NOTE: Water pump drive gear can not be removed from balancer shaft.

Water Pump Drive Gear Inspection

Inspect gears for wear or other damage.

Replace gear(s) if necessary.

Water Pump Drive Gear Installation

The installation is the reverse of the removal procedure.

FRONT RADIATOR

Front Radiator Cleaning and Inspection

Remove all debris between radiator fins. A clean radiator is more efficient than a dirty one.

Check if the radiator fins are damaged. Replace the front radiator if necessary.

NOTE: A radiator with many broken fins does not work properly.

Front Radiator Removal

1. Remove the engine from the vehicle. Refer to *ENGINE REMOVAL AND INSTALLATION* subsection.
2. Lift and secure rear of vehicle.
3. Remove both hoses from radiator tubes.

www.midwestmanuals.com

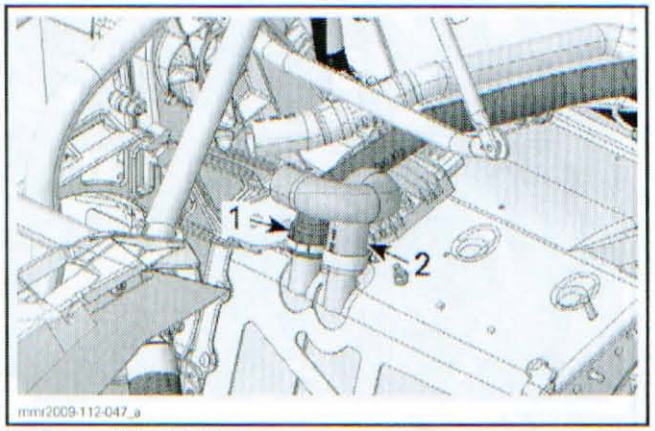

1. *Rear radiator inlet hose*
2. *Engine outlet hose*

4. From engine compartment, grind the 3 rivets retaining the radiator protector.

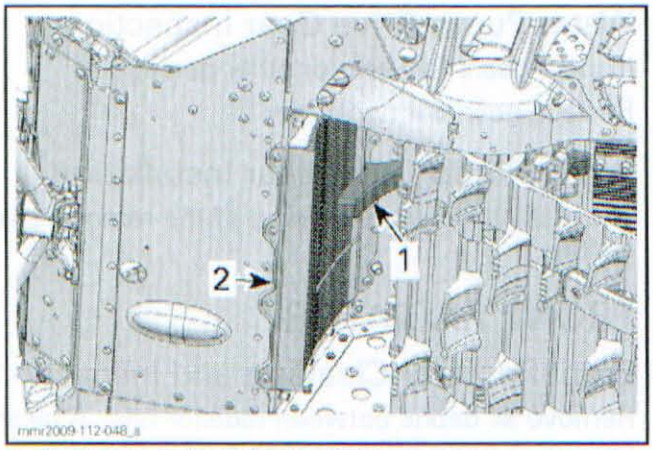

1. *Radiator protector (in front of track)*
2. *Front radiator*

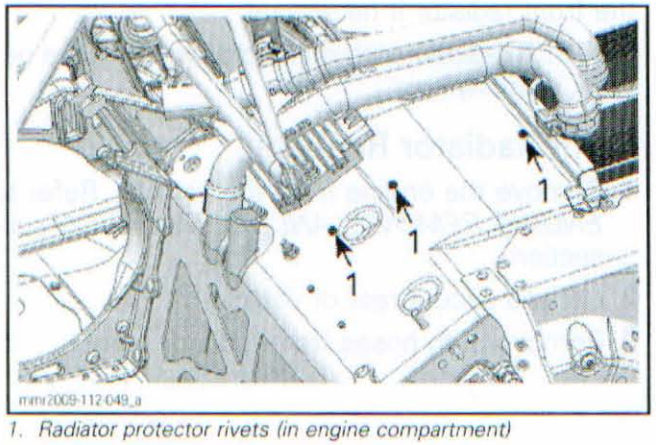

1. *Radiator protector rivets (in engine compartment)*

5. Remove the upper rivets retaining the front radiator to the frame.

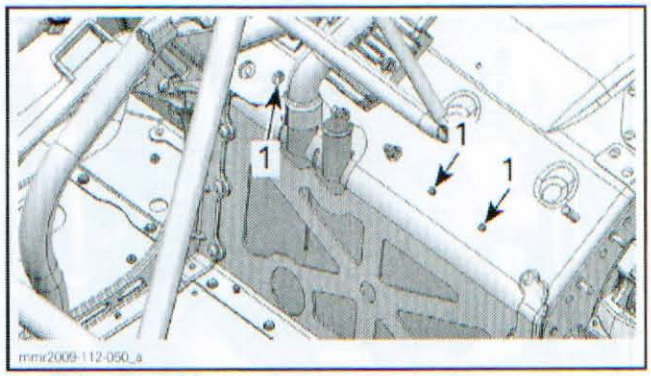

1. *Upper rivets of front radiator*

6. From underneath frame, drill the lower rivets of front radiator or grind them with a grinding disk.

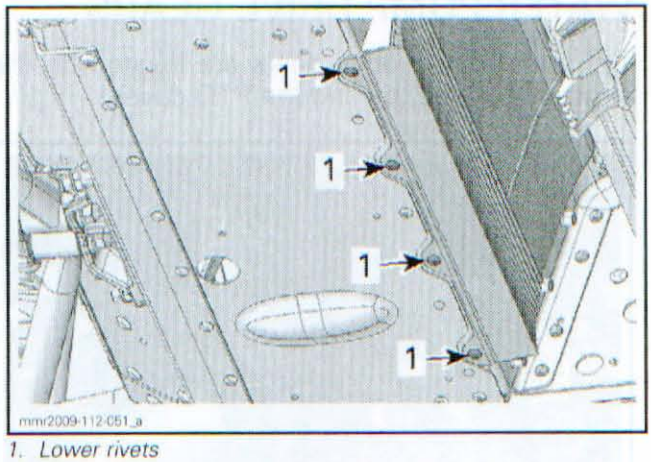

1. *Lower rivets*

7. Remove nuts securing the front radiator to frame.

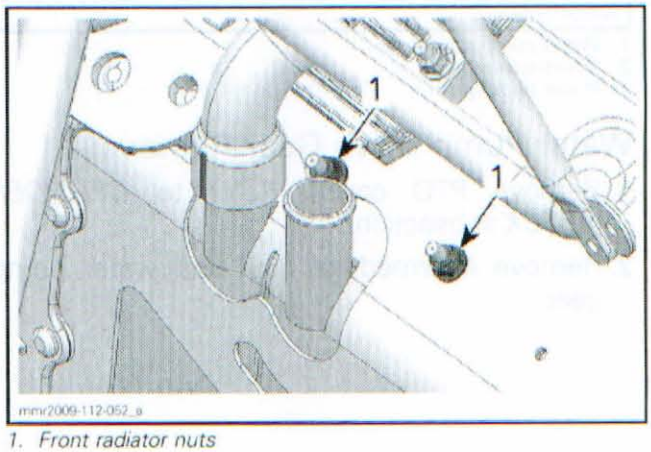

1. *Front radiator nuts*

8. Remove front radiator from vehicle.

Front Radiator Installation

For installation, reverse the removal procedure. However, pay attention to the following.

1. Lift and secure rear of vehicle.
2. Install the front radiator in frame.

www.midwestmanuals.com

3. Install nuts to secure radiator. Do not torque yet.
4. Install all rivets.
5. Tighten nuts to 5 N•m (44 lbf•**in**).
6. Install the radiator protector. To avoid removing the track, proceed as follow:
   6.1 Using LOCTITE 380 (BLACK MAX) (P/N 413 408 300), glue 3 washers (P/N 517 124 300) in protector bores.

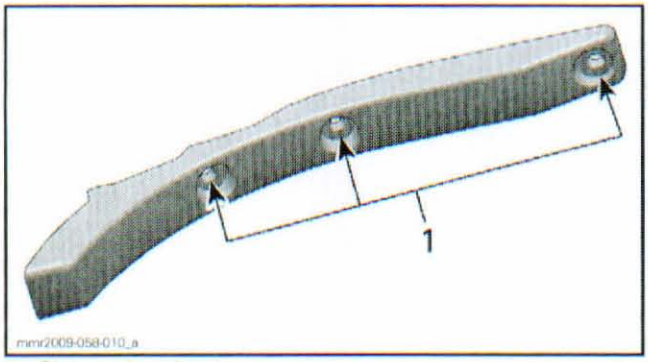

1. Glue washers here

   6.2 From underneath frame, position protector.

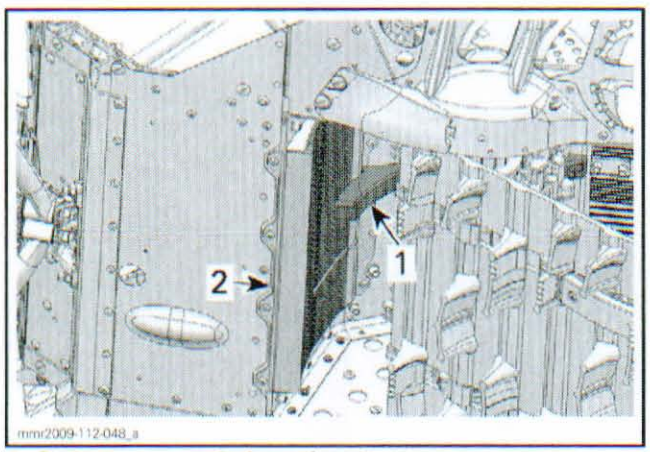

1. Radiator protector (in front of track)
2. Front radiator

   6.3 From engine compartment, secure protector with the rivets. Ensure to insert the rivet ends in washers.
7. Reinstall remaining removed parts.
8. Refill cooling system as described in this subsection.

REAR RADIATOR

Rear Radiator Cleaning and Inspection

Remove all debris between radiator fins. A clean radiator is more efficient than a dirty one.

Check if the radiator fins are damaged. Replace the rear radiator if necessary.

NOTE: A radiator with many broken fins does not work properly.

Rear Radiator Removal

1. Drain cooling system, see *COOLING SYSTEM DRAINING* in this subsection.
2. Remove rear suspension. Refer to the *REAR SUSPENSION* subsection.
3. Remove fuel tank. Refer to *FUEL TANK AND FUEL PUMP* subsection.
4. Remove luggage rack as necessary according to vehicle.
5. Remove snow guard.
6. Remove rear bumper
7. Remove polystyrene board and tape securing the wiring harness in the middle of rear radiator and move harness aside.
8. Using a grinding disk, grind all rivet rows retaining rear radiator to frame. Work from top of frame.

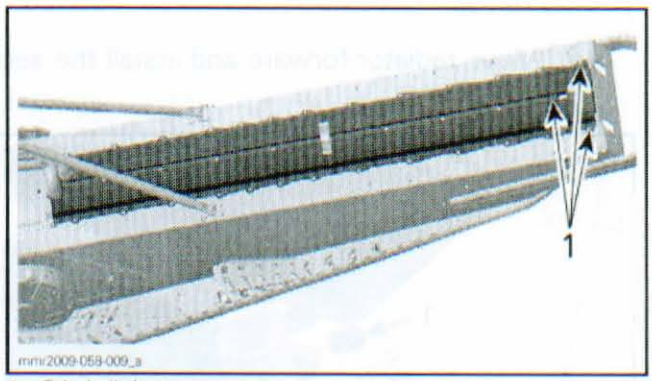

1. Grind all rivet rows

NOTE: When pushing the grinded rivets out, support the frame around the rivet with a socket on the opposite side to avoid warpage.

9. Unplug coolant hoses from rear radiator then remove radiator from vehicle.

Rear Radiator Installation

The installation is the reverse of the removal procedure. However, pay attention to the following.

1. Slide radiator into frame.
2. Near radiator tube, replace both HUCK rivets by the following parts.

www.midwestmanuals.com

NEW FASTENERS	
TORX screw M6 x 25 (2x)	(P/N 250 000 284)
Hexagonal flanged elastic stop nut M6 (2x)	(P/N 233 261 414)

3. Install both reinforcement plates using new fasteners.

   3.1 First install the rear screw. Place it head on the top. Do not torque yet.

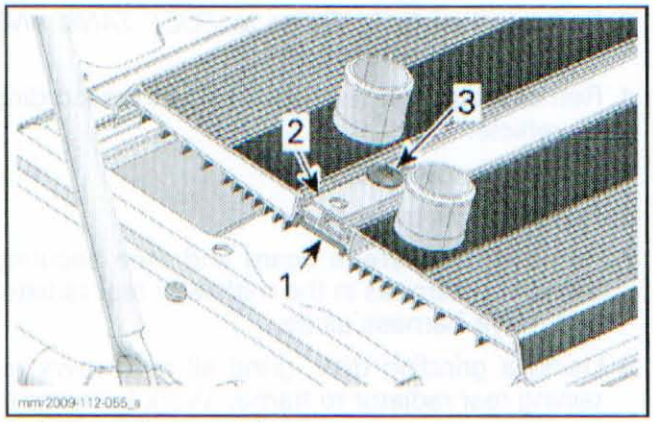

1. Lower reinforcement plate
2. Upper reinforcement plate
3. Screw M6 x 25

   3.2 Move radiator forward and install the second screw.

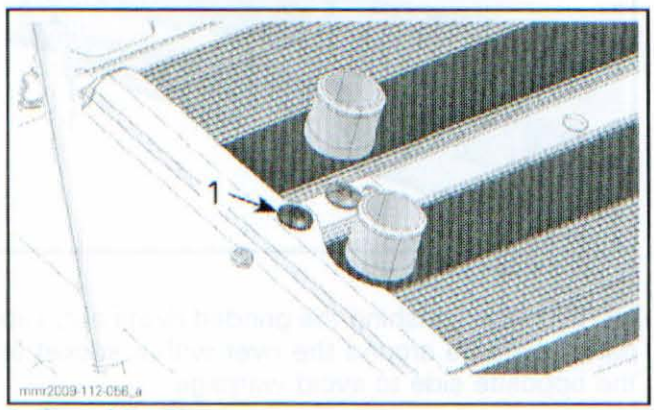

1. Screw M6 x 25

   3.3 Tighten bolts to 10 N•m (89 lbf•**in**).

4. Secure radiator to frame using new rivets (head on top).
5. If traction enhancing products (studs) are used on vehicle, install the appropriate radiator protector. Refer to *TRACK* to choose the proper protectors kit.
6. Refill cooling system as described in this subsection.
7. Install all removed parts.

www.midwestmanuals.com

MAGNETO AND STARTER

SERVICE TOOLS

Description	Part Number	Page
CENTER BOLT	529 036 154	86
CRANKSHAFT PROTECTOR (MAG SIDE)	529 036 160	89
FLUKE 115 DIGITAL MULTIMETER	529 035 868	87, 93
MAGNETO PULLER	529 035 748	89
T-HARNESS	529 035 869	93

SERVICE PRODUCTS

Description	Part Number	Page
KLÜEBER PASTE 46 MR 401	420 297 616	86
LOCTITE 243 (BLUE)	293 800 060	88, 90–91
LOCTITE 767 (ANTISEIZE LUBRICANT)	293 800 070	92, 94
LOCTITE CHISEL (GASKET REMOVER)	413 708 500	86
PULLEY FLANGE CLEANER	413 711 809	90
SUPER LUBE GREASE	293 550 030	94

www.midwestmanuals.com

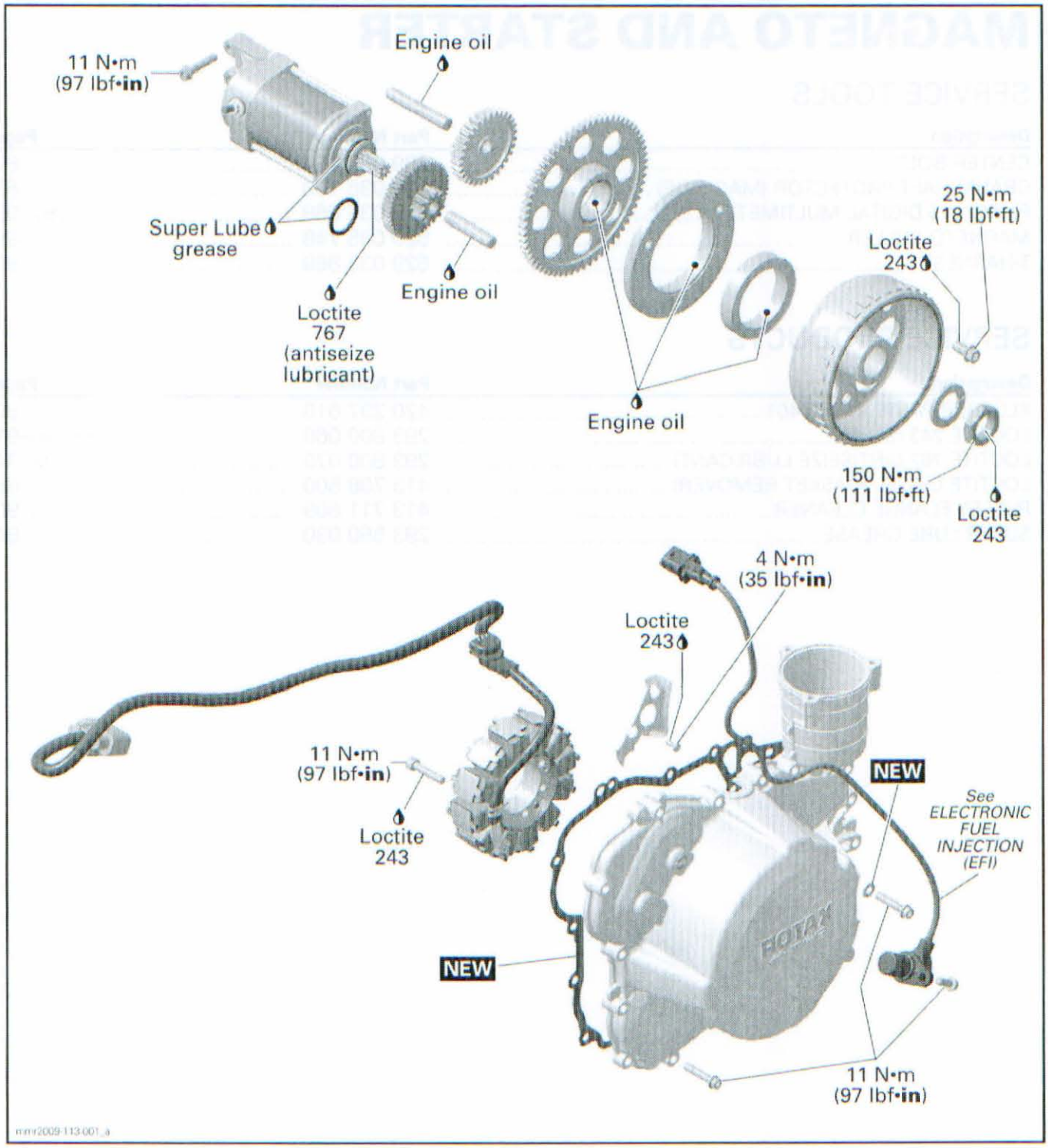

www.midwestmanuals.com

GENERAL

⚠ WARNING

Always disconnect BLACK (-) cable first and reconnect last.

The engine removal is necessary to work on the magneto system.

During assembly/installation, use the torque values and service products as in the exploded view.

Clean threads before applying a threadlocker. Refer to *SELF-LOCKING FASTENERS* and *LOCTITE APPLICATION* at the beginning of this manual for complete procedure.

⚠ WARNING

Torque wrench tightening specifications must strictly be adhered to.
Locking devices (ex: locking tabs, elastic stop nuts, self-locking fasteners, cotter pin, etc.) must be replaced with new ones.

Hoses, cables or locking ties removed during a procedure must be reinstalled as per factory standards.

PROCEDURES

MAGNETO COVER

Magneto Cover Removal

1. Remove engine from vehicle. Refer to *ENGINE REMOVAL AND INSTALLATION* subsection.
2. Drain engine oil. Refer to *LUBRICATION SYSTEM* subsection.
3. Cut locking tie and disconnect crankshaft position sensor (CPS) connector.

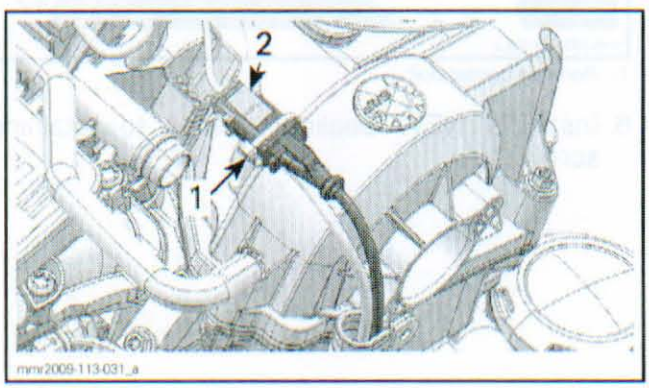

1. Locking tie
2. CPS sensor connector

4. Remove retaining screw and cable clamp.

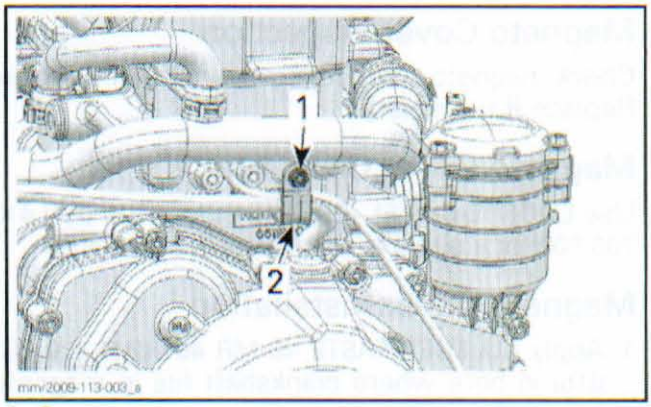

1. Remove screw
2. Cable clamp

5. Remove CPS sensor wire from both cable clamps.

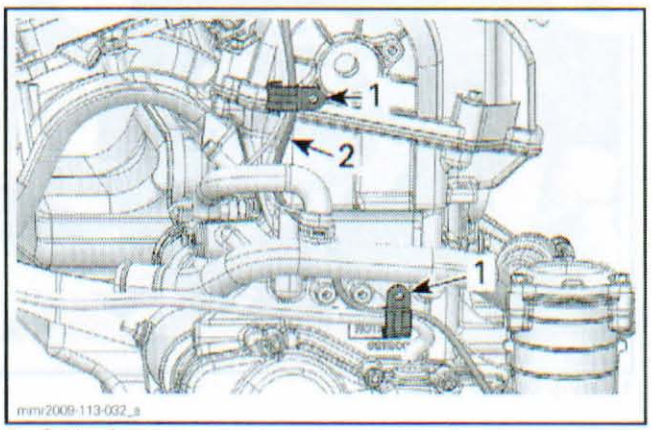

1. Cable clamps
2. CPS sensor wire

6. Place an oil pan under magneto area to catch remaining oil.
7. Remove magneto cover retaining screws and discard sealing washer.

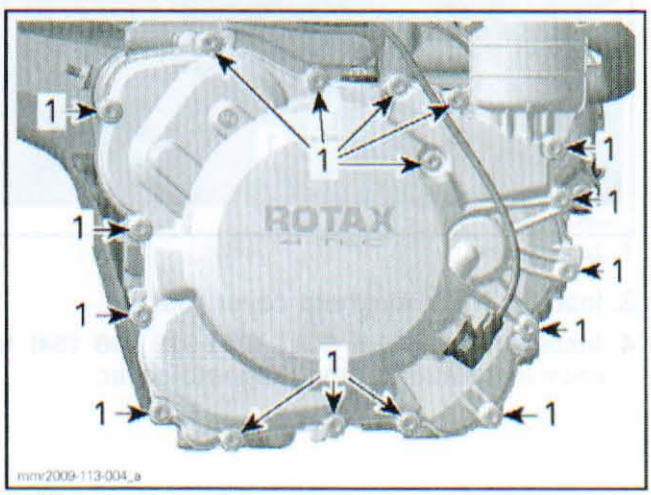

1. Magneto cover screws

8. Pull off magneto cover.
9. Discard magneto cover gasket.

www.midwestmanuals.com

Magneto Cover Inspection

Check magneto cover for cracks or other damage. Replace if necessary.

Magneto Cover Cleaning

Use LOCTITE CHISEL (GASKET REMOVER) (P/N 413 708 500) or a suitable equivalent for cleaning.

Magneto Cover Installation

1. Apply KLÜEBER PASTE 46 MR 401 (P/N 420 297 616) in bore where crankshaft fits in magneto cover.

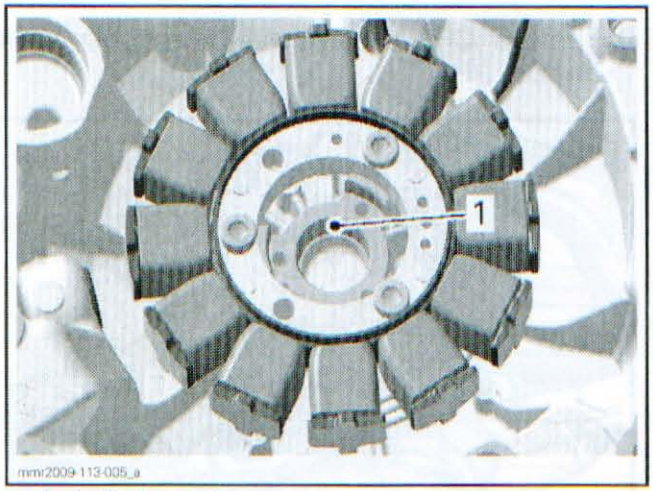

1. Apply Klueber paste

2. Ensure location pins for starter drive gears are in place.

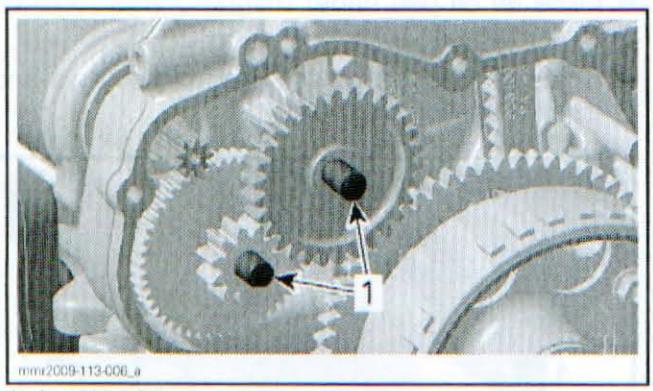

1. Location pins

3. Install a **NEW** magneto cover gasket.
4. Install the CENTER BOLT (P/N 529 036 154) to ease installation of the magneto cover.

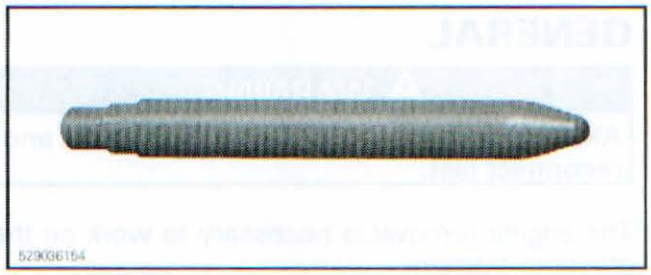

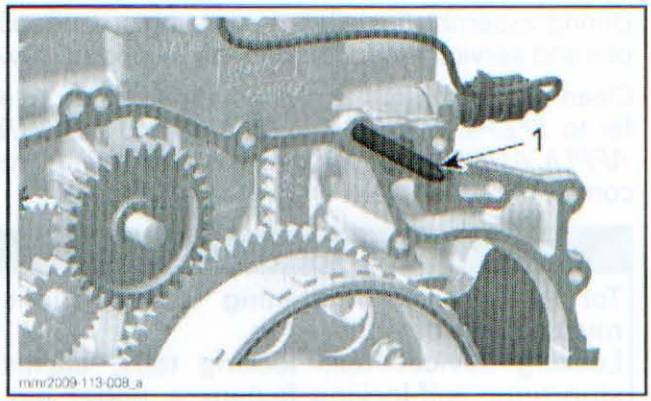

1. Center bolt

5. Carefully install magneto cover, then remove center bolt.

⚠ CAUTION Magneto force between magneto flywheel and stator is very high. Avoid contusion of your fingers

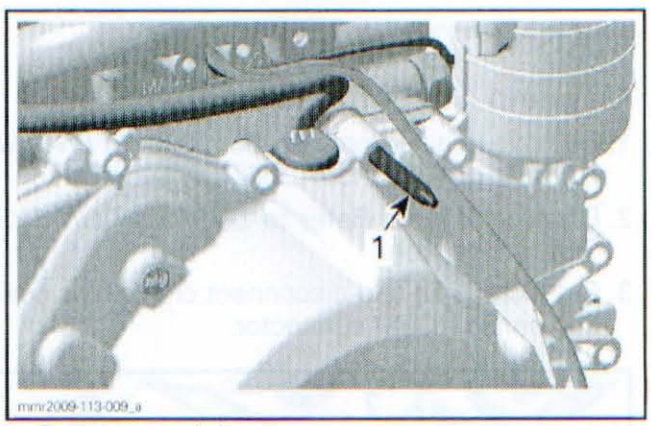

1. Remove center bolt

6. Install a **NEW** sealing washer to retaining screw.

www.midwestmanuals.com

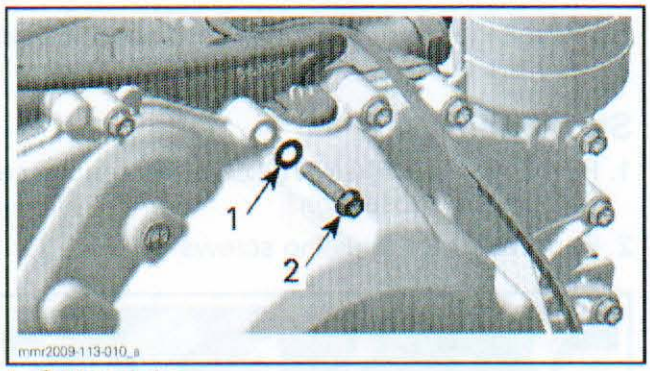

1. *Sealing washer*
2. *Retaining screw*

7. Tighten magneto cover screws as per the following sequence.

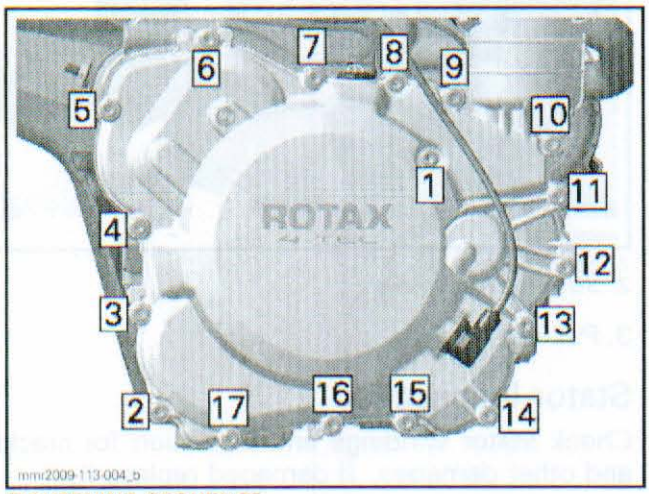

TIGHTENING SEQUENCE

STATOR

Stator Continuity Test

1. Disconnect battery.
2. Move fuel tank back. Refer to *FUEL TANK AND FUEL PUMP* subsection.
3. Disconnect the magneto connector from voltage regulator.

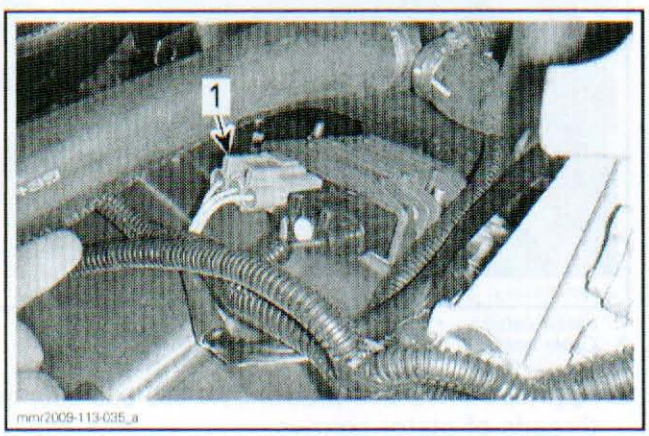

1. *Magneto connector*

4. Set the FLUKE 115 DIGITAL MULTIMETER (P/N 529 035 868) to Ω.

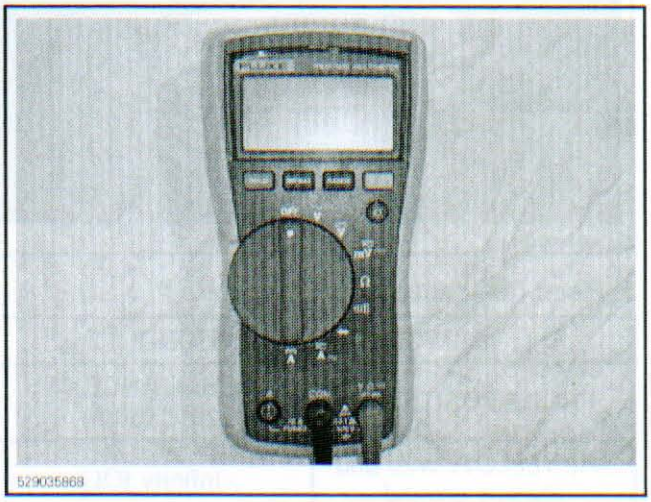

5. Connect multimeter probes between each pair of YELLOW wires.

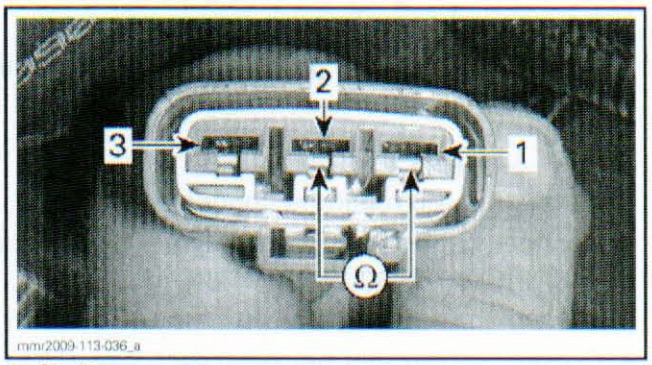

1. *Pin #1*
2. *Pin #2*
3. *Pin #3*

6. Read resistance as per following table.

STATOR CONTINUITY TEST	
YELLOW WIRES (EACH PAIR)	RESISTANCE @ 20°C (68°F)
Pins 1 and 2	0.1 - 1 Ω
Pins 1 and 3	
Pins 2 and 3	

If any resistance reading is not as specified, the stator or the wiring (including connector) is shorted to ground and needs to be repaired or replaced.

If resistance is good, perform the stator insulation test.

Stator Insulation Test

1. Connect multimeter between any YELLOW wire and chassis ground.

www.midwestmanuals.com

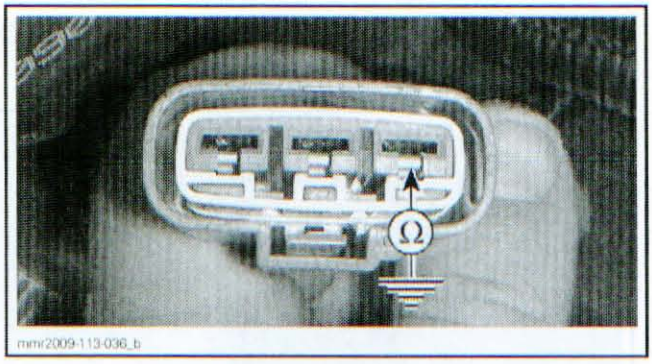

mmr2009-113-036_b

2. Read resistance.

STATOR INSULATION TEST	
PROBE POSITIONS	RESISTANCE @ 20°C (68°F)
Any YELLOW wire and chassis ground	Infinity (OL)

If any resistance reading is not as specified, the stator or the wiring is shorted to ground and needs to be repaired or replaced.

If the insulation test is good, perform the output voltage test.

Stator Output Voltage Test

1. Reconnect the magneto connector.
2. Connect battery and start engine. Let engine reach its operating temperature.
3. Set multimeter to Vac scale.
4. Connect multimeter between each pair of YELLOW wires.

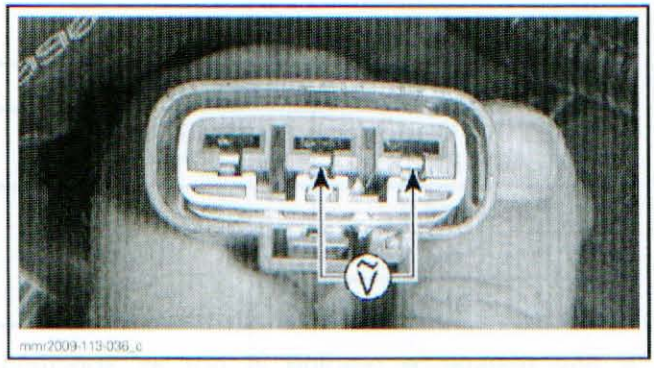

mmr2009-113-036_c

5. Read voltage.

STATOR OUTPUT VOLTAGE TEST		
TEST ENGINE SPEED	TERMINAL	VOLTAGE
Idle speed	1 and 2	± 25 Vac
	1 and 3	
	2 and 3	

If any voltage reading is lower than specification, replace the stator.

Stator Removal

1. Remove the *MAGNETO COVER*, see procedure in this subsection.
2. Remove stator retaining screws.

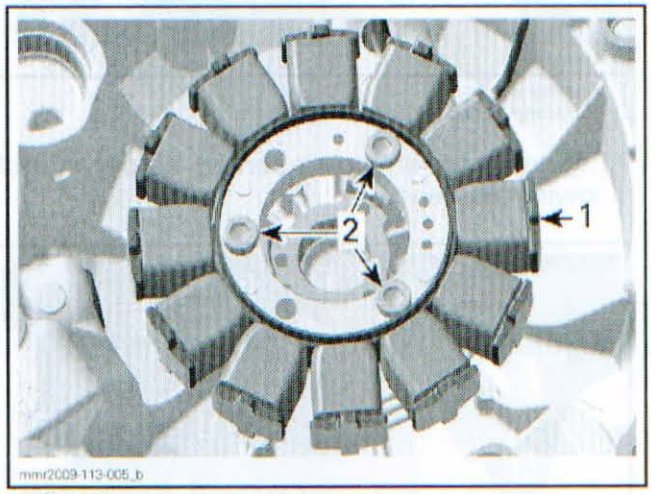

mmr2009-113-005_b

1. *Stator*
2. *Stator retaining screws*

3. Pull out stator.

Stator Inspection

Check stator windings and insulation for cracks and other damages. If damaged replace it.

Check if stator wires are brittle, hard or otherwise damaged.

Stator Installation

1. Ensure that the stator cable is underneath the cable holder during installing of the stator.

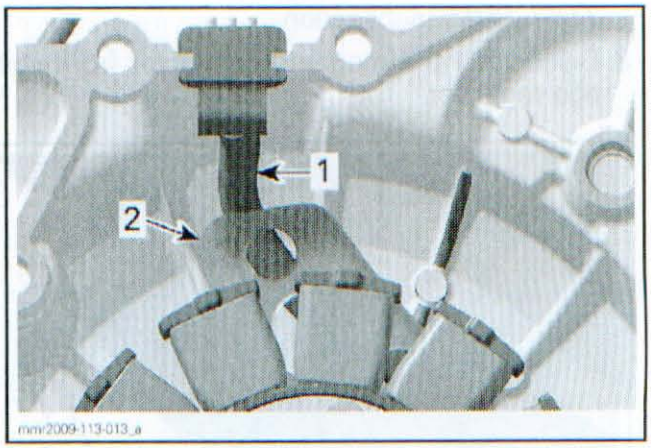

mmr2009-113-013_a

1. *Stator cable*
2. *Cable holder*

2. Apply LOCTITE 243 (BLUE) (P/N 293 800 060) on threads of stator screws.

www.midwestmanuals.com

3. Install screws and tighten them to 11 N•m (97 lbf•**in**).
4. Reinstall *MAGNETO COVER*, see procedure in this subsection.

ROTOR

Rotor Removal

1. Remove the *MAGNETO COVER*, see procedure in this subsection.
2. Lock crankshaft. Refer to *CYLINDER BLOCK* subsection.
3. Remove rotor retaining nut and lock washer.

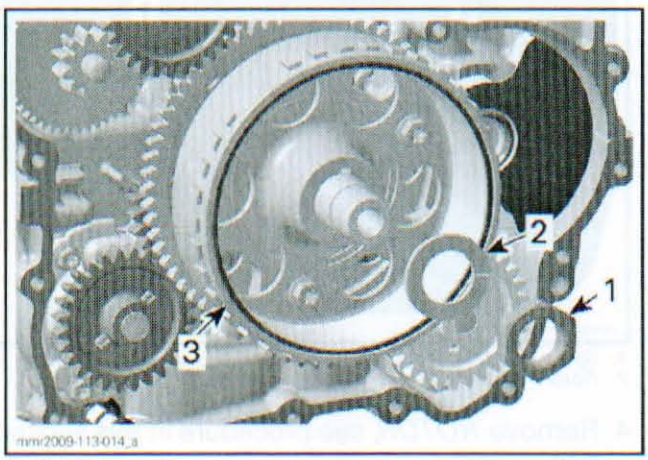

1. *Retaining nut*
2. *Lock washer*
3. *Rotor*

4. Install the MAGNETO PULLER (P/N 529 035 748) and the CRANKSHAFT PROTECTOR (MAG SIDE) (P/N 529 036 160) then remove rotor.

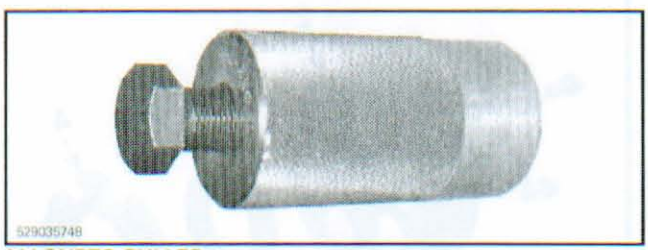

MAGNETO PULLER

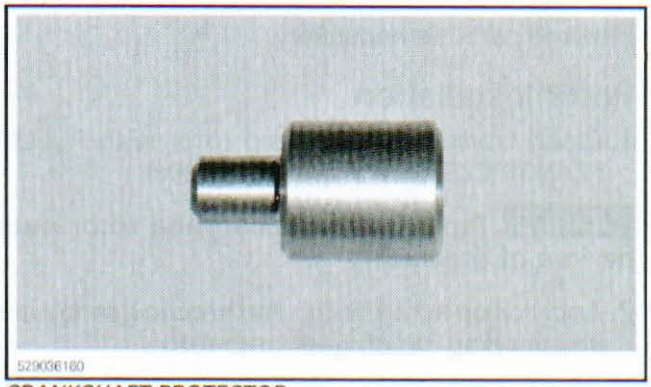

CRANKSHAFT PROTECTOR

NOTE: Use grease to fit protector on crankshaft end prior to screw in the magneto puller.

5. Screw in magneto puller bolt to remove rotor.

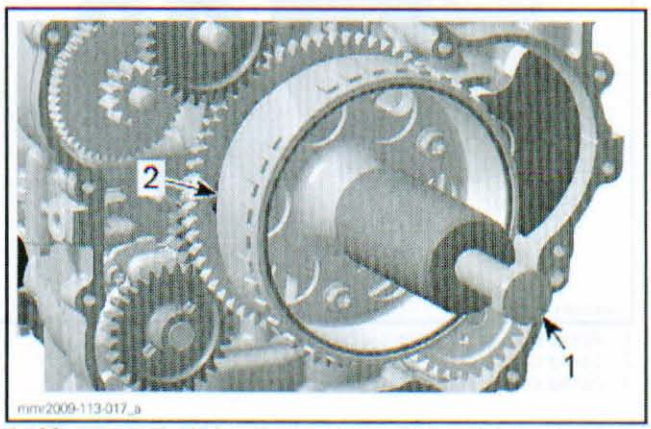

1. *Magneto puller bolt*
2. *Rotor*

Rotor Inspection

Check inner side of rotor for scratches or other damage.

Check woodruff key and keyway for wear or damages.

Check trigger wheel teeth for wear or other damages.

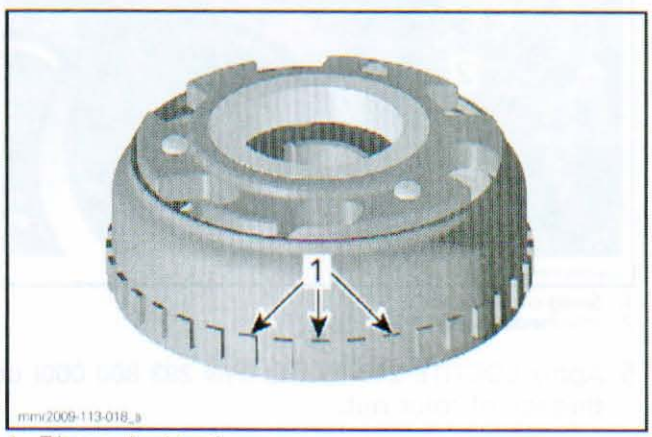

1. *Trigger wheel teeth*

www.midwestmanuals.com

Replace parts as necessary.

Rotor Installation

1. Clean crankshaft taper and rotor with PULLEY FLANGE CLEANER (P/N 413 711 809).

NOTICE **Taper on crankshaft and rotor must be free of grease.**

2. Apply oil on sprag clutch and needle bearing and install sprag clutch gear onto rotor.

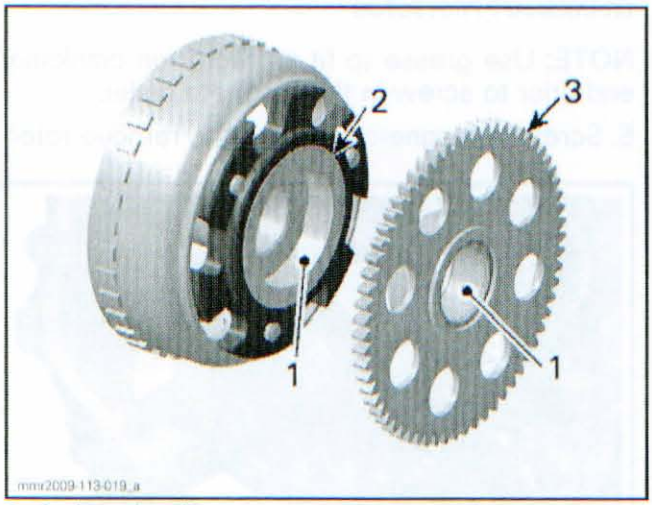

1. *Apply engine oil here*
2. *Sprag clutch*
3. *Sprag clutch gear*

3. Slide rotor onto crankshaft. The woodruff key and groove must be aligned.
4. Rotate sprag clutch gear counterclockwise to align intermediate gear teeth with sprag clutch gear.

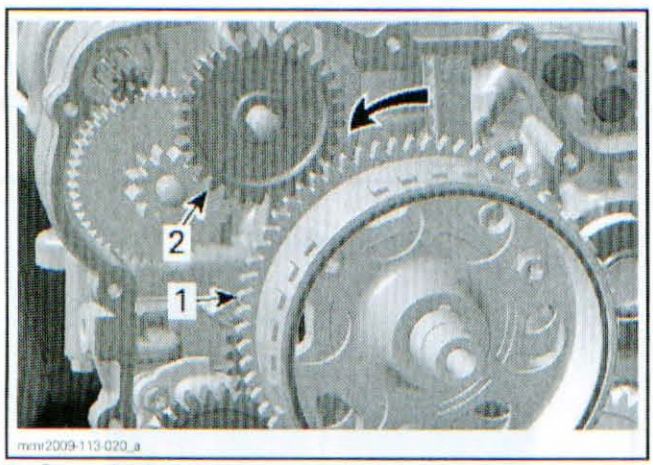

1. *Sprag clutch gear*
2. *Intermediate gear*

5. Apply LOCTITE 243 (BLUE) (P/N 293 800 060) on threads of rotor nut.
6. Install washer and nut.
7. Tighten nut to 150 N•m (111 lbf•ft).

SPRAG CLUTCH

Sprag Clutch Removal

1. Remove the *MAGNETO COVER*, see procedure in this subsection.
2. Lock crankshaft. Refer to *CYLINDER BLOCK* subsection.
3. Loosen and remove sprag clutch housing screws.

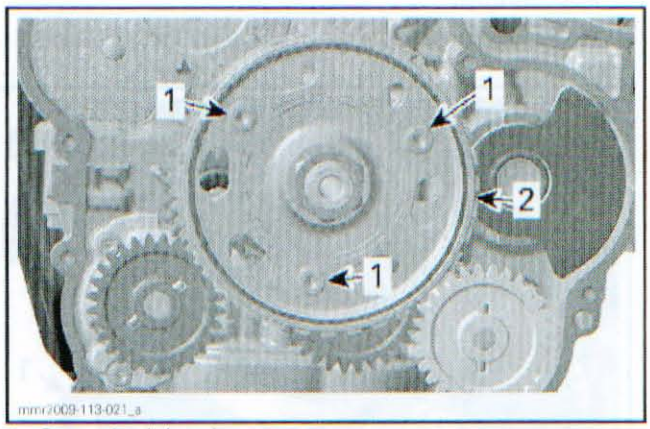

1. *Sprag clutch housing screws*
2. *Rotor*

4. Remove *ROTOR*, see procedure in this subsection.
5. Remove sprag clutch housing.
6. Remove sprag clutch from sprag clutch housing.

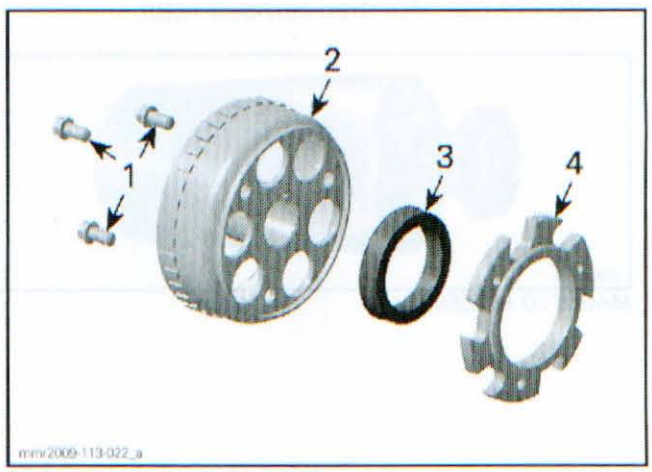

1. *Sprag clutch housing screws*
2. *Rotor*
3. *Sprag clutch*
4. *Sprag clutch housing*

Sprag Clutch Inspection

Inspect sprag clutch and sprag clutch housing for wear and damage.

www.midwestmanuals.com

Check the collar of the sprag clutch gear, refer to *SPRAG CLUTCH GEAR*.

Rotate sprag clutch gear clockwise. Gear must rotate freely.

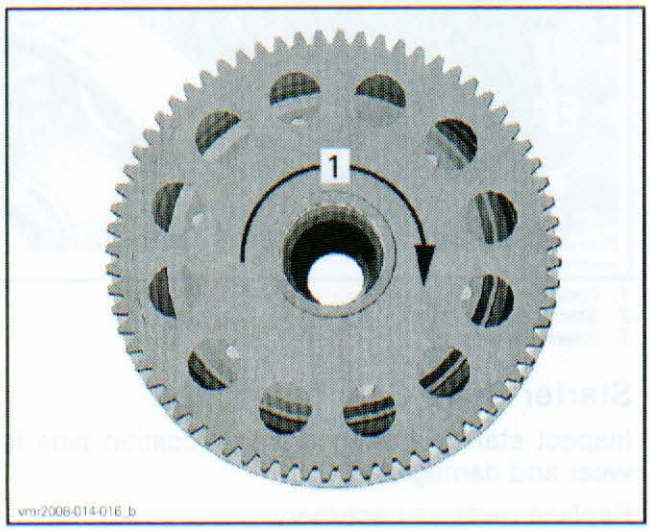

1. Free

Rotate sprag clutch gear counterclockwise. Gear must lock.

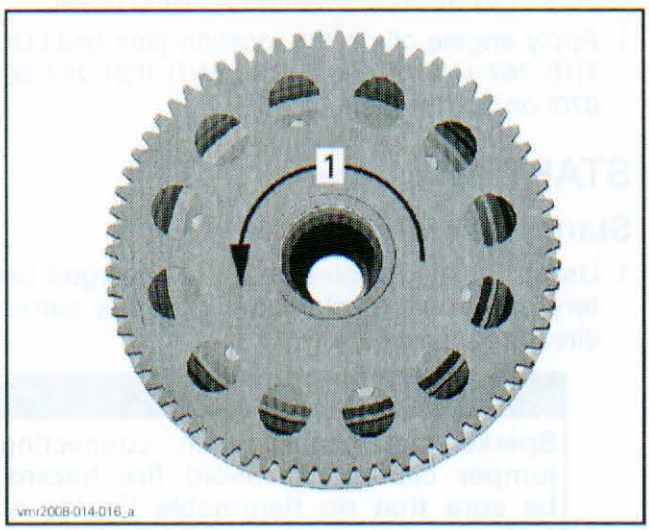

1. Lock

Sprag Clutch Installation

1. Apply LOCTITE 243 (BLUE) (P/N 293 800 060) on threads of sprag clutch housing screws.
2. Loosely install screws.
3. Apply engine oil on sprag clutch and sprag clutch gear needle bearing.

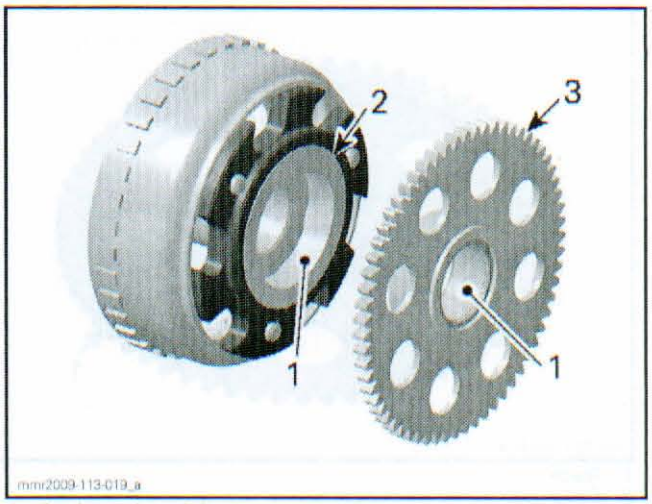

1. Apply engine oil here
2. Sprag clutch
3. Sprag clutch gear

4. Install *ROTOR*, see procedure in this subsection.
5. Tighten sprag clutch housing screws to 25 N•m (18 lbf•ft).
6. Install all other removed parts.

SPRAG CLUTCH GEAR

Sprag Clutch Gear Removal

1. Remove rotor and sprag clutch gear together. Refer to *ROTOR* in this subsection.
2. Pull sprag clutch gear from the rotor.

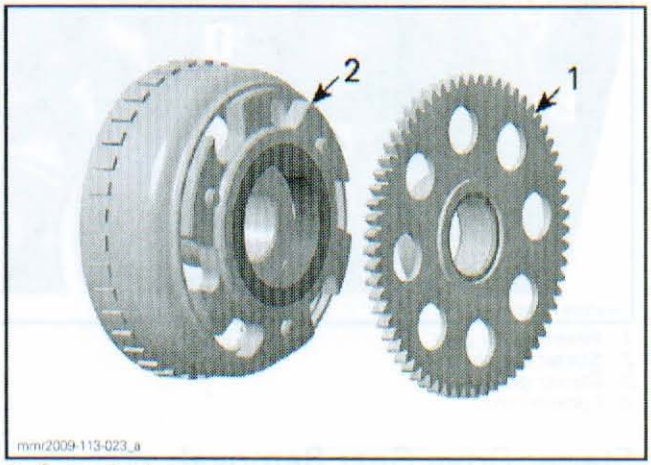

1. Sprag clutch gear
2. Rotor

Sprag Clutch Gear Inspection

Inspect gear, especially teeth and sprag clutch collar for wear and other damage.

Check needle bearing for wear and pittings.

www.midwestmanuals.com

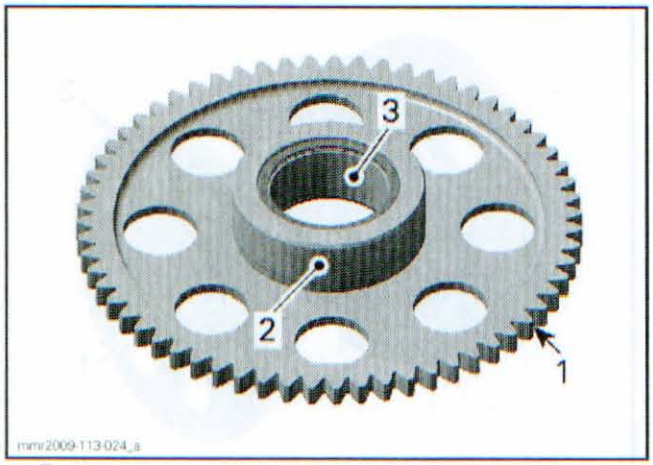

1. *Teeth*
2. *Collar*
3. *Needle bearing*

Replace sprag clutch gear if necessary.

Sprag Clutch Gear Installation

The installation is the reverse of the removal procedure. Pay attention to the following detail.

NOTE: Apply engine oil on needle bearing and collar of sprag clutch gear.

STARTER DRIVE GEARS

The starter drive gears are located on the engine MAG side behind the magneto cover.

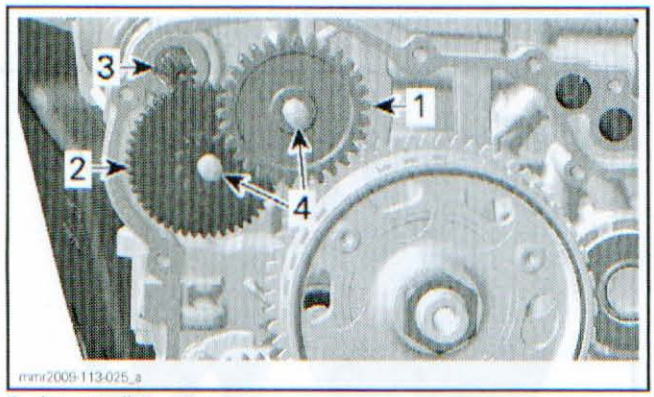

1. *Intermediate gear*
2. *Starter double gear*
3. *Starter gear*
4. *Location pins*

Starter Drive Gear Removal

1. Remove *MAGNETO COVER*, see procedure in this subsection.
2. Remove location pins, starter double gear and intermediate gear.

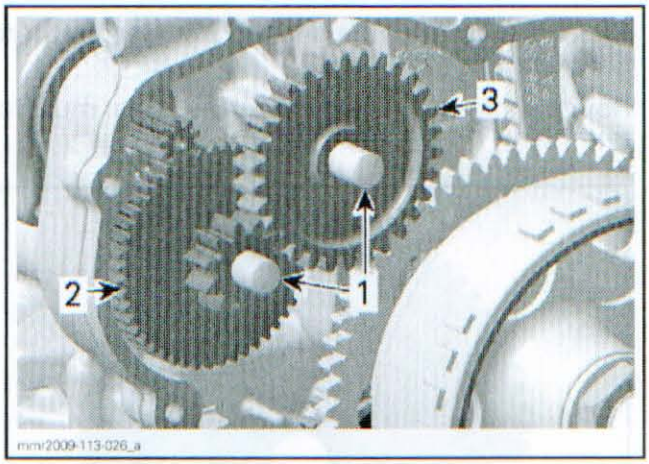

1. *Location pins*
2. *Starter double gear*
3. *Intermediate gear*

Starter Drive Gear Inspection

Inspect starter drive gears and location pins for wear and damage.

Replace parts as necessary.

Starter Drive Gear Installation

The installation is the reverse of the removal procedure. Pay attention to the following detail.

1. Apply engine oil on the location pins and LOCTITE 767 (ANTISEIZE LUBRICANT) (P/N 293 800 070) on starter gear.

STARTER

Starter Operation Test

1. Using boosting cables and a full charged battery or a power pack, carefully supply current directly to the starter.

⚠ WARNING

Sparks can occur when connecting jumper cables. To avoid fire hazard, be sure that no flammable liquids or fuel vapors are in the test area.

1.1 To prevent engine running, remove injector fuses (F3, F4 and F5 in fuse holder).

1.2 Disconnect ground cable from the battery.

1.3 Disconnect starter cable from starting solenoid.

1.4 Connect the BLACK (-) cable first.

1.5 Then connect the remaining jump cable to the starter cable.

www.midwestmanuals.com

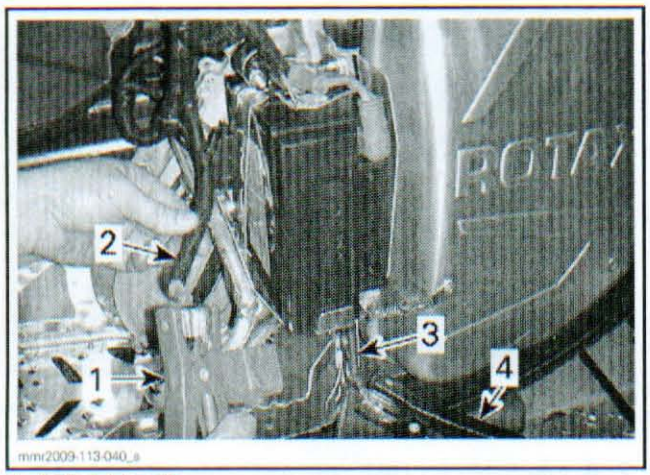

mmr2009-113-040_a

1. *RED (+) handle*
2. *Starter cable*
3. *Ground cable*
4. *BLACK (-) handle*

If starter now turns ensure the cable and connections from battery to starter solenoid are in good condition.

- If they test good, the starter solenoid can be suspected. Refer to *STARTING SYSTEM* subsection.
- If starter solenoid test good, perform the *STARTER VOLTAGE DROP TEST (AT BATTERY)*. A problem with the starter armature is possible.

If starter does not turn, check the starter cable and connections.

- If good, check for mechanical problems in the starter.

Starter Voltage Drop Test (At Battery)

NOTE: This test will confirm if starter draws too much current. Battery must be fully charged and in good condition.

1. To prevent engine running, remove injector fuses (F3, F4 and F5 in fuse holder).
2. Connect the T-HARNESS (P/N 529 035 869) to diagnostic connector.

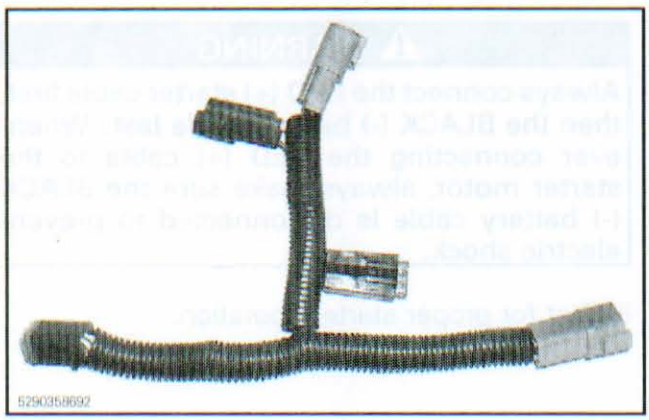

5290358692

3. Install probes of the FLUKE 115 DIGITAL MULTIMETER (P/N 529 035 868) on battery posts.



529035868

4. Crank engine by installing a fused jumper wire between the negative post of battery and the ORANGE/BLACK wire on starter solenoid.



mmr2009-113-041_a

1. *Fused jumper wire*

5. Check battery voltage as the starter is cranking.

NOTE: Battery voltage will drop approximately 2 Vdc and fluctuate with starter cranking load.

If the result is close to battery voltage, the starter is in good condition.

If the result is below battery voltage (- 2 Vdc and more), the starter may be defective.

Starter Removal

1. Remove fuel tank. Refer to *FUEL TANK AND FUEL PUMP* subsection.
2. Disconnect battery cables. Refer to *CHARGING SYSTEM* subsection.
3. Remove driven pulley. Refer to *DRIVEN PULLEY AND COUNTERSHAFT* subsection.

www.midwestmanuals.com

4. Remove the thermostat. Refer to *COOLING SYSTEM* subsection.
5. Remove retaining screw from intake manifold support.

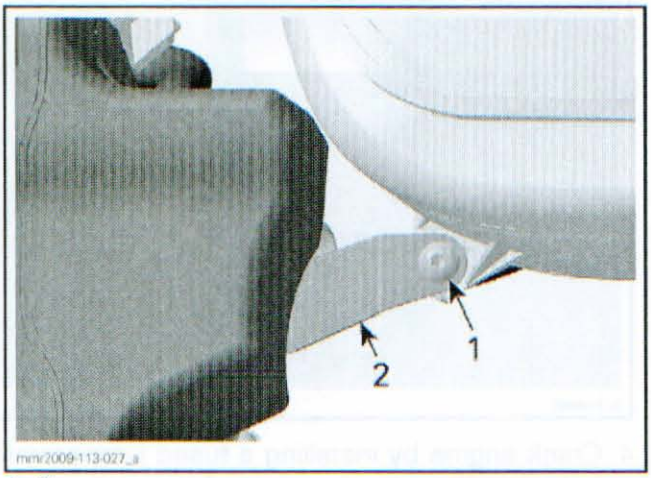

1. *Remove screw*
2. *Intake manifold support*

6. Remove the starter cable from starter.
7. Remove starter retaining screws and intake manifold support.

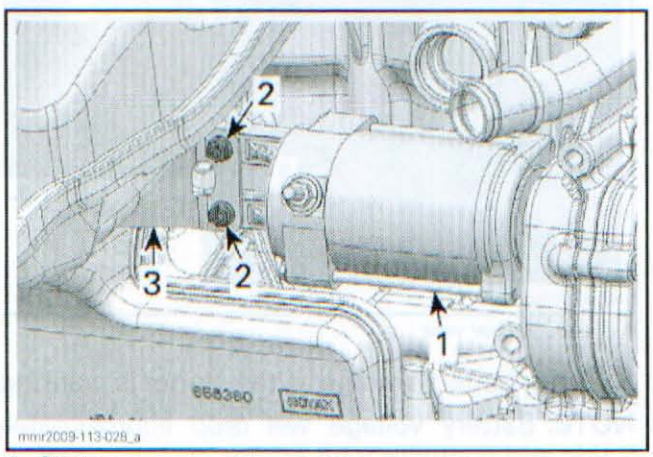

1. *Starter*
2. *Starter retaining screws*
3. *Intake manifold support*

8. Pull electric starter out from cylinder block.
9. Remove starter from vehicle.

Starter Installation

1. Ensure starter and engine mating surfaces are free of debris.

NOTICE **Serious problems may arise if the starter is not properly aligned.**

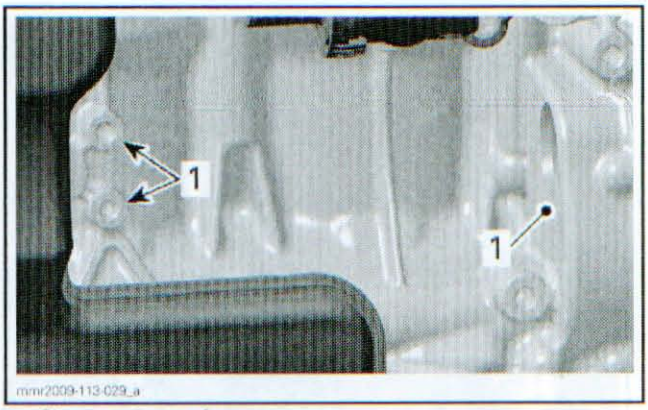

1. *Clean mating surfaces*

2. Apply SUPER LUBE GREASE (P/N 293 550 030) on the starter O-ring and LOCTITE 767 (ANTISEIZE LUBRICANT) (P/N 293 800 070) on starter gear before installation.

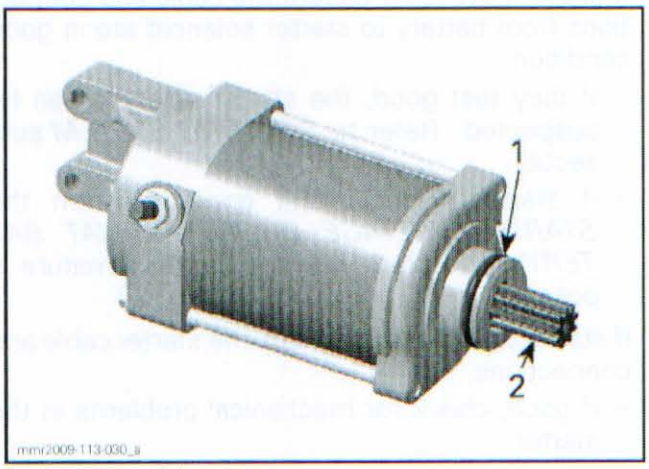

1. *Apply super lube grease*
2. *Apply antiseize lubricant*

3. Install starter screws with the air intake manifold support.
4. Tighten screws to 11 N•m (97 lbf•**in**).
5. Connect the starter cable to the starter and torque nut to 7 N•m (62 lbf•**in**).
6. Install all other removed parts.
7. Reconnect battery cables.

⚠ WARNING

Always connect the RED (+) starter cable first, then the BLACK (-) battery cable last. Whenever connecting the RED (+) cable to the starter motor, always make sure the BLACK (-) battery cable is disconnected to prevent electric shock.

8. Test for proper starter operation.

www.midwestmanuals.com

TIMING CHAIN

SERVICE TOOLS

Description	Part Number	Page
CAMSHAFT LOCKING TOOL	529 036 149	98

SERVICE PRODUCTS

Description	Part Number	Page
LOCTITE 243 (BLUE)	293 800 060	99, 101

www.midwestmanuals.com

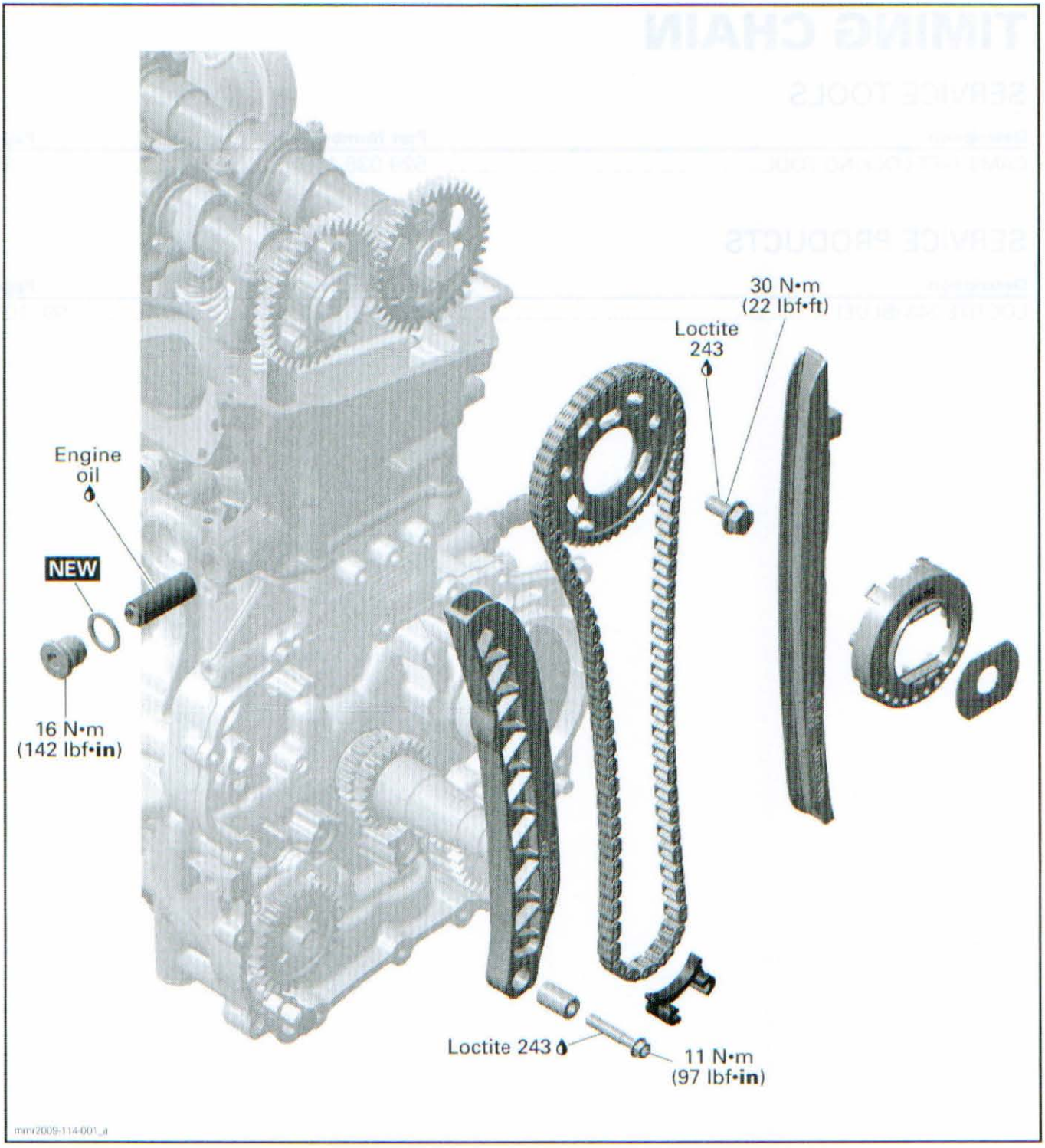

www.midwestmanuals.com

GENERAL

The engine removal is necessary to work on the following components:

- Timing chain
- Timing chain guide (tensioner side).

Always disconnect BLACK (-) cable from the battery, then RED (+) cable before working on the engine.

⚠ WARNING

Always disconnect BLACK (-) cable first and reconnect last.

During assembly/installation, use the torque values and service products as in the exploded view.

Clean threads before applying a threadlocker. Refer to *SELF-LOCKING FASTENERS* and *LOCTITE APPLICATION* at the beginning of this manual for complete procedure.

⚠ WARNING

Torque wrench tightening specifications must be strictly adhered to.
Locking devices (e.g.: locking tabs, elastic stop nuts, cotter pin, etc.) must be replaced with new ones.

Hoses, cables or locking ties removed during a procedure must be reinstalled as per factory standards.

When disassembling parts that are duplicated in the engine, (e.g.: valves, springs, etc.), it is strongly recommended to note their position and to keep the parts of the same assembly as a "group". If you find a defective component, it will be much easier to find the cause of the failure. Since parts were break-in together during the engine operation, they will keep their matched fit when parts are reassemble together within their "group".

TROUBLESHOOTING

The following is provided to help in diagnosing the probable source of troubles. It is a guideline and should not be assumed to show all causes for all problems.

Always check for fault codes. If a fault code is detected, service the fault code first.

UNUSUAL ENGINE NOISE OR VIBRATIONS

1. Faulty chain tensioner.
   - *Replace chain tensioner.*
2. Chain guide(s) worn out.
   - *Replace chain guide(s).*
3. Stretched timing chain or worn out sprockets.
   - *Replace timing chain and sprockets.*
4. Timing chain gear screws got loose.
   - *Retighten screws with recommended torque.*
5. Incorrect camshaft timing adjustment.
   - *Replace damaged components and readjust camshaft timing.*

ENGINE LACKS ACCELERATION OR POWER

1. Incorrect camshaft timing adjustment.
   - *Replace damaged components and readjust camshaft timing.*

PROCEDURES

TIMING CHAIN TENSIONER

Timing Chain Tensioner Removal

1. Lock crankshaft, refer to procedure in *CYLINDER BLOCK* subsection.
2. Remove the driven pulley. Refer to *DRIVEN PULLEY AND COUNTERSHAFT* subsection.
3. Move fuel tank back to access at the timing chain tensioner plug. Refer to *FUEL TANK AND FUEL PUMP* subsection
4. Remove plug screw and discard the sealing washer.
5. Pull out chain tensioner.

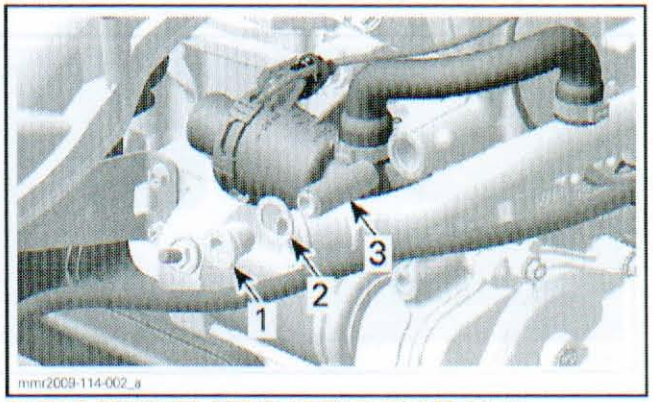

ENGINE REMOVED FOR CLARITY PURPOSE ONLY
1. *Plug screw*
2. *Sealing washer*
3. *Chain tensioner*

www.midwestmanuals.com

Timing Chain Tensioner Inspection

Check chain tensioner for free movement in bore and for scoring.

Compress chain tensioner and check if it works properly.

Timing Chain Tensioner Installation

1. Apply engine oil on chain tensioner.
2. Insert chain tensioner into housing, the plunger pointing outside of engine.



1. Chain tensioner
2. Plunger

3. Install plug screw with a **NEW** sealing washer.
4. Tighten plug screw to 16 N•m (142 lbf•**in**).
5. Install all other removed parts.

TIMING CHAIN GEAR

Timing Chain Gear Removal

1. Remove *VALVE COVER*, see procedure in *CYLINDER HEAD* subsection.
2. Lock crankshaft, refer to procedure in *CYLINDER BLOCK* subsection.
3. Lock camshaft using the CAMSHAFT LOCKING TOOL (P/N 529 036 149).

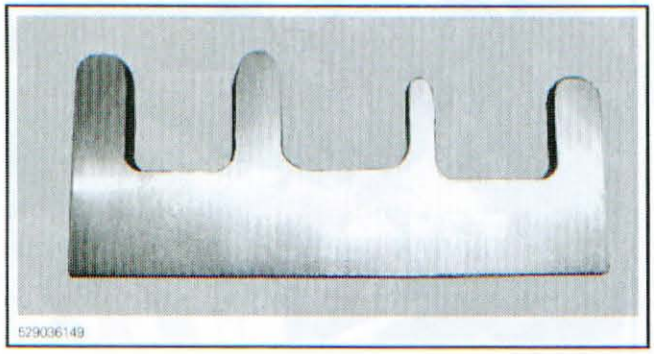

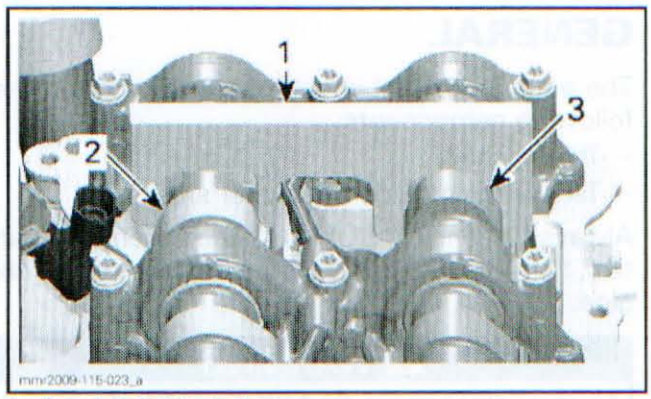

1. Camshaft locking tool
2. Intake camshaft
3. Exhaust camshaft

4. Remove thrust washer and breather cover.

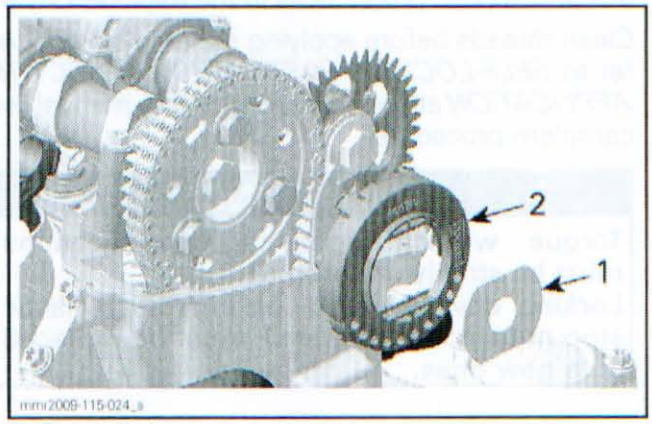

1. Thrust washer
2. Breather cover

5. Unscrew and remove timing chain gear screws.

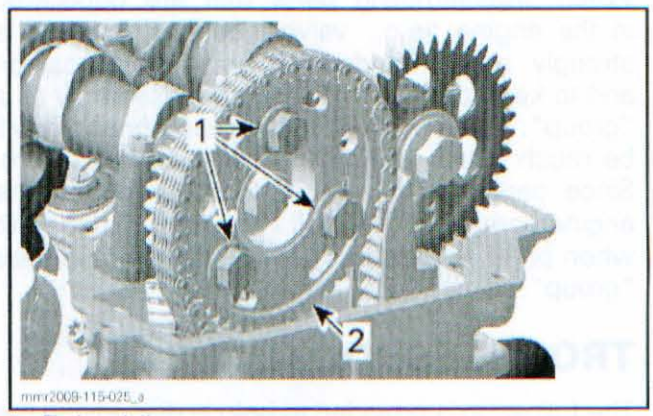

1. Timing chain gear screws
2. Timing chain gear

6. Remove *TIMING CHAIN TENSIONER*, see procedure in this subsection.
7. Remove timing chain guide.

www.midwestmanuals.com

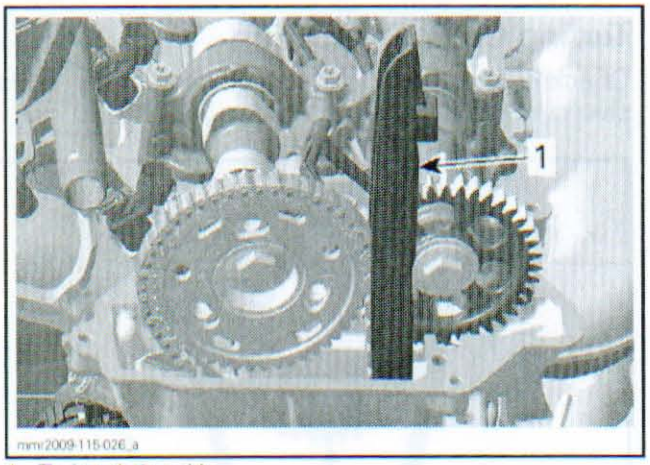

1. Timing chain guide

8. Remove timing chain gear.

NOTE: Secure timing chain with a retaining wire.

Timing Chain Gear Inspection

Check timing chain gear for wear or deterioration. If the gear is worn or damaged, replace timing chain gear and timing chain as a set.

NOTE: For crankshaft timing gear inspection, refer to *CYLINDER BLOCK* subsection.

Check chain guide for wear, cracks or deforming. Replace as required.

Replace chain guide if grooves depth (caused by timing chain) exceed 1.2 mm (.0472 in).

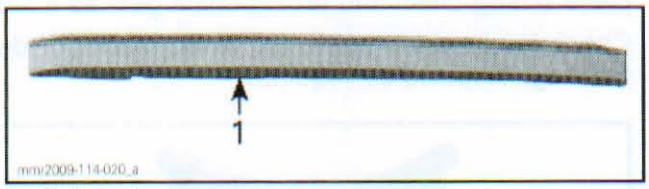

1. Chain guide

Timing Chain Gear Installation

The installation is the reverse of the removal procedure. However, pay attention to the following details.

NOTICE Improper camshaft timing will damage engine components. Make sure camshafts and crankshaft are still locked. If not, lock them before beginning this procedure.

1. Check that marks on camshaft timing gears are still aligned.

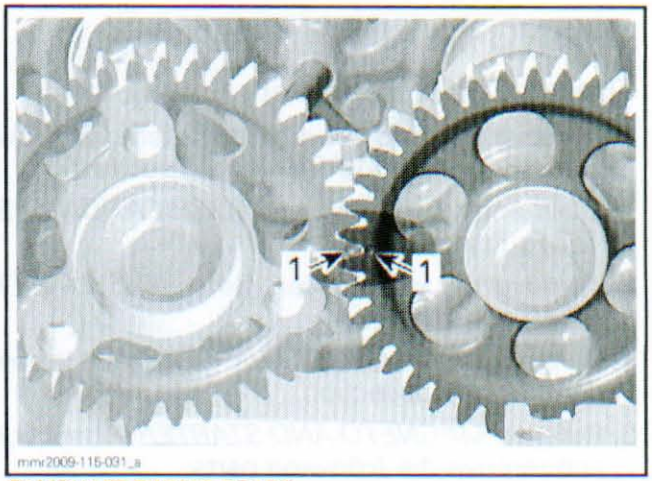

CAMSHAFT TIMING GEARS
1. Marks must be aligned

2. Install timing chain over timing gear. The timing gear mark "IN" must be pointing outside (must be visible from the MAG side).
3. Install timing chain gear over camshaft timing gear on intake side.

NOTE: Timing chain gear fits only in one position. The threaded holes for retaining screws must be in the center of slots.

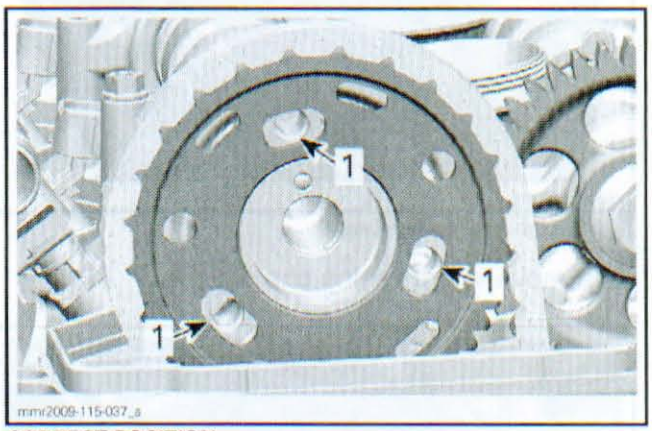

CORRECT POSITION
1. Threaded holes are in center of slots

4. Install timing chain guide.
5. Install *TIMING CHAIN TENSIONER*, see procedure in this subsection.
6. Apply LOCTITE 243 (BLUE) (P/N 293 800 060) on threads of timing chain gear screws.
7. Tighten screws to 30 N•m (22 lbf•ft).
8. Remove camshaft locking tool and crankshaft locking tool.
9. Install remaining parts.

www.midwestmanuals.com

TIMING CHAIN

Timing Chain Removal

1. Remove engine from vehicle. Refer to *ENGINE REMOVAL AND INSTALLATION* subsection.
2. Drain engine oil. Refer to *LUBRICATION SYSTEM* subsection.
3. Remove the valve cover. Refer to *CYLINDER HEAD* subsection.
4. Remove the *TIMING CHAIN GEAR*, see procedure in this subsection.
5. Refer to *MAGNETO AND STARTER* subsection and remove the following parts:
   - Magneto cover
   - Rotor
   - Starter drive gears.
6. Remove oil pump intermediate gears.

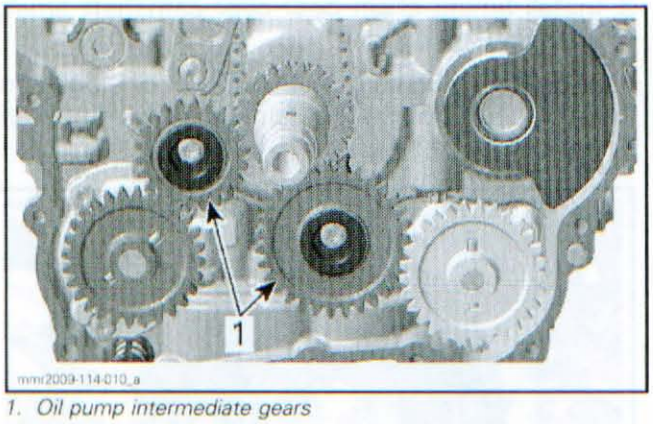

1. Oil pump intermediate gears

7. Remove lower timing chain guide.

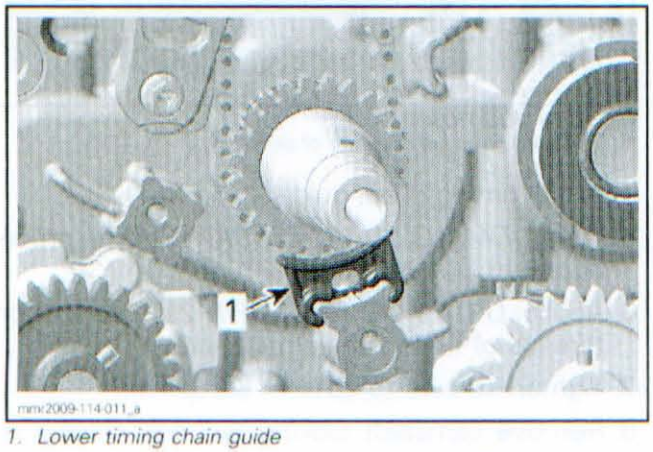

1. Lower timing chain guide

8. Remove timing chain.

NOTE: Mark the operating direction of the timing chain before removal.

Timing Chain Inspection

Check timing chain on timing chain gear for excessive radial play.

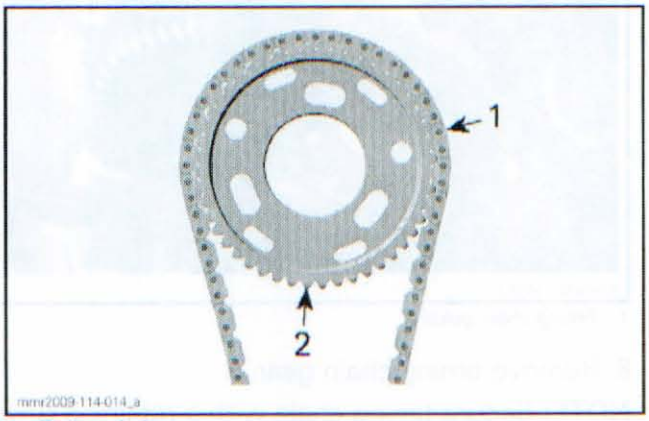

1. Timing chain
2. Timing chain gear

Check timing chain for wear and teeth condition.

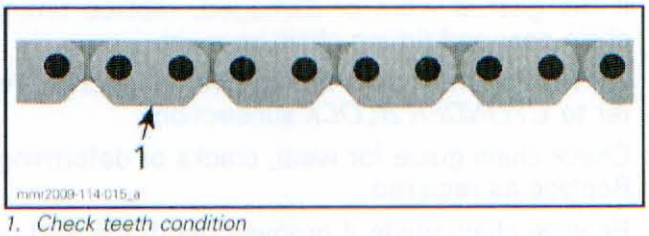

1. Check teeth condition

If timing chain is excessively worn or damaged, replace timing chain and timing chain gear as a set.

Check lower chain guide for wear, cracks or deforming. Replace as required.

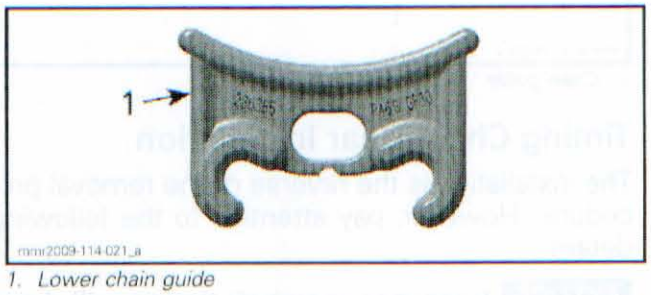

1. Lower chain guide

Replace lower chain guide if grooves depth (caused by timing chain) exceed 1.2 mm (.0472 in).

NOTE: Check also the chain guide (tensioner side).

Timing Chain Installation

The installation is the reverse of the removal procedure. However, pay attention to the following details.

www.midwestmanuals.com

NOTICE Improper camshaft timing will damage engine components. Make sure camshafts and crankshaft are still locked. If not, lock them before beginning this procedure.

1. Install timing chain.

NOTE: If the same timing chain is reinstalled, make sure to reinstall it in the same operating direction as marked during removal procedure.

2. Reinstall lower chain guide to fit timing chain correctly on crankshaft timing gear.

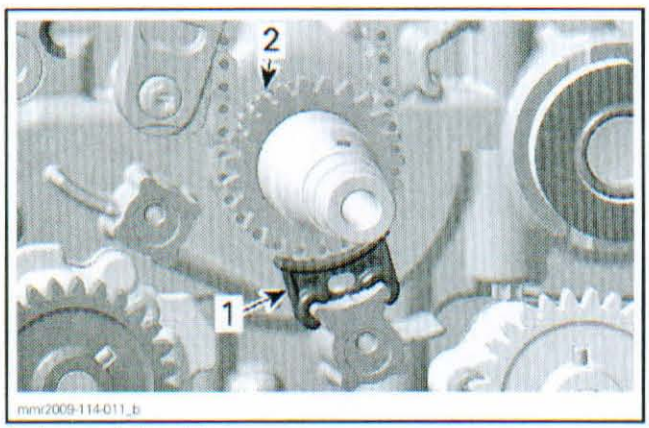

1. Lower chain guide
2. Crankshaft timing gear

3. Continue with *TIMING CHAIN GEAR INSTALLATION* (see procedure in this subsection), to achieve proper camshaft timing.
4. Install all other removed parts.

CHAIN GUIDE (TENSIONER SIDE)

Chain Guide Removal (Tensioner Side)

NOTE: Removal of chain guide is not recommended if there is no need for replacement.

1. Remove the *TIMING CHAIN GEAR*, see procedure in this subsection.
2. Remove the camshaft timing gear on intake side. Refer to *CYLINDER HEAD* subsection.
3. Remove:
   - Retaining screw
   - Distance sleeve
   - Chain guide (tensioner side).

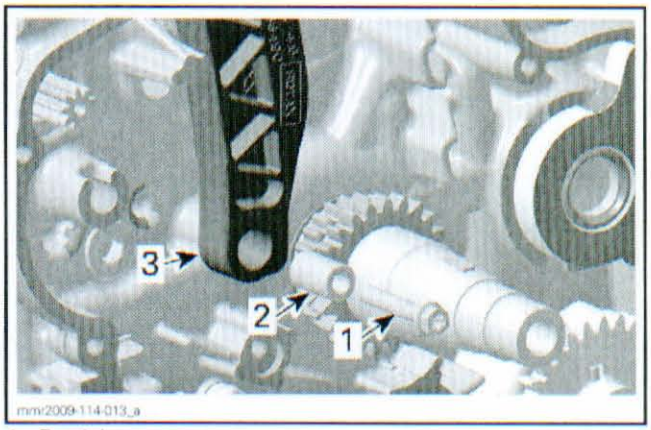

1. Retaining screw
2. Distance sleeve
3. Chain guide

Chain Guide Inspection (Tensioner Side)

Check chain guide for wear, cracks or deforming. Replace as required.

Replace chain guide if grooves depth (caused by timing chain) exceed 1.2 mm (.0472 in).

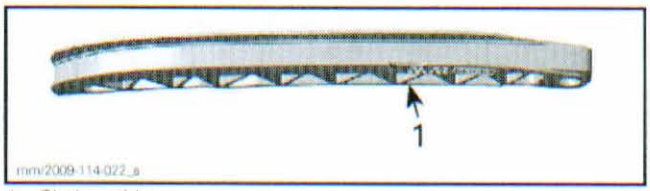

1. Chain guide

Chain Guide Installation (Tensioner Side)

The installation is the reverse of the removal procedure. However, pay attention to the following details.

NOTICE Improper camshaft timing will damage engine components. Make sure camshafts and crankshaft are still locked. If not, lock them before beginning this procedure.

1. Apply LOCTITE 243 (BLUE) (P/N 293 800 060) on retaining screw of chain guide.
2. Tighten retaining screw to 11 N•m (97 lbf•**in**).
3. Properly reinstall intake camshaft timing gear on camshaft. Refer to *CYLINDER HEAD* subsection.

www.midwestmanuals.com

www.midwestmanuals.com

CYLINDER HEAD

SERVICE TOOLS

Description	Part Number	Page
CAMSHAFT LOCKING TOOL	529 036 149	117
ENGINE LEAK DOWN TEST KIT	529 035 661	108
VALVE SPRING COMPRESSOR CUP	529 036 161	124
VALVE SPRING COMPRESSOR	529 035 724	124

SERVICE TOOLS – OTHER SUPPLIER

Description	Part Number	Page
SNAP-ON VALVE HOLDER	VL2	127
SNAP-ON VALVE STEM SEAL PLIERS	YA 8230	126

SERVICE PRODUCTS

Description	Part Number	Page
KLÜEBER PASTE 46 MR 401	420 297 616	121

www.midwestmanuals.com

VALVE COVER

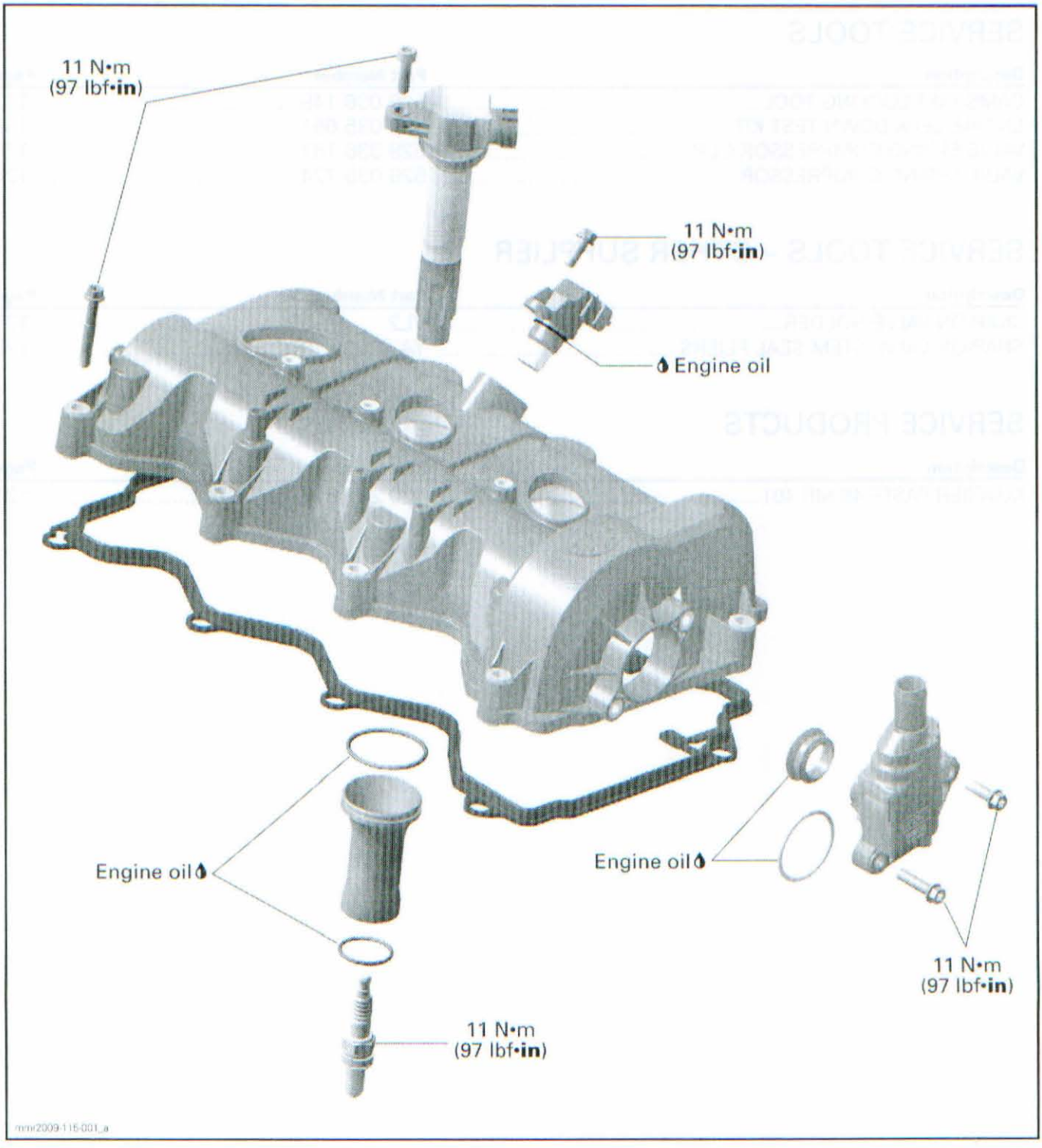

www.midwestmanuals.com

CAMSHAFTS

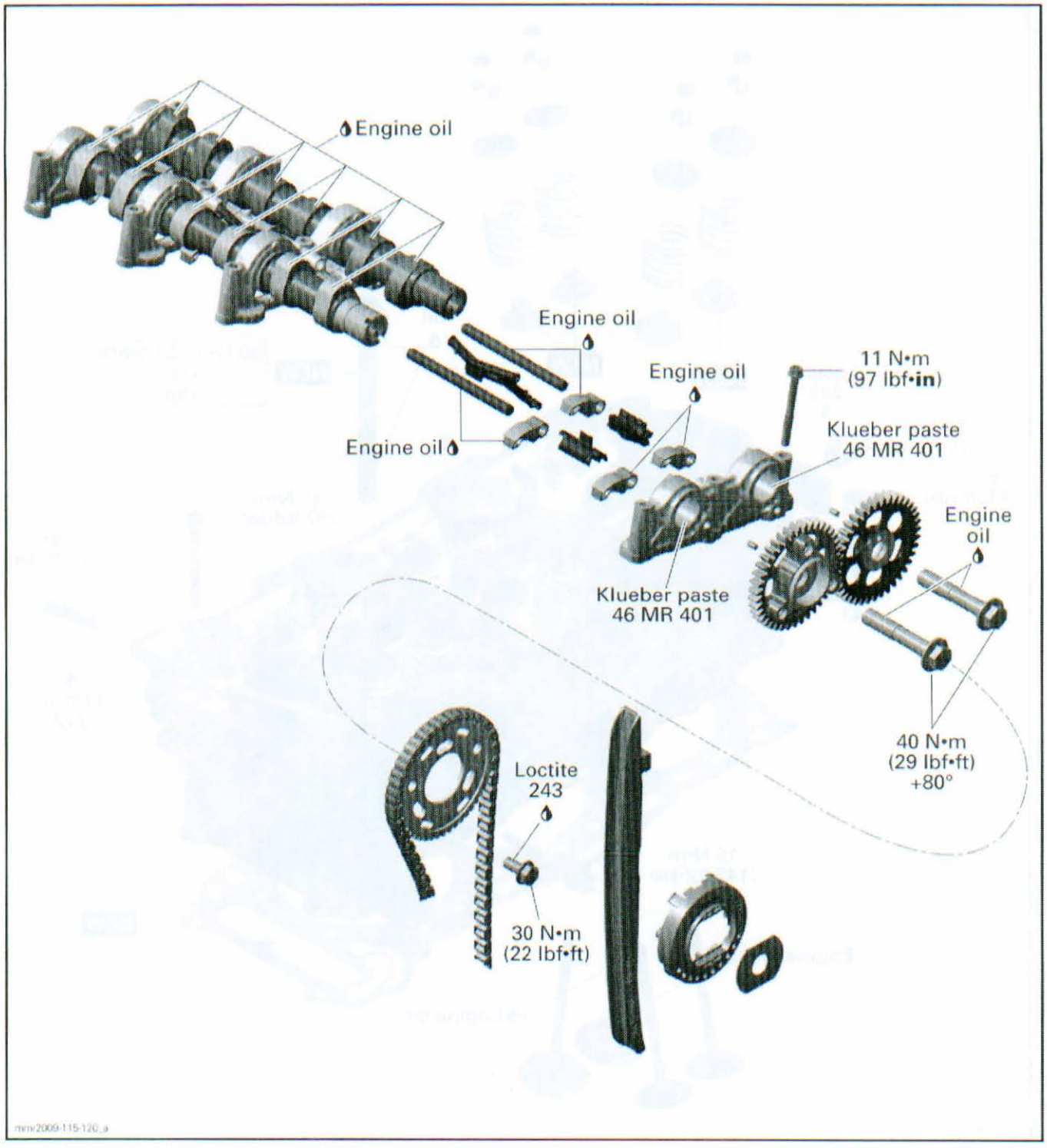

www.midwestmanuals.com

CYLINDER HEAD

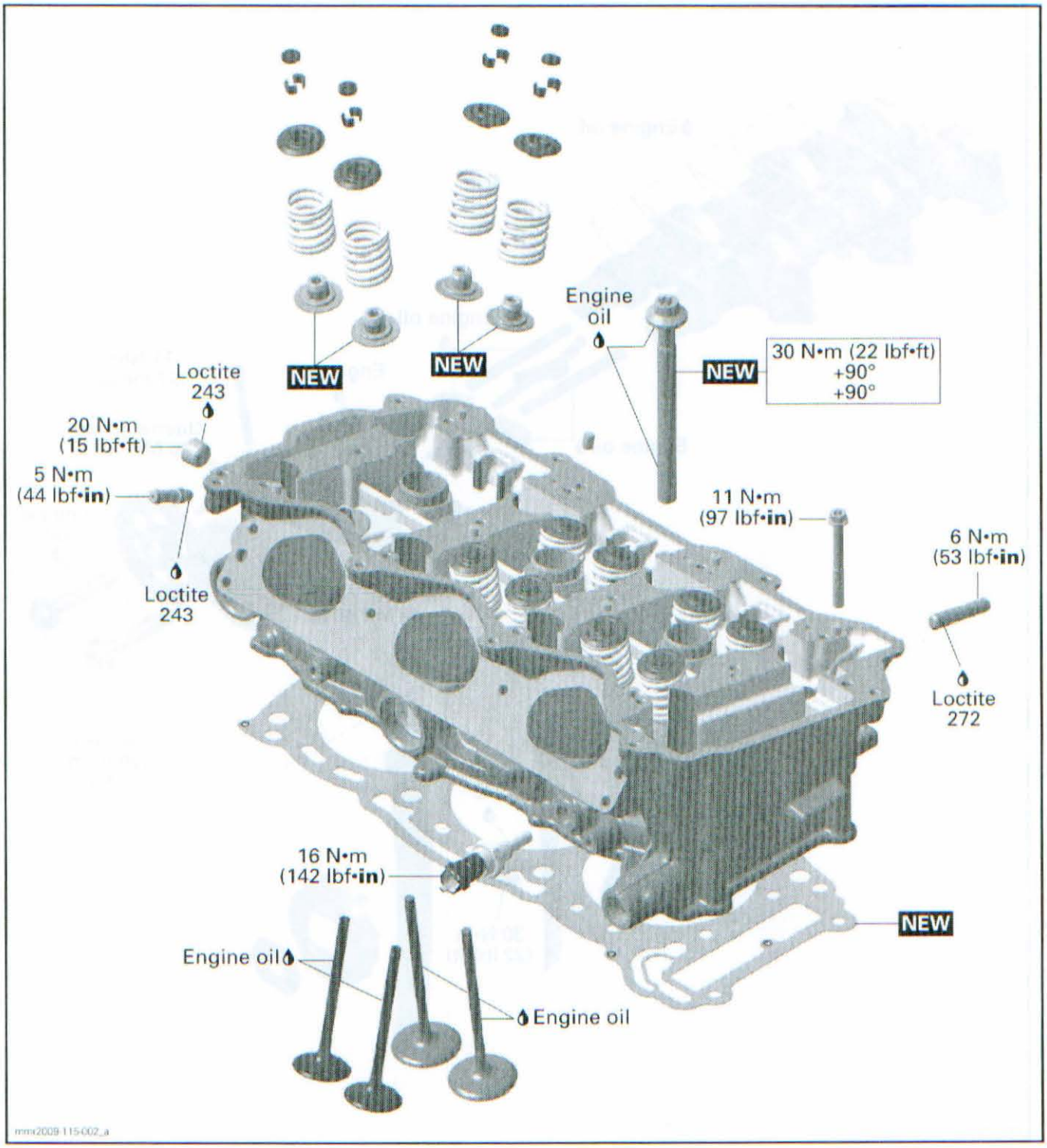

www.midwestmanuals.com

GENERAL

NOTE: For a better understanding, some illustrations are taken with engine out of vehicle.

Always disconnect BLACK (-) cable from the battery, then RED (+) cable before working on the engine.

⚠ WARNING

Always disconnect BLACK (-) cable first and reconnect last.

During assembly/installation, use the torque values and service products as in the exploded views.

Clean threads before applying a threadlocker. Refer to *SELF-LOCKING FASTENERS* and *LOCTITE APPLICATION* at the beginning of this manual for complete procedure.

⚠ WARNING

Torque wrench tightening specifications must be strictly adhered to.
Locking devices (e.g.: locking tabs, elastic stop nuts, cotter pin, etc.) must be replaced with new ones.

Hoses, cables or locking ties removed during a procedure must be reinstalled as per factory standards.

When disassembling parts that are duplicated in the engine, (e.g.: valves, springs, etc.), it is strongly recommended to note their position and to keep the parts of the same assembly as a "group". If you find a defective component, it will be much easier to find the cause of the failure. Since parts were break-in together during the engine operation, they will keep their matched fit when parts are reassemble together within their "group".

ADJUSTMENT

VALVE CLEARANCE

Check and adjust the valve clearance only on a cold engine, at room temperature.

When the valve clearance has to be measured or adjusted, the piston must be at TDC of compression stroke.

Valve Clearance Inspection

1. Remove the *VALVE COVER*, see procedure in this subsection.
2. Remove spark plugs.
3. Using the drive pulley, turn engine counterclockwise until camshaft lobes are opposite to cam followers.
4. Use a feeler gauge and check the valve clearance between camshaft and cam follower.

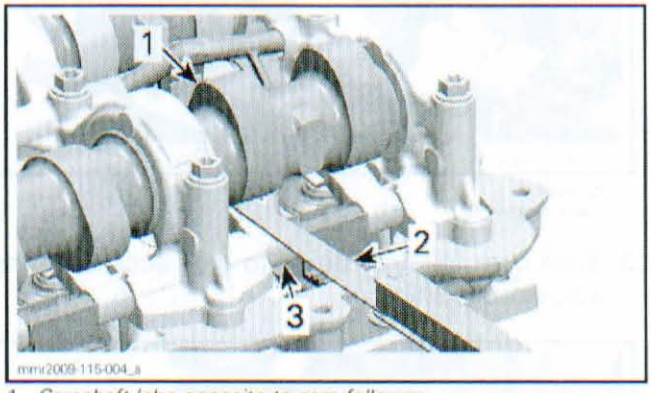

1. Camshaft lobe opposite to cam follower
2. Feeler gauge
3. Cam follower

5. Repeat steps 3 and 4 for all intake and exhaust valves.
6. Adjust the valve clearance if out of specification, see *VALVE CLEARANCE ADJUSTMENT*.

VALVE CLEARANCE	
EXHAUST	0.30 mm to 0.40 mm (.0118 in to .0157 in)
INTAKE	0.10 mm to 0.20 mm (.0039 in to .0079 in)

Valve Clearance Adjustment

If the valve clearance is out of specification, adjust valve clearance by replacing the adjustment shim of the respective valve. Proceed as follows.

1. Turn drive pulley counterclockwise and position appropriate camshaft lobe opposite to cam follower.
2. Remove cam follower spacer.

www.midwestmanuals.com

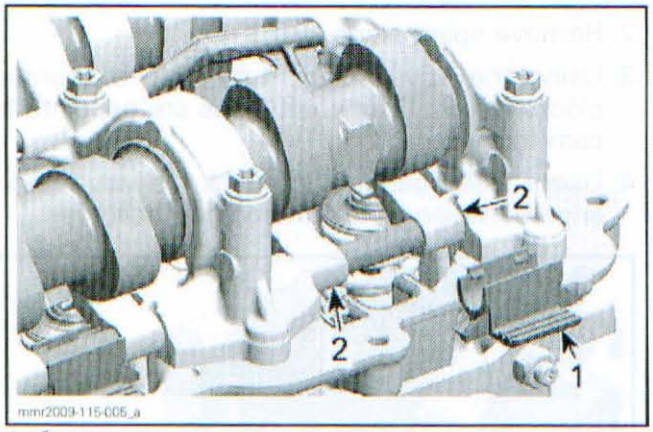

1. *Spacer*
2. *Cam followers*

3. Slide cam follower aside to gain access to the adjustment shim.

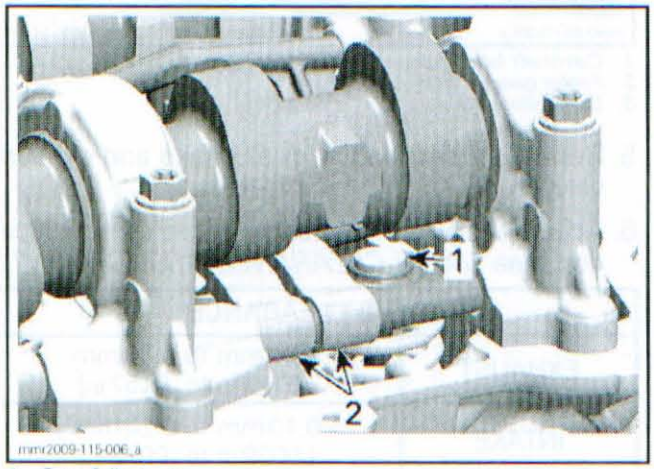

1. *Cam followers*
2. *Adjustment shim*

4. Remove adjustment shim and check its thickness with a micrometer.

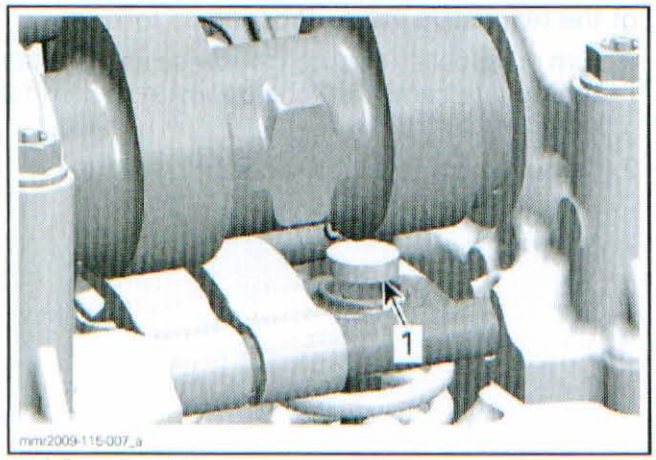

1. *Adjustment shim*

5. Choose the proper adjustment shim thickness to reach the specified valve clearance.

6. After reassembly of parts, measure the valve clearance again.

If valve clearance is still out of specification, repeat all steps until the specified clearance is obtained.

INSPECTION

CYLINDER LEAK TEST

General

Before performing the cylinder leak test, verify the following:

- Clamp tightness
- Hoses condition.

NOTE: For best accuracy, the leak test should be done with the engine at normal operating temperature.

⚠ WARNING

Prevent burning yourself due to handling on the hot engine.

NOTE: The following steps are the same for each cylinder.

Preparation

1. Remove the *VALVE COVER*, see procedure in this subsection.
2. Remove spark plugs.
3. Using the drive pulley, turn the engine counterclockwise to bring piston to TDC of compression stoke. Use a dial gauge or a suitable tool to position the piston to TDC.

NOTE: The piston must be set precisely to TDC of compression stroke. If this is not ensured the engine will continue to rotate when pressure builds up.

Leak Test

1. Install a gauge adaptor of the ENGINE LEAK DOWN TEST KIT (P/N 529 035 661) into spark plug hole.

www.midwestmanuals.com

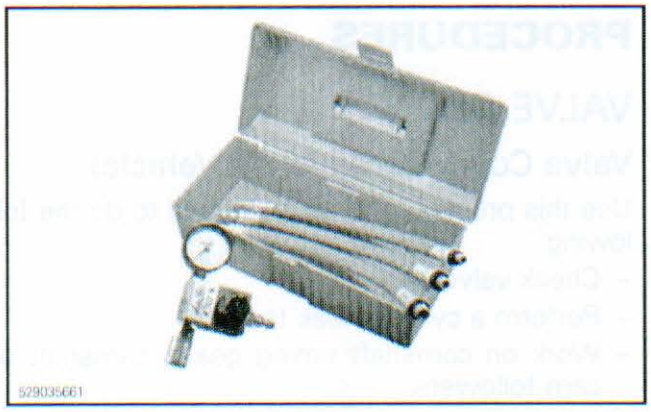

2. Connect the leak down tester to an adequate air supply.
3. Set needle of measuring gauge to zero.

NOTE: All testers have specific instructions on gauge operation and required pressure. Refer to manufacturer's instructions.

4. Supply combustion chamber with air pressure.

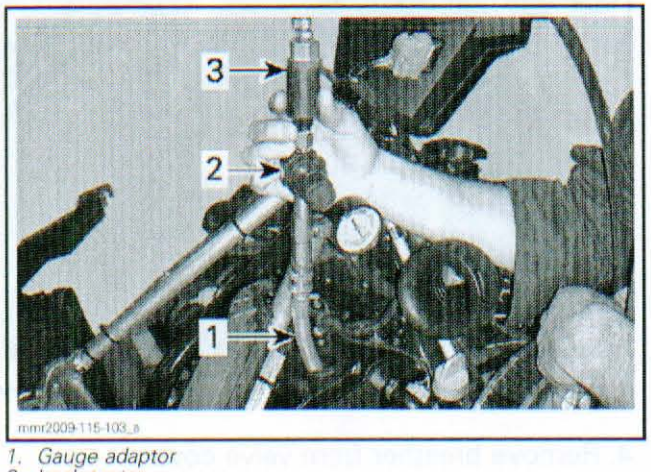

1. Gauge adaptor
2. Leak tester
3. Air supply hose

5. Gently tap on each valve spring retainer to remove carbon deposits from valves.
6. Note the amount or percentage of leakage (depending on tester).

LEAKAGE PERCENTAGE	ENGINE CONDITION
0% to 15%	Excellent condition
16% to 25%	Good condition
26% to 40%	Fair condition; reduced engine performance
41% and higher	Poor condition, diagnose and repair engine

Diagnosis

Listen for air leaks.

- Air escaping on intake port or throttle body means leaking intake valve(s).
- Air escaping on exhaust port means leaking exhaust valve(s).
- Air bubbles out of coolant tank means leaking cylinder head gasket.
- Air or coolant escaping from cylinder head means damaged gasket or loosened screws.
- Air escaping into crankcase area means excessively worn cylinder or broken piston rings.
- Air or oil escaping from crankcase means damaged gasket or loosened screws.

Repair Tips

Blue exhaust gas means damaged or worn piston rings or valve stem seals.

White exhaust gas means damaged cylinder head gasket.

Coolant tank cap opening without overheat means damaged cylinder head gasket.

Assembly

Reverse the preparation procedure.

TROUBLESHOOTING

The following is provided to help in diagnosing the probable source of troubles. It is a guideline and should not be assumed to show all causes for all problems.

Always check for fault codes. If a fault code is detected, service the fault code first. Refer to *MONITORING SYSTEM AND FAULT CODES* subsection.

NOTE: When diagnosing an engine problem, always perform the cylinder leak test. This will help pinpoint a problem. Refer to *CYLINDER LEAK TEST* in this subsection.

UNUSUAL ENGINE NOISE OR VIBRATIONS

1. **Improper valve clearance adjustment.**
   - *Adjust valve clearance.*
2. **Cam followers or cam follower shaft worn out.**
   - *Check and replace damaged parts.*
3. **Cam follower spacers got loose.**
   - *Check if cam follower spacers are in place.*

www.midwestmanuals.com

4. Camshaft(s) or camshaft holder(s) worn out.
   - *Check and replace damaged parts.*
5. Faulty chain tensioner.
   - *Replace chain tensioner. Refer to TIMING CHAIN subsection.*
6. Chain guide(s) worn out.
   - *Replace chain guide(s). Refer to TIMING CHAIN subsection.*
7. Stretched timing chain or worn out sprockets.
   - *Replace timing chain and sprockets. Refer to TIMING CHAIN subsection.*
8. Timing chain gear screws got loose.
   - *Retighten screws with recommended torque.*
9. Incorrect camshaft timing.
   - *Replace damaged components and readjust camshaft timing.*

OIL LEAKAGE FROM CYLINDER HEAD

1. Valve cover gasket is leaking.
   - *Replace valve cover gasket and retighten valve cover with recommended torque.*
   - *Check valve cover for cracks or other damage.*
2. Spark plug tube O-rings are leaking.
   - *Replace spark plug tube O-rings.*
   - *Clean spark plug area from oil spillage.*
3. Breather is leaking.
   - *Replace breather O-ring.*
4. Cylinder head gasket is leaking.
   - *Check cylinder head for damage.*
   - *Replace cylinder head gasket and retighten screws with recommended torquing procedure.*

ENGINE SUDDENLY TURNS OFF OR LACKS ACCELERATION OR POWER

1. Valve clearance too tight.
   - *Adjust valve clearance.*
2. Incorrect camshaft timing.
   - *Replace damaged components and readjust camshaft timing.*
3. Intake or exhaust valves are leaking.
   - *Perform a CYLINDER LEAK TEST. Repair or replace damaged components.*
4. Broken valve spring(s).
   - *Replace defective parts.*

PROCEDURES

VALVE COVER

Valve Cover Removal (In Vehicle)

Use this procedure when you need to do the following:
- Check valve clearance.
- Perform a cylinder leak test.
- Work on camshaft timing gears, camshaft or cam followers.

1. Remove the air intake silencer. Refer to *AIR INTAKE SYSTEM* subsection.
2. Remove the muffler and the exhaust manifold. Refer to *EXHAUST SYSTEM* subsection.
3. Disconnect breather hose from valve cover and air intake adapter.



1. Breather hose

4. Remove breather from valve cover.

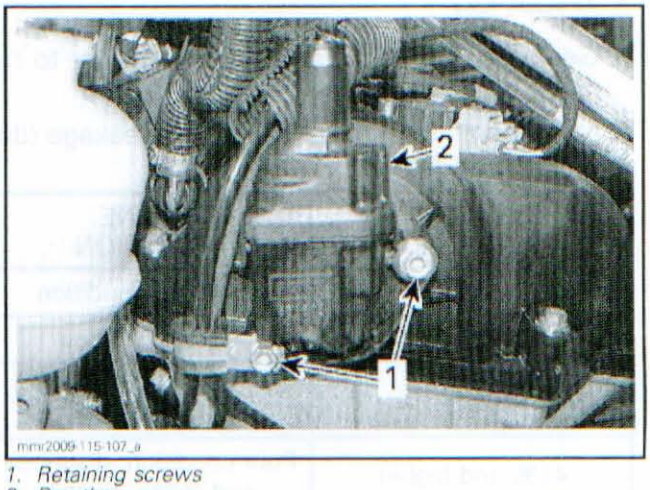

1. Retaining screws
2. Breather

www.midwestmanuals.com

5. Cut locking tie retaining the CAPS sensor connector to sensor.
6. Unplug and remove the CAPS sensor from the valve cover.

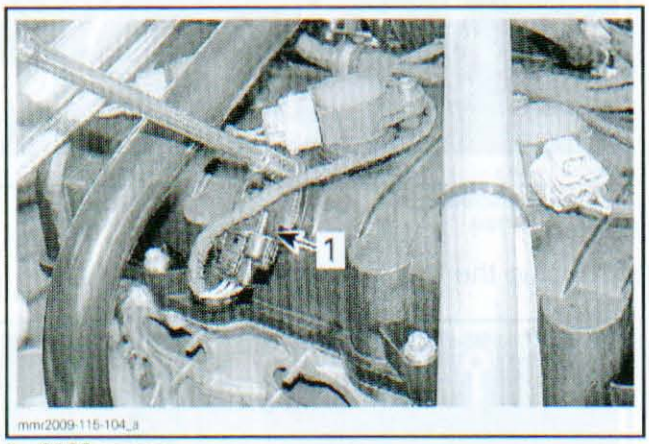

1. CAPS sensor

7. Unplug and remove ignitions coils.

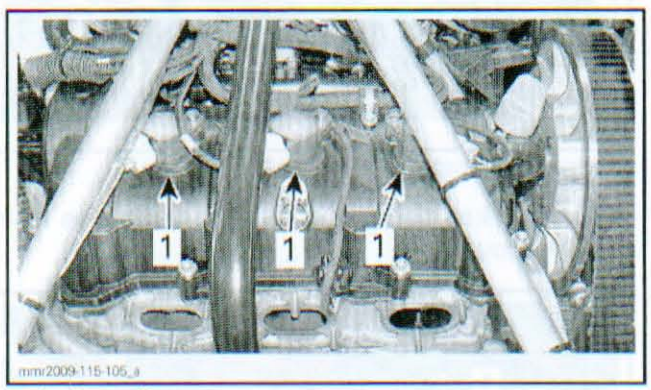

1. Ignition coils

8. Remove screws securing the harness to valve cover.

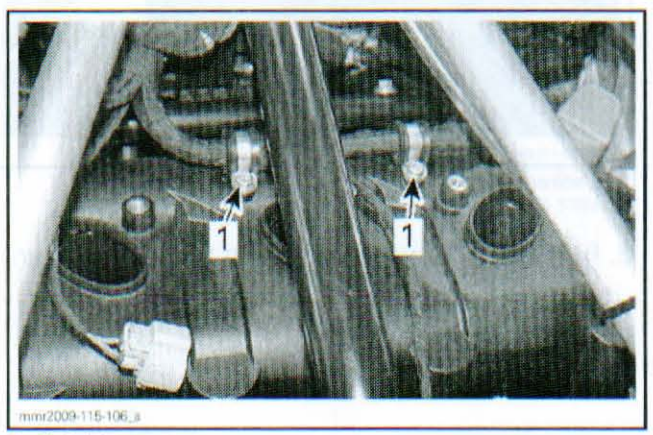

1. Retaining screws

9. Unplug all fuel injectors.
10. Disconnect vent tube from the valve cover.



1. Cut this Oetiker clamp
2. Vent tube

11. Remove screws (8) retaining valve cover.

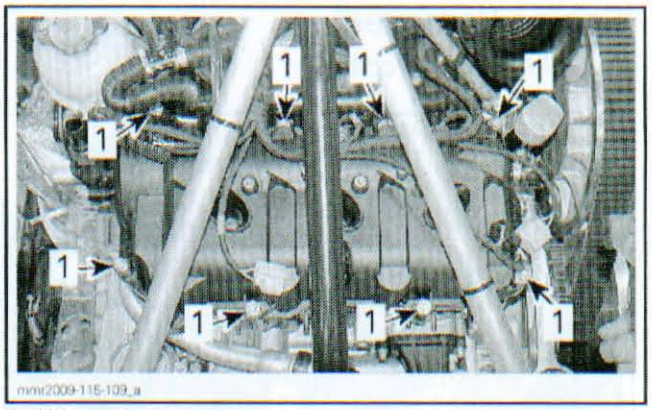

1. Valve cover screws

12. Pull up the cover.
13. Tilt the front of the valve cover toward the exhaust manifold.



1. Valve cover

14. Move the valve cover toward the RH side of the vehicle.

www.midwestmanuals.com

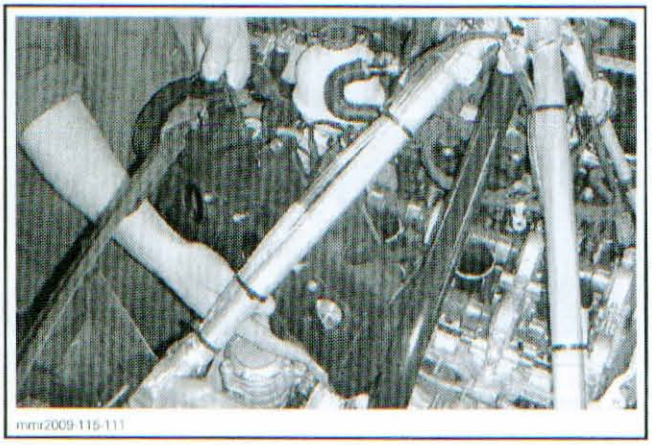
mmr2009-115-111

Valve Cover Removal (Engine Removed)

1. Unplug ignition coils.

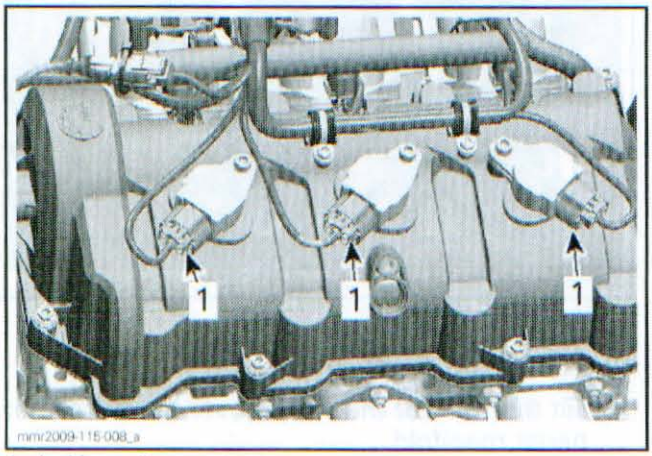

mmr2009-115-008_a

1. Ignition coil connectors

2. Remove ignition coils.

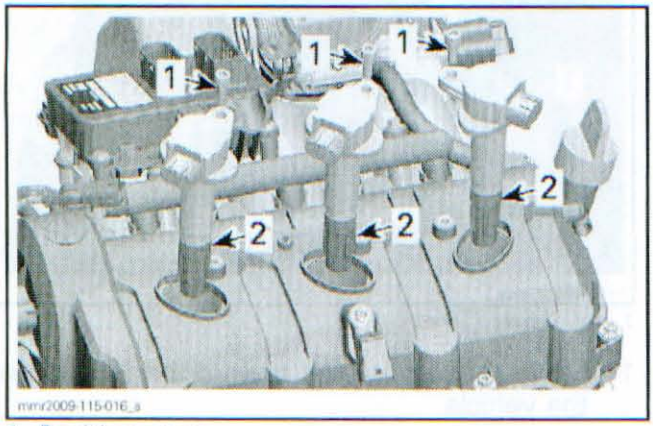

mmr2009-115-016_a

1. Retaining screws
2. Ignition coils

3. Remove screws securing the harness to the valve cover.

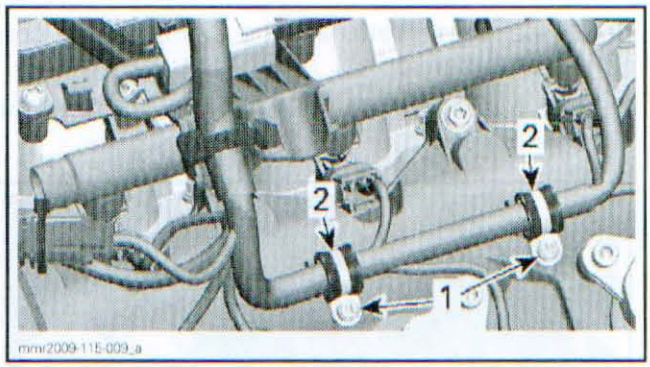

mmr2009-115-009_a

1. Retaining screws
2. Cable clamps

4. Unplug the fuel injector connectors.

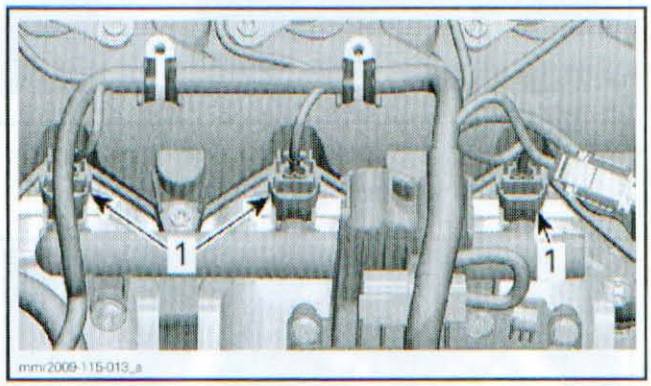

mmr2009-115-013_a

1. Injector connectors

5. Cut Oetiker clamp and remove vent tube from valve cover.

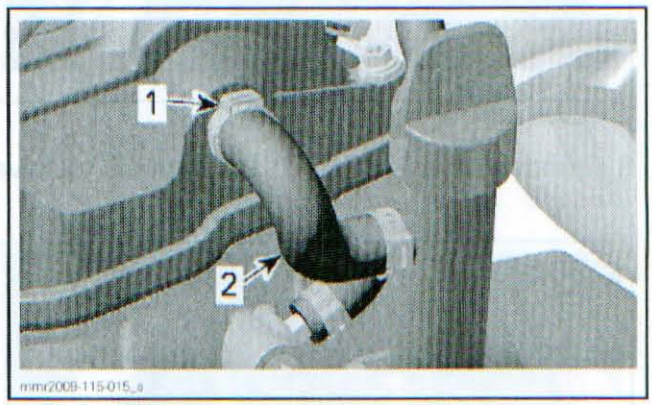

mmr2009-115-015_a

1. Oetiker clamp
2. Vent tube

6. Remove screws (8) retaining the valve cover.

www.midwestmanuals.com

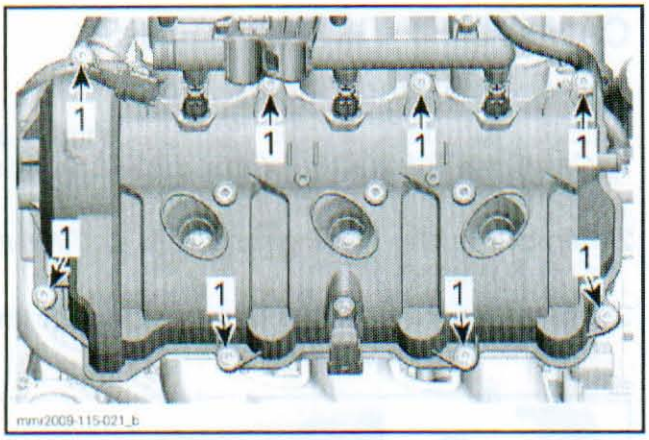

1. Valve cover screws

7. Remove valve cover and its gasket.

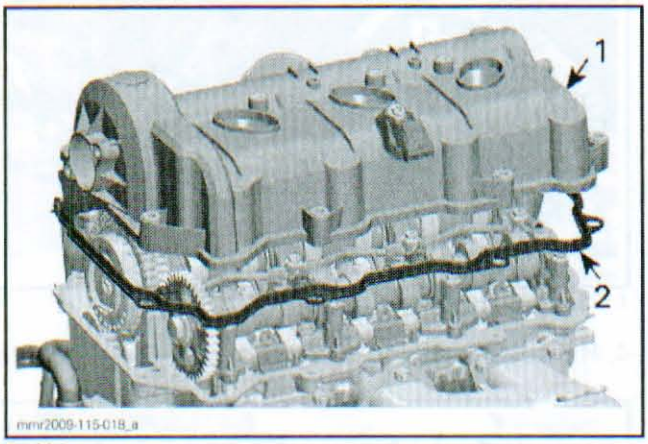

1. Valve cover
2. Gasket

8. Remove spark plug tubes from valve cover.

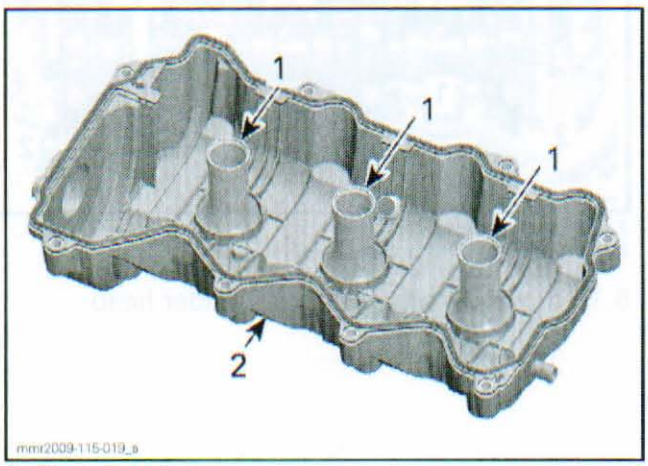

1. Spark plug tubes
2. Valve cover

Valve Cover Inspection

Check the valve cover for cracks or other damages.

Check if the valve cover gasket is brittle, hard or otherwise damaged.

Replace defective parts.

Spark Plug Tube Inspection

Check spark plug tubes for cracks or other damages.

Check if O-rings are brittle, hard or otherwise damaged.

Replace defective parts.

Valve Cover Installation

For installation reverse the removal procedure. Pay attention to the following details.

1. Apply engine oil on spark plug tube O-rings before installation.
2. Ensure that cam follower spacers (for the intake camshaft) are in place during installation of spark plug tubes.

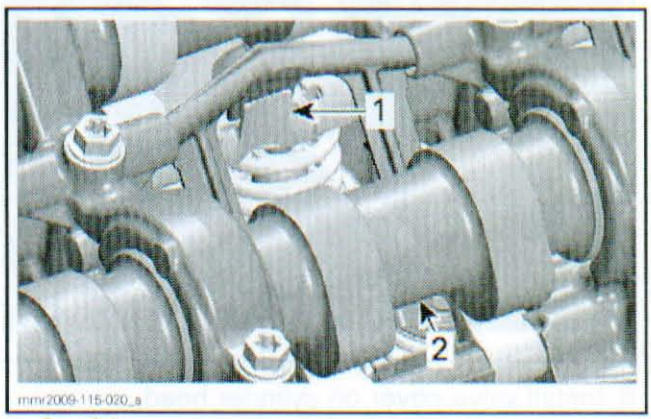

1. Cam follower spacer properly in place
2. Exhaust camshaft

3. Properly fit gasket into the groove of valve cover.

If the engine is not in the vehicle, go to step 8. If the engine is installed in the vehicle, continue with next step.

4. Insert valve cover by the RH side. Align the first recess with the front frame member.

www.midwestmanuals.com

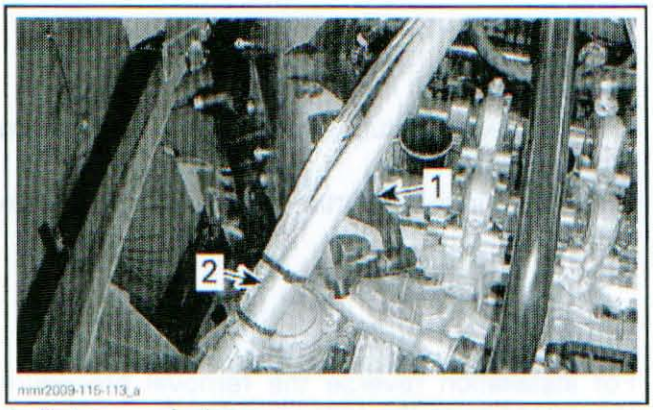

1. First recess of valve cover
2. Front frame member

5. Slide the valve cover inside engine compartment.

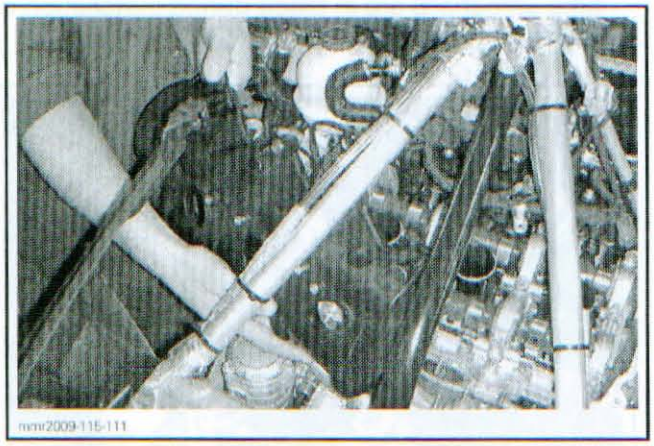

6. Install valve cover on cylinder head.
7. Push down the valve cover to insert spark plug tubes.
8. Install valve cover screws according to the following sequence.

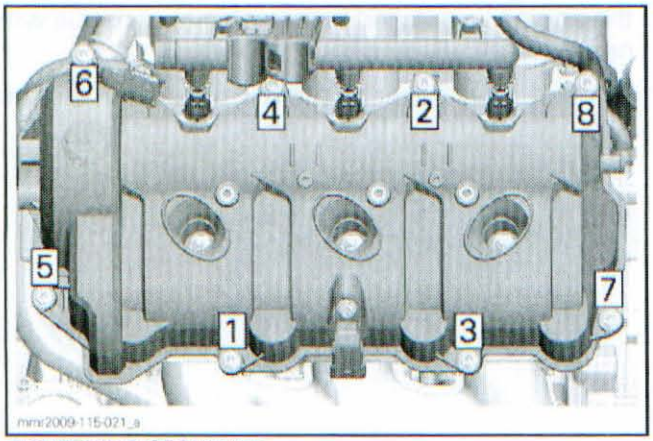

TIGHTENING SEQUENCE

CAMSHAFT TIMING GEARS

Camshaft timing Gear Removal

1. Lock camshaft, refer to procedure in *CAMSHAFT LOCKING PROCEDURE* in this subsection.
2. Remove timing chain gear. Refer to *TIMING CHAIN* subsection.
3. Using a breaker bar and a 16 mm socket, loosen camshaft timing gears screws.

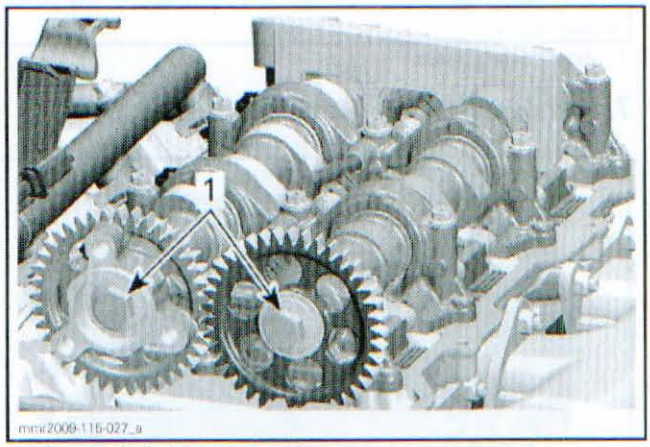

1. Camshaft timing gears screws

4. Remove retaining screws of camshaft holders.

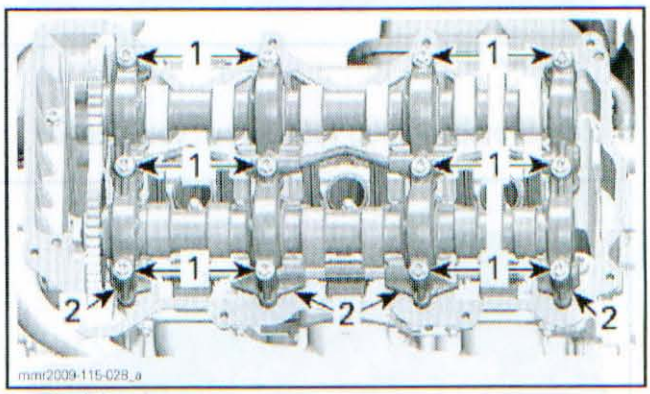

1. Retaining screws
2. Camshaft holders

5. Remove camshafts from cylinder head.

www.midwestmanuals.com

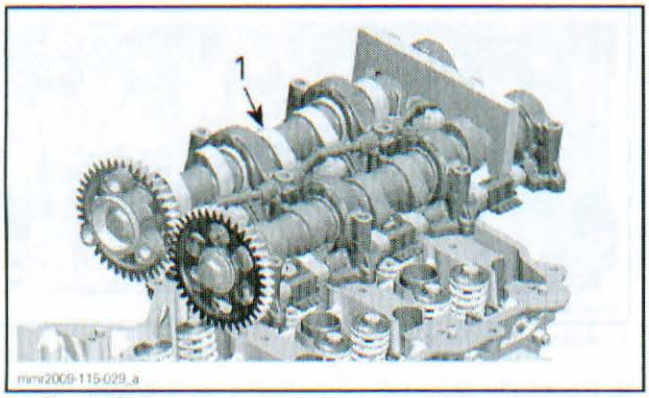

1. Camshafts

6. Remove camshaft timing gears from camshafts.

Camshaft Timing Gear Inspection

Check camshaft timing gears for wear or deterioration.

Replace both camshaft timing gears as a set, if damaged.

Camshaft Timing Gear Installation

The installation is the reverse of the removal procedure. However, pay attention to the following.

1. Properly reinstall camshaft timing gears on camshafts as follows:
   1.1 Ensure that needle pin of camshaft timing gear fits into groove in camshaft.

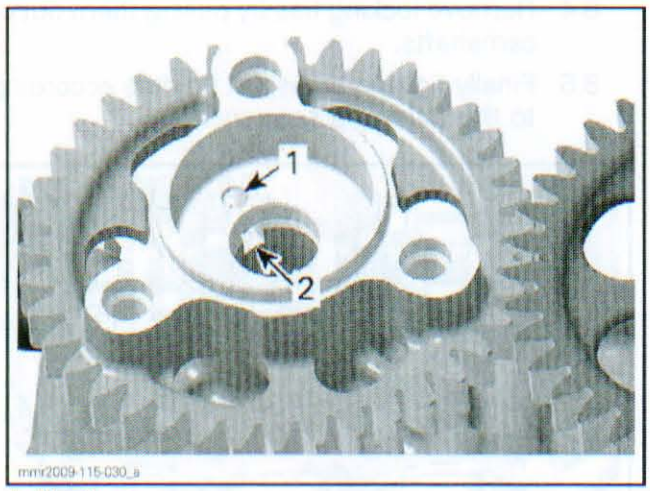

1. Needle pin
2. Groove

2. Marks on camshaft timing gears must be aligned during installation.

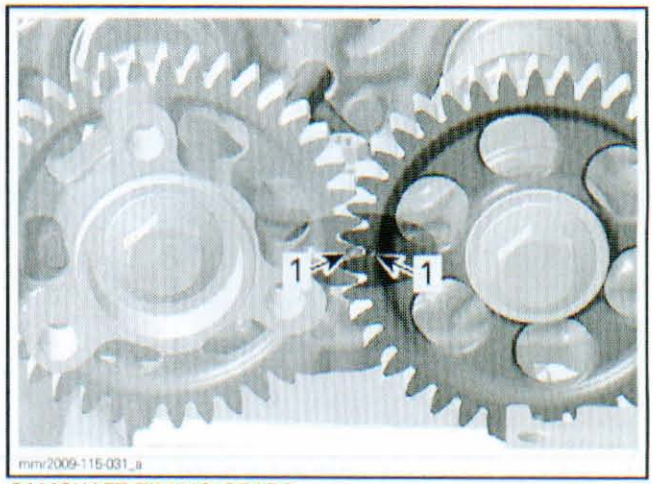

CAMSHAFT TIMING GEARS
1. Marks must be aligned

3. If camshaft locking tool has been removed, reinstall it on camshafts.
4. Apply engine oil on threads of camshaft timing gear screws and install them. Do not torque yet.
5. Turn the camshafts upside down.
6. Using a long locking tie attach cam followers.

NOTE: The locking tie will retain cam followers during the installation of the camshafts. Use the same procedure for both camshafts.

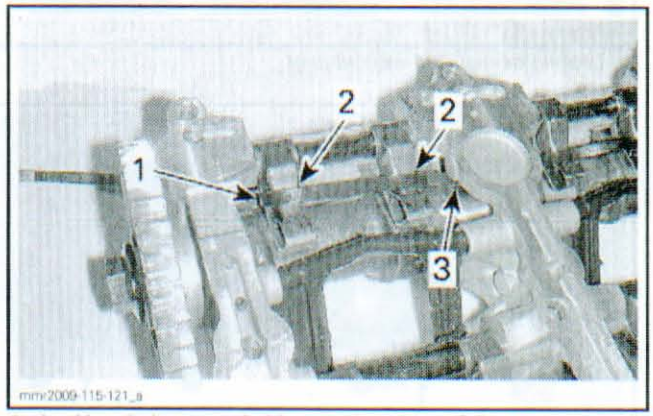

1. Locking tie between holder no. 1 and cam follower
2. Locking tie over cam followers
3. Locking tie between camshaft and its holder no. 2

www.midwestmanuals.com

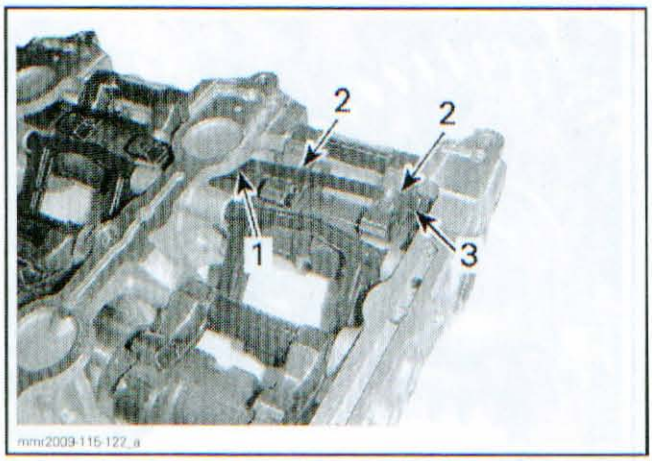

1. *Locking tie between camshaft and its holder no. 3*
2. *Locking tie over cam followers*
3. *Locking tie between cam follower and holder no. 4*

NOTE: If two locking ties must be used to attach one side, make sure both attachment ends are on the top side of camshafts.

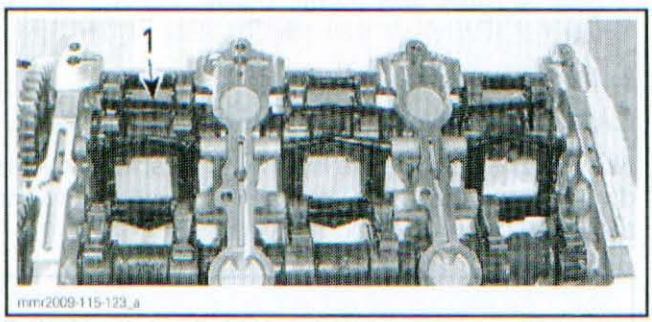

1. *Locking tie installed without joint*

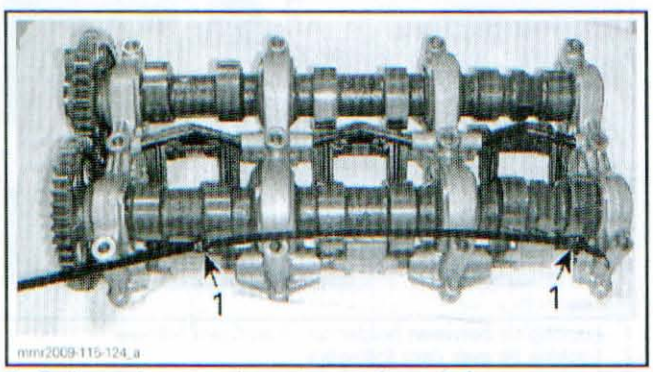

1. *Both attachment ends on the top of camshafts*

7. Ensure all valve adjustment shims are in place, prior to install camshafts.

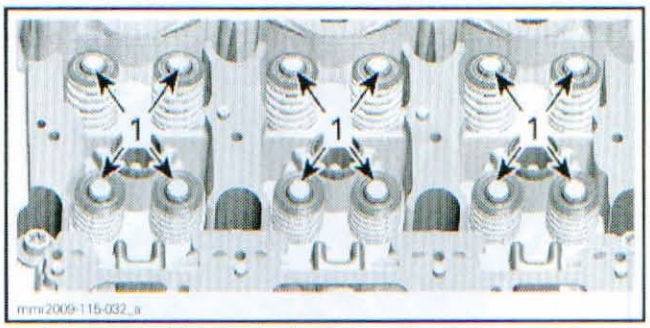

1. *Adjustment shims are in place*

8. Carefully reinstall camshafts as follows.
   - 8.1 Move camshafts to their final position.
   - 8.2 Check if all shims and all cam followers are in place.

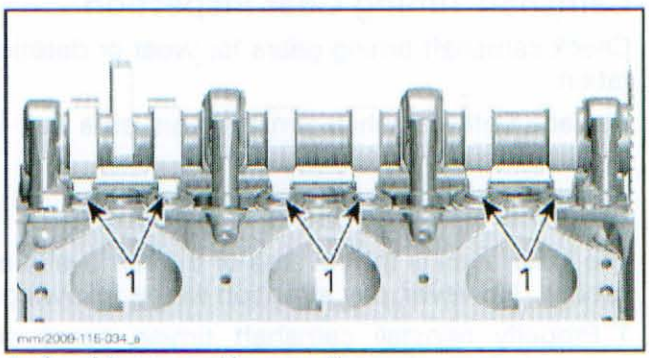

1. *Cam followers position over shims*

   - 8.3 Install loosely all screws securing camshaft holders.
   - 8.4 Remove locking ties by pulling them out of camshafts.
   - 8.5 Finally tighten camshaft holders according to the following sequence.

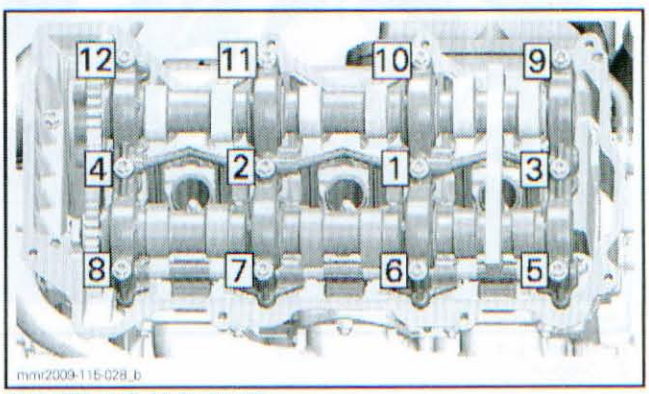

TIGHTENING SEQUENCE

9. Tighten camshaft timing gears screws to 40 N•m (30 lbf•ft).
   - 9.1 Finish tightening screws turning an additional 80° rotation with a torque angle gauge.

www.midwestmanuals.com

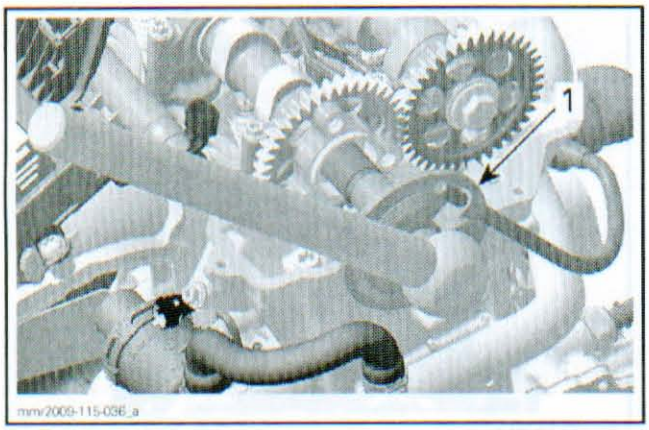

1. Torque angle gauge

NOTE: Make sure that crankshaft and camshaft are still locked. In this condition, marks on camshaft timing gears must be aligned.

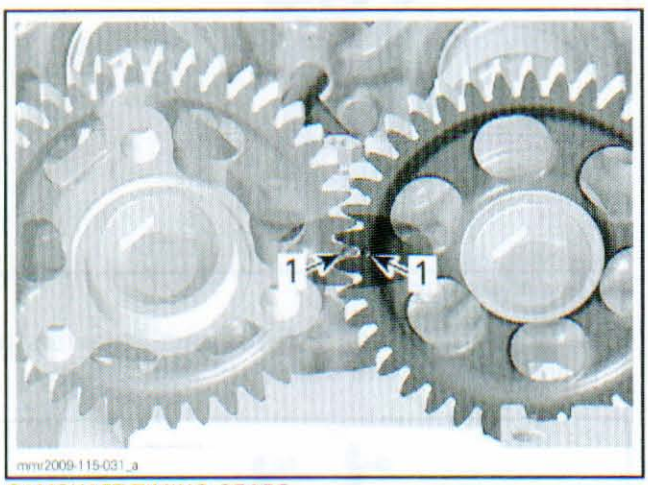

CAMSHAFT TIMING GEARS
1. Marks must be aligned

10. Properly install timing chain gear. Refer to *TIMING CHAIN* subsection.
11. Remove camshaft locking tool and crankshaft locking tool.
12. Check valve clearance. Refer to *VALVE CLEARANCE* in this subsection.
13. Install remaining parts.

CAMSHAFTS

Camshaft Locking Procedure

1. Remove *VALVE COVER*, see procedure in this subsection.
2. Lock crankshaft, refer to procedure in *CYLINDER BLOCK* subsection.
3. Lock camshaft using the CAMSHAFT LOCKING TOOL (P/N 529 036 149).

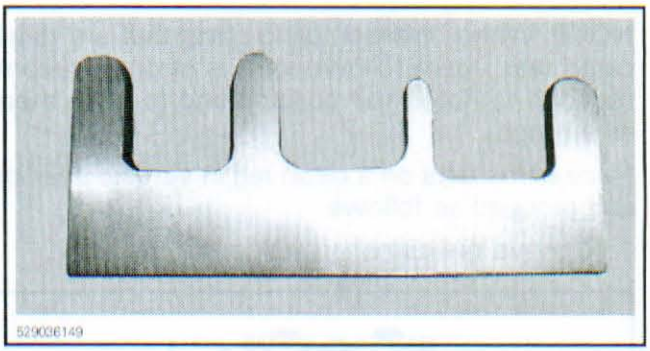

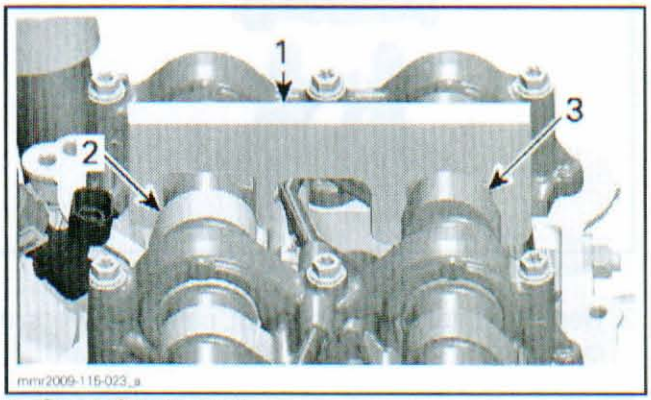

1. Camshaft locking tool
2. Intake camshaft
3. Exhaust camshaft

Camshaft Removal

Refer to *CAMSHAFT TIMING GEAR* in this subsection to remove camshafts.

Camshaft Disassembly

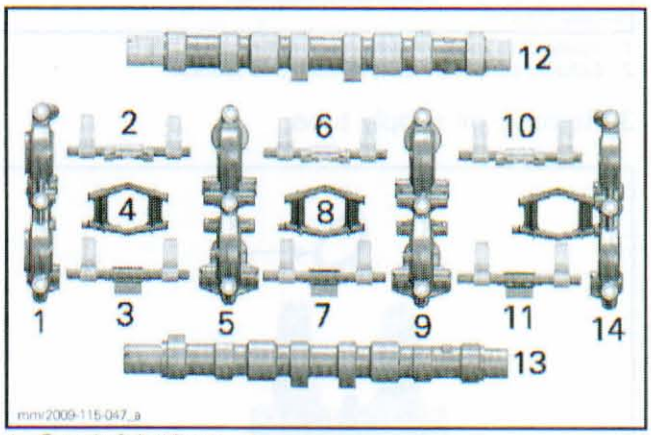

1. Camshaft holder no. 1
2. Intake cam followers with shaft and spacer, cylinder 3
3. Exhaust cam followers with shaft and spacer, cylinder 3
4. Oil supply tube, cylinder 3
5. Camshaft holder no. 2
6. Intake cam followers with shaft and spacer, cylinder 2
7. Exhaust cam followers with shaft and spacer, cylinder 2
8. Oil supply tube, cylinder 2
9. Camshaft holder no. 3
10. Intake cam followers with shaft and spacer, cylinder 1
11. Exhaust cam followers with shaft and spacer, cylinder 1
12. Intake camshaft
13. Exhaust camshaft
14. Camshaft holder no. 4

www.midwestmanuals.com

NOTE: When disassembling parts that are duplicated (e.g.: cam followers), it is strongly recommended to note their position and to keep them as a group.

Place camshafts on a clean rag in vertical position and proceed as follows.

1. Remove the camshaft holder no. 1.

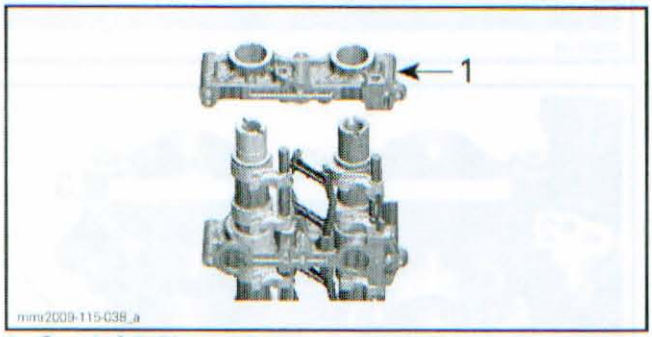

1. Camshaft holder no. 1

2. Remove intake and exhaust cam followers of cylinder no. 3 with their shaft and spacer.

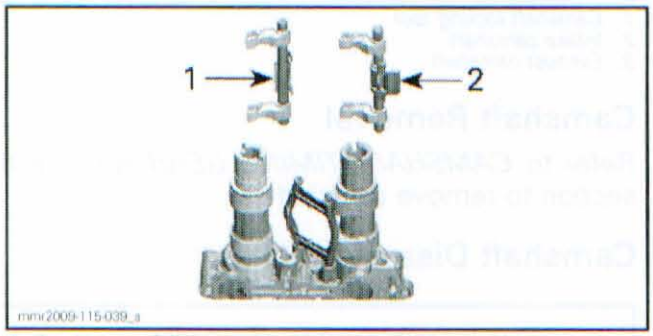

1. Intake cam follower with shaft and spacer
2. Exhaust cam follower with shaft and spacer

3. Remove oil supply tube.

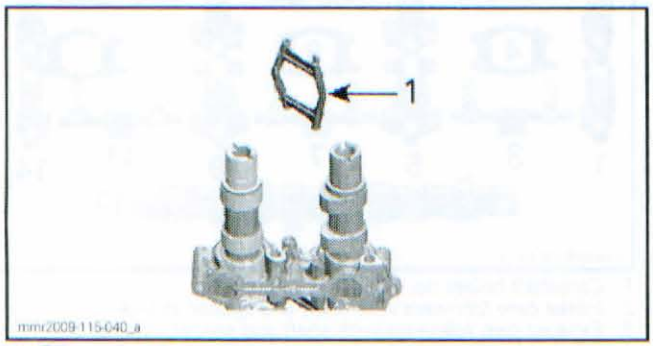

1. Oil supply tube

4. Turn camshafts to clear lobes from camshaft holder no. 2. Remove holder.

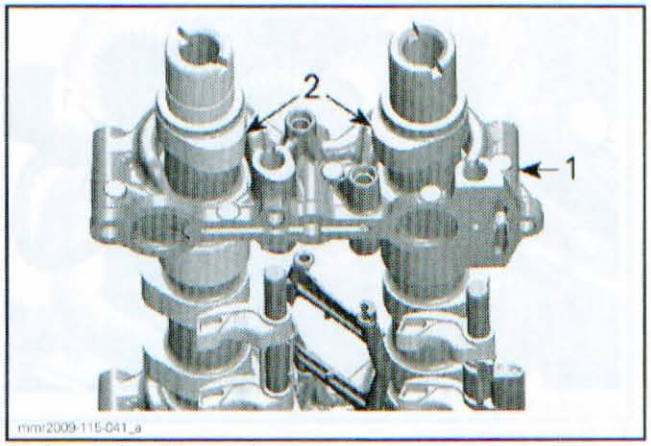

1. Camshaft holder no. 2
2. Camshaft lobes

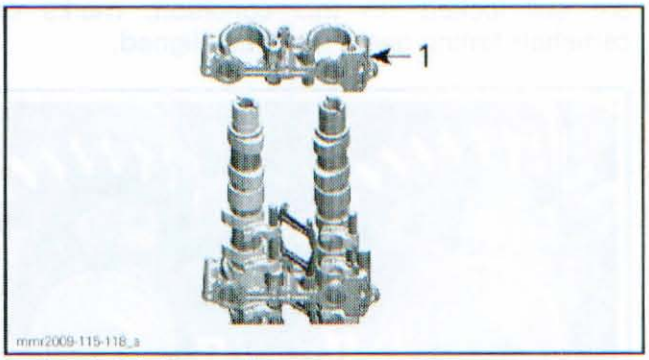

1. Camshaft holder no. 2

5. Remove intake and exhaust cam followers of cylinder no. 2 with their shaft and spacer.

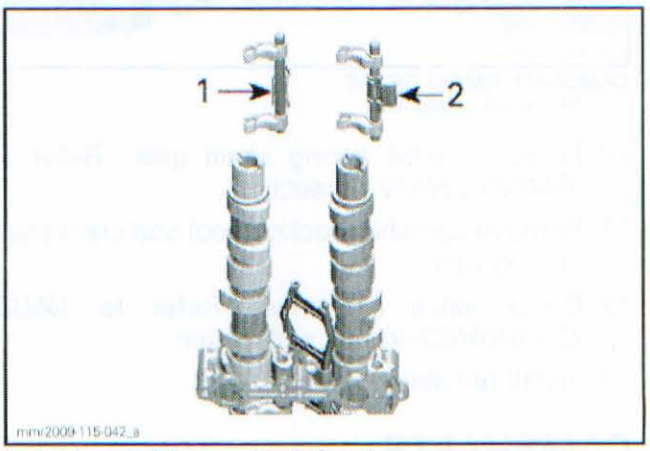

1. Intake cam follower with shaft and spacer
2. Exhaust cam follower with shaft and spacer

6. Remove oil supply tube.

www.midwestmanuals.com

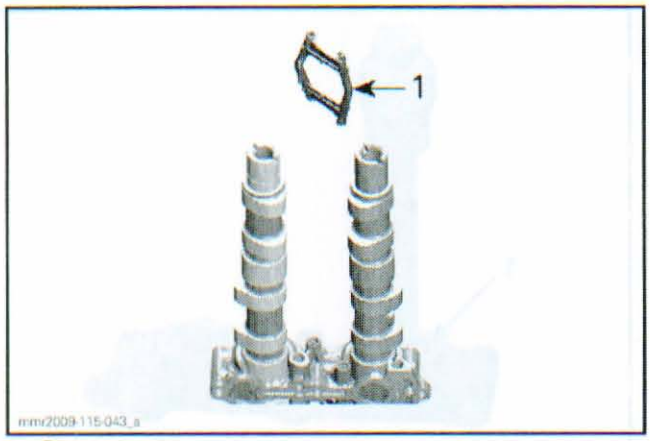

1. Oil supply tube

7. Turn camshafts to clear lobes from camshaft holder no. 3. Remove holder.

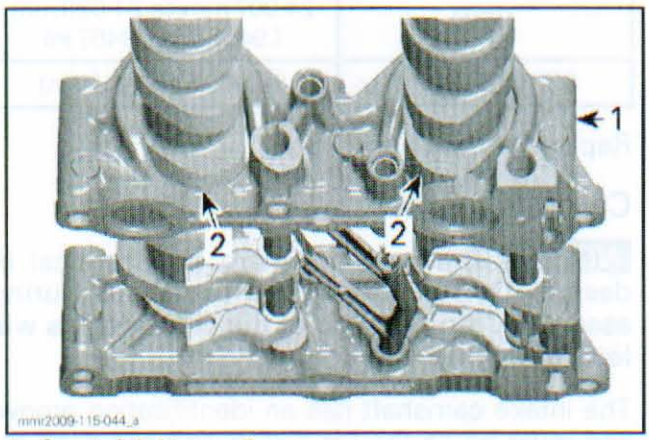

1. Camshaft holder no. 3
2. Camshaft lobes

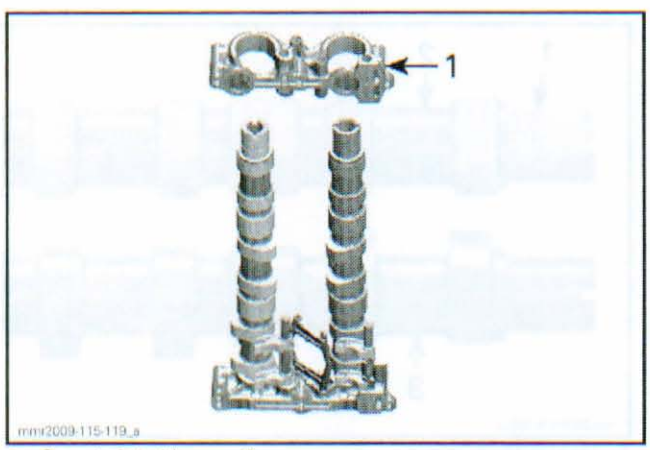

1. Camshaft holder no. 3

8. Remove intake and exhaust cam followers of cylinder no. 1 with their shaft and spacer.

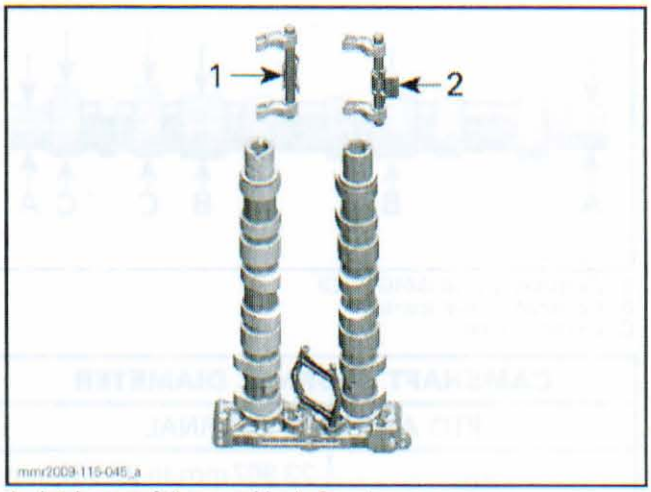

1. Intake cam follower with shaft and spacer
2. Exhaust cam follower with shaft and spacer

9. Remove intake and exhaust camshafts.

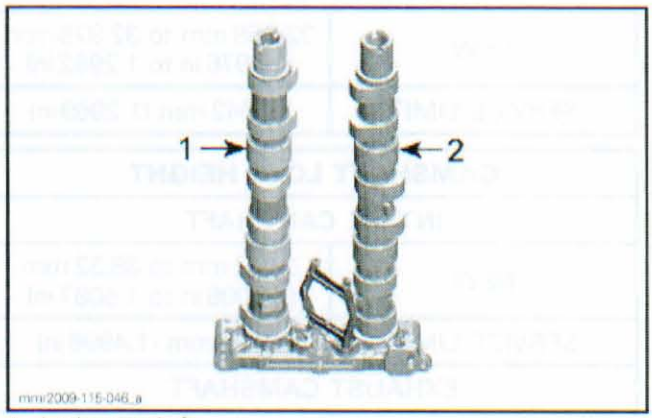

1. Intake camshaft
2. Exhaust camshaft

NOTE: Place all components in their original assembly order on a clean rag, to ease reassembly.

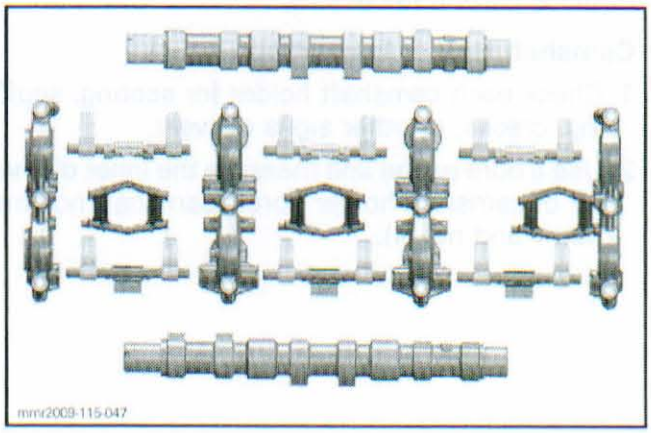

Camshaft Inspection

1. Check each lobe and bearing journal for scoring, scuffing, cracks, or other signs of wear.
2. Measure camshaft bearing journal diameter and lobe height, using a micrometer.

www.midwestmanuals.com

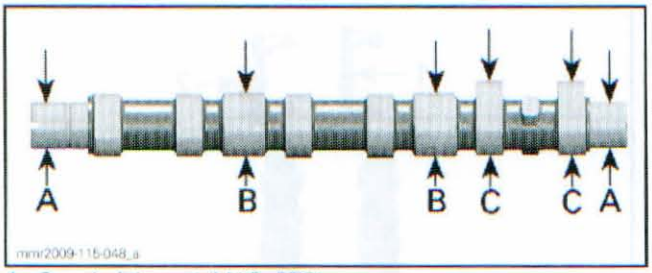

A. Camshaft journal (MAG, PTO)
B. Camshaft journal (center)
C. Camshaft lobe

CAMSHAFT JOURNAL DIAMETER	
PTO AND MAG JOURNAL	
NEW	23.967 mm to 23.980 mm (.9436 in to .9441 in)
SERVICE LIMIT	23.950 mm (.9429 in)
CENTER JOURNAL	
NEW	32.959 mm to 32.975 mm (1.2976 in to 1.2982 in)
SERVICE LIMIT	32.942 mm (1.2969 in)

CAMSHAFT LOBE HEIGHT	
INTAKE CAMSHAFT	
NEW	38.12 mm to 38.32 mm (1.5008 in to 1.5087 in)
SERVICE LIMIT	38.09 mm (1.4996 in)
EXHAUST CAMSHAFT	
NEW	37.86 mm to 38.06 mm (1.4906 in to 1.4984 in)
SERVICE LIMIT	37.83 mm (1.4894 in)

Replace parts if necessary.

Camshaft Holder Inspection

1. Check each camshaft holder for scoring, scuffing, cracks, or other signs of wear.
2. Use a bore gauge and measure the inner diameter of camshaft holder bores (camshaft holders no. 1 and no. 4).

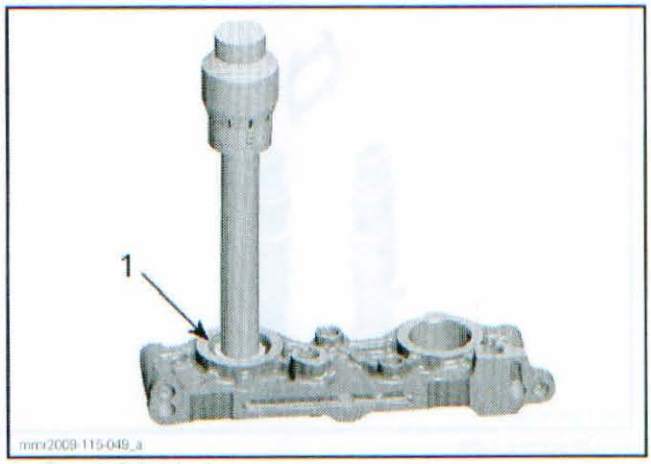

1. Camshaft holder bore

INNER BORE DIAMETER (CAMSHAFT HOLDER)	
NEW	24.007 mm to 24.020 mm (.9452 in to .9457 in)
SERVICE LIMIT	24.070 mm (.9476 in)

Replace parts if necessary.

Camshaft Assembly

NOTICE **The camshafts are not identical in design. Do not mix-up the camshafts during assembly. Any mix-up of the components will lead to engine damage.**

The intake camshaft has an identification groove and must be on the LH side during camshaft assembly.

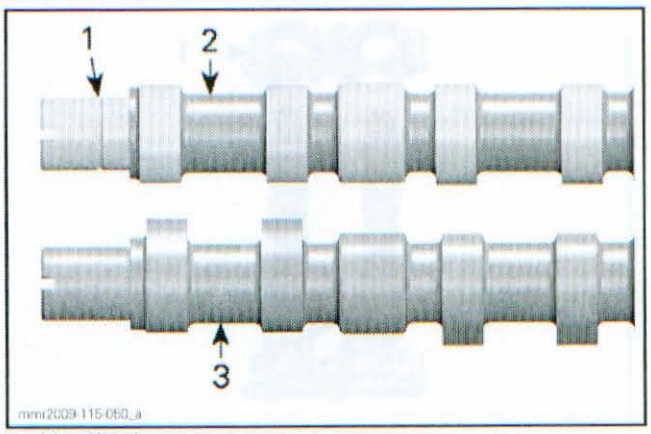

1. Identification groove
2. Intake camshaft
3. Exhaust camshaft

The assembly is the reverse of the disassembly procedure. However, pay attention to the following.

www.midwestmanuals.com

NOTICE During assembly, make sure to fit the components exactly in their original position on their respective cylinder. Any inversion of the components may cause damage to the engine.

1. Apply KLÜEBER PASTE 46 MR 401 (P/N 420 297 616) on camshaft holder bores during assembly.

NOTICE Do not use other lubricant. Camshaft seizure can happen if another lubricant is used.

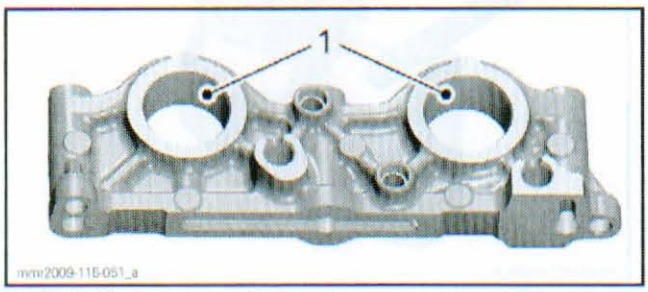

1. Apply Klueber grease here

2. Ensure that the flat spot of oil supply tube tab faces to intake camshaft.

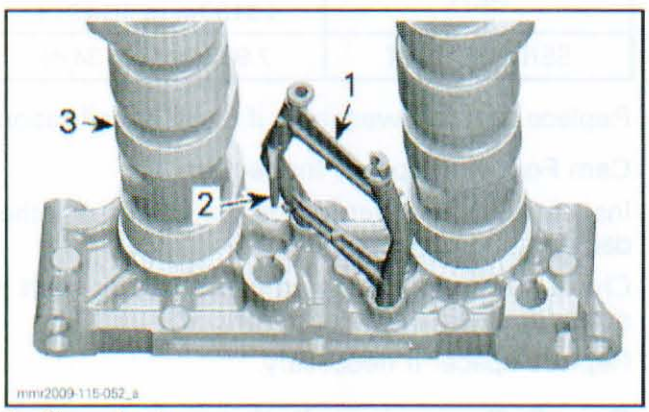

1. Oil supply tube
2. Flat side of tab
3. Intake camshaft

3. Properly reinstall cam follower with its shaft and spacer into camshaft holders as follows.

   3.1 Fit the cam followers as next illustration.

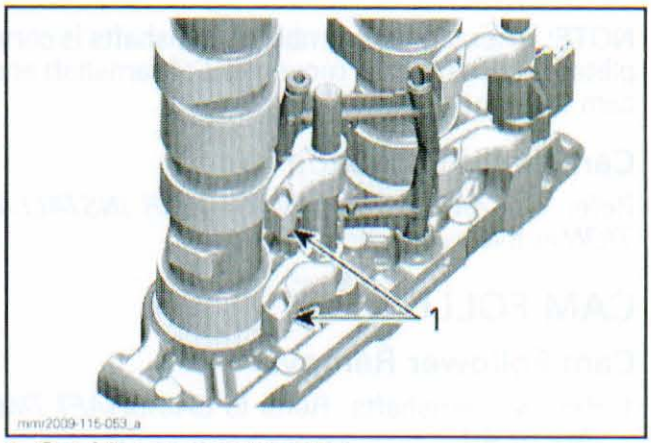

1. Cam followers properly installed

NOTE: Do not mix-up cam follower spacers of intake and exhaust camshaft. Intake spacers are black and exhaust spacers are white colored.

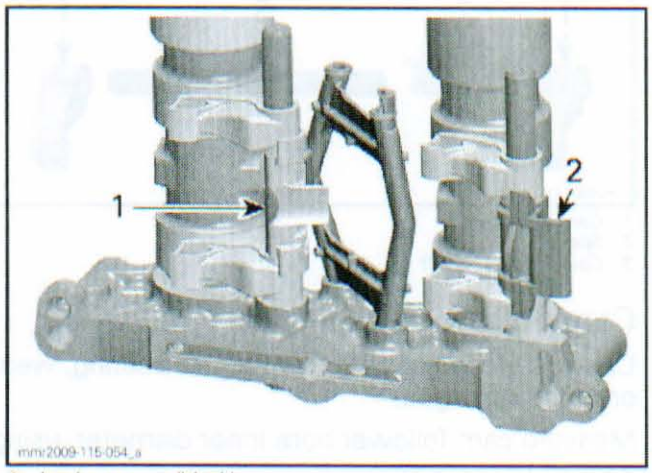

1. Intake spacer (black)
2. Exhaust spacer (white)

   3.2 Ensure that the flat spot of intake spacer (black) contacts the flat spot of oil tube, see next illustration.

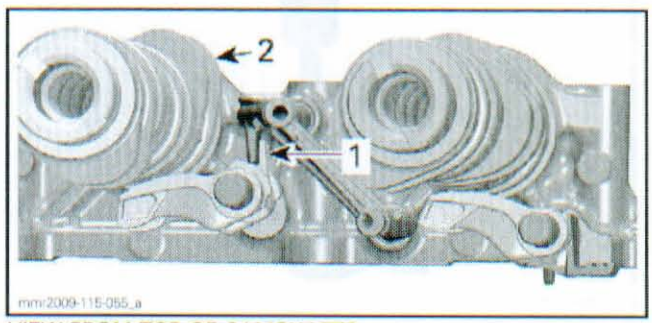

VIEW FROM TOP OF CAMSHAFTS
1. Exhaust spacer properly installed
2. Intake camshaft

4. Properly fit camshaft holders onto oil supply tubes during assembly.

www.midwestmanuals.com

NOTE: After the reassembly of camshafts is completed, check for easy movement of camshaft and cam followers.

Camshaft Installation

Refer to *CAMSHAFT TIMING GEAR INSTALLATION* in this subsection.

CAM FOLLOWERS

Cam Follower Removal

1. Remove camshafts. Refer to *CAMSHAFT TIMING GEAR.*
2. Disassemble camshafts. Refer to *CAMSHAFT.*
3. Remove cam followers and spacer from cam follower shaft.

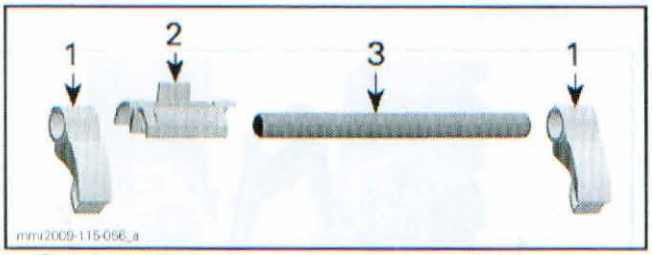

1. *Cam followers*
2. *Spacer*
3. *Cam follower shaft*

Cam Follower Inspection

Check surfaces of cam follower for scoring, wear or other damages.

Measure cam follower bore inner diameter, using a small bore gauge.



1. *Cam follower bore*

CAM FOLLOWER BORE INNER DIAMETER	
NEW	8.013 mm to 8.049 mm (.3155 in to .3169 in)
SERVICE LIMIT	8.060 mm (.3173 in)

Replace cam follower, if out of specification.

Cam Follower Shaft Inspection

Check cam follower shaft for scoring, wear or other damages.

Measure cam follower shaft diameter, using a micrometer.

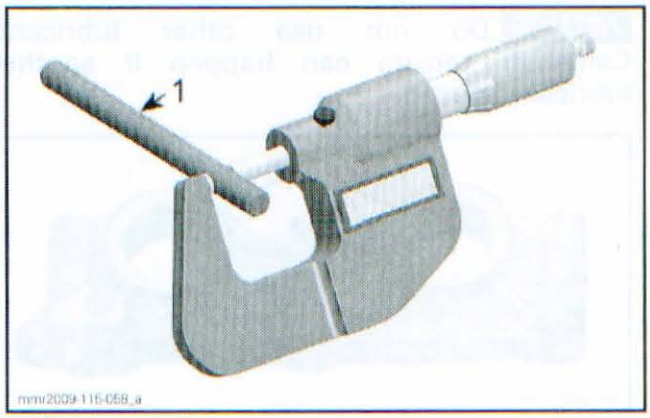

1. *Cam follower shaft*

CAM FOLLOWER SHAFT DIAMETER	
NEW	7.972 mm to 7.980 mm (.3139 in to .3142 in)
SERVICE LIMIT	7.960 mm (.3134 in)

Replace cam follower shaft, if out of specification.

Cam Follower Spacer Inspection

Inspect cam follower spacer for cracks or other damage.

Check if clamping force on cam follower shaft is still adequate.

Replace spacer if necessary.

Cam Follower Installation

Refer to *CAMSHAFT* assembly steps in this section.

CYLINDER HEAD

Cylinder Head Removal

1. Remove engine from vehicle. Refer to *ENGINE REMOVAL AND INSTALLATION* subsection.
2. Remove the intake manifold. Refer to *AIR INTAKE SYSTEM* subsection.
3. Remove oil tank from engine. Refer to *LUBRICATION SYSTEM* subsection.
4. Remove screws securing the thermostat to engine. Move thermostat aside.

www.midwestmanuals.com

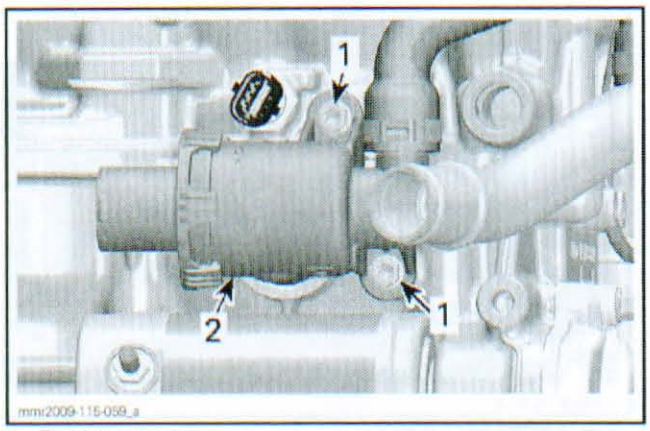

1. *Retaining screws*
2. *Thermostat*

5. Remove the *CAMSHAFT TIMING GEARS*, see procedure in this subsection.
6. Remove valve adjustment shims from spring retainers.

NOTE: Identify the position of each valve adjustment shim very carefully, so it can be reinstalled in its original place.

7. Remove M6 cylinder head screws.

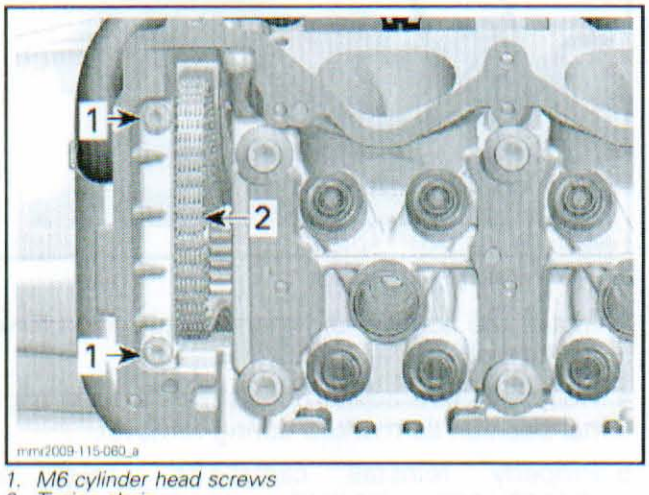

1. *M6 cylinder head screws*
2. *Timing chain*

8. Remove and discard M10 cylinder head screws.

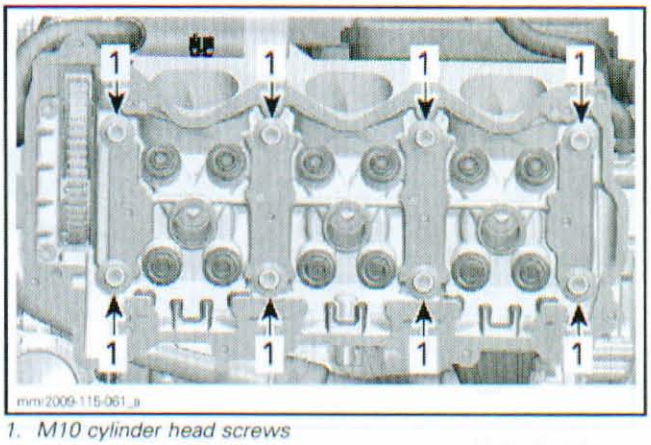

1. *M10 cylinder head screws*

9. Pull up cylinder head.
10. Remove and discard cylinder head gasket.

Cylinder Head Cleaning

1. Remove carbon deposits from combustion chamber, exhaust port and piston top.
2. Clean cylinder head, especially cylinder head screw surface from oil spillage.
3. Blow out the oil orifices and check if they are not clogged.

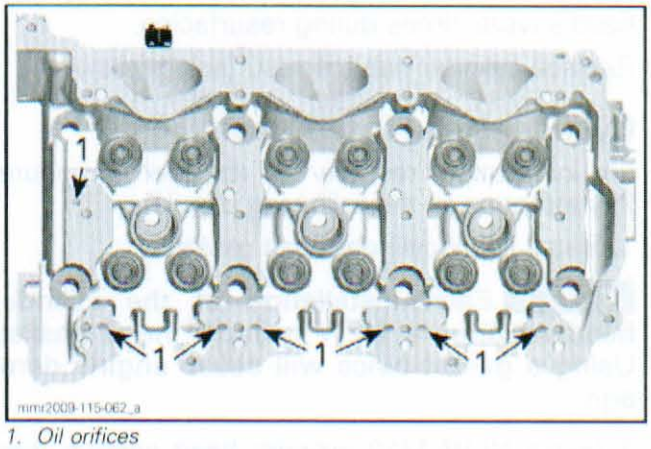

1. *Oil orifices*

Cylinder Head Inspection

1. Check for cracks between valve seats or other damages, if so, replace cylinder head.
2. Check cylinder head mating surface for flatness using a straight edge.

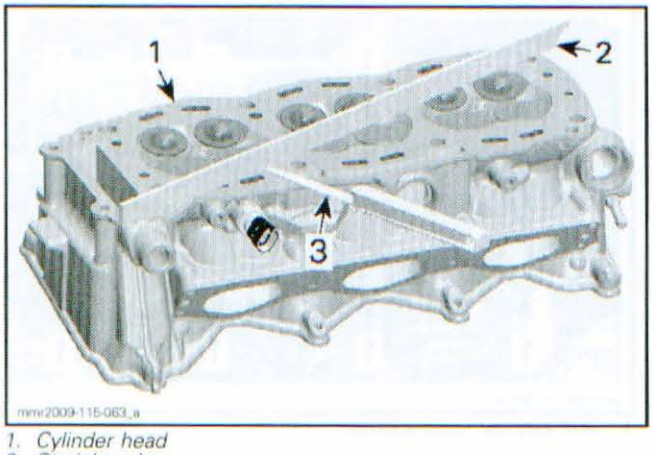

1. *Cylinder head*
2. *Straight edge*
3. *Feeler gauge*

Check cylinder head warpage.

CYLINDER HEAD WARPAGE	
Maximum	0.10 mm (.0039 in)

If warpage exceeds specification, resurface the cylinder head as follows.

Use a 400 - 600 grit wet sandpaper on a surface plate and gently grind off the mating surface.

NOTE: To ensure an even surface, rotate cylinder head several times during resurfacing.

Replace cylinder head, if resurfacing fails.

Cylinder Head Installation

For installation, reverse the removal procedure. Pay attention to the following details.

1. Install **NEW** cylinder head gasket.

NOTICE **Each installation of the cylinder head requires a NEW cylinder head gasket. Using a gasket twice will cause engine damage.**

2. Install **NEW** M10 cylinder head screws, proceed as follows.

   NOTICE **For this assembly, stretch screws are used. As the screws have been stretched from the previous installation, it is very important to use NEW screws at assembly. Failure to replace screws and to strictly follow the torque procedure may cause screws to loosen and lead to engine damage.**

   2.1 Apply engine oil on screw threads and under screw head.

   2.2 First torque M10 screws to 30 N•m (22 lbf•ft) using the following sequence.

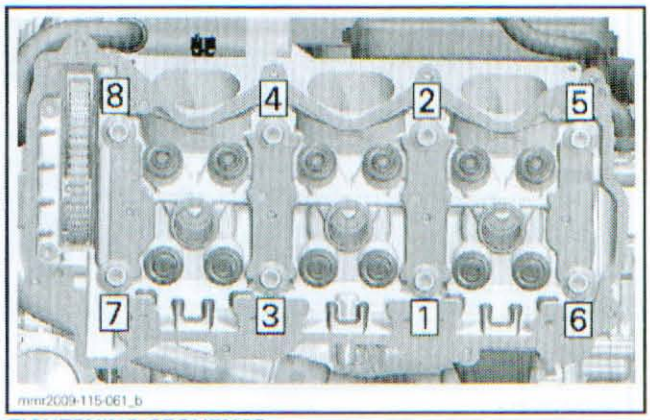

TIGHTENING SEQUENCE

   2.3 Using the same sequence, tighten M10 screws by turning a 90° rotation with a torque angle gauge.

   2.4 Finally tighten M10 screws by another 90° turn using an angle torque wrench.

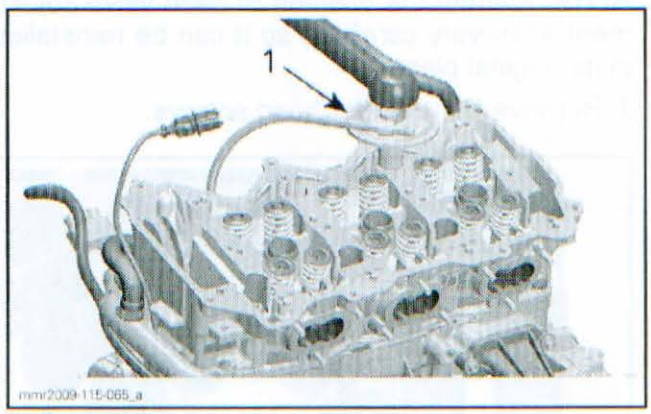

1. *Torque angle gauge*

3. Install M6 screws and them torque to 11 N•m (97 lbf•**in**).
4. Reinstall valve adjustment shims in their original position as marked during removal.
5. Properly reinstall camshafts, refer to *CAMSHAFT TIMING GEAR INSTALLATION.*

VALVE SPRINGS

Valve Spring Removal

1. Remove *CYLINDER HEAD*, see procedure in this subsection.
2. Compress valve spring, using the VALVE SPRING COMPRESSOR (P/N 529 035 724) and the VALVE SPRING COMPRESSOR CUP (P/N 529 036 161).

www.midwestmanuals.com

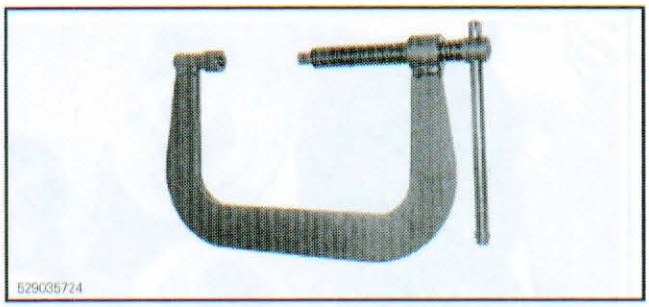

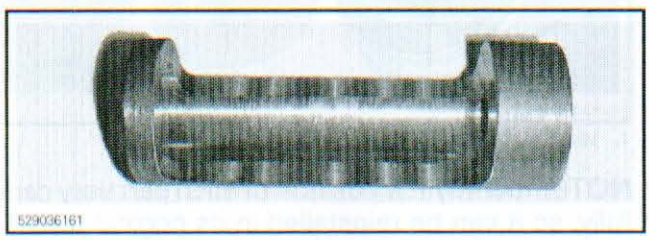

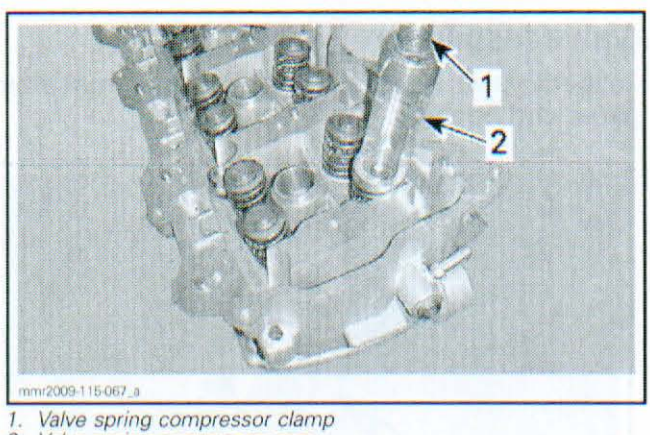

1. *Valve spring compressor clamp*
2. *Valve spring compressor cup*

3. Remove valve cotters.
4. Withdraw valve spring compressor tools.
5. Remove valve spring retainer and valve spring.

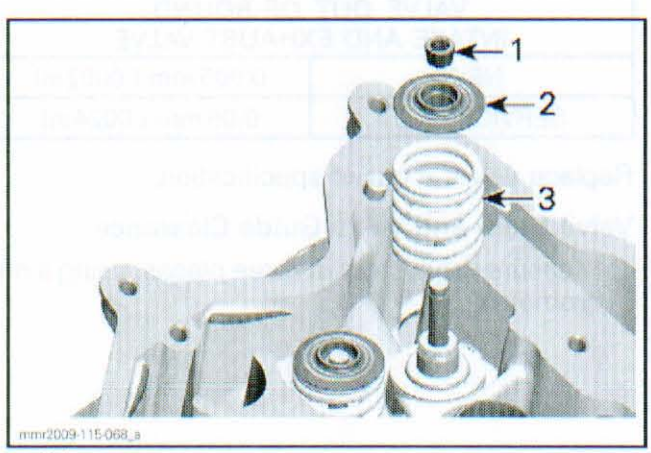

1. *Valve cotters*
2. *Valve spring retainer*
3. *Valve spring*

NOTE: Identify the position of each part very carefully, so it can be reinstalled in its original place.

Valve Spring Inspection

1. Check valve spring for rust, corrosion or other visible damages.
2. Check valve spring free length and straightness.

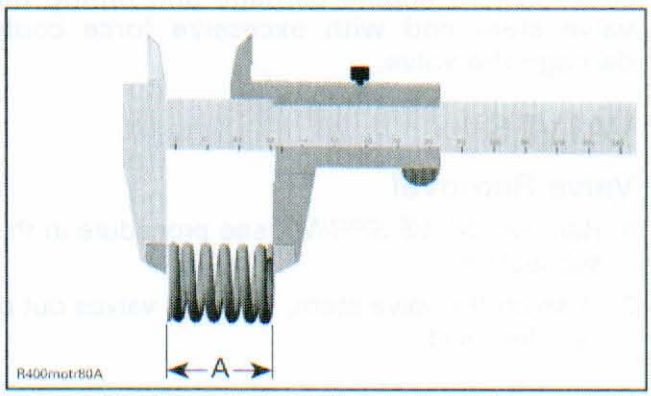

A. Spring free length

VALVE SPRING FREE LENGTH	
NEW	36.7 mm (1.4449 in)
SERVICE LIMIT	35.5 mm (1.3976 in)

Replace valve spring, if out of specification.

Valve Spring Installation

For installation, reverse the removal procedure. Pay attention to the following details.

NOTE: Ensure to reinstall all parts in their original position as marked during removal.

1. Apply some grease on valve cotters, so that they remain in place while releasing the valve spring.
2. Make sure valve cotters are properly engaged into valve stem groove.

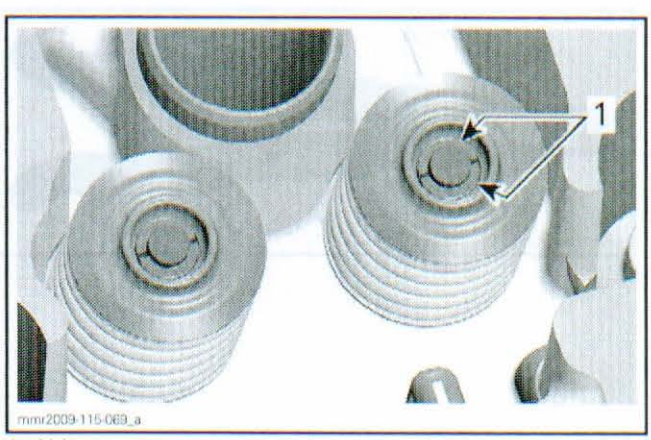

1. *Valve cotters*

www.midwestmanuals.com

3. After spring is installed, ensure it is properly locked by lightly tapping on valve stem end with a soft hammer so that valve opens and closes a few times.

NOTICE **Improperly locked valve spring will cause severe engine damage and hitting the valve stem end with excessive force could damage the valve.**

VALVES

Valve Removal

1. Remove *VALVE SPRING*, see procedure in this subsection.
2. Push on the valve stem, then pull valves out of cylinder head.

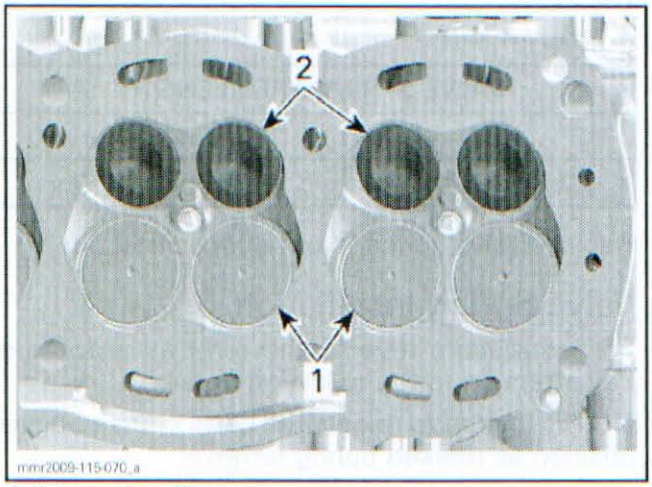

1. *Intake valves 37 mm*
2. *Exhaust valves 31 mm*

3. Remove and discard valve stem seal with special pliers such as the SNAP-ON VALVE STEM SEAL PLIERS (P/N YA 8230).

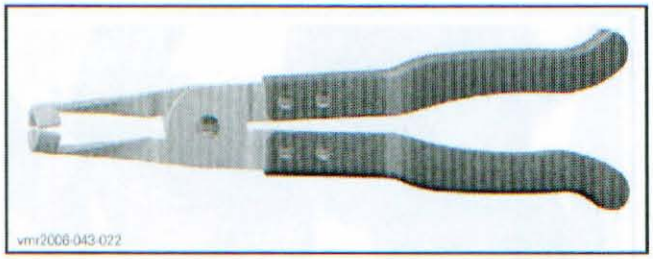

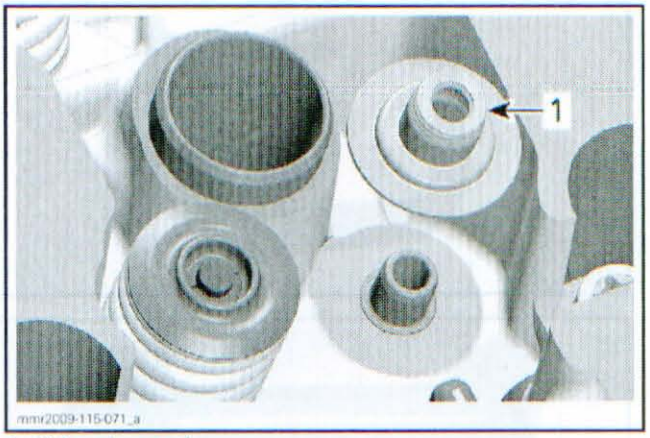

1. *Valve stem seal*

NOTE: Identify the position of each part very carefully, so it can be reinstalled in its original place.

Valve Inspection

Inspect valve surface, check for abnormal stem wear and bending.

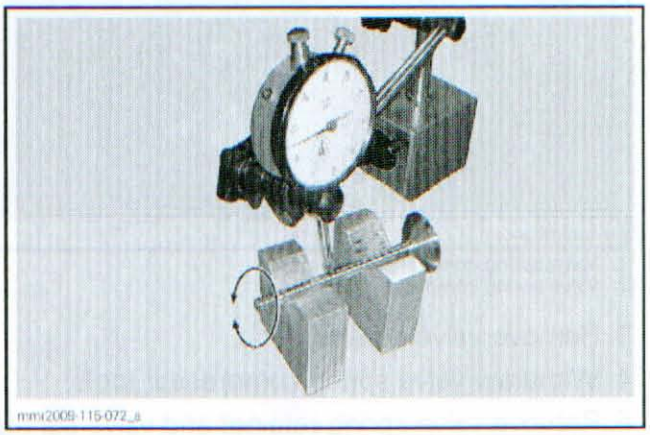

VALVE OUT OF ROUND INTAKE AND EXHAUST VALVE	
NEW	0.005 mm (.0002 in)
SERVICE LIMIT	0.06 mm (.0024 in)

Replace valve, if out of specification.

Valve Stem and Valve Guide Clearance

1. Measure valve stem at three places, using a micrometer.

www.midwestmanuals.com

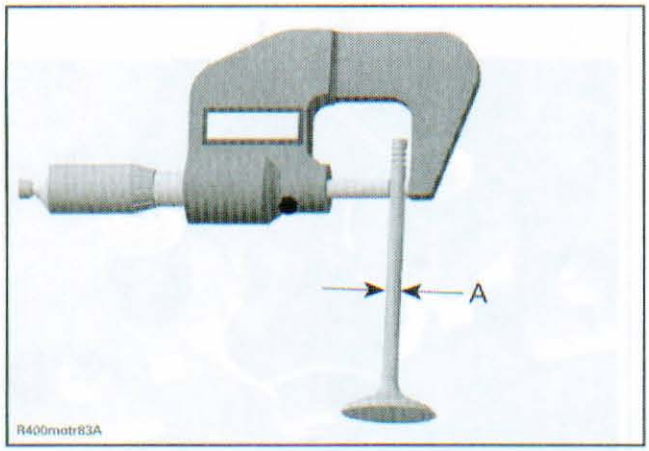

A. Valves stem diameter

VALVE STEM DIAMETER	
INTAKE VALVE	
NEW	5.471 mm to 5.486 mm (.2154 in to .216 in)
SERVICE LIMIT	5.450 mm (.2146 in)
EXHAUST VALVE	
NEW	5.461 mm to 5.476 mm (.215 in to .2156 in)
SERVICE LIMIT	5.440 mm (.2142 in)

Replace valve, if valve stem is out of specification or has other damages such as wear or friction surface.

2. Measure valve guide inner diameter, using a small bore gauge.

NOTE: Clean valve guide from carbon deposits before measuring.

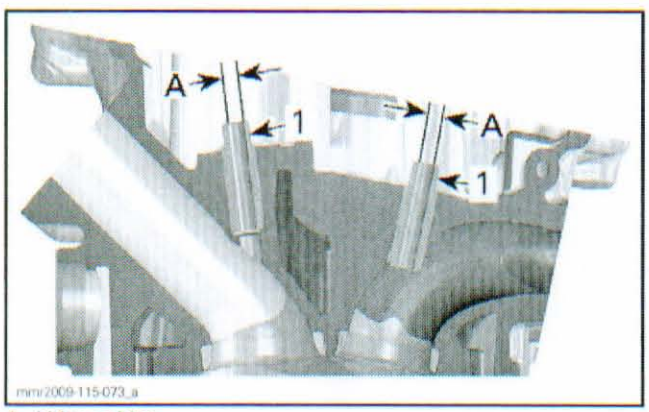

1. Valve guides
A. Valve guide inner diameter

VALVE GUIDE INNER DIAMETER	
NEW	5.505 mm to 5.518 mm (.2167 in to .2172 in)
SERVICE LIMIT	5.568 mm (.2192 in)

Replace cylinder head, if valve guide is out of specification.

Valve Face and Seat

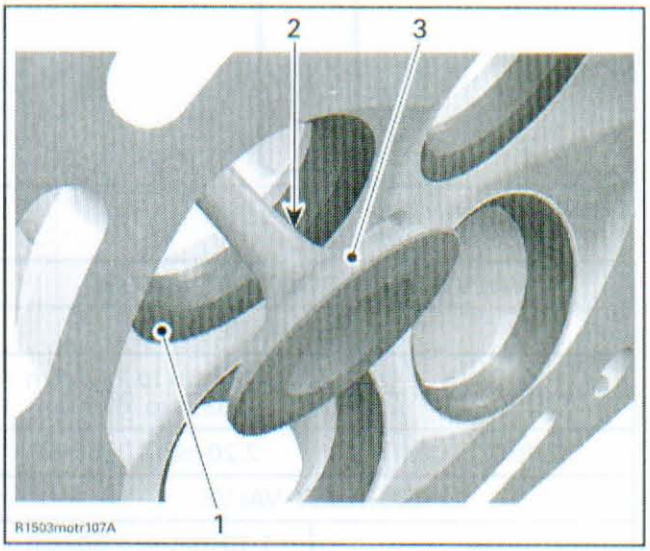

TYPICAL
1. Valve seat
2. Exhaust valve contaminated area
3. Valve face (contact surface to valve seat)

1. Check valve face and seat for burning, pitting and other signs of damage.
2. Check if valve seats properly in cylinder head. Proceed as follows.
   2.1 Apply some lapping compound on valve face and work valve on its seat with a lapping tool such as the SNAP-ON VALVE HOLDER (P/N VL2).

   NOTE: The location of contact area should be in center of valve face.

   2.2 Repeat procedure until valve seat and valve face fit together.
3. Measure valve seat contact width, using a caliper.

www.midwestmanuals.com

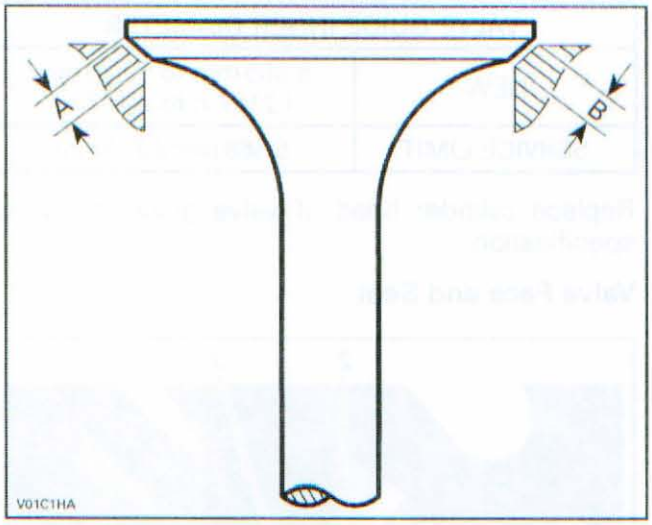

A. Valve face contact width
B. Valve seat contact width

VALVE SEAT CONTACT WIDTH	
INTAKE VALVE	
NEW	1.60 mm to 1.80 mm (.063 in to .0709 in)
SERVICE LIMIT	2.20 mm (.0866 in)
EXHAUST VALVE	
NEW	1.40 mm to 1.80 mm (.0551 in to .0709 in)
SERVICE LIMIT	2.40 mm (.0945 in)

Replace parts if out of specification.

Valve Installation

For installation reverse the removal procedure. Pay attention to the following details.

NOTE: Ensure to reinstall all parts in their original position as marked during removal.

1. Install a **NEW** valve stem seal whenever valve is removed.
2. Apply engine oil on valve stem and carefully slide through cylinder head and valve stem seal.

NOTICE **Be careful when valve stem is passed through sealing lip of valve stem seal.**

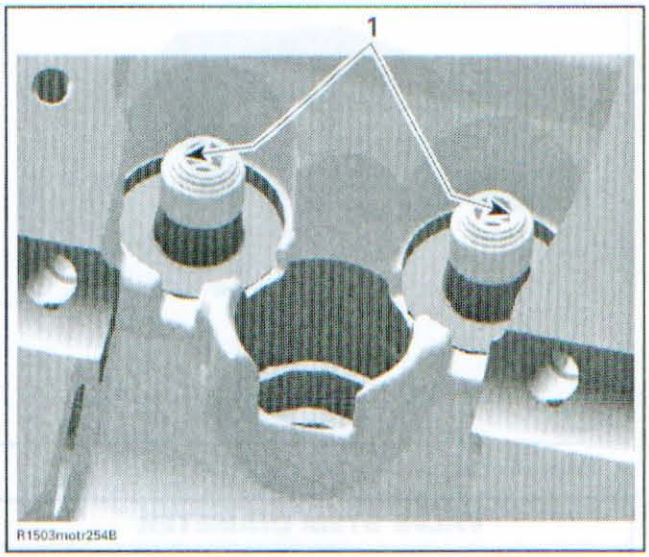

TYPICAL
1. Sealing lips of valve stem seal

3. Install *VALVE SPRING*. See procedure in this subsection.
4. Install all other removed parts.

www.midwestmanuals.com

CYLINDER BLOCK

SERVICE TOOLS

Description	Part Number	Page
CRANKSHAFT LOCKING BOLT	529 036 148	141, 144
DIAL INDICATOR ADAPTER	529 036 159	141
OIL SEAL INSTALLER	529 036 155	133
PISTON CIRCLIP INSTALLER	529 036 153	148
PISTON RING COMPRESSOR	529 036 156	149
TDC DIAL INDICATOR	414 104 700	141

SERVICE PRODUCTS

Description	Part Number	Page
LOCTITE 243 (BLUE)	293 800 060	133–134, 140
LOCTITE 5910	293 800 081	139
LOCTITE 767 (ANTISEIZE LUBRICANT)	293 800 070	135
LOCTITE CHISEL (GASKET REMOVER)	413 708 500	137
SUPER LUBE GREASE	293 550 030	133

Midwest Manuals
sales@midwestmanuals.com
www.midwestmanuals.com

www.midwestmanuals.com

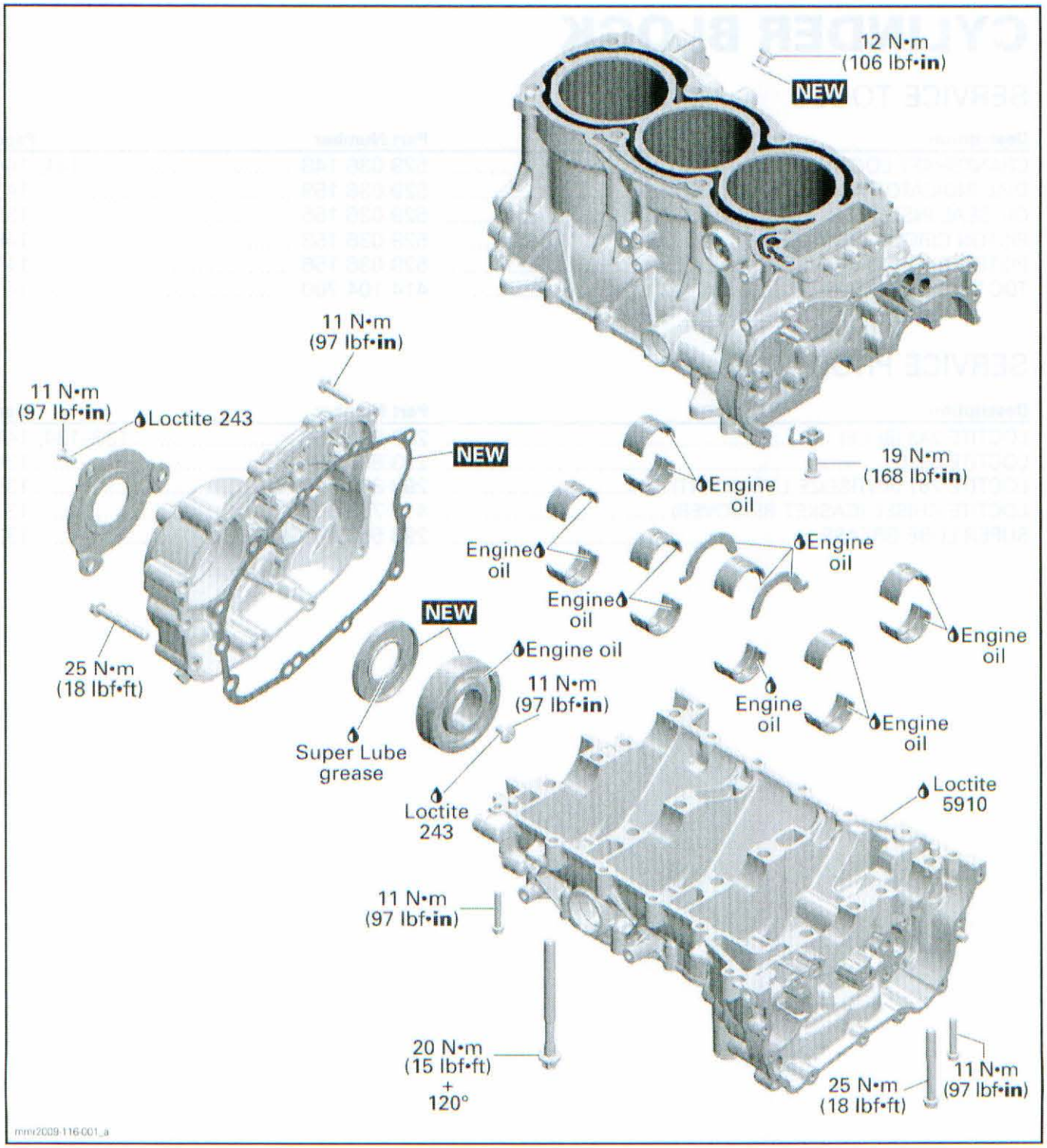

www.midwestmanuals.com

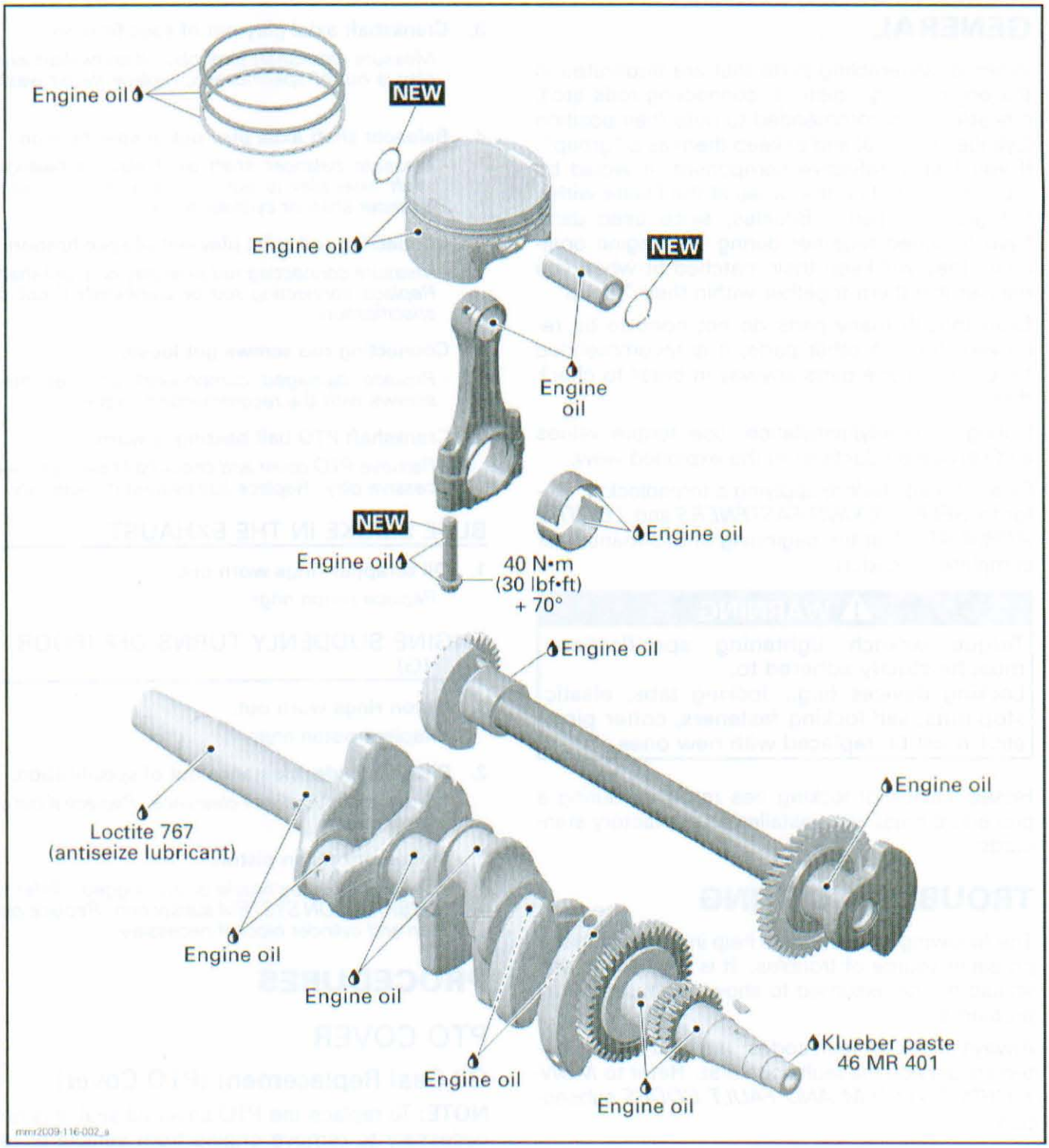

www.midwestmanuals.com

GENERAL

When disassembling parts that are duplicated in the engine, (e.g.: pistons, connecting rods etc.), it is strongly recommended to note their position (cylinder 1, 2 or 3) and to keep them as a "group". If you find a defective component, it would be much easier to find the cause of the failure within the group of parts. Besides, since used parts have matched together during the engine operation, they will keep their matched fit when you reassemble them together within their "group".

Even though many parts do not need to be removed to reach other parts, it is recommended to remove these parts anyway in order to check them.

During assembly/installation, use torque values and service products as in the exploded view.

Clean threads before applying a threadlocker. Refer to *SELF-LOCKING FASTENERS* and *LOCTITE APPLICATION* at the beginning of this manual for complete procedure.

⚠ WARNING

Torque wrench tightening specifications must be strictly adhered to.
Locking devices (e.g.: locking tabs, elastic stop nuts, self-locking fasteners, cotter pins, etc.) must be replaced with new ones.

Hoses, cables or locking ties removed during a procedure must be reinstalled as per factory standards.

TROUBLESHOOTING

The following is provided to help in diagnosing the probable source of troubles. It is a guideline and should not be assumed to show all causes for all problems.

Always check for fault codes. If a fault code is detected, service the fault code first. Refer to *MONITORING SYSTEM AND FAULT CODES* subsection.

UNUSUAL ENGINE NOISE OR VIBRATIONS

1. Heavy wear on plain bearings.
   - *Check radial play of plain bearings. Replace if out of specification.*
2. Crankshaft and balancer shaft are not properly aligned.
   - *Disassemble cylinder block and check if marks are properly aligned.*
3. Crankshaft axial play out of specification.
   - *Measure crankshaft axial play. If crankshaft axial play is out of specification, replace thrust washers.*
4. Balancer shaft axial play out of specification.
   - *Measure balancer shaft axial play. If balancer shaft axial play is out of specification, replace balancer shaft or cylinder block.*
5. Connecting rod axial play out of specification.
   - *Measure connecting rod axial play on crankshaft. Replace connecting rod or crankshaft if out of specification.*
6. Connecting rod screws got loose.
   - *Replace damaged components and retighten screws with the recommended torque.*
7. Crankshaft PTO ball bearing is worn.
   - *Remove PTO cover and check ball bearing for excessive play. Replace ball bearing if necessary.*

BLUE SMOKE IN THE EXHAUST

1. Oil scrapper rings worn out.
   - *Replace piston rings.*

ENGINE SUDDENLY TURNS OFF (POOR IDLING)

1. Piston rings worn out.
   - *Replace piston rings.*
2. Piston/cylinder clearance out of specification.
   - *Check piston/cylinder clearance. Replace if out of specification.*
3. Melted or broken piston.
   - *Check if oil spray nozzle is not clogged. Refer to LUBRICATION SYSTEM subsection. Replace piston and cylinder block if necessary.*

PROCEDURES

PTO COVER

Oil Seal Replacement (PTO Cover)

NOTE: To replace the PTO cover oil seal, it is not necessary to remove engine from vehicle or remove PTO cover from the engine.

Oil Seal Removal

1. Remove drive pulley. Refer to *DRIVE PULLEY* subsection.
2. Unscrew and remove oil seal retainer.

www.midwestmanuals.com

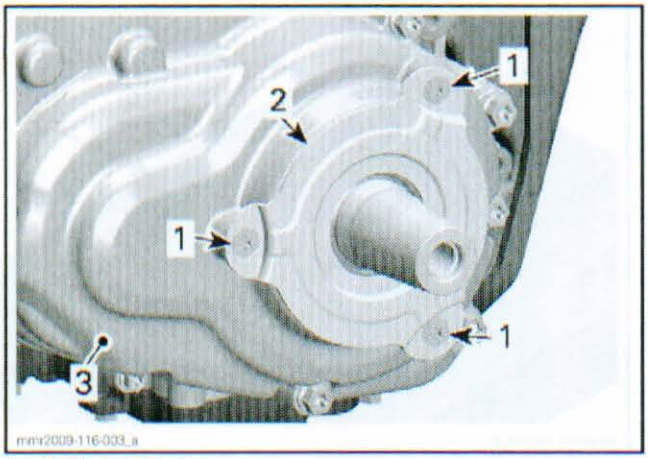

1. *Retaining screws*
2. *Oil seal retainer*
3. *PTO cover*

3. Remove PTO oil seal with a small flat screwdriver.

NOTICE **Avoid scoring surfaces with tool.**

Oil Seal Installation

NOTE: Check the oil seal running surface of crankshaft for grooves, before installation of **NEW** oil seal.

1. Lubricate sealing lip of oil seal with SUPER LUBE GREASE (P/N 293 550 030).

NOTICE **Oil seal must be installed with sealing lip toward the engine.**

2. Push the **NEW** oil seal in place by using the OIL SEAL INSTALLER (P/N 529 036 155).



INSERTION OIL SEAL PTO COVER

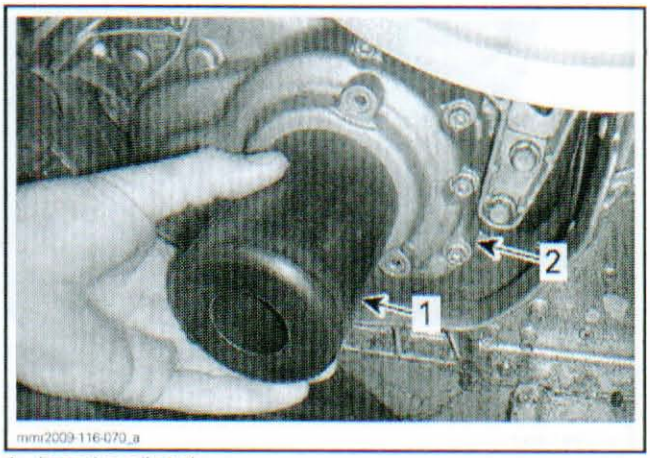

1. *Insertion oil seal*
2. *PTO cover*

3. Apply LOCTITE 243 (BLUE) (P/N 293 800 060) on oil seal retainer screws and torque them to 11 N•m (97 lbf•**in**).

PTO Cover Removal

1. Remove engine from vehicle. Refer to *ENGINE REMOVAL AND INSTALLATION* subsection.
2. Drain engine oil, refer to *LUBRICATION SYSTEM* subsection.
3. Unscrew and remove PTO cover screws.

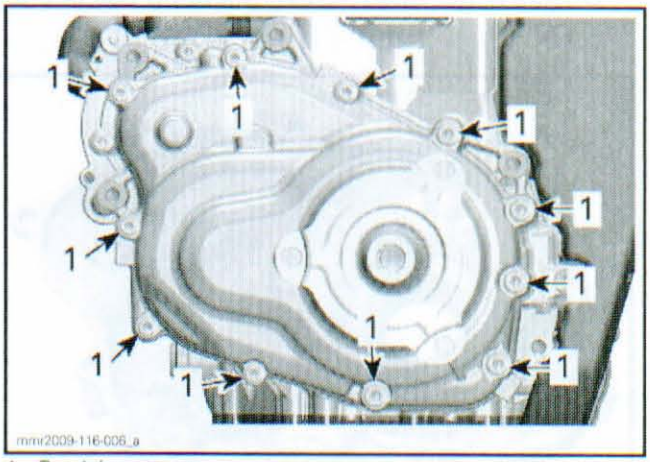

1. *Retaining screws*

4. Remove PTO cover by using a soft hammer.

www.midwestmanuals.com

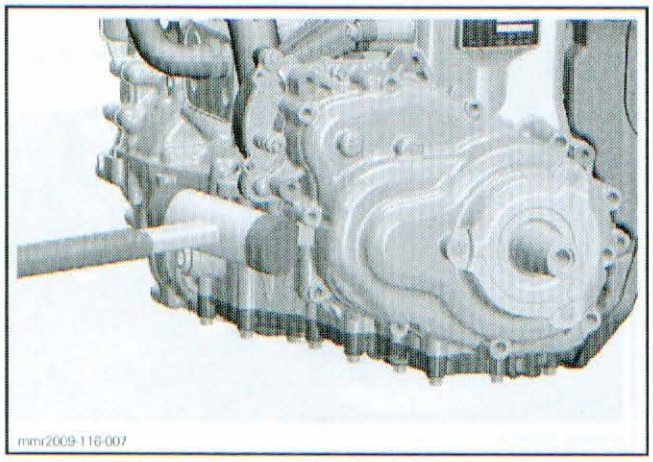

PTO Cover Inspection

Check the PTO cover for cracks or other damages.

Check the sealing surface for flatness using a straight edge.

Inspect ball bearing for excessive play and smooth operation.

Replace damaged parts.

Bearing Replacement (PTO Cover)

Bearing Removal

1. Unscrew flat head screw, securing ball bearing in place.

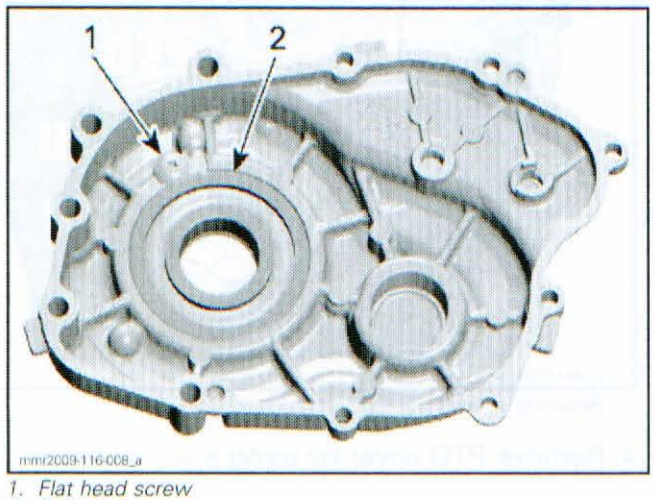

1. Flat head screw
2. Ball bearing

2. Remove oil seal retainer and oil seal, see *OIL SEAL REPLACEMENT (PTO COVER)* in this subsection.
3. Push-out the ball bearing from the outside towards the inside by using a suitable pusher and a press.

NOTE: The PTO cover has to be supported on a suitable straight surface, in order to prevent damage of the sealing surface.

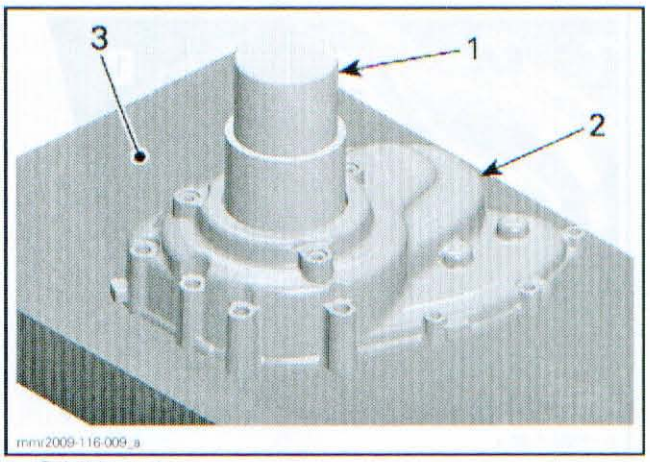

1. Suitable pusher
2. PTO cover
3. Straight support

4. Discard the ball bearing.

Bearing Installation

NOTICE **Never reinstall a ball bearing that has been removed. Unless otherwise instructed, never use a hammer to install ball bearings. Use a press only.**

1. Support the PTO cover with a suitable support underneath the bearing seat.
2. Carefully press-in the **NEW** ball bearing from the inside towards the outside by using a suitable steel tube with an outer diameter of 76 mm (2.992 in).

NOTICE **Never push on the inner race of the bearing, during installation.**

3. Apply LOCTITE 243 (BLUE) (P/N 293 800 060) on flat head screw securing ball bearing and torque screw to 11 N•m (97 lbf•**in**).
4. Reinstall a **NEW** oil seal, refer to *OIL SEAL REPLACEMENT (PTO COVER)* in this subsection.

PTO Cover Installation

1. Install **NEW** PTO cover gasket.
2. Ensure that location pins and water pump intermediate gear are in place, before installing the PTO cover.

www.midwestmanuals.com

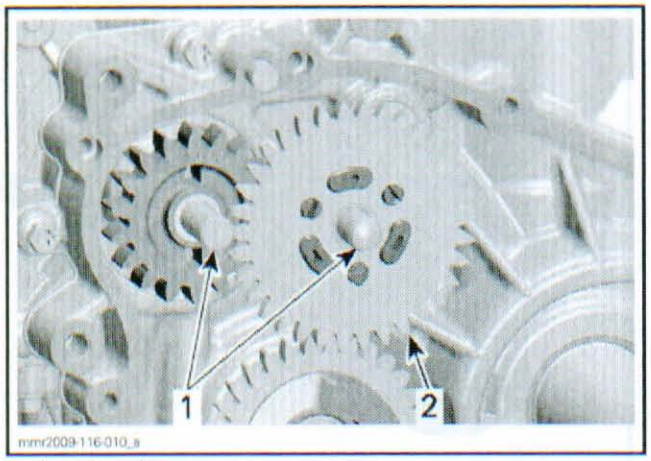

1. *Location pins*
2. *Water pump intermediate gear*

3. Apply LOCTITE 767 (ANTISEIZE LUBRICANT) (P/N 293 800 070) on crankshaft where bearing fits before installing the PTO cover.

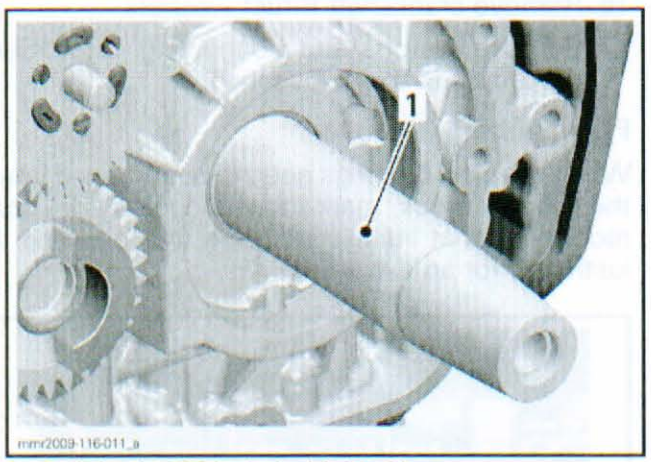

1. *Apply Loctite 767 (antiseize lubricant) here*

4. Tighten PTO cover screws according to the following sequence.

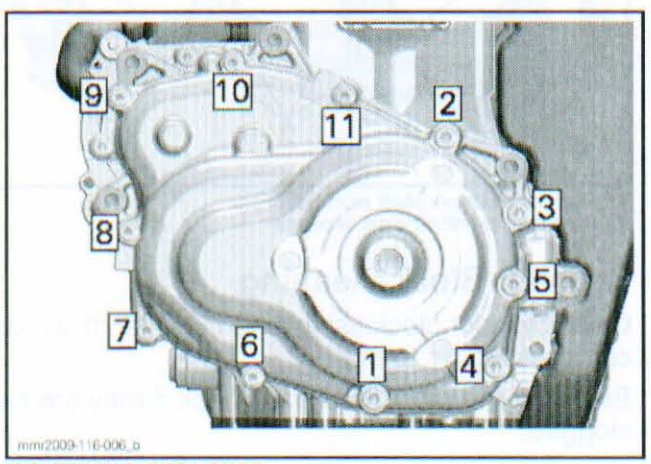

TIGHTENING SEQUENCE

CYLINDER BLOCK

Cylinder Block Disassembly

1. Remove engine from vehicle. Refer to *ENGINE REMOVAL AND INSTALLATION* subsection.
2. Drain engine oil. Refer to *LUBRICATION SYSTEM* subsection.
3. Lock crankshaft, refer to *CRANKSHAFT LOCKING PROCEDURE* in this subsection.
4. Remove air intake manifold. Refer to *AIR INTAKE SYSTEM* subsection.
5. Refer to *COOLING SYSTEM* subsection to remove the following parts:
   - All hoses and clamps
   - Water pump
   - Water pump drive gears.
6. Refer to *LUBRICATION SYSTEM* subsection to remove the following parts:
   - Oil tank
   - Oil cooler
   - Oil pressure regulator
   - Oil pump gears and oil pumps.
7. Refer to *MAGNETO AND STARTER* subsection to remove the following parts:
   - Magneto cover
   - Rotor
   - Starter drive gears
   - Electric starter.
8. Remove timing chain and timing chain guides, refer to *TIMING CHAIN* subsection.
9. Remove cylinder head. Refer to *CYLINDER HEAD* subsection.
10. Remove oil sump cover and oil strainers. Refer to *LUBRICATION SYSTEM* subsection.

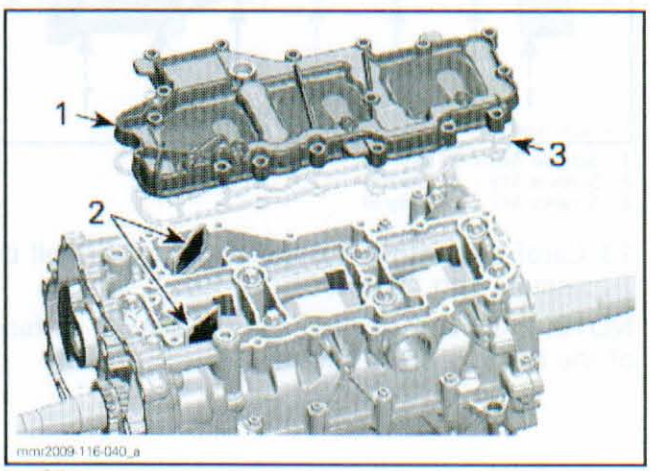

1. *Oil sump cover*
2. *Engine oil strainers*
3. *Gasket*

www.midwestmanuals.com

11. Remove plug screw to get access to M8 cylinder block screw.

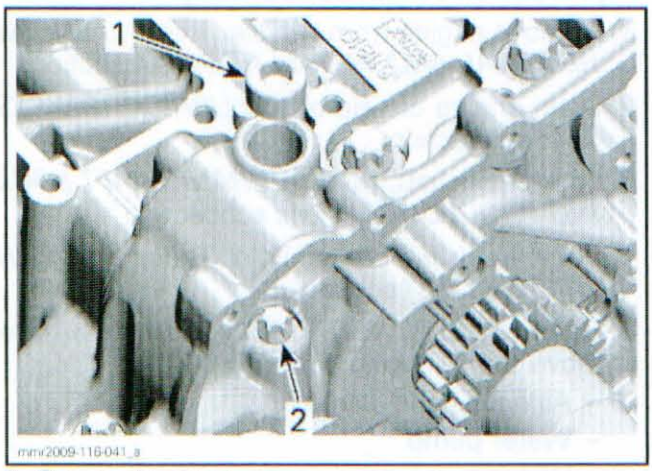

1. *Remove plug screw*
2. *M8 cylinder block screw*

NOTE: Before splitting the cylinder block, measure crankshaft and balancer shaft axial play. Refer to *CRANKSHAFT* and *BALANCER SHAFT* in this subsection.

12. Remove cylinder block screws.

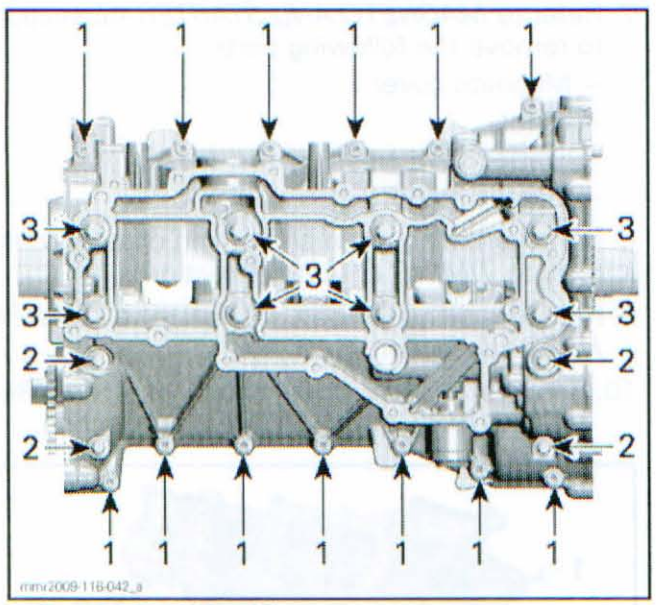

1. *Screws M6 x 30 (qty 13)*
2. *Screws M8 x 70 (qty 4)*
3. *Screws M9 x 113 (qty 8)*

13. Carefully remove cylinder block lower half by using a soft hammer.

NOTE: Ensure not to damage the sealing surface of the cylinder block halves.

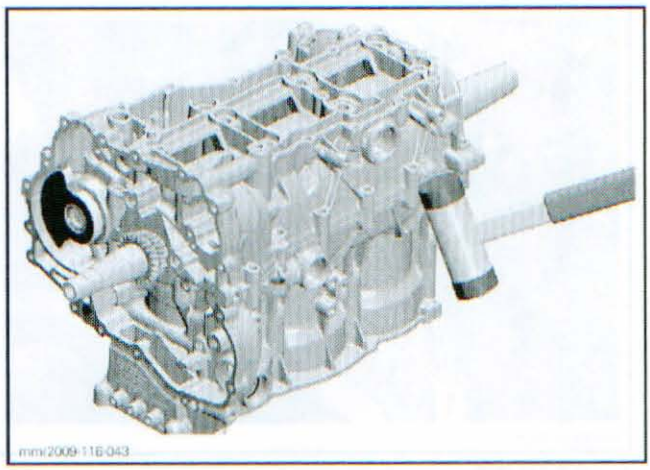

14. Remove connecting rod caps. Refer to *PISTONS AND CONNECTING RODS*.
15. Remove balancer shaft and crankshaft. See procedure in this subsection.
16. Remove crankshaft thrust washers.
17. Remove pistons and connecting rods. See procedure in this subsection.

Plain Bearing Removal

When the plain bearings need to be removed from the cylinder block, mark them to identify the correct position at installation. See the following illustration for an example.

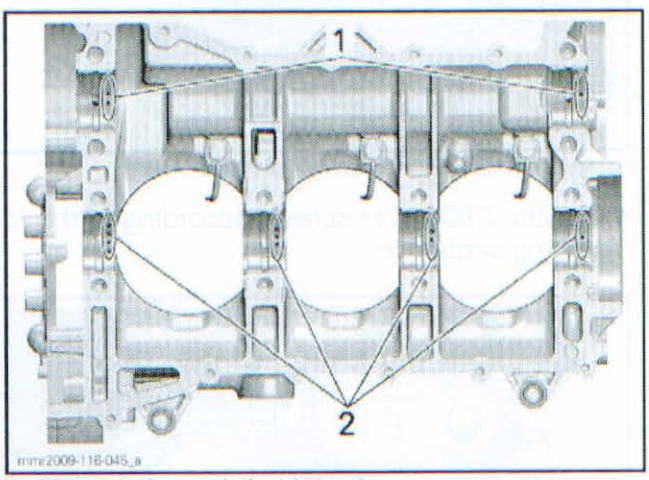

1. *Mark on balancer shaft plain bearings*
2. *Mark on crankshaft plain bearings*

Cylinder Block Cleaning

Clean cylinder block using a part cleaner, then use compressed air to dry it.

Blow out the oil orifices and check if they are not clogged.

www.midwestmanuals.com

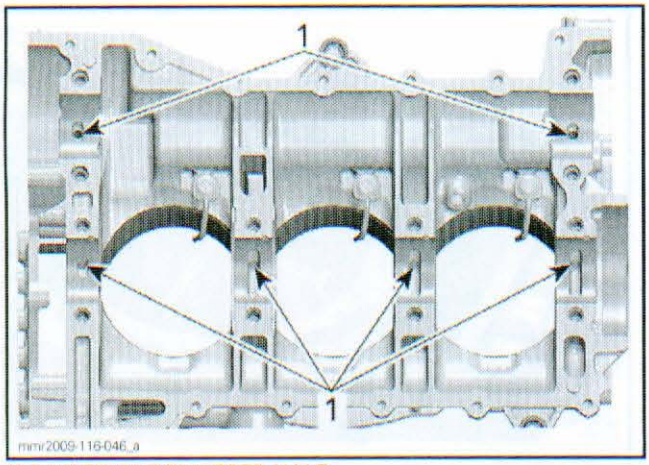

CYLINDER BLOCK UPPER HALF
1. Check oil orifices

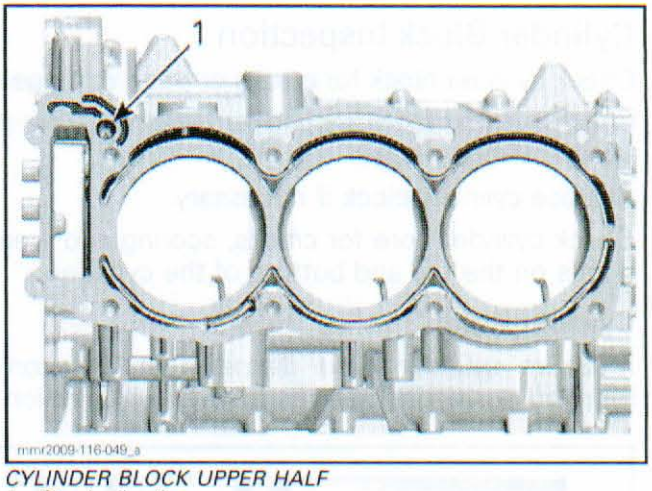

CYLINDER BLOCK UPPER HALF
1. Check oil orifice

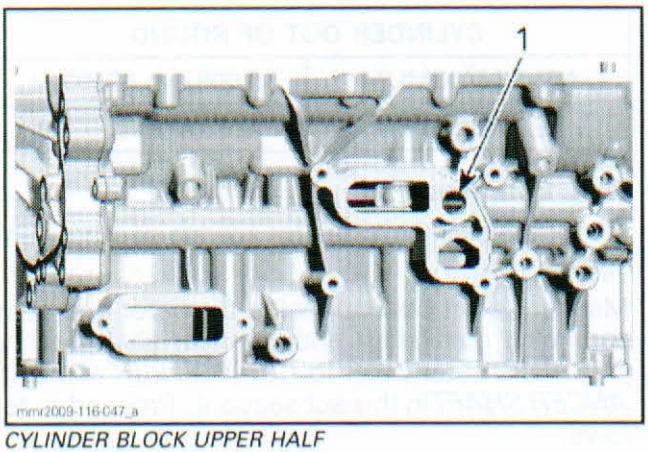

CYLINDER BLOCK UPPER HALF
1. Check oil orifice

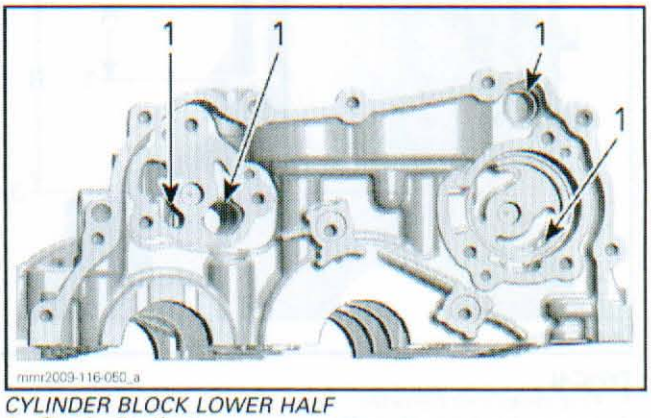

CYLINDER BLOCK LOWER HALF
1. Check oil orifices

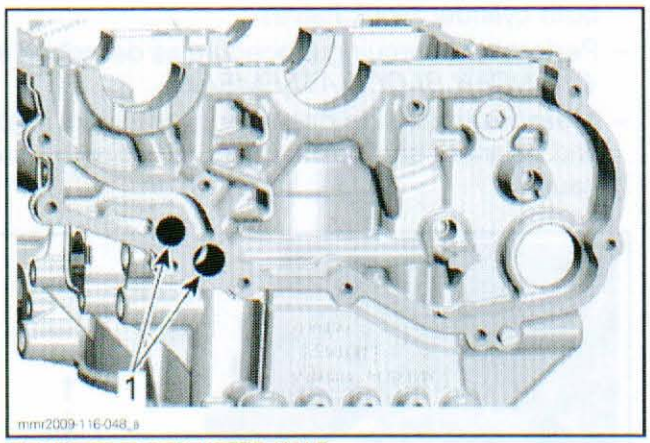

CYLINDER BLOCK UPPER HALF
1. Check oil orifices

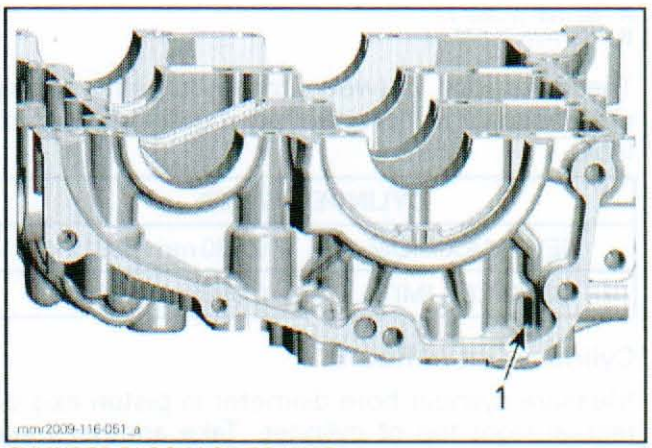

CYLINDER BLOCK LOWER HALF
1. Check oil orifices

Clean all metal components in a solvent.

Clean cylinder block mating surfaces with LOCTITE CHISEL (GASKET REMOVER) (P/N 413 708 500) and a brass brush. Brush a first pass in one direction then make the final brushing perpendicularly (90°) to the first pass (cross hatch).

NOTE: Do not wipe with rags. Use a new clean hand towel only.

www.midwestmanuals.com

Cylinder Block Inspection

Check cylinder block for cracks or other damages.

Check cylinder block mating surfaces for flatness using a straight edge.

Replace cylinder block if necessary.

Check cylinder bore for cracks, scoring and wear ridges on the top and bottom of the cylinder.

Cylinder Taper

Measure cylinder bore diameter at 3 recommended positions. See the following illustration.

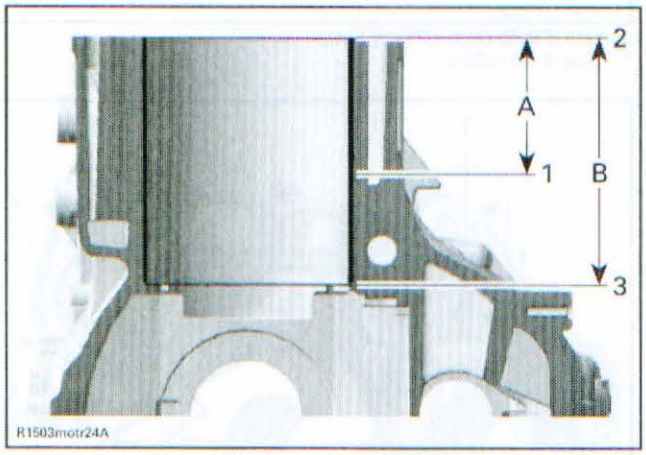

TYPICAL
1. *First measuring diameter*
2. *Second measuring diameter*
3. *Third measuring diameter*

A. 60 mm (2.362 in)
B. 101 mm (3.976 in)

The difference between measurements should not exceed the service limit mentioned in next table.

CYLINDER TAPER	
NEW MAXIMUM	0.030 mm (.0012 in)
SERVICE LIMIT	0.090 mm (.0035 in)

Cylinder Out of Round

Measure cylinder bore diameter in piston axis direction from top of cylinder. Take another measurement 90° from first one and compare.

NOTE: Take the same measuring points as described in *CYLINDER TAPER*.

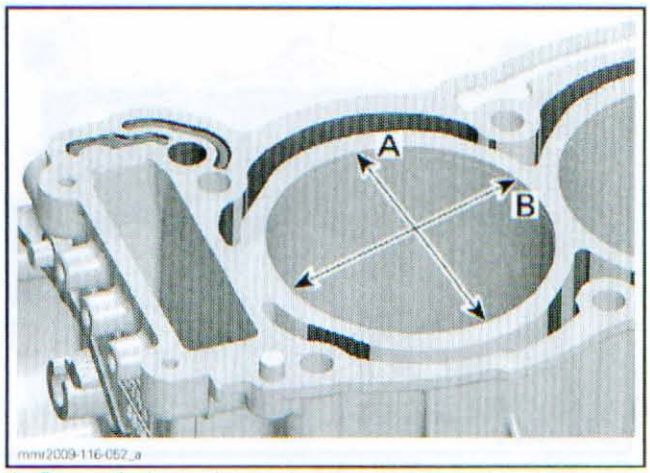

A. Perpendicular to piston axis
B. Parallel to piston axis

CYLINDER OUT OF ROUND	
NEW MAXIMUM	0.008 mm (.0003 in)
SERVICE LIMIT	0.050 mm (.002 in)

Plain Bearings

Check the plain bearings for scoring or other damages.

Measure plain bearing inside diameter and compare with crankshaft and balancer shaft bearing journal diameter (refer to *CRANKSHAFT* and *BALANCER SHAFT* in this subsection). Proceed as follows.

- Use the **OLD** plain bearings and put together both cylinder block halves.
- Perform the torquing procedure as described in *CYLINDER BLOCK ASSEMBLY*.
- Measure the inside diameter of the crankshaft and balancer shaft plain bearings, using a bore gauge.

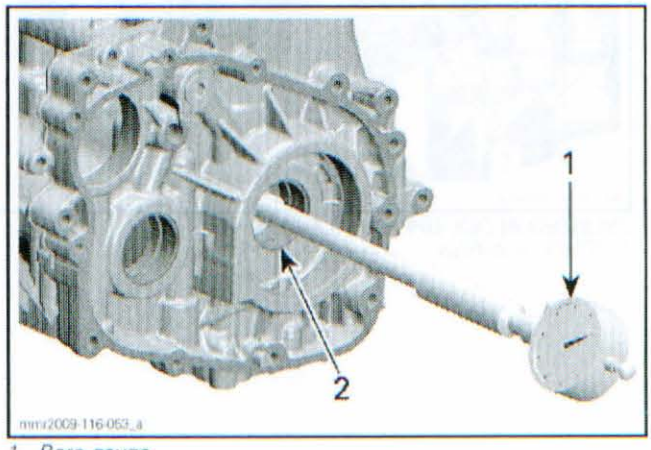

1. *Bore gauge*
2. *Crankshaft plain bearing*

www.midwestmanuals.com

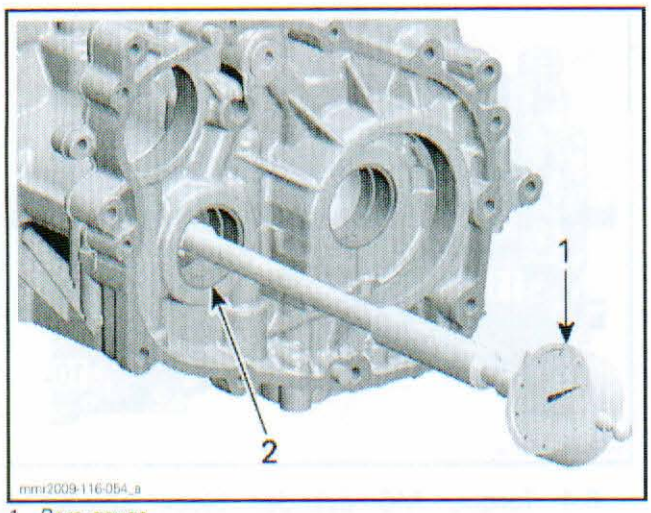

1. Bore gauge
2. Balancer shaft plain bearing

CRANKSHAFT/BALANCER SHAFT PLAIN BEARING INSIDE DIAMETER	
SERVICE LIMIT	36.100 mm (1.4213 in)

Replace bearings if they are out of specifications.

Oil Spray Nozzles

Clean the oil spray nozzles. Refer to *LUBRICATION SYSTEM* subsection.

Cylinder Block Assembly

For assembly, reverse the disassembly procedure. Pay attention to the following details.

1. Correctly reinstall plain bearings as follows.
   1.1 Use **NEW** bearings if diameters are out of specification. Refer to *PLAIN BEARING INSPECTION* in this subsection.

   NOTE: The "narrow" plain bearing halves (20 mm (.787 in) wide) must be placed in crankshaft bearing seat, on magneto side.

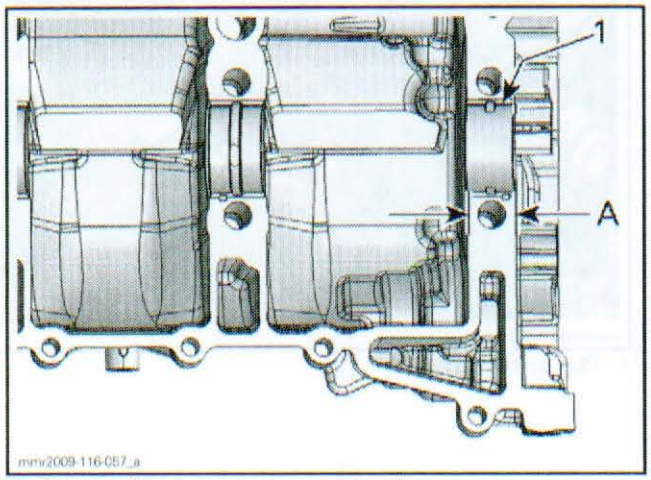

1. Crankshaft plain bearing - magneto side
A. 20 mm (.787 in)

   1.2 Bearings must to be flush with the cylinder block split surface and their protrusions have to fit in the notched areas in the cylinder block seat.

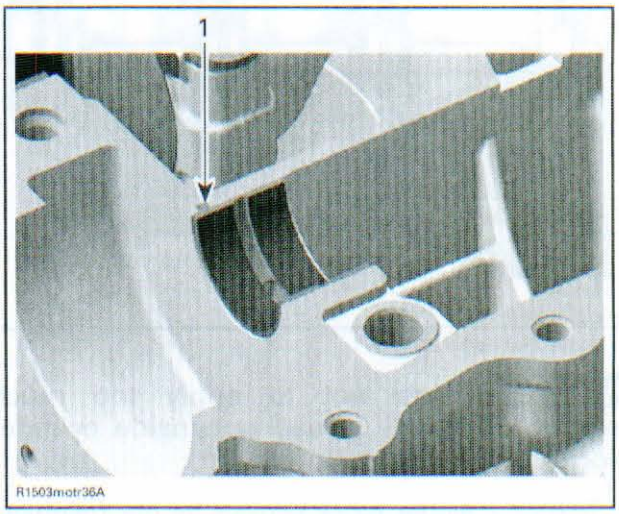

TYPICAL
1. Bearing protrusion in cylinder block notch

2. Install pistons, refer to *PISTONS AND CONNECTING RODS* in this subsection.
3. Apply engine oil on all plain bearings.
4. Install the following components:
   - Crankshaft and thrust washers (refer to *CRANKSHAFT*)
   - Connecting rod caps (refer to *PISTONS AND CONNECTING RODS*)
   - Balancer shaft (refer to *BALANCER SHAFT*).
5. Apply LOCTITE 5910 (P/N 293 800 081) on mating surface of cylinder block lower half as shown on next illustration.

IMPORTANT: When beginning the application of the cylinder block sealant, the assembly and the first torquing should be done within 10 minutes. It is suggested to have all you need on hand to save time.

www.midwestmanuals.com

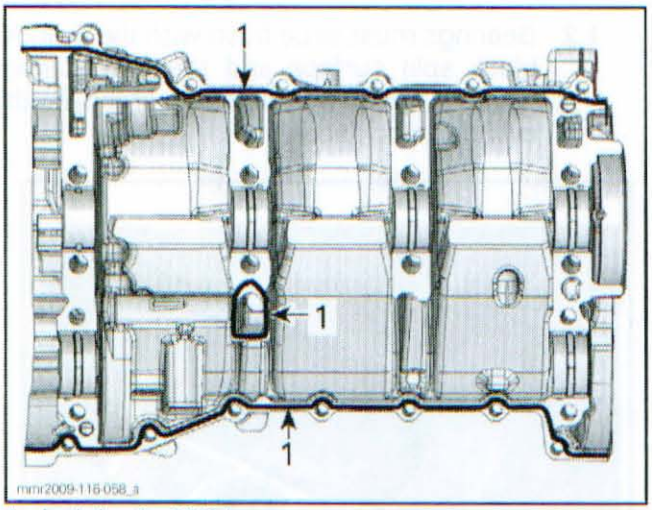

1. Apply Loctite 5910 here

NOTICE **Ensure not to apply too much sealant, as it will spread out inside cylinder block.**

6. Tighten cylinder block screws as per following procedure.
   - 6.1 Torque M9 cylinder block screws to 20 N•m (15 lbf•ft) following the sequence 1 to 8.
   - 6.2 Using the same sequence, torque an additional 120° turn, using an torque angle gauge.

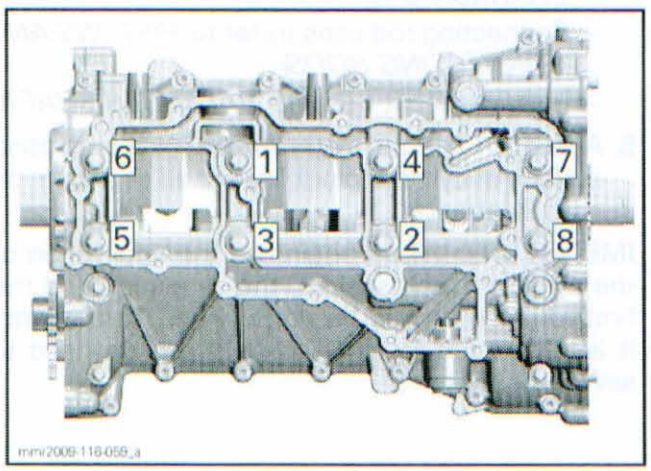

- 6.3 Torque M8 cylinder block screws to 25 N•m (18 lbf•ft) following the sequence 9 to 12.

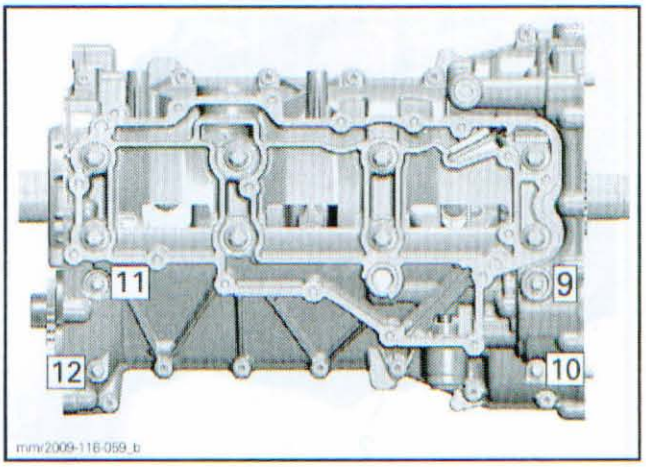

- 6.4 Torque M6 cylinder block screws to 11 N•m (97 lbf•**in**) following the sequence 13 to 25.

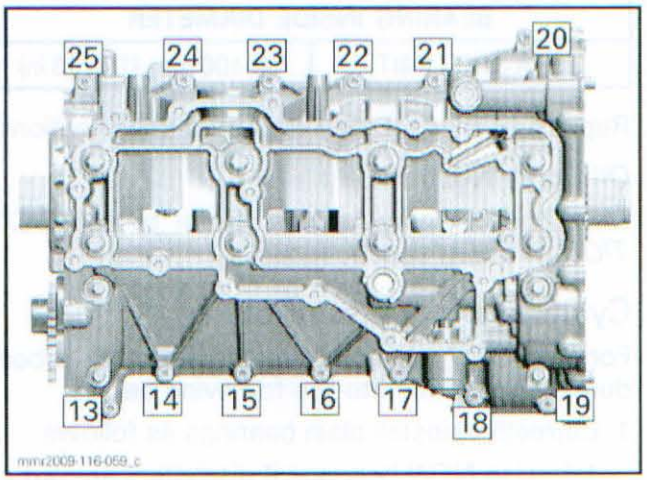

7. Apply LOCTITE 243 (BLUE) (P/N 293 800 060) on plug screw and torque to 16 N•m (142 lbf•**in**).

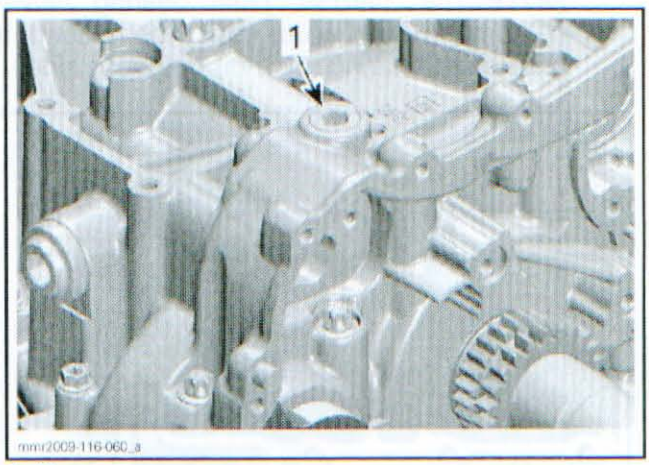

1. Plug screw

www.midwestmanuals.com

NOTE: Before continuing the assembly process, the axial clearance of balancer shaft and crankshaft has to be checked. Refer to *CRANKSHAFT* and *BALANCER SHAFT* in this subsection for the procedure.

8. Reassemble engine in accordance with the proper assembly procedures.

CRANKSHAFT

Crankshaft Locking Procedure

NOTICE **The crankshaft must be locked at TDC for removal and installation work on crankshaft, balancer shaft and camshaft.**

NOTE: When the crankshaft is locked, the piston of cylinder no. 2 is at overlapping TDC. Crankshaft can be not locked at cylinder no. 1 and no. 3 TDC.

1. Remove the valve cover. Refer to *CYLINDER HEAD* subsection.
2. Remove spark plugs.
3. Remove the tip at the end of the TDC DIAL INDICATOR (P/N 414 104 700) and install the DIAL INDICATOR ADAPTER (P/N 529 036 159).

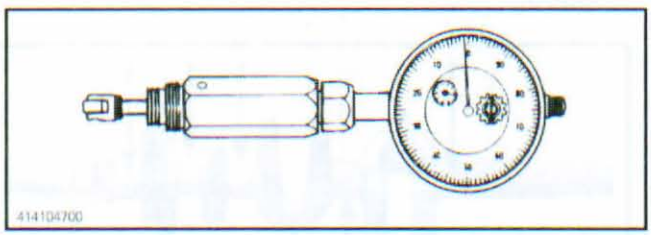

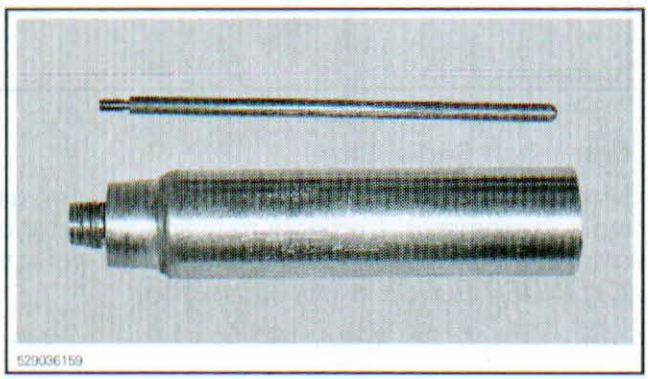

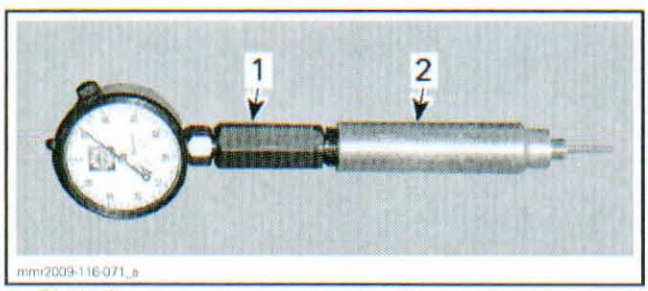

1. *Dial indicator*
2. *Dial indicator adaptor*

4. Install the dial indicator in spark plug hole of cylinder no. 2.

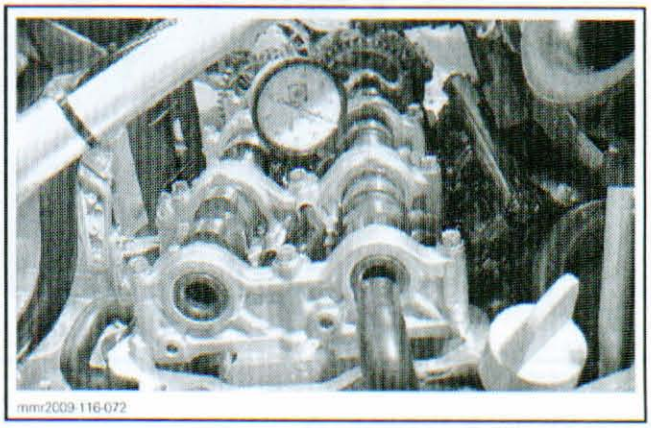

5. Remove crankshaft access plug screw and gasket ring.

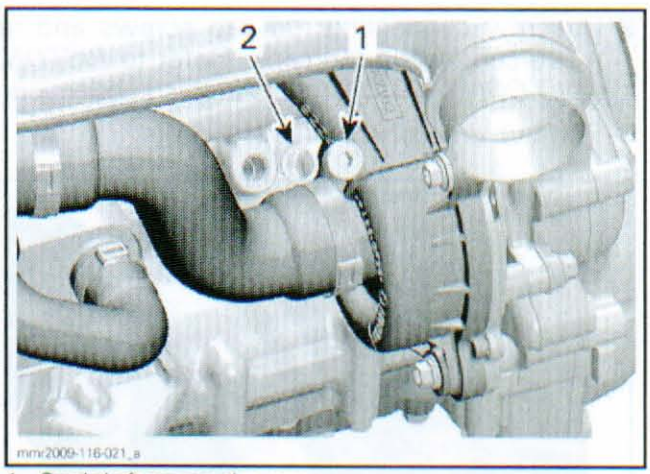

1. *Crankshaft access plug screw*
2. *Gasket ring*

6. Turn engine counterclockwise to bring piston of cylinder no. 2 to overlapping TDC.
7. Use a small screwdriver to check if the groove in the crankshaft is aligned with the hole.
8. Lock crankshaft by using the CRANKSHAFT LOCKING BOLT (P/N 529 036 148).

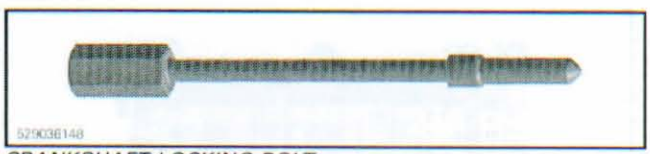

CRANKSHAFT LOCKING BOLT

www.midwestmanuals.com

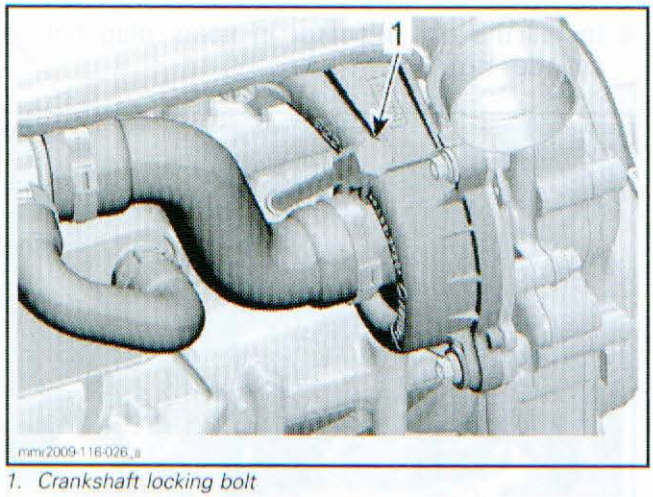

1. Crankshaft locking bolt

Crankshaft Removal

1. Disassemble *CYLINDER BLOCK*, see procedure in this subsection.
2. Unscrew connecting rod cap screws and remove connecting rod caps. Refer to *PISTONS AND CONNECTING RODS* in this subsection.
3. Remove crankshaft thrust washers.

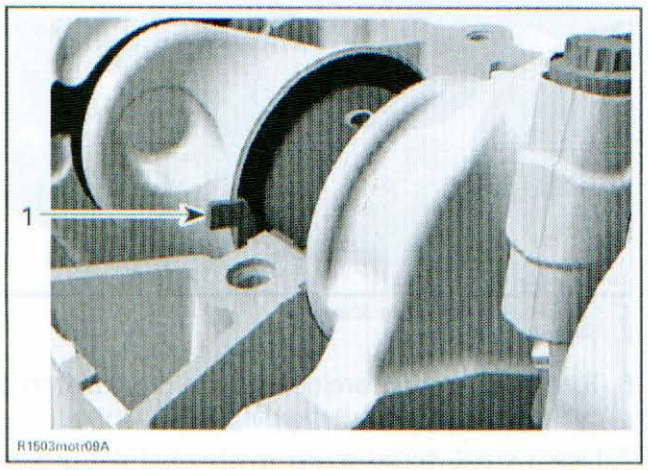

TYPICAL
1. Thrust washer

4. Remove crankshaft from cylinder block.

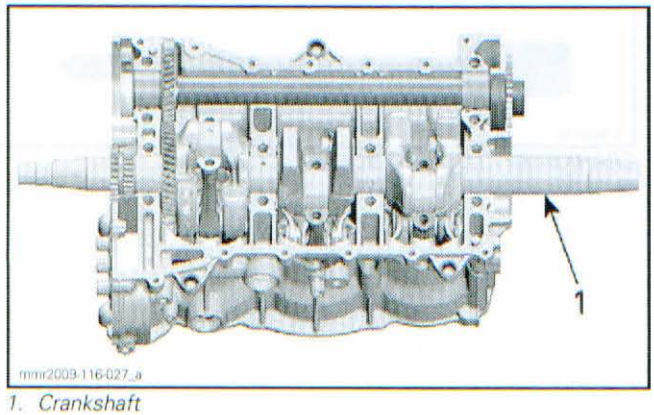

1. Crankshaft

Crankshaft Inspection

Check each bearing journal of crankshaft for scoring, scuffing, cracks or other signs of wear.

Check if crankshaft gears are worn or otherwise damaged.

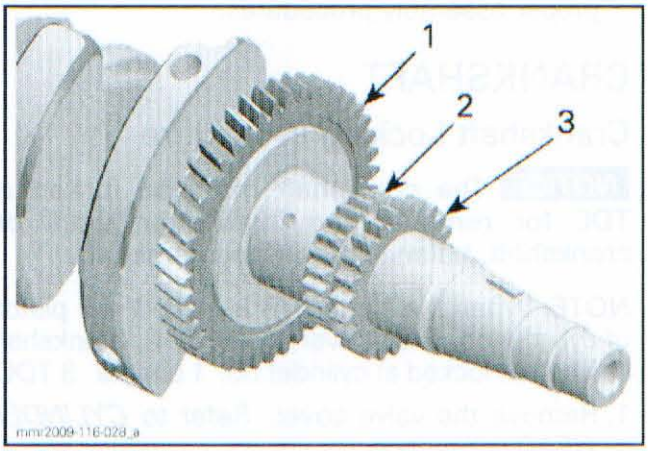

1. Balancer gear
2. Crankshaft timing gear
3. Oil pump drive gear

Replace crankshaft if damaged.

Blow out the oil orifices and check if they are not clogged.

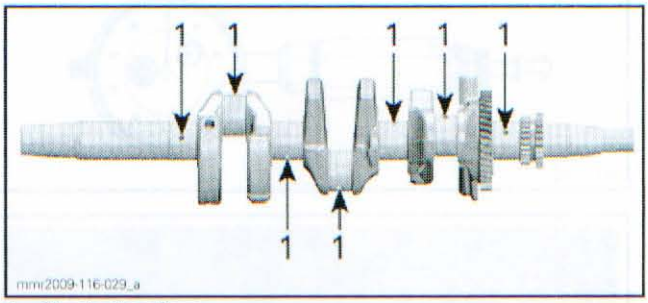

1. Check oil orifices

Crankshaft Radial Play

Measure crankshaft bearing journal diameter, using a micrometer. Compare to inside diameter of crankshaft plain bearings in cylinder block (refer to *CYLINDER BLOCK* in this subsection).

www.midwestmanuals.com

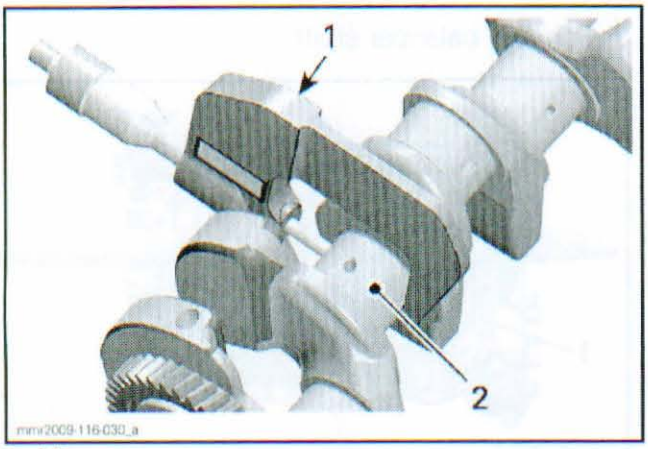

1. *Micrometer*
2. *Crankshaft area for plain bearing*

CRANKSHAFT BEARING JOURNAL DIAMETER	
NEW	35.984 mm to 36.000 mm (1.4167 in to 1.4173 in)
SERVICE LIMIT	35.970 mm (1.4161 in)

CRANKSHAFT RADIAL PLAY	
SERVICE LIMIT	0.10 mm (.0039 in)

Crankshaft Pin Diameter

Measure crankshaft pin diameter, using a micrometer. Compare to inside diameter of connecting rod plain bearings (refer to *CONNECTING ROD INSPECTION* in this subsection).

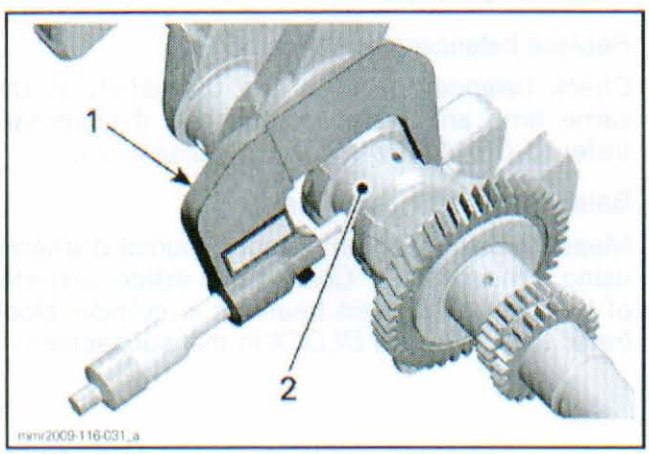

1. *Micrometer*
2. *Crankshaft pin area for plain bearing*

CRANKSHAFT PIN DIAMETER	
NEW	37.984 mm to 38.000 mm (1.4954 in to 1.4961 in)
SERVICE LIMIT	37.970 mm (1.4949 in)

CONNECTING ROD BIG END RADIAL PLAY	
SERVICE LIMIT	0.08 mm (.0031 in)

Crankshaft Axial Play

With the crankshaft in cylinder-block, measure the crankshaft axial play, using a dial indicator.

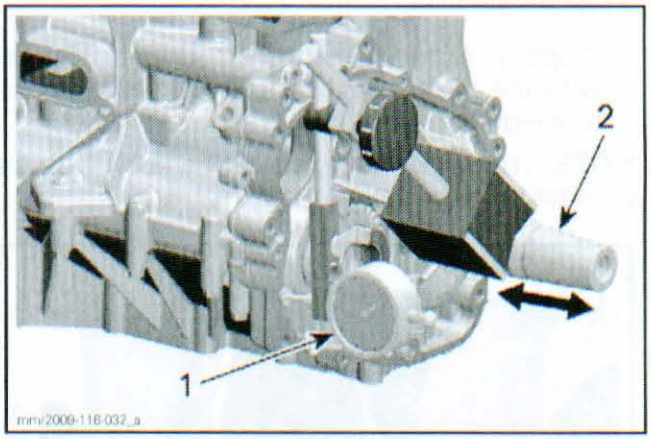

1. *Dial indicator*
2. *Crankshaft*

CRANKSHAFT AXIAL PLAY	
NEW	0.080 mm to 0.313 mm (.0031 in to .0123 in)
SERVICE LIMIT	0.350 mm (.0138 in)

If play is out of specification, replace the crankshaft thrust washers and repeat measurement.

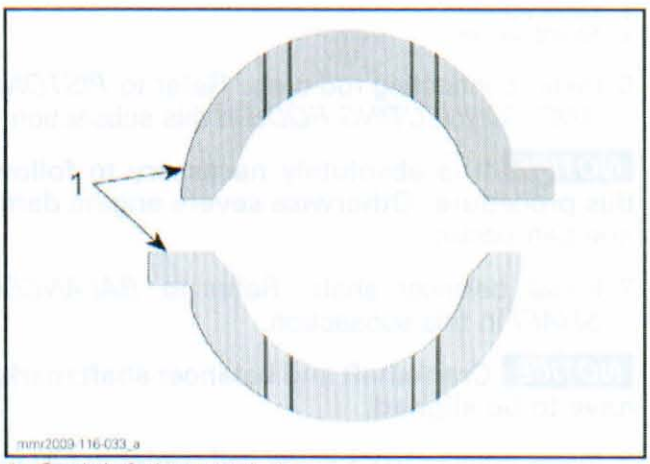

1. *Crankshaft thrust washers*

Crankshaft Installation

For installation, reverse the removal procedure. Pay attention to following details.

1. Install pistons and connecting rods in the cylinder block.
2. Turn cylinder block upside down.

NOTICE **Be careful that connecting rods do not hit the cylinder block.**

3. Apply engine oil on all plain bearings.

www.midwestmanuals.com

4. Install crankshaft.

NOTICE If the oil spray nozzle is damaged, it must be replaced. Refer to *LUBRICATION SYSTEM* subsection.

5. Properly reinstall crankshaft thrust washers with the slots facing against crankshaft counterweights.

NOTE: Thrust washers have to be flush with the cylinder block sealing surface.

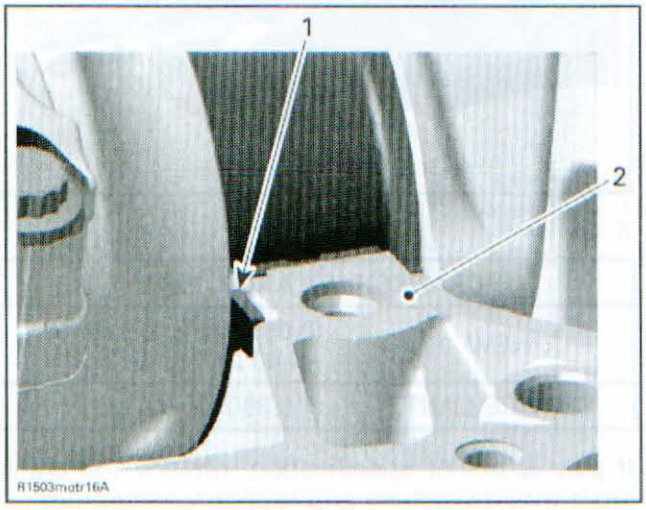

TYPICAL
1. *Thrust washer*
2. *Sealing surface*

6. Install connecting rod caps. Refer to *PISTONS AND CONNECTING RODS* in this subsection.

NOTICE It is absolutely necessary to follow this procedure. Otherwise severe engine damage can occur.

7. Install balancer shaft. Refer to *BALANCER SHAFT* in this subsection.

NOTICE Crankshaft and balancer shaft marks have to be aligned.

8. Install cylinder block lower half. Refer to *CYLINDER BLOCK* in this subsection.
9. Install the CRANKSHAFT LOCKING BOLT (P/N 529 036 148) to position crankshaft at TDC, before further assembly of the engine. See *CRANKSHAFT LOCKING PROCEDURE* in this subsection.

BALANCER SHAFT

Balancer Shaft Removal

1. Disassemble *CYLINDER BLOCK*, see procedure in this subsection.
2. Remove balancer shaft.

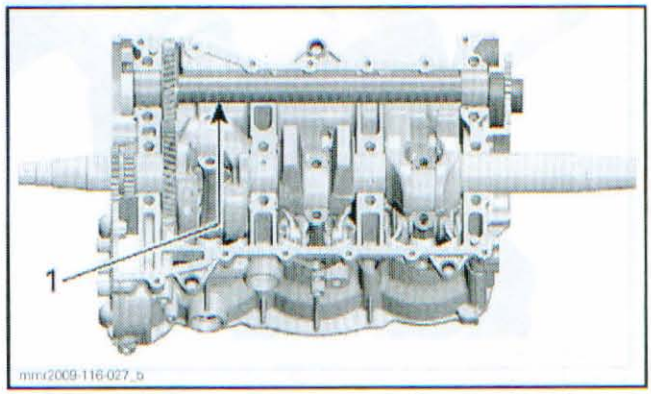

1. Balancer shaft

Balancer Shaft Inspection

Check each bearing journal of balancer shaft for scoring, scuffing, cracks or other signs of wear.

Check if balancer shaft gears are worn or otherwise damaged.

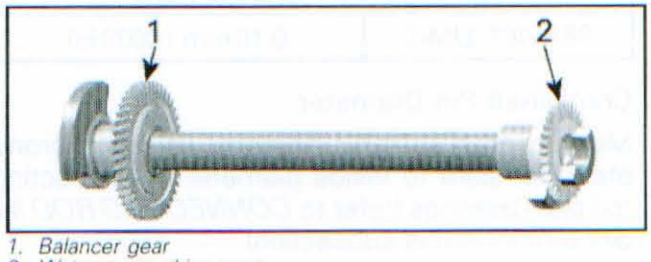

1. Balancer gear
2. Water pump drive gear

Replace balancer shaft if damaged.

Check balancer gear on the crankshaft at the same time and replace crankshaft if necessary (refer to *CRANKSHAFT* in this subsection).

Balancer Shaft Radial Play

Measure balancer shaft bearing journal diameter, using a micrometer. Compare to inside diameter of balancer shaft plain bearings in cylinder block (refer to *CYLINDER BLOCK* in this subsection).

www.midwestmanuals.com

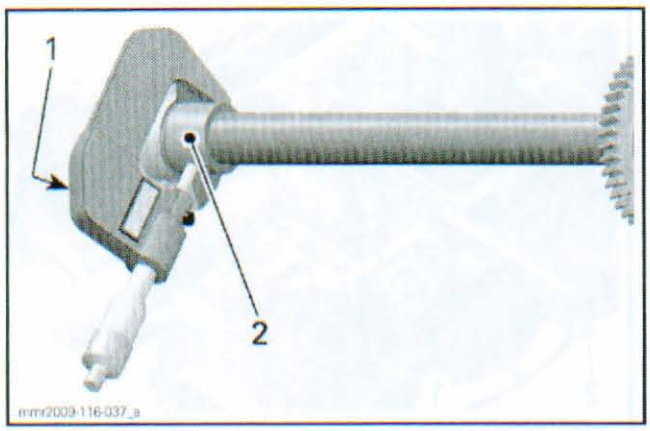

1. *Micrometer*
2. *Balancer shaft area for plain bearing*

BALANCER SHAFT BEARING JOURNAL DIAMETER	
NEW	35.984 mm to 36.000 mm (1.4167 in to 1.4173 in)
SERVICE LIMIT	35.970 mm (1.4161 in)

BALANCER SHAFT RADIAL PLAY	
SERVICE LIMIT	0.10 mm (.0039 in)

Balancer Shaft Axial Play

With the balancer shaft in cylinder-block, measure the balance shaft axial play, using a dial indicator.

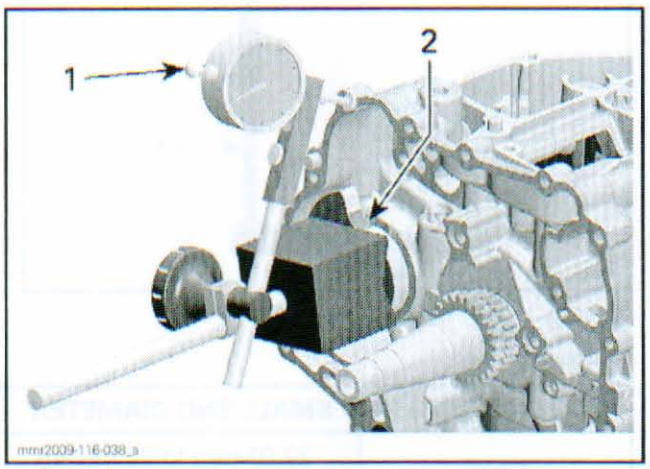

1. *Dial indicator*
2. *Balancer shaft*

BALANCER SHAFT AXIAL PLAY	
NEW	0.10 mm to 0.23 mm (.0039 in to .0091 in)
SERVICE LIMIT	0.35 mm (.0138 in)

Balancer Shaft Installation

For installation, reverse the removal procedure. Pay attention to following detail.

NOTICE Balancer shaft and crankshaft marks have to be aligned.

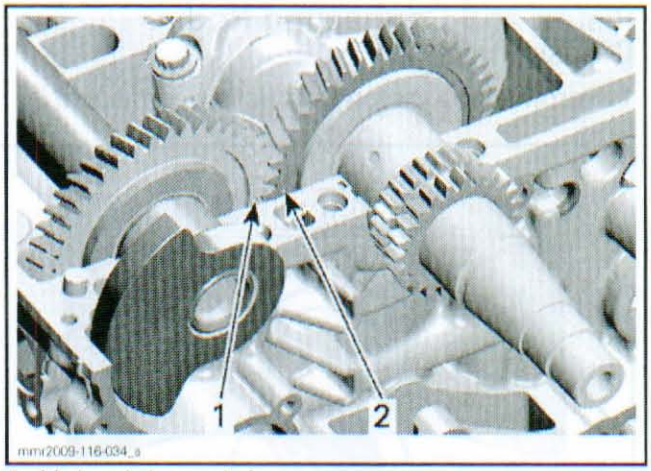

1. *Mark on balancer shaft*
2. *Mark on crankshaft*

PISTONS AND CONNECTING RODS

Piston and Connecting Rod Removal

1. Disassemble *CYLINDER BLOCK* as per procedure in this subsection.
2. Unscrew connecting rod screws and remove connecting rod cap.

NOTE: Before removing the connecting rod caps, mark them to remember the right position when reassembling. It is recommended to measure connecting rod big end axial play prior to remove connecting rod. Refer to *CONNECTING ROD INSPECTION*.

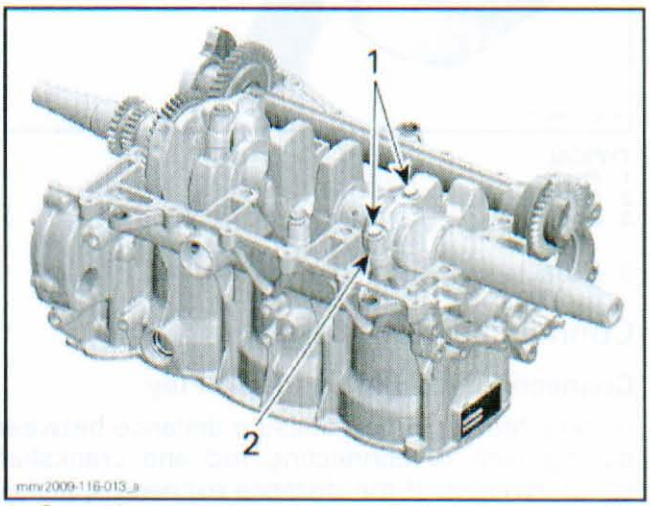

1. *Connecting rod screws*
2. *Connecting rod cap*

3. Remove *CRANKSHAFT* and *BALANCER SHAFT* as per procedure in this subsection.

www.midwestmanuals.com

4. Turn cylinder block and push piston with connecting rod out of the cylinder.

Piston and Connecting Rod Disassembly

1. Remove one piston pin circlip and discard it.

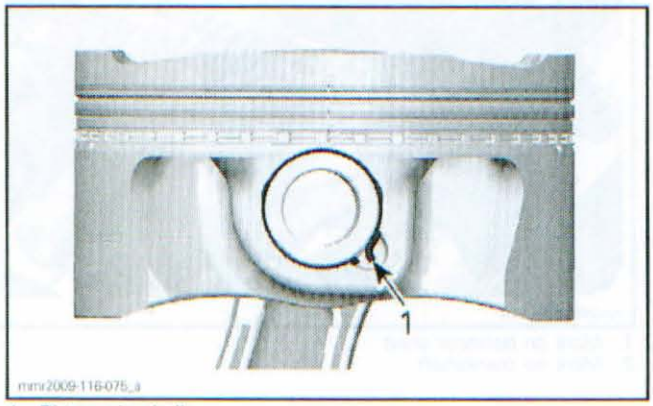

1. Piston pin circlip

NOTE: The removal of both piston pin circlips is not necessary to remove piston pin.

2. Push piston pin out of piston.

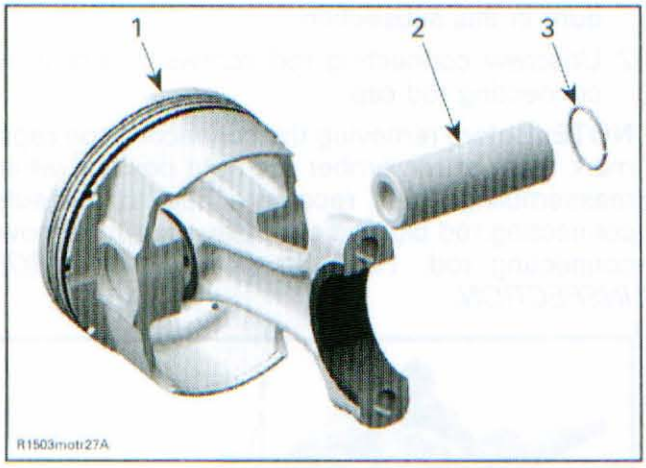

TYPICAL
1. Piston
2. Piston pin
3. Circlip

3. Detach piston from connecting rod.

Connecting Rod Inspection

Connecting Rod Big End Axial Play

Using a feeler gauge, measure distance between butting face of connecting rod and crankshaft counterweight. If the distance exceeds specified tolerance, replace the worn part.

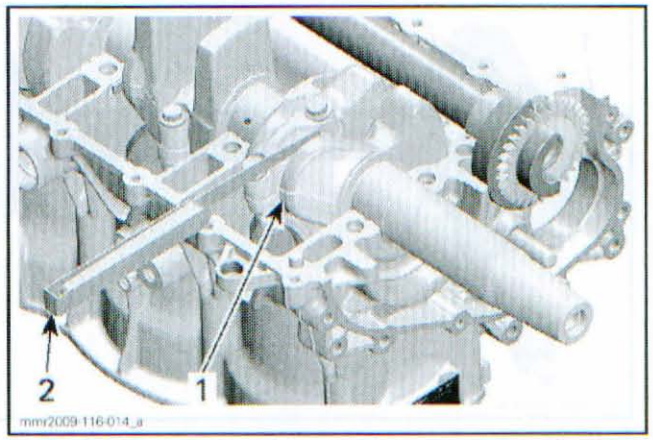

1. Crankshaft
2. Feeler gauge

CONNECTING ROD BIG END AXIAL PLAY	
NEW	0.100 mm to 0.352 mm (.004 in to .014 in)
SERVICE LIMIT	0.400 mm (.016 in)

Connecting Rod Small End Radial Play

Measure connecting rod small end, using a bore gauge.

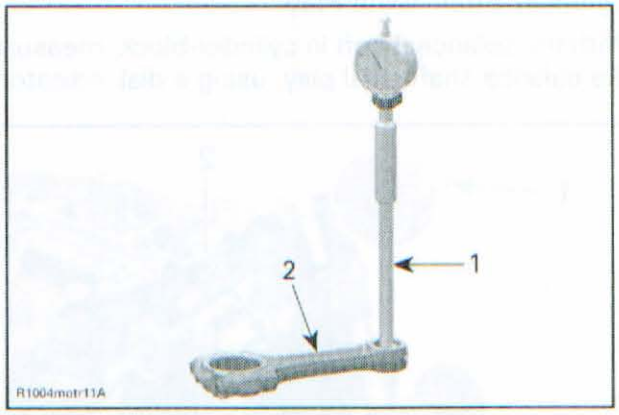

TYPICAL
1. Bore gauge
2. Connecting rod

CONNECTING ROD SMALL END DIAMETER	
NEW	22.01 mm to 22.02 mm (.8665 in to .8669 in)
SERVICE LIMIT	22.04 mm (.8677 in)

If the connecting rod small end diameter is out of specification, replace the connecting rod.

Measure piston pin diameter (refer to *PISTON PIN INSPECTION*) and compare to inside diameter of connecting rod to obtain connecting rod small end radial play.

www.midwestmanuals.com

CONNECTING ROD SMALL END RADIAL PLAY	
SERVICE LIMIT	0.045 mm (.0018 in)

Connecting Rod Big End Radial Play

1. Measure inside diameter of connecting rod big end and compare to crankshaft pin diameter.
   1.1 Install the **OLD** plain bearings as they were mounted initially.
   1.2 Perform the torquing procedure as described in *PISTON AND CONNECTING ROD INSTALLATION* in this subsection.

   NOTE: To measure the connecting rod big end diameter, ALWAYS use the **OLD** connecting rod screws.

   1.3 Measure inside diameter.

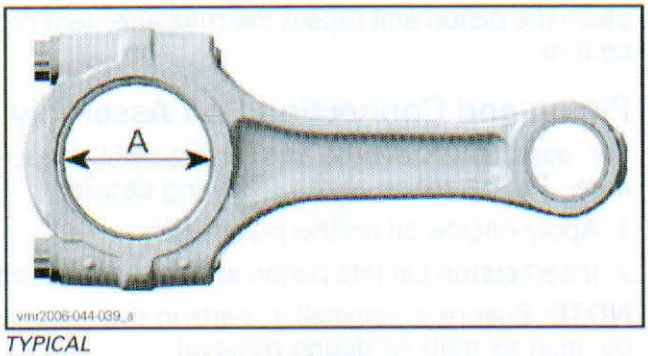

TYPICAL
A. Connecting rod big end bearing

CONNECTING ROD BIG END DIAMETER	
SERVICE LIMIT	38.060 mm (1.4984 in)

CONNECTING ROD BIG END RADIAL PLAY	
SERVICE LIMIT	0.080 mm (.0031 in)

If connecting rod big end diameter is out of specification, install **NEW** plain bearings.

Piston Pin Inspection

Using synthetic abrasive woven, clean piston pin from deposits.

Inspect piston pin for scoring, cracking or other damages.

Measure piston pin diameter, using a micrometer. See the following illustration for the proper measurement position.

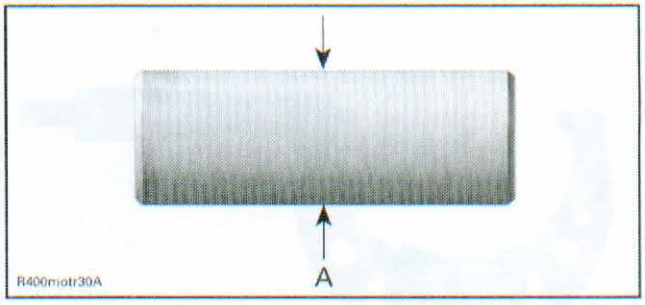

A. Measure piston pin diameter here

PISTON PIN DIAMETER	
NEW	21.991 mm to 21.996 mm (.8658 in to .866 in)
SERVICE LIMIT	21.985 mm (.8656 in)

Replace the piston pin, if it is out of specification.

Piston Inspection

Inspect piston for scoring, scuffing, cracking or other damages. Replace piston and piston rings if necessary.

Using a micrometer, measure piston at 8 mm (.315 in) perpendicularly (90°) to piston pin axis.

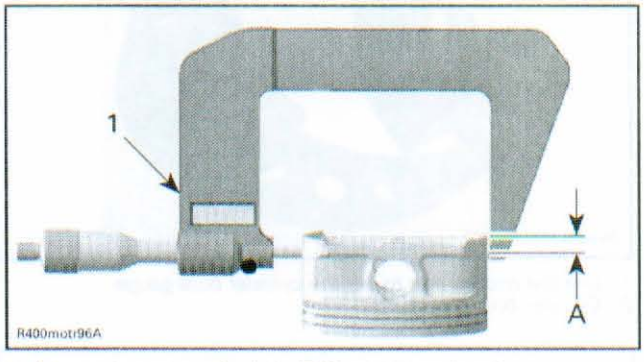

1. Measuring perpendicularly (90°) to piston pin axis
A. 8 mm (.315 in)

PISTON MEASUREMENT	
NEW NOMINAL	90.950 mm to 90.966 mm (3.5807 in to 3.5813 in)
SERVICE LIMIT	90.900 mm (3.5787 in)

Replace the piston, if it is out of specification.

Piston/Cylinder Clearance

1. Adjust and lock a micrometer to the piston dimension.

www.midwestmanuals.com

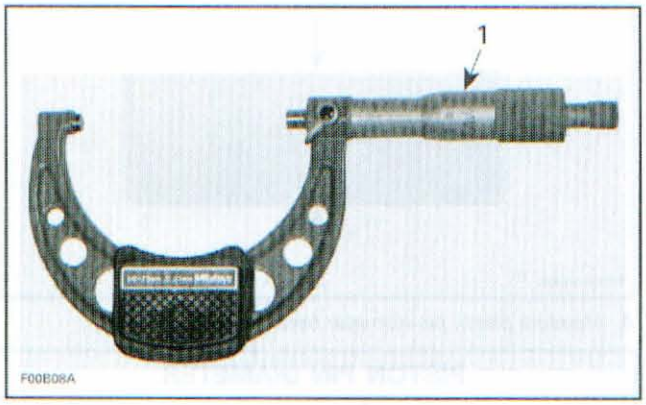

1. Micrometer set to the piston dimension

NOTE: Make sure used piston is not worn.

2. With the micrometer set to the dimension, adjust a cylinder bore gauge to the micrometer dimension and set the indicator to 0 (zero).

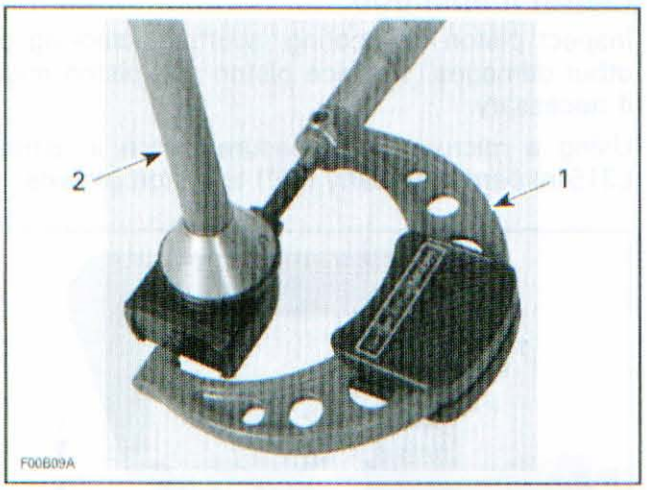

1. Use the micrometer to set the cylinder bore gauge
2. Cylinder bore gauge



TYPICAL
1. Indicator set to 0 (zero)

NOTE: Make sure the cylinder bore gauge indicator is set exactly at the same position as with the micrometer, otherwise the reading will be false.

3. Position the cylinder bore gauge 30 mm (1.181 in) below the cylinder head mating surface, measuring perpendicularly (90°) to piston pin axis.
4. Read the measurement on the cylinder bore gauge. The result is the exact piston/cylinder clearance.

PISTON/CYLINDER CLEARANCE	
NEW NOMINAL	0.027 mm to 0.057 mm (.0011 in to .0022 in)
SERVICE LIMIT	0.100 mm (.0039 in)

If clearance exceeds the specified tolerance, replace the piston and repeat the measurement procedure.

Piston and Connecting Rod Assembly

For assembly, reverse the disassembly procedure. Pay attention to the following details.

1. Apply engine oil on the piston pin.
2. Insert piston pin into piston and connecting rod.

NOTE: Ensure to reinstall all parts in their original position as marked during removal.

3. Install NEW piston pin circlip(s) by using the PISTON CIRCLIP INSTALLER (P/N 529 036 153). Proceed as follows.



PISTON CIRCLIP INSTALLER 1203

NOTICE Always replace disassembled piston pin circlips by NEW ones.

3.1 Place circlip in sleeve as per following illustration.

www.midwestmanuals.com

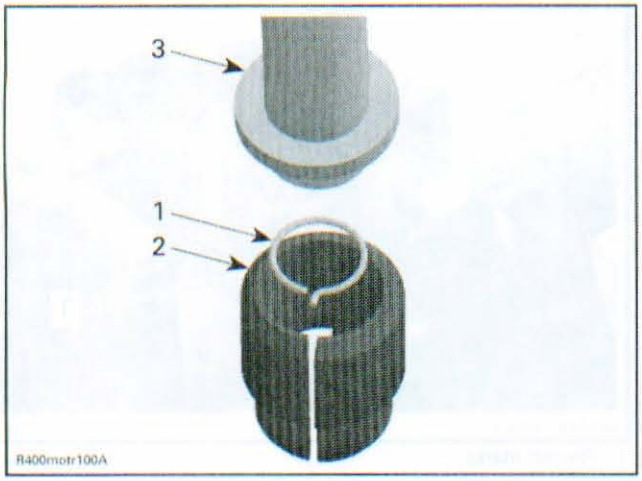

1. *Circlip*
2. *Sleeve*
3. *Piston circlip installer handle*

3.2 Push piston circlip installer handle until circlip reaches mid position in sleeve.

3.3 Insert the end of the handle into piston pin.

3.4 Hold piston and push handle to engage the circlip into piston groove.

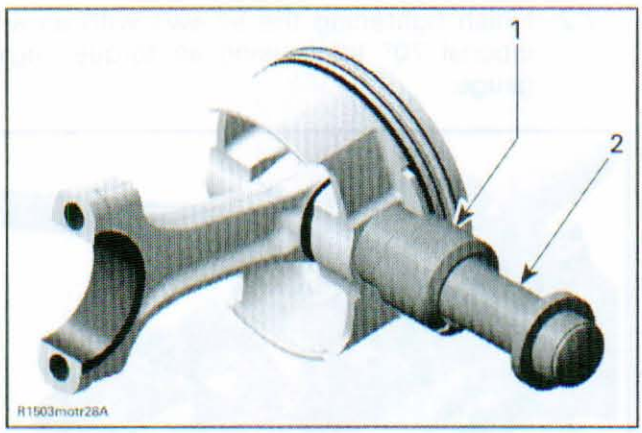

TYPICAL
1. *Sleeve with piston circlip inside*
2. *Piston clip installer handle*

NOTE: Take care that the hook of the piston pin circlip is positioned properly.

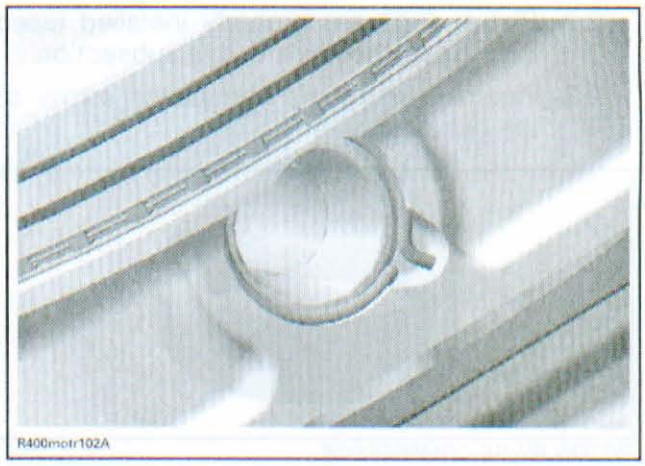

CORRECT POSITION OF THE PISTON PIN CIRCLIP

NOTICE If piston pin circlip installation fails, repeat step 3 by using a NEW circlip.

4. Correctly install plain bearings and carefully clean split surface on both sides (cracked area).

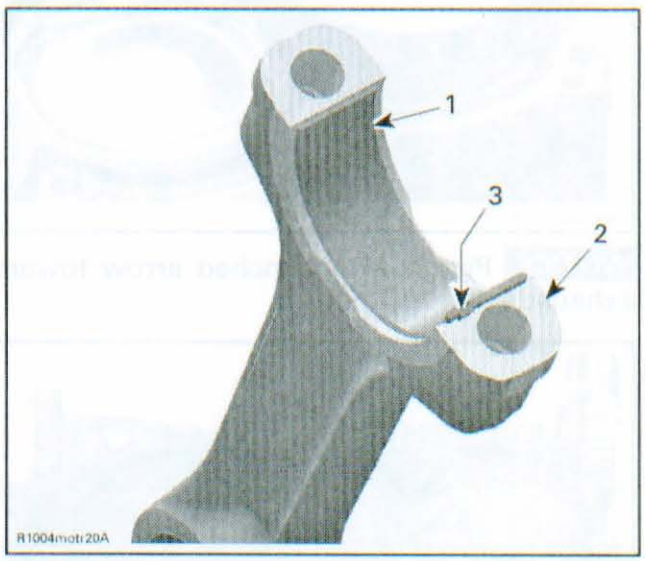

TYPICAL
1. *Half bearing of connecting rod big end*
2. *Split surface of the connecting rod*
3. *Protrusion of bearing in line with connecting rod groove*

Piston and Connecting Rod Installation

1. Use engine oil and lubricate:
   - Piston
   - Piston rings
   - Cylinder bore
   - Connecting rod bearings.
2. Slide piston into cylinder bore by using the PISTON RING COMPRESSOR (P/N 529 036 156). Pay attention to the following.

   2.1 If reused, install piston in its original bore.

www.midwestmanuals.com

2.2 Piston rings are properly installed (spacing). See procedure in this subsection.

2.3 Piston orientation. The punch arrow on the exhaust side.



PISTON RINGS COMPRESSOR



NOTICE Piston with punched arrow toward exhaust side.

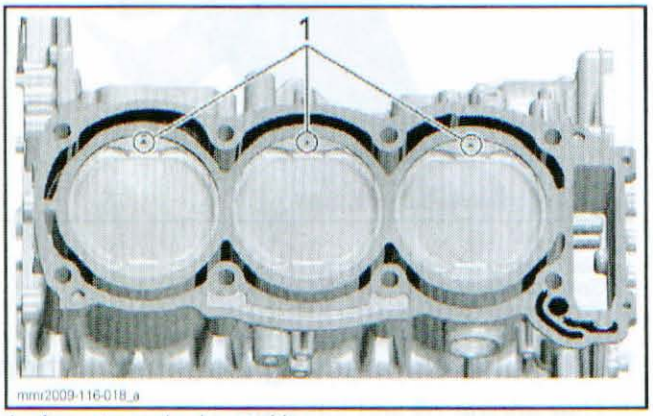

1. Arrow toward exhaust side

3. Turn cylinder block upside down.
4. Install *CRANKSHAFT* as per procedure in this subsection.
5. Oil the crankshaft crank pin.
6. Install connecting rod caps.

NOTE: Printed marks on connecting rod and cap must point together.

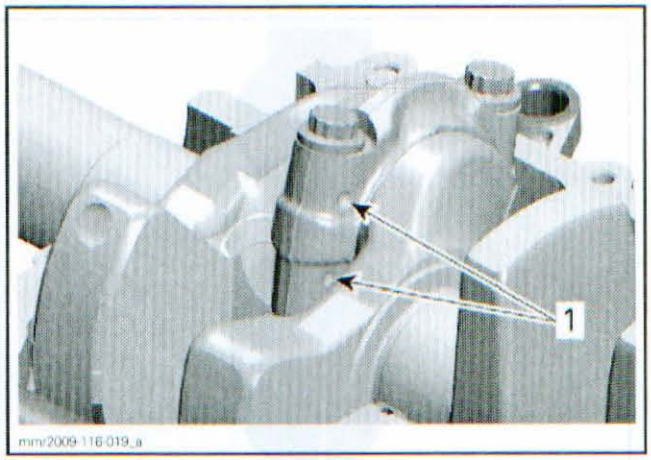

1. Printed marks

NOTICE Always use NEW connecting rod screws for the final assembly of the connecting rod. As the screws have been stretched from the previous assembly, it is very important to use NEW screws at assembly.

7. Apply oil on head of NEW connecting rod screws and torque as per following procedure.
   7.1 First, torque screws to 40 N•m (30 lbf•ft).
   7.2 Finish tightening the screws with an additional 70° turn, using an torque angle gauge.

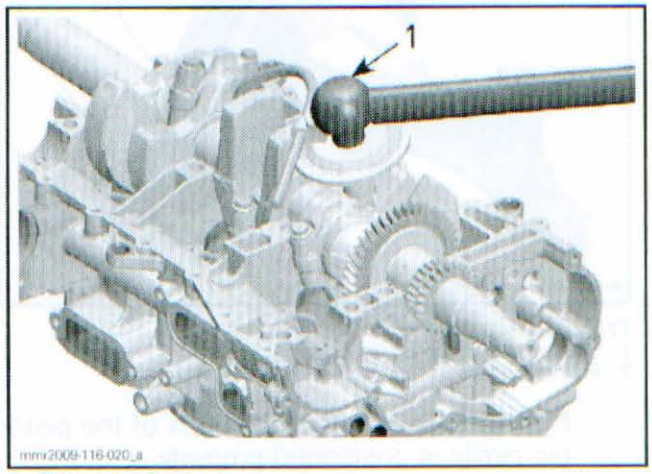

1. Torque angle gauge

NOTICE Failure to strictly follow this procedure may cause screws to loosen and lead to severe engine damage.

8. Install *BALANCER SHAFT* as per procedure in this subsection.
9. Install all other removed parts.

www.midwestmanuals.com

PISTON RINGS

Piston Ring Removal

1. Remove piston, see procedure in this subsection.
2. Remove rings from piston.

Piston Ring Inspection

Ring/Piston Groove Clearance

Using a feeler gauge measure each ring/piston groove clearance.

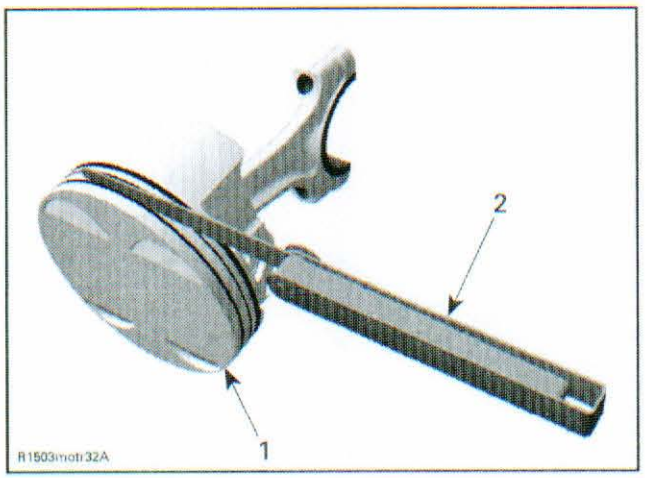

TYPICAL
1. Piston
2. Feeler gauge

RING/PISTON GROOVE CLEARANCE	
UPPER COMPRESSION RING	
NEW	0.030 mm to 0.070 mm (.0012 in to .0028 in)
SERVICE LIMIT	0.150 mm (.0059 in)
LOWER COMPRESSION RING	
NEW	0.020 mm to 0.060 mm (.0008 in to .0024 in)
SERVICE LIMIT	0.150 mm (.0059 in)
OIL SCRAPER RING	
NEW	0.010 mm to 0.180 mm (.0004 in to .0071 in)
SERVICE LIMIT	0.250 mm (.0098 in)

If the clearance is out of specification, the piston and rings should be replaced.

Ring End Gap

1. Place piston ring in the cylinder bore between 8 mm to 16 mm (.315 in to .63 in) from top of cylinder.

NOTE: In order to correctly position the ring in the cylinder bore, use piston as a pusher.

2. Using a feeler gauge, check ring end gap.

RING END GAP	
UPPER COMPRESSION RING	
NEW	0.25 mm to 0.40 mm (.0098 in to .0157 in)
SERVICE LIMIT	0.60 mm (.0236 in)
LOWER COMPRESSION RING	
NEW	0.20 mm to 0.40 mm (.0079 in to .0157 in)
SERVICE LIMIT	0.70 mm (.0276 in)
OIL SCRAPER RING	
NEW	0.20 mm to 0.70 mm (.0079 in to .0276 in)
SERVICE LIMIT	1.00 mm (.0394 in)

If the ring end gap is out of specification, replace piston rings.

Piston Ring Installation

1. Install the piston rings in the following assembly order.

   NOTE: Use a ring expander to prevent breakage during installation. The oil ring must be installed by hand.

   1.1 Install oil scraper ring.

   1.2 Install the lower compression ring with the word "N and TOP" facing up.

   1.3 Install upper compression ring with the word "N and TOP" facing up.

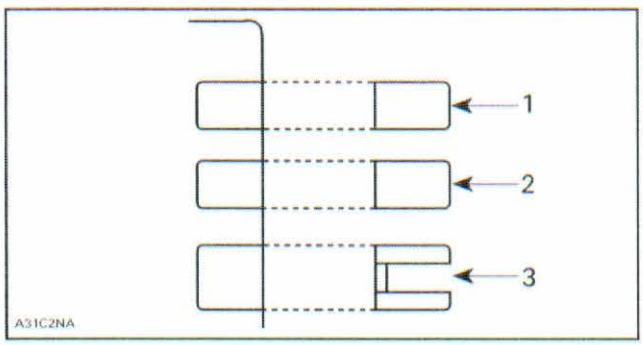

1. Upper compression ring
2. Lower compression ring
3. Oil scraper ring

NOTICE **Ensure that upper and lower compression rings are not interchanged.**

2. Check that rings rotate smoothly after installation.

www.midwestmanuals.com

3. Space the piston ring end gaps 120° apart and do not align the gaps with the piston pin bore or the thrust side axis.

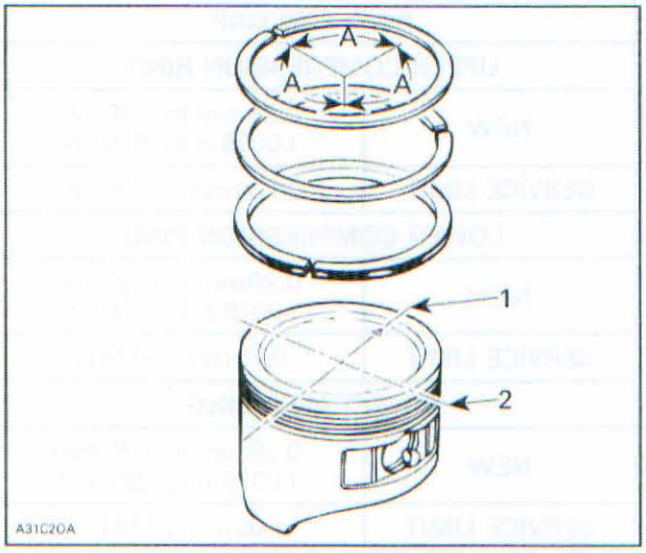

TYPICAL
1. *DO NOT align ring gap with piston trust side axis*
2. *DO NOT align ring gap with piston pin bore axis*

A. 120°

www.midwestmanuals.com

OVERVIEW

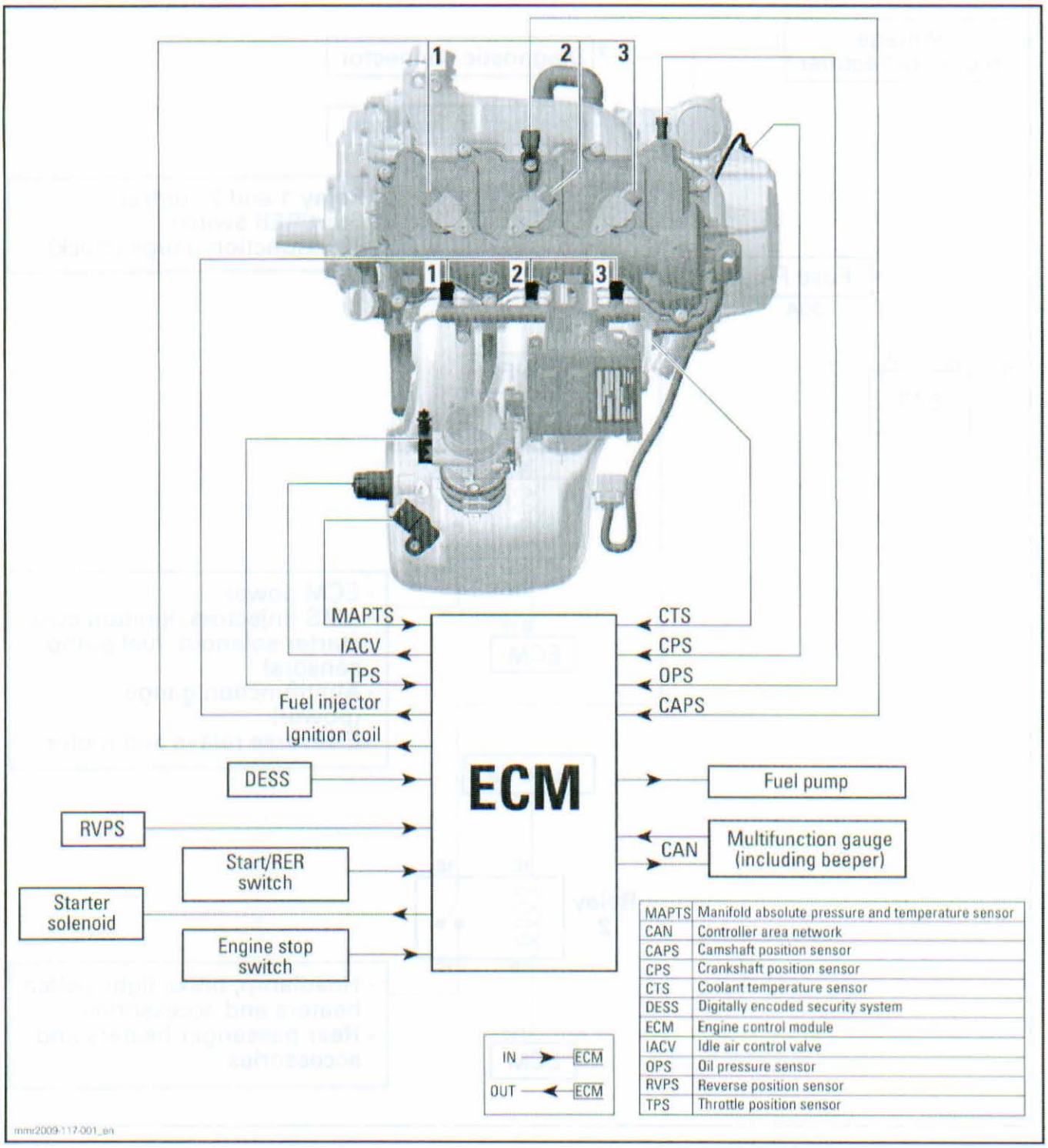

MAPTS	Manifold absolute pressure and temperature sensor
CAN	Controller area network
CAPS	Camshaft position sensor
CPS	Crankshaft position sensor
CTS	Coolant temperature sensor
DESS	Digitally encoded security system
ECM	Engine control module
IACV	Idle air control valve
OPS	Oil pressure sensor
RVPS	Reverse position sensor
TPS	Throttle position sensor

www.midwestmanuals.com

POWER DISTRIBUTION

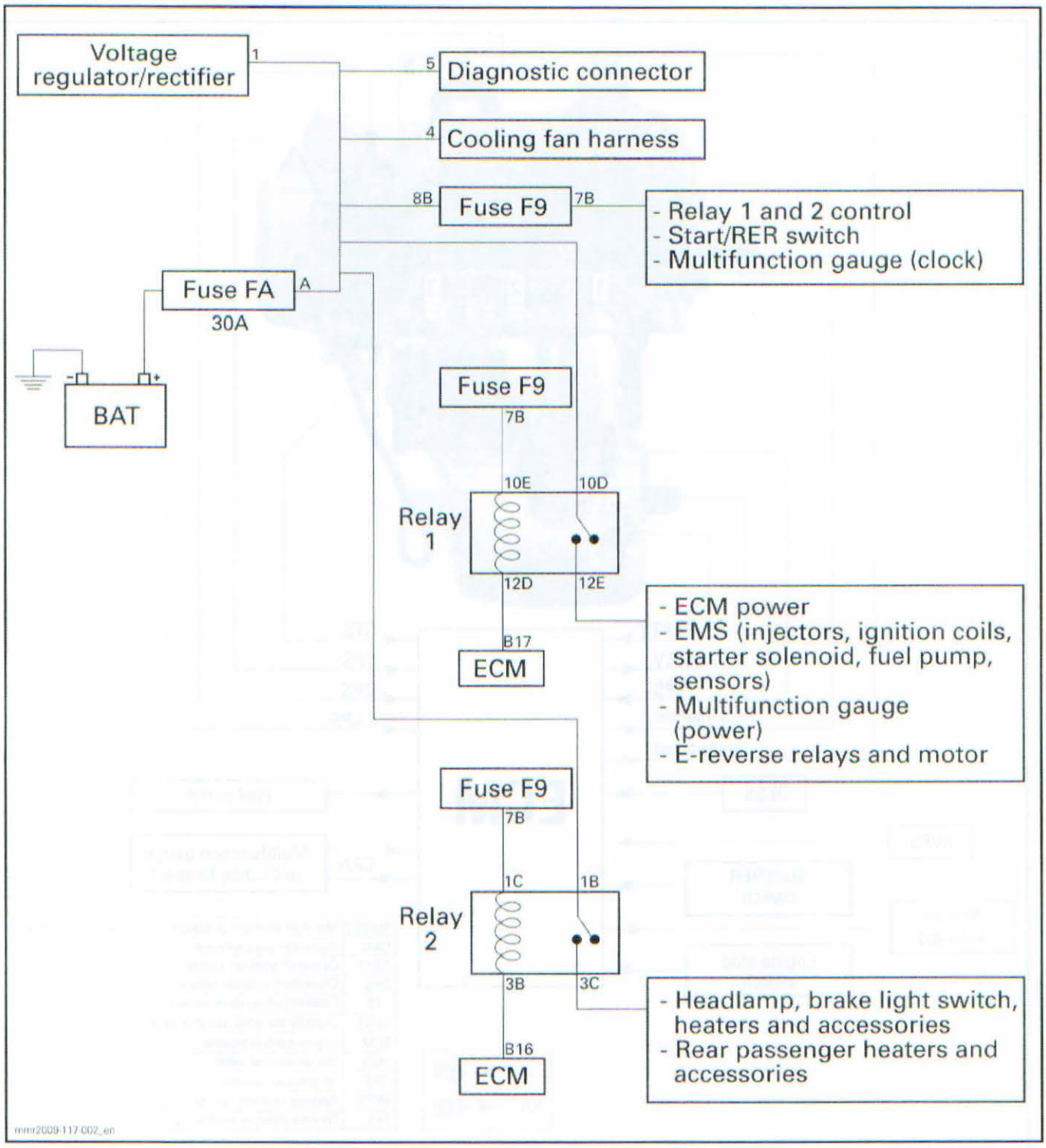

www.midwestmanuals.com

GENERAL

SYSTEM DESCRIPTION

The engine management system (EMS) controls or interacts with the following systems:

- Electronic fuel injection (EFI)
- Digitally Encoded Security System (D.E.S.S.)
- Starting system
- Ignition system
- Electronic Reverse
- Lubrication system
- Electrical accessories.

The EMS also offers a monitoring system and diagnostic mode to help troubleshooting some problems. Refer to *MONITORING SYSTEM AND FAULT CODES* section for more details.

The power distribution is also controlled by the engine management system.

Engine Control Module (ECM)

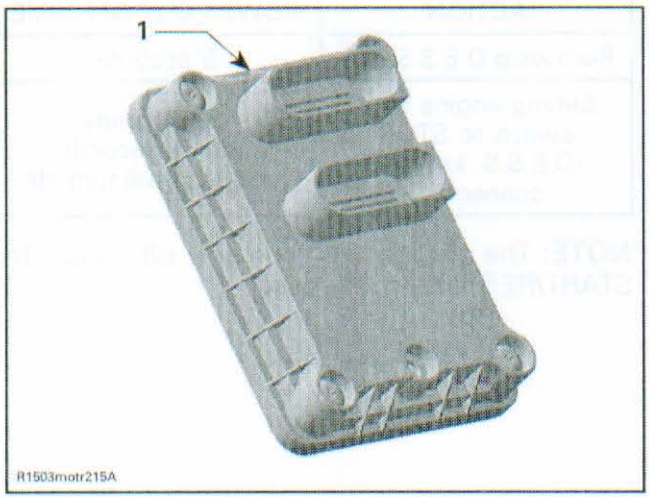

1. TYPICAL ECM

The ECM is located below the front part of fuel tank.

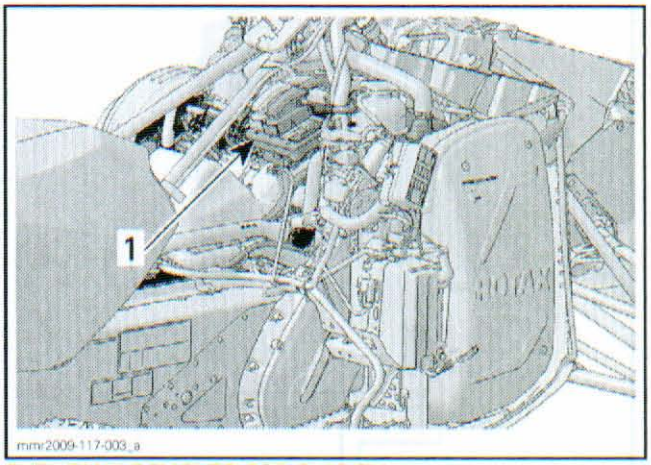

FUEL TANK REMOVED FOR CLARITY
1. ECM

The ECM is the central point of the engine management system. It reads the inputs, makes computations, uses pre-determined parameters and sends the proper signals to the outputs for proper engine management.

The ECM features a permanent memory that will keep the fault codes, customer information and other engine information when the engine is stopped and when battery is removed.

Throttle Protection

If throttle is not completely closed during engine startup, engine will not start.

To revert to normal operation, release the throttle completely.

Engine Drowned Mode

This mode is intended to crank an engine that is fuel flooded. When this mode is active, fuel injectors and ignition coils are disabled.

To activate the drowned mode:

1. Fully squeeze throttle lever and hold.
2. Press the START/RER button.
3. The mode is now on.

To exit this mode, release throttle and start engine normally.

Controller Area Network (CAN)

The CAN protocol is an ISO standard for serial data communication. The CAN bus links the ECM and the multifunction gauge. Two wires connect each component and they are in constant communication with each other. CAN lines consist of a pair of wires (WHITE/BEIGE and WHITE/BLACK).

www.midwestmanuals.com

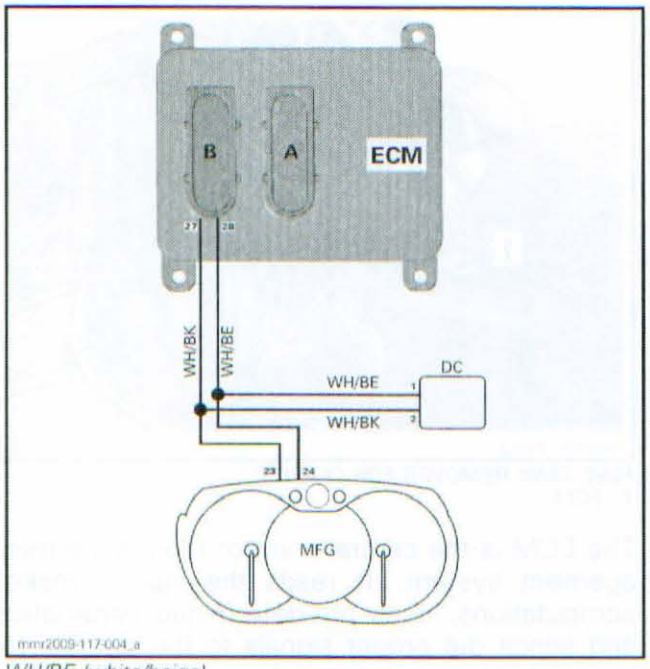

WH/BE (white/beige)
WH/BK (white/black)
MFG (multifunction gauge)
ECM (electronic control module)
DC (diagnostic connector)

Fault codes are broadcasted to the CAN bus and can be displayed in B.U.D.S. or in the premium multifunction gauge.

Power Distribution

All the electrical system is powered by DC current supplied by a 12 V battery. The battery charge is maintained by the charging system.

Electrical system is protected by fuses located in the fuse box. Refer to *LIGHTS, INSTRUMENTS AND ACCESSORIES*.

The system uses 2 relays that control different electrical components.

Relay 1 Functions

When the START/RER button is briefly pressed or held, it wakes up the ECM that in turn, powers the relay 1. At this point, the fuel pump is activated for approximately 2 seconds to build up pressure in the fuel system. Also, engine-related sensors and injectors are continuously powered. **The ECM switches the ground to complete the electrical circuits it controls.**

If the engine stop switch is in the RUN position and the D.E.S.S. key is present while the START/RER button is held, the starter solenoid is activated and engine starts.

Relay 2 Functions

When engine reaches approximately 500 RPM, the ECM activates the relay 2. At this point, lights, heaters and accessories are powered.

Multifunction Gauge Current Supply

Multifunction gauge is powered for approximately 20 seconds when briefly pressing the START/RER button.

NOTE: The clock power line in gauge is permanently powered by the vehicle battery.

Automatic Power Cut-Off

The ECM features an automatic power cut-off that will completely turn off the ECM (after engine was running) and thus cutting all power to components. All the vehicle electrical loads will be turned off (except the clock in the multifunction gauge). This feature prevents the battery from discharging if the D.E.S.S. key is left on its post when the engine is not running.

The cut-off time is as follows.

ACTION	POWER CUT-OFF TIME
Removing D.E.S.S. key	5 seconds
Setting engine stop switch to STOP (D.E.S.S. key still connected)	30 seconds (after 5 seconds, headlamp will turn off)

NOTE: The ECM will remain off until the START/RER button is pressed.

www.midwestmanuals.com

COMMUNICATION TOOLS AND B.U.D.S. SOFTWARE

SERVICE TOOLS

Description	Part Number	Page
D.E.S.S. POST INTERFACE	529 036 019	161
MPI-2 DIAGNOSTIC CABLE	710 000 851	161
MPI-2 INTERFACE CARD	529 036 018	159
T-HARNESS	529 035 869	158, 160

SERVICE TOOLS – OTHER SUPPLIER

Description	Part Number	Page
MALE-FEMALE EXTENSION SERIAL CABLE	DB9	161–162

GENERAL

Refer to *PROCEDURES* for instructions on the communication tools.

If communication problems occurs, refer to *TROUBLESHOOTING*.

TROUBLESHOOTING

DIAGNOSTIC TIPS

IMPORTANT: Make sure all connections have been made **before starting B.U.D.S.** to allow proper operation.

MPI-2 Connection Troubleshooting

The MPI-2 includes 2 status lights to show the connection conditions: USB and CAN.
Both lights must be GREEN so that MPI-2 works properly. Otherwise, refer to the following charts.

Flashing GREEN lights indicate the communication is active.

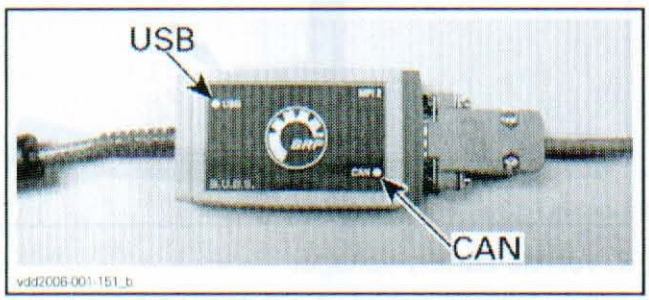

Prerequisite for USB Communication:
- PC Computer turned on.
- MPI-2 connected to PC computer.

COMMUNICATION PROBLEM (USB)	
STATUS	WHAT TO DO
Light is OFF	– Check USB connection between MPI-2 and PC computer. – Check USB operation on PC computer (hardware or Windows drivers).

Prerequisite for CAN Communication:
1. MPI-2 connected to diagnostic connector.
2. D.E.S.S. key installed on its post.
3. B.U.D.S. started and logged.

COMMUNICATION PROBLEM (CAN)	
STATUS	WHAT TO DO
Light is OFF	– Check MPI protocol in B.U.D.S. – Check connection between MPI-2 and diagnostic cable connector. – Check connection between diagnostic cable connector and T-harness. – Check fuse, wiring and connectors, and diode of T-harness. – Check connection between T-harness and diagnostic connector. – Check that ECM is powered.
Light is RED	– Check CAN wires and connectors on vehicle.

www.midwestmanuals.com

Communication Problems with B.U.D.S.

B.U.D.S. Screen is Cycling

When T-harness is connected to the vehicle diagnostic connector and the following is observed:

- Fuel pump is continuously cycling ON and OFF.
- **Read Data** and **Write Data** buttons in B.U.D.S. are continously cycling black and grey.

Install D.E.S.S. key on its post to solve the problem.

Missing Module

If an "X" is shown in the status bar, it means that no "ECU" is communicating with the MPI. Check the following:

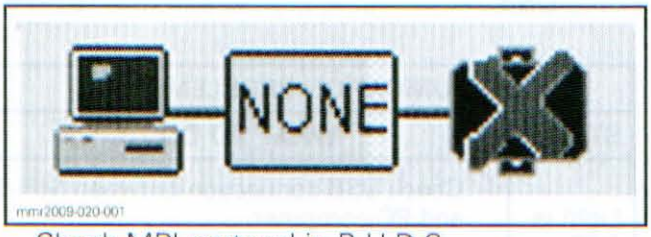

- Check MPI protocol in B.U.D.S.
- Check connections between the PC computer and the vehicle.

If one or more "ECU" is (are) not communicating with the MPI a module may not be powered or is defective.

Check to find which module is missing in B.U.D.S.

The tab of the missing module will not be visible at the bottom of B.U.D.S. screen.

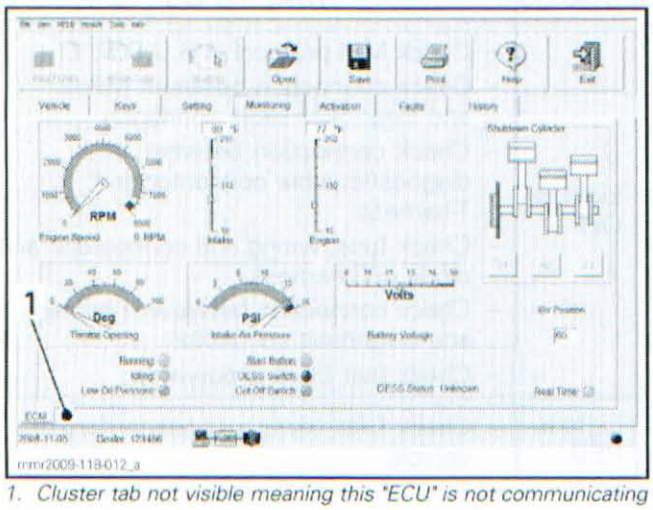

1. Cluster tab not visible meaning this "ECU" is not communicating

If the module is missing, check wiring and power supply to that module.

No Vehicle is Detected

If B.U.D.S. is trapped in a loop that continually display **No vehicle detected...**, exit B.U.D.S. then restart it.

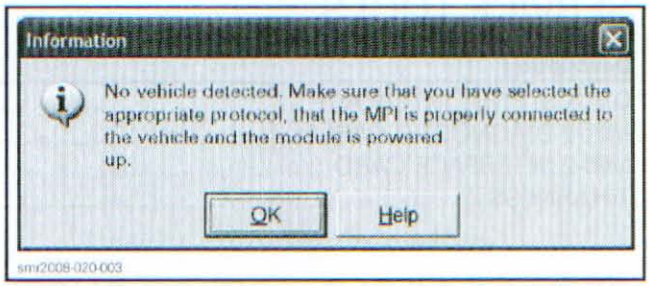

T-Harness Operation Test

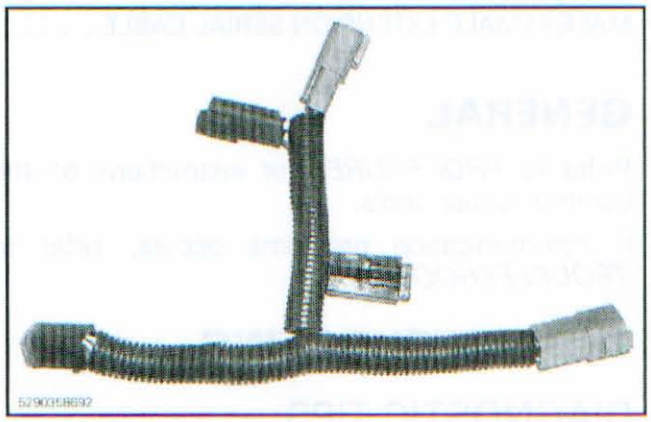

When the T-HARNESS (P/N 529 035 869) is connected to the vehicle diagnostic connector, ECM and multifunction gauge should turn on. Otherwise, check the following and repair or replace T-harness if any test failed.

1. T-harness fuse.

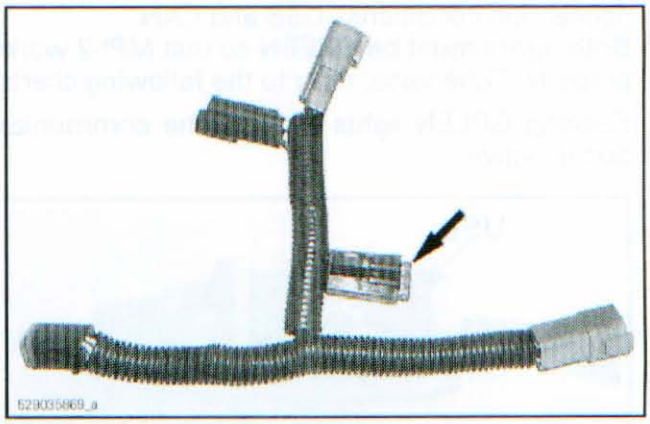

2. Vehicle battery voltage.
   2.1 Charge battery if it is too low.
3. Battery power between pins 5 and 3 of vehicle diagnostic connector.

www.midwestmanuals.com

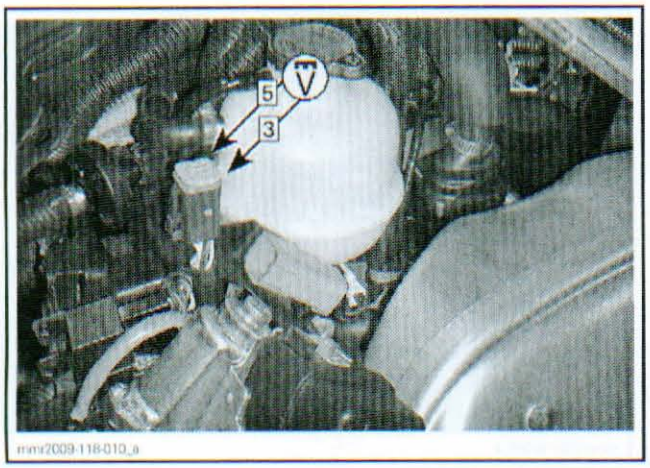

mmr2009-118-010_a

3.1 If battery voltage is not read, check vehicle wiring harness.

4. Wiring and connectors of the T-harness.

T-HARNESS CONTINUITY TEST			
"DPI" CONNECTOR	"DIAG" CONNECTOR	FUNCTION	TEST
1	1	CAN line	Continuity (close to 0 Ω)
2	2	CAN line	
3	3	Ground	
4	4	None	N.A.
5	5	Vehicle battery	Continuity (close to 0 Ω)
6	6	None	N.A.

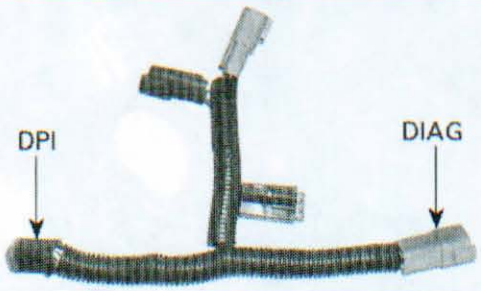

5. Diode in the T-harness.

T-HARNESS DIODE TEST		
"DIAG" CONNECTOR		
FROM	TO	TEST
5	4	Close to 0.5 V

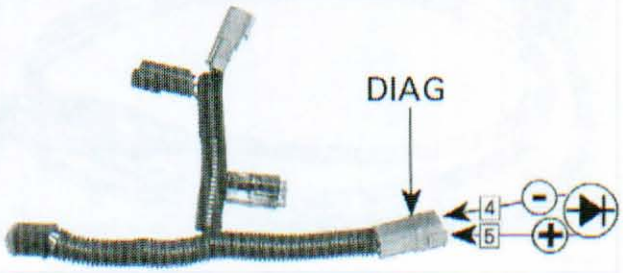

4	5	Open

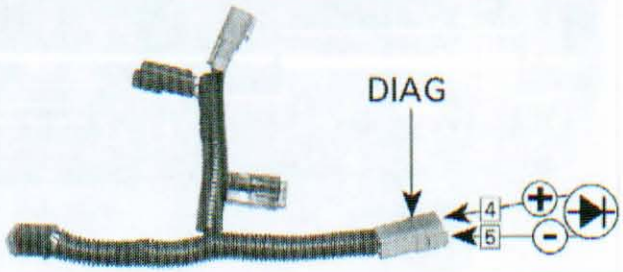

Notes:
Set multimeter to ⊣

Probe diode paying attention to proper polarity. The + sign indicates the RED probe.

PROCEDURES

MULTI-PURPOSE INTERFACE-2 (MPI-2)

The MPI-2 (Multi-Purpose Interface-2) is used with B.U.D.S. software to communicate with the ECM (engine control module) and other modules such as the multifunction gauge.

MPI-2 Connections with Vehicle

Connect the MPI-2 INTERFACE CARD (P/N 529 036 018) to the USB port of a PC (personal computer).

www.midwestmanuals.com

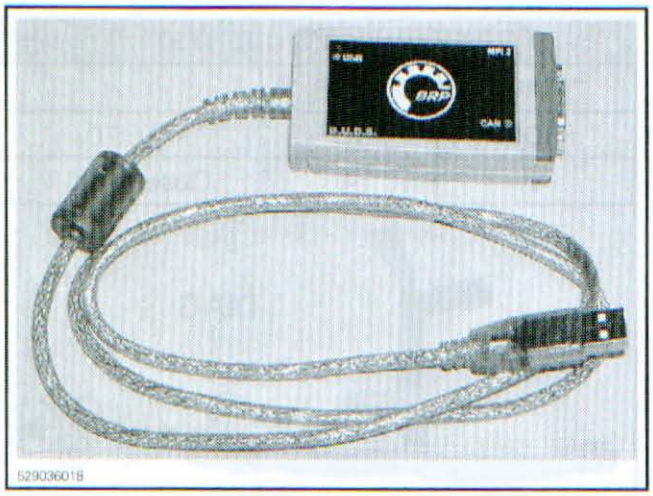

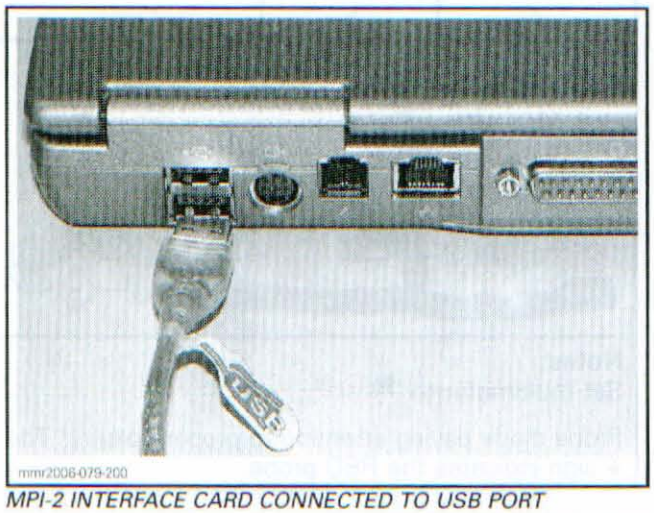

MPI-2 INTERFACE CARD CONNECTED TO USB PORT

⚠ WARNING

If the computer you are using is connected to the power outlet, there is a potential risk of electrocution when working in contact with water. Be careful not to touch water while working with the computer.

Remove the diagnostic connector from the protective cap on the right side of the vehicle.

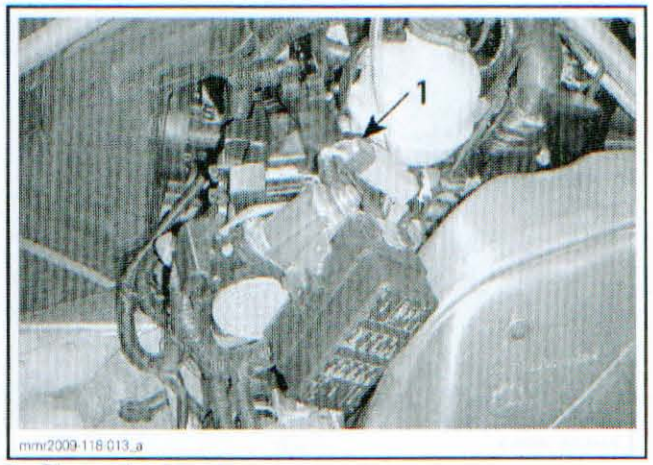

1. Diagnostic connector

Connect the T-HARNESS (P/N 529 035 869) to vehicle diagnostic connector.

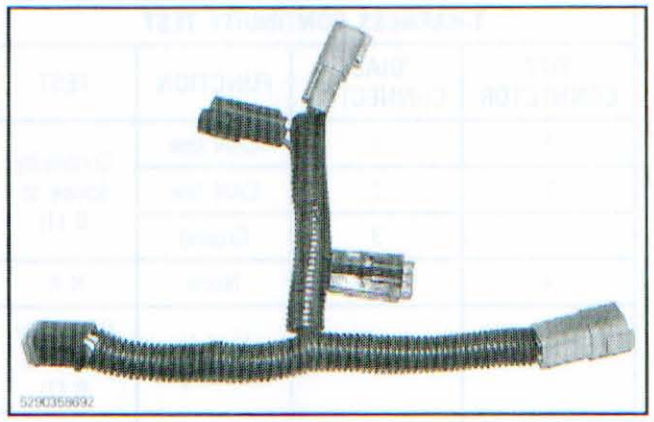

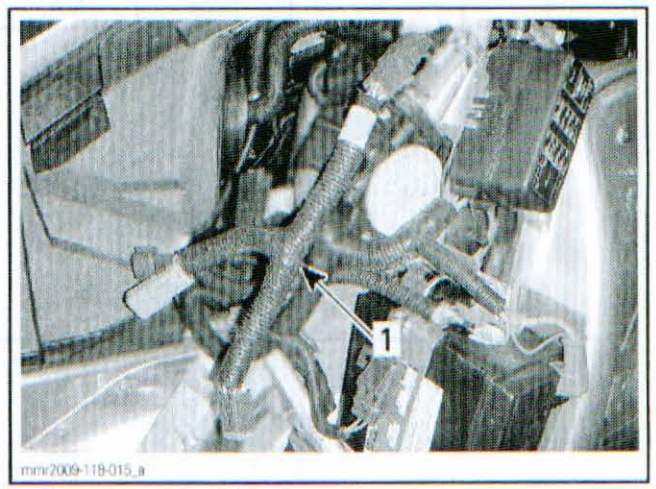

1. T-harness connected to diagnostic connector

NOTICE Connecting MPI-2 directly to diagnostic connector (without T-harness) may prevent proper communication. Always use the T-harness.

www.midwestmanuals.com

Connections to Program or Erase D.E.S.S. Key with B.U.D.S.

Connect the D.E.S.S. POST INTERFACE (P/N 529 036 019) to T-harness connector.

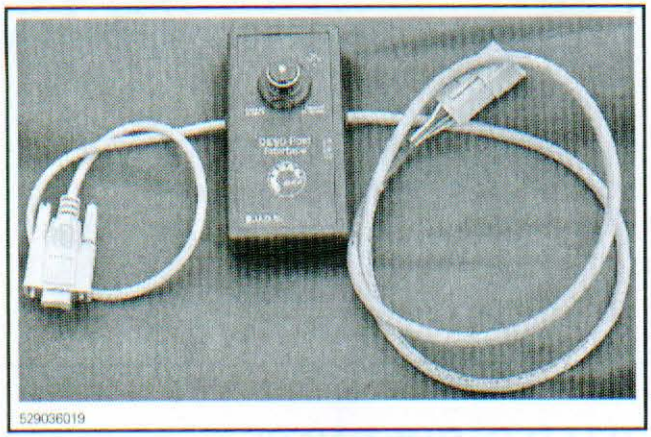

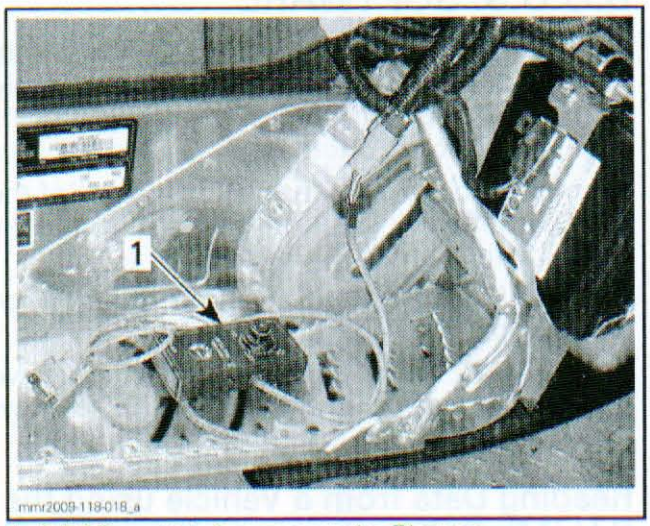

1. D.E.S.S. post interface connected to T-harness

Connect the D.E.S.S. post interface to the MPI-2 interface card.

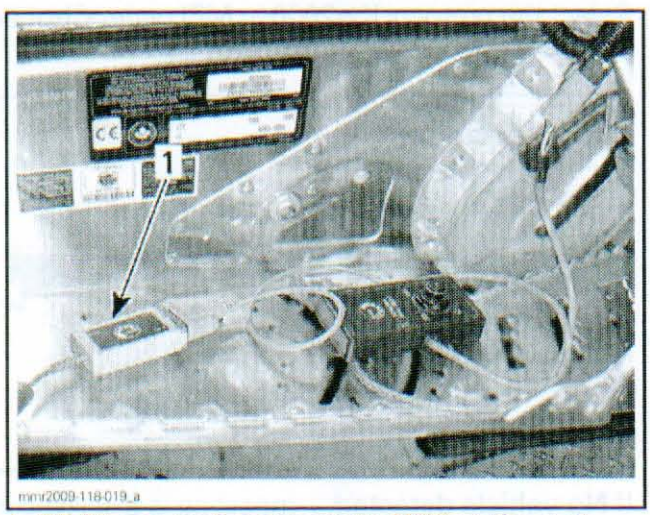

1. D.E.S.S. post interface connected to MPI-2 interface card

NOTE: An optional MALE-FEMALE EXTENSION SERIAL CABLE (P/N DB9) available at electronic retail outlets can be used. Do not exceed 7.6 m (25 ft).

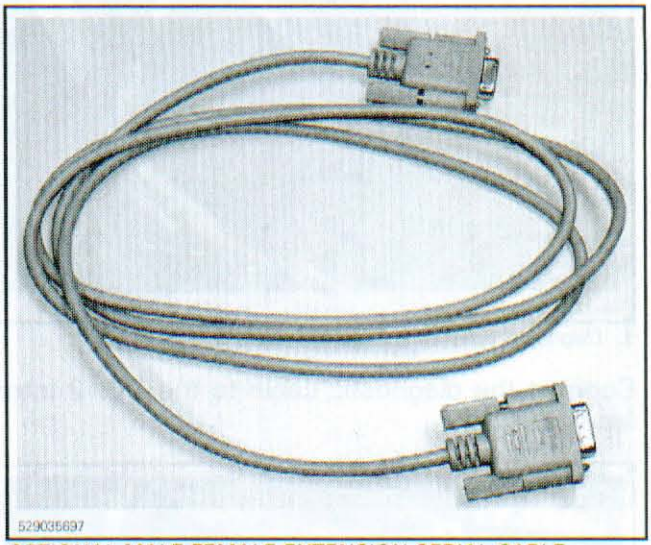

OPTIONAL MALE-FEMALE EXTENSION SERIAL CABLE

Connections for Data Entry or Troubleshooting with B.U.D.S.

NOTICE Do not use the D.E.S.S. post interface for data entry or troubleshooting.

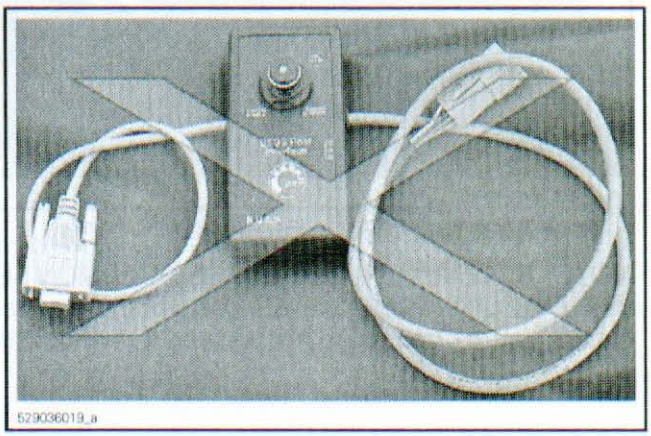

Connect the MPI-2 DIAGNOSTIC CABLE (P/N 710 000 851) to T-harness connector.

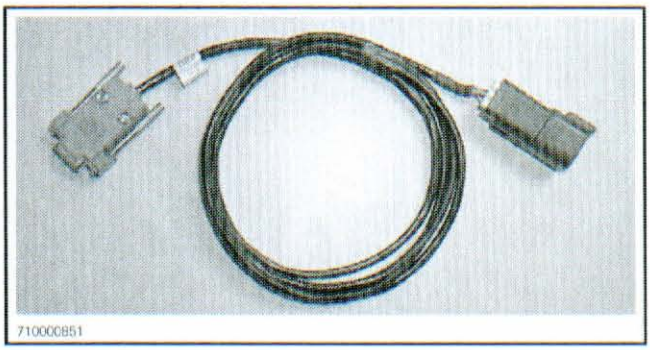

www.midwestmanuals.com

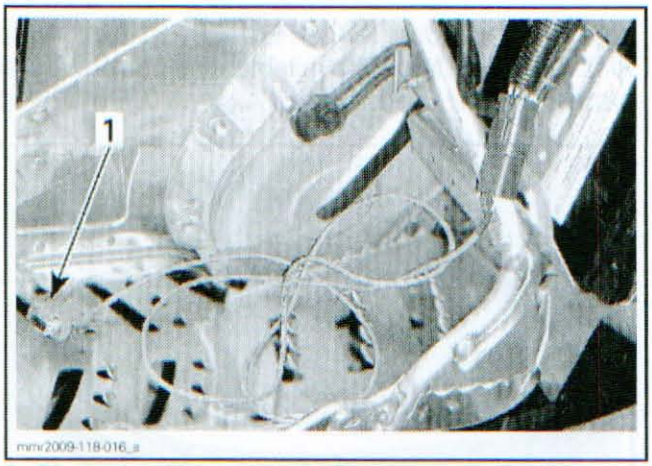

1. Diagnostic cable connected to T-harness

Connect the diagnostic cable to the MPI-2 interface card.



1. Diagnostic cable connected to the MPI-2 interface card

NOTE: An optional MALE-FEMALE EXTENSION SERIAL CABLE (P/N DB9) available at electronic retail outlets can be used. Do not exceed 7.6 m (25 ft).

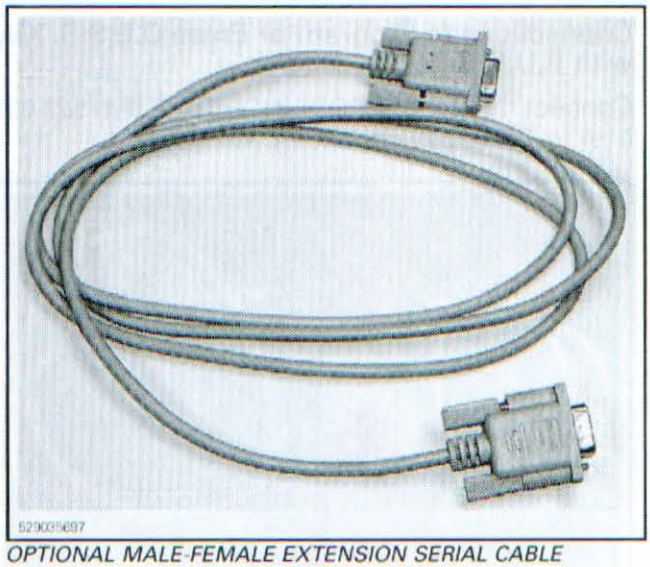

OPTIONAL MALE-FEMALE EXTENSION SERIAL CABLE

B.U.D.S. SOFTWARE

B.U.D.S. (Bombardier Utility and Diagnostic Software) is designed to allow electrical component inspection, diagnostic options and adjustments such as the closed throttle.

For more information pertaining to the use of the B.U.D.S. software, use its help which contains detailed information on its functions.

Use the latest B.U.D.S. version available on BOSSWeb.

IMPORTANT: Make sure all connections have been made **before starting B.U.D.S.** to allow proper operation.

Reading Data from a Vehicle using the B.U.D.S. Software

Install D.E.S.S. key on its post.

Start B.U.D.S. and logon.

Select the protocol **Kw2000** in **MPI** under **Choose protocol**.

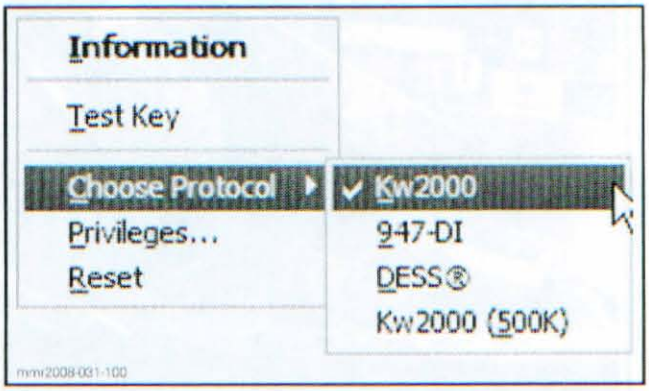

If **No vehicle detected...** message is displayed in B.U.D.S.:

www.midwestmanuals.com

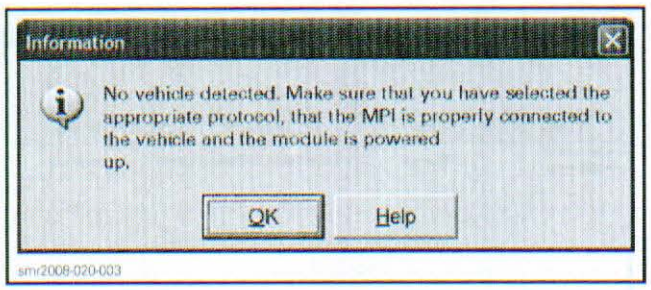

Make sure both USB and CAN lights of MPI-2 are GREEN. Otherwise, refer to *TROUBLESHOOTING* in this section.

Make sure the status bar shows the kW2000 and the number 2 to its right. Otherwise, refer to *TROUBLESHOOTING* in this section.

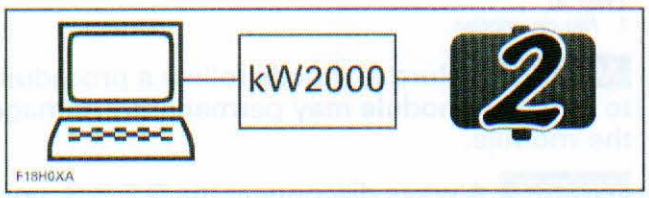

CONNECTION SUCCESSFUL

NOTE: Number 2 indicates that the ECM and the multifunction gauge are recognized by the MPI.

Read ECM by clicking the **Read Data** button.

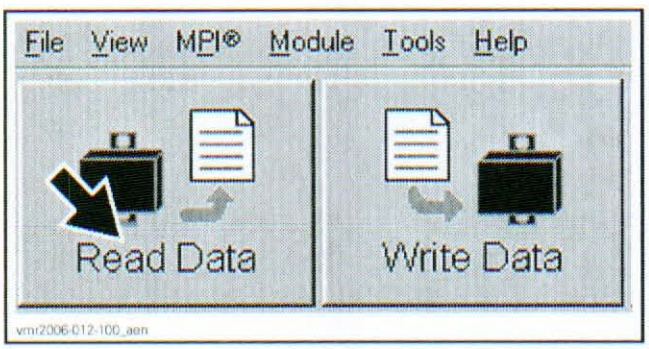

Writing Data Changes in ECM

When finished, save new data in ECM by clicking the **Write Data** button.

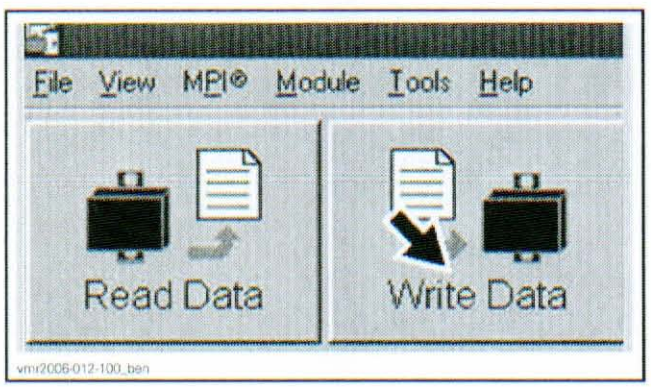

Anytime a change is brought in ECM through B.U.D.S., there will be an ECM Tracking box that will say **Remove key from vehicle....**

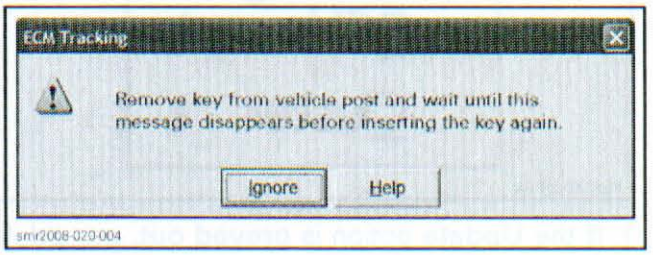

When this occurs, remove D.E.S.S. key and wait until the message disappears (it lasts approximately 20 seconds after key removal).

Disconnect MPI connections and reconnect the 6-pin connector in its protective cap.

NOTICE Failure to secure the diagnostic connector in its protective cap would allow corrosion and damage to the terminals.

NOTE: There is a 120 Ω resistor in protective cap to minimize the possibility of communication error.

Electronic Modules ("ECU") Update

Whenever B.U.D.S. is started, check if there is an update icon in B.U.D.S. status bar.

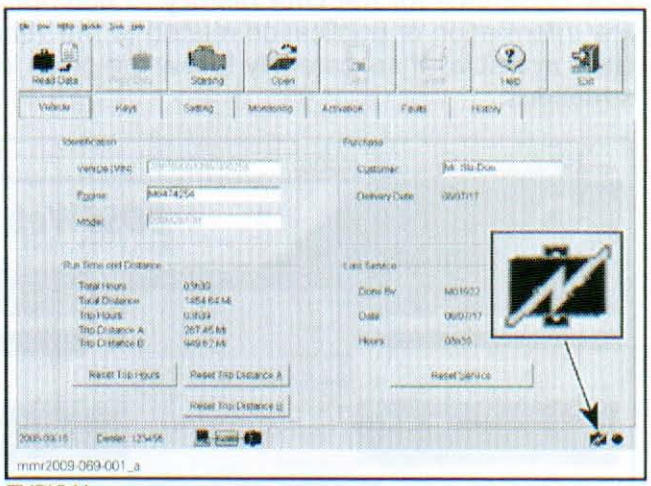

TYPICAL

The icon indicates that a file is available in B.U.D.S. to update any of the following electronic modules: ECM or multifunction gauge.

Use the **Module** menu and check all modules one at a time.

www.midwestmanuals.com

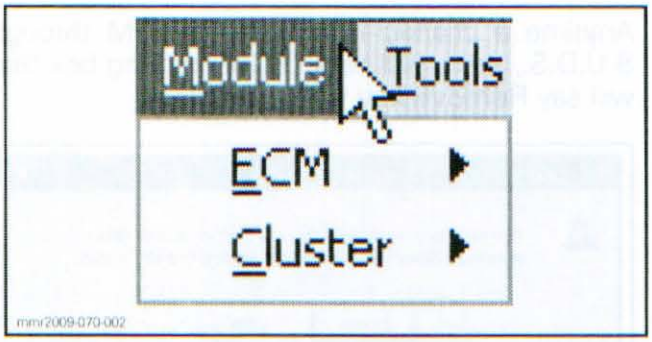

1. If the **Update** option is **greyed out**, no update file is available for this module.
2. If the **Update** option is **black**, an update file is available for this module.

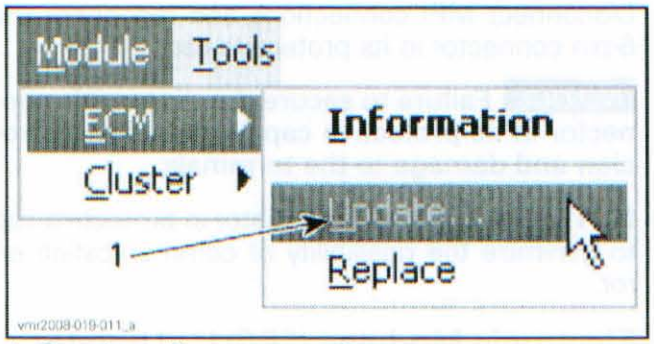

1. Greyed out: No update to perform
Black: Update file available

Before applying an update, log in BOSSWeb and look in **Service** for the **Unit history** to find out if any information or publication related to the vehicle is available. If so, carefully follow the given instructions.

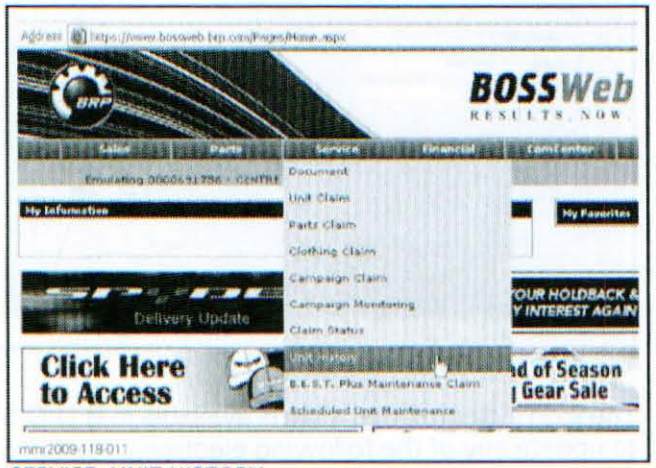

SERVICE, UNIT HISTORY

NOTE: When selecting the update menu in B.U.D.S., a dialog box will appear and the update file description may give some clue to find the vehicle-related information in BOSSWeb.

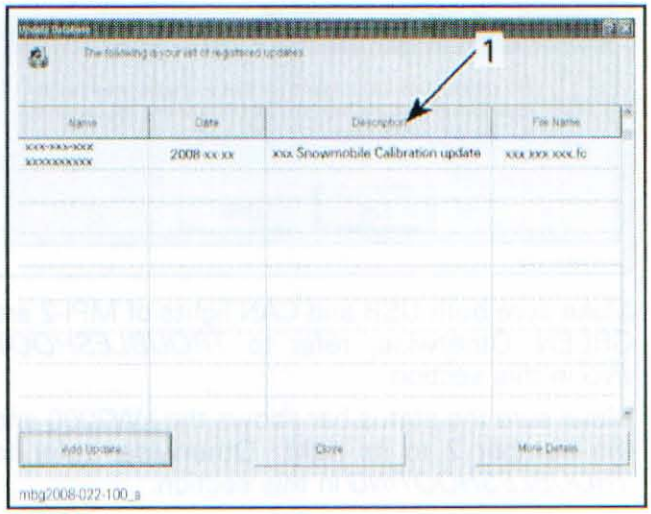

TYPICAL
1. File description

NOTICE Failure to strictly follow a procedure to update a module may permanently damage the module.

NOTICE Always disconnect the D.E.S.S. post interface before updating any module.

www.midwestmanuals.com

MONITORING SYSTEM/FAULT CODES

GENERAL

MONITORING SYSTEM

The EMS features a monitoring system that self-diagnose its electronic components.

When a predefined condition (engine overheat for example) or a fault occurs, the ECM sends a signal to the multifunction gauge and/or audible signals to a beeper to inform you of this particular condition.

The ECM monitors the following functions and components.

COMPONENT
EMS (TPS, CPS, CAPS, MAPTS, OPS, CTS, RVPS, IACV, ignition coils and fuel injectors)
12 V low/high voltage and overload
D.E.S.S.
Relays (R1 and R2)
Electronic reverse relays
Engine oil pressure
Engine RPM
Coolant temperature
CAN
ECM
Starter solenoid
Fuel pump

Engine Overheat Protection

COOLANT TEMP.	ENGINE OPERATING CONDITION	EMS ACTION
Above 70°C (158°F)	Idling more than 5 minutes	Engine is stopped. 5 seconds before stopping engine: • Beeper is activated. • SHUTDOWN is displayed in multifunction gauge.
Within 111°C (232°F) and 117°C (243°F)	Idling less than 5 minutes	Beeper is activated. Temperature light is turned ON. ENGINE_TEMP is displayed in multifunction gauge.
Above 110°C (230°F)	Riding	
Above 118°C (244°F)	Idling more than 30 seconds	Engine is stopped. 5 seconds before stopping engine: • Beeper is activated. • SHUTDOWN is displayed in multifunction gauge.
	Riding	Beeper is activated. Temperature light is turned ON. ENGINE_TEMP is displayed in multifunction gauge. Check engine light is turned ON. Engine speed is limited to 5500 RPM. A fault code is set.

Limp Home Mode

The ECM may automatically set default parameters to ensure the safe operation of the vehicle if a component of the engine management system is not operating properly.

NOTE: Sensor failures will not lead automatically to a limp home mode. The check engine LED will turn on and in some cases the beeper.

The engine RPM may be limited if some critical components fail. In this case, releasing throttle and letting the engine returning to idle speed may allow normal operation to come back. If it does not work, try removing the D.E.S.S. key, wait until multifunction gauge turns off then reinstall D.E.S.S. key.

These performance-reduced modes allow the rider to go back home while minimizing the risk of a complete power loss due to engine failure.

EMS ACTION	CAUSE
Engine speed is limited to 4500 RPM	TPS (throttle position sensor) connector is disconnected or faulty. IACV (idle air control valve) connector is disconnected or faulty. Low engine oil pressure.
Engine speed is limited to 8500 RPM	Maximum engine RPM allowed.
Engine power is reduced	Transmission is set to reverse.

www.midwestmanuals.com

Pilot Lamps

Warning lights in multifunction gauge and/or a beeper provide signals as vehicle operation feedback or to indicate a problem.

Pilot lamp can flash alone or in combination with another lamp.

Beeper codes will be heard and messages will be displayed to catch your attention.

NOTE: Message display is not available on all gauges.

PILOT LAMP(S) ON	BEEPER	MESSAGE DISPLAY (1)	DESCRIPTION
	4 short beeps every 2 minutes	LOW OIL	Low engine oil pressure.
	3 short beeps	REV. FAIL	Gear change has not occurred after pressing START/RER button, try again.
	4 short beeps	ENGINE_TEMP	Engine is overheating.
 	4 short beeps every 2 minutes	LOW BAT HIGH BAT	Low or high battery voltage condition.
	4 short beeps	CHECK ENGINE	Engine fault.
	4 short beeps every 2 minutes	LIMP HOME	Engine RPM limited for engine protection when certain faults occur.
	Continuous short beeps	SHUTDOWN	Engine shutdown due to extented engine idling time.
—	—	COMMUNICATION	Communication problem between ECM and gauge. Stop engine, remove D.E.S.S. key and wait until multifunction gauge turns off. Restart engine.
	—	THROTTLE OPEN	Throttle applied while attempting an engine start (engine will not crank). Release throttle while starting.

(1) Premium multifunction gauge only.

FAULT CODES

A fault code is an indication that a glitch or malfunction is detected by the monitoring system of the vehicle.

When there is a problem, the EMS (engine management system) can provide fault codes to ease the troubleshooting.

The faults registered in the ECM (engine control module) are kept when the battery is disconnected.

Fault codes are broadcasted to the CAN bus and can be displayed in B.U.D.S. or in the premium multifunction gauge.

Many fault codes at the same time is likely to be caused by burnt fuse(s), a faulty relay or a problem with the vehicle wiring harness.

When using the service action suggested in the **Fault** section of B.U.D.S., a system circuit referred to as 3-DA-26 for instance, means connector "A" on the ECM and the pin 26.

IMPORTANT: After a problem has been solved, ensure to clear the fault(s) in the ECM using the B.U.D.S. software. This will properly reset their states.

www.midwestmanuals.com

How to Read Fault Codes Using B.U.D.S. Software

Refer to *COMMUNICATION TOOLS/B.U.D.S. SOFTWARE* section.

For more information pertaining to the faults code status and report, refer to B.U.D.S. online help or to the EMS fault code tables.

How to Read Fault Codes on the Premium Multifunction Gauge

Fault codes can also be displayed in the premium multifunction gauge. Refer to *LIGHTS, GAUGE AND ACCESSORIES*.

SPECIFIC FAULT CODES

The following gives additional information related to specific fault codes.

Fault Code P0339

This code could occur if the CPS picked up some electromagnetic interference from the magneto rotor.

The engine will not start or it may start and run but will hesitate when depressing throttle lever.

Test the CPS as described in *ELECTRONIC FUEL INJECTION*. If CPS tested good, try a new magneto rotor.

www.midwestmanuals.com

FAULT CODE TABLES

FAULT CODE	DESCRIPTION	CAUSE	ACTION
P0107	Air pressure sensor voltage too low.	Damaged circuit wires, damaged or disconnected sensor, sensor shorted to ground.	Make sure sensor's connector is fully inserted. Check for approximately 5 volts between MAPTS sensor pins 1 and 3. Check MAPTS sensor pin 1 circuit for resistivity to ground. Check for circuits continuity from ECM to MAPTS connector (refer to the shop manual for wiring diagram).
P0108	Air pressure sensor voltage too high.	Damaged circuit wires, damaged or disconnected sensor, sensor shorted to a supply.	Make sure sensor's connector is fully inserted. Check for approximately 5 volts between MAPTS sensor pins 1 and 3. Check MAPTS sensor pin 1 circuit for resistivity to ground. Check for circuits continuity from ECM to MAPTS connector (refer to the shop manual for wiring diagram).
P0111	Air temperature sensor functional problem.	Intermittent air temperature sensor reading or circuit wires shorted to ground.	Make sure sensor's connector is fully inserted. Check MAPTS sensor pin 1 circuit for resistivity to ground. Check for circuits continuity from ECM to MAPTS connector (refer to the shop manual for wiring diagram).
P0112	Air temperature sensor voltage too low.	Air temperature sensor or circuit wires shorted to ground.	Make sure sensor's connector is fully inserted. Disconnect the sensor and check for a change in the fault code. If the fault code stays the same, look for a short circuit on the harness. Check MAPTS pins 1 and 2 for approximately 2280 to 2736 ohms at 19 to 21°C (66 to 70°F). Check for circuits continuity from ECM to MAPTS connector (refer to the shop manual for wiring diagram). Check MAPTS sensor pin 1 circuit for resistivity to ground.
P0113	Air temperature sensor voltage too high.	Disconnected sensor or sensor's resistance too high.	Make sure sensor's connector is fully inserted. Disconnect the sensor and check for a change in the fault code. If the fault code stays the same, look for a short circuit on the harness. Check MAPTS pins 1 and 2 for approximately 2280 to 2736 ohms at 19 to 21°C (66 to 70°F). Check for circuits continuity from ECM to MAPTS connector (refer to the shop manual for wiring diagram). Check MAPTS sensor pin 1 circuit for resistivity to ground.
P0116	Engine temperature sensor functional problem.	Intermittent engine temperature sensor reading or circuit wires shorted to ground.	Make sure sensor's connector is fully inserted. Check CTS pins for approximately 2280 to 2736 ohms at 19 to 21°C (66 to 70°F). Check for continuity all circuits from ECM to CTS connector (refer to the shop manual for wiring diagram). Check CTS pin 1 circuits for resistivity to ground.

www.midwestmanuals.com

FAULT CODE	DESCRIPTION	CAUSE	ACTION
P0117	Engine temperature sensor voltage too low.	Engine temperature sensor or circuit wires shorted to ground.	Make sure sensor's connector is fully inserted. Disconnect the sensor and check for a change in the fault code. If the fault code stays the same, look for a short circuit on the harness. Check CTS pins for approximately 2280 to 2736 ohms at 19 to 21°C (66 to 70°F). Check for continuity all circuits from ECM to CTS connector (refer to the shop manual for wiring diagram). Check circuit of CTS pin 1 for resistivity to ground.
P0118	Engine temperature sensor voltage too high.	Disconnected sensor or sensor's resistance too high.	Make sure sensor's connector is fully inserted. Disconnect the sensor and check for a change in the fault code. If the fault code stays the same, look for a short circuit on the harness. Check CTS pins for approximately 2280 to 2736 ohms at 19 to 21°C (66 to 70°F). Check for continuity all circuits from ECM to CTS connector (refer to the shop manual for wiring diagram). Check circuit of CTS pin 1 for resistivity to ground.
P0122	Throttle position sensor voltage too low.	Damaged circuit wires, damaged throttle position sensor or damaged ECM pins.	Make sure sensor's connector is fully inserted. Check for approximately 5 volts between TPS pins 1 and 2. Check for continuity all circuits from ECM to TPS connector (refer to the shop manual for wiring diagram). Refer to the shop manual for complete throttle position sensor testing procedure.
P0123	Throttle position sensor voltage too high.	Damaged circuit wires, damaged throttle position sensor or damaged ECM pins.	Make sure sensor's connector is fully inserted. Check for approximately 5 volts between TPS pins 1 and 2. Check for continuity all circuits from ECM to TPS connector (refer to the shop manual for wiring diagram). Refer to the shop manual for complete throttle position sensor testing procedure.
P0231	Fuel pump open circuit or shorted to ground.	Blown fuse, damaged or disconnected fuel pump, damaged circuit wires, damaged connectors or damaged ECM output pins.	Make sure fuel pump connector is fully inserted. Check fuse F2. Check for approximately 1 ohm between fuel pump connector pins. Check for approximately 12 volts between harness connector pin PE-2 and ground. Check for continuity from ECM to Fuel pump connector and fuse F2 to Fuel pump connector (refer to the shop manual for wiring diagram). Check if system circuit fuel pump pin 1 is shorted to 12 V.

www.midwestmanuals.com

FAULT CODE	DESCRIPTION	CAUSE	ACTION
P0232	Fuel pump shorted to battery.	Damaged fuel pump, damaged circuit wires, damaged connectors or damaged ECM output pins.	Make sure fuel pump connector is fully inserted. Check fuse F2. Check for approximately 1 ohm between fuel pump connector pins. Check for approximately 12 volts between harness connector pin PE-2 and ground. Check for continuity from ECM to Fuel pump connector and fuse F2 to Fuel pump connector (refer to the shop manual for wiring diagram). Check if system circuit fuel pump pin 1 is shorted to 12 V.
P0261	Injector cylinder #1 (PTO) open circuit or shorted to ground.	Blown fuse, damaged or disconnected injector, damaged or disconnected circuit wires, damaged ECM output pins.	Check fuses F3, F4 and F5. Check connections on injector. Check for approximately 14.5 ohms on injector. Check connector HIC connecting the two harnesses together. Check for continuity from ECM to Injector connector and injector to fuse (refer to the shop manual for wiring diagram). Check if system circuit injector pin 2 is shorted to 12 V.
P0262	Injector cylinder #1 (PTO) shorted to battery.	Damaged injector, damaged circuit wires, damaged connector or damaged ECM output pins.	Check fuses F3, F4 and F5. Check connections on injector. Check for approximately 14.5 ohms on injector. Check connector HIC connecting the two harnesses together. Check for continuity from ECM to injector connector and injector to fuse (refer to the shop manual for wiring diagram). Check if system circuit injector pin 2 is shorted to 12 V.
P0264	Injector cylinder #2 (CTR) open circuit or shorted to ground.	Blown fuse, damaged or disconnected injector, damaged or disconnected circuit wires, damaged ECM output pins.	Check fuses F3, F4 and F5. Check connections on injector. Check for approximately 14.5 ohms on injector. Check connector HIC connecting the two harnesses together. Check for continuity from ECM to injector connector and injector to fuse (refer to the shop manual for wiring diagram). Check if system circuit injector pin 2 is shorted to 12 V.
P0265	Injector cylinder #2 (CTR) shorted to battery.	Damaged injector, damaged circuit wires, damaged connector or damaged ECM output pins.	Check fuses F3, F4 and F5. Check connections on injector. Check for approximately 14.5 ohms on injector. Check connector HIC connecting the two harnesses together. Check for continuity from ECM to injector connector and injector to fuse (refer to the shop manual for wiring diagram). Check if system circuit injector pin 2 is shorted to 12 V.

www.midwestmanuals.com

FAULT CODE	DESCRIPTION	CAUSE	ACTION
P0267	Injector cylinder #3 (MAG) open circuit or shorted to ground.	Blown fuse, damaged or disconnected injector, damaged or disconnected circuit wires, damaged ECM output pins.	Check fuses F3, F4 and F5. Check connections on injector. Check for approximately 14.5 ohms on injector. Check connector HIC connecting the two harnesses together. Check for continuity from ECM to injector connector and injector to fuse (refer to the shop manual for wiring diagram). Check if system circuit injector pin 2 is shorted to 12 V.
P0268	Injector cylinder #3 (MAG) shorted to battery.	Damaged injector, damaged circuit wires, damaged connector or damaged ECM output pins.	Check fuses F3, F4 and F5. Check connections on injector. Check for approximately 14.5 ohms on injector. Check connector HIC connecting the two harnesses together. Check for continuity from ECM to Injector connector and injector to Fuse (refer to the shop manual for wiring diagram). Check if system circuit Injector pin 2 is shorted to 12 V.
P0336	High engine RPM detected.	CPS signal not plausible, damaged circuit wires, damaged connector or damaged tooth wheel.	Check for 775 to 950 ohms between CPS pins connector. Check for 2 volts AC between terminals DA-5 and DA-19 of ECM connector while cranking the engine.
P0339	Crankshaft signal fault.	CPS signal not plausible, damaged circuit wires, damaged connector or damaged tooth wheel.	Check for 775 to 950 ohms between CPS pins connector. Check for 2 volts AC between terminals DA-5 and DA-19 of ECM connector while cranking the engine.
P0344	Cam sensor signal missing.	Blown fuse, damaged circuit wires or damaged sensor.	Check fuse F2. Check for 12 volts between sensor's connector pins 1 and 3. Check connector HIC connecting the two harnesses together. Check for continuity from ECM to CAPS connector and fuse F2 to CAPS (refer to the shop manual for wiring diagram).
P0351	No ignition output cylinder #1 (PTO).	Blown fuse, damaged circuit wires, damaged connector, damaged or disconnected ignition coil.	Check fuses F3, F4 and F5. Check for approximately 12 volts on terminal 1 of ignition coil connector. Check connector HIC connecting the engine harness to the vehicle harness. Check for continuity from ECM to ignition coil terminal 3 (refer to the shop manual for wiring diagram). Refer to the shop manual for detailed ignition coil testing procedure.

www.midwestmanuals.com

FAULT CODE	DESCRIPTION	CAUSE	ACTION
P0352	No ignition output cylinder #2 (CTR).	Blown fuse, damaged circuit wires, damaged connector, damaged or disconnected ignition coil.	Check fuses F3, F4 and F5. Check for approximately 12 volts on terminal 1 of ignition coil connector. Check connector HIC connecting the engine harness to the vehicle harness. Check for continuity from ECM to ignition coil terminal 3 (refer to the shop manual for wiring diagram). Refer to the shop manual for detailed ignition coil testing procedure.
P0353	No ignition output cylinder #3 (MAG).	Blown fuse, damaged circuit wires, damaged connector, damaged or disconnected ignition coil.	Check fuses F3, F4 and F5. Check for approximately 12 volts on terminal 1 of ignition coil connector. Check connector HIC connecting the engine harness to the vehicle harness. Check for continuity from ECM to ignition coil terminal 3 (refer to the shop manual for wiring diagram). Refer to the shop manual for detailed ignition coil testing procedure.
P0480	Fan relay shorted to battery.	Blown fuse, damage fan relay, disconnected fan relay harness, damaged circuit wires, damage or disconnected pins or damage ECM output pin.	Check fuse F11. Check for disconnected fan relay or disconnected fan harness connectors. Check for approximately 12 volts between fan relay terminal #30 or #85 and engine ground. Check for continuity to ground from FAN connector to engine ground. Check for continuity from ECM to fan harness connector (refer to the shop manual for wiring diagram).
P0480	Fan relay open circuit or shorted to ground.	Blown fuse, damage fan relay, disconnected fan relay harness, damaged circuit wires, damage or disconnected pins or damage ECM output pin.	Check fuse F11. Check for disconnected fan relay or disconnected fan harness connectors. Check for approximately 12 volts between fan relay terminal #30 or #85 and engine ground. Check for continuity to ground from FAN connector to engine ground. Check for continuity from ECM to fan harness connector (refer to the shop manual for wiring diagram).
P0505	IACV output stage cutoff memory difference.	Damaged actuator, damaged circuit wires, damaged connector or damaged ECM output pins.	Check for approximately 50 ohms between pins A and D and also between pins B and C of the idle air control valve. Check for damaged circuit wires. Check for continuity from ECM to IACV connector (refer to the shop manual for wiring diagram). Check for damaged connector or damaged ECM output pins.

www.midwestmanuals.com

FAULT CODE	DESCRIPTION	CAUSE	ACTION
P0505	IACV output stage fault.	Damaged actuator, damaged circuit wires, damaged connector or damaged ECM output pins.	Check for approximately 50 ohms between pins A and D and also between pins B and C of the idle air control valve. Check for damaged circuit wires. Check for continuity from ECM to IACV connector (refer to the shop manual for wiring diagram). Check for damaged connector or damaged ECM output pins.
P0520	Oil pressure switch functional problem.	Oil pressure switch open circuit or disconnected.	Check oil pressure switch resistance. With engine stopped, the resistance should be less than 1 ohm. With engine running, the resistance should be infinitely high (0L). Check for continuity from ECM to oil pressure switch (refer to the shop manual for wiring diagram).
P0562	Battery voltage too low.	Battery failure, rectifier failure, damaged circuit wires or connection, damaged AC generator.	Check battery voltage for 11 to 13 volts with engine stopped. Check battery voltage for 13.5 to 14.5 volts with engine speed above 2500 RPM. Check connections on regulator. Check for loose or broken ring terminals on regulator. Check ground and positive connections near the starter solenoid.
P0563	Battery voltage too high.	Damaged regulator. An external battery charger may have been used.	Check battery voltage for 11 to 13 volts with engine stopped. Check battery voltage for 14.0 to 14.5 volts with engine idling. Check connections on regulator. Check for loose or broken ring terminals on regulator. Check ground and positive connections near the starter solenoid.
P0601	Internal ECM error or TPS learn unlikely.	Wrong throttle position during reset of closed throttle and idle actuator	Check cable adjustment. Check idle stop for wear. Make sure throttle plate is against throttle stop. Reset closed TPS. Refer to the shop manual for detailed reset closed throttle and idle actuator procedure.
P0601	Internal ECM error or TPS learn unlikely.	ECM internal error	Try updating the ECM. If the problem persists, try replacing the ECM.
P0602	ECM not coded.	Damaged ECM or faulty programming.	Try updating the ECM. If the problem persists, try replacing the ECM.
P0604	ECM RAM fault.	Damaged ECM or faulty programming.	Try updating the ECM. If the problem persists, try replacing the ECM.
P0605	ECM EEPROM fault.	Damaged ECM or faulty programming.	Try updating the ECM. If the problem persists, try replacing the ECM.
P0605	ECM EEPROM fault.	Damaged ECM or faulty programming.	Try updating the ECM. If the problem persists, try replacing the ECM.

www.midwestmanuals.com

FAULT CODE	DESCRIPTION	CAUSE	ACTION
P0605	ECM EEPROM fault.	Damaged ECM or faulty programming.	Try updating the ECM. If the problem persists, try replacing the ECM.
P0605	ECM EEPROM fault.	Damaged ECM or faulty programming.	Try updating the ECM. If the problem persists, try replacing the ECM.
P0605	ECM EEPROM fault.	Damaged ECM or faulty programming.	Try updating the ECM. If the problem persists, try replacing the ECM.
P0608	Sensor's power supply voltage too low.	Damaged circuit wires, shorted air pressure sensor or shorted TPS.	Check for continuity from ECM to MAPTS connector and ECM to TPS connector (refer to the shop manual for wiring diagram).
P0608	Sensor's power supply voltage too low.	Damaged circuit wires, shorted air pressure sensor or shorted TPS.	Check for continuity from ECM to MAPTS connector and ECM to TPS connector (refer to the shop manual for wiring diagram).
P0616	Starter solenoid open circuit or shorted to ground.	Blown fuse, damaged or disconnected starter solenoid, damaged circuit wires, damaged connectors or damaged ECM output pins.	Check fuse F2 and fuse 30 A. Disconnect the starter solenoid and check for approximately 7.3 ohms between the small starter solenoid terminals. Check for approximately 12 volts between starter solenoid RD wire and ground. Check for continuity from ECM to starter solenoid (refer to the shop manual for wiring diagram).
P0617	Starter solenoid shorted to battery.	Blown fuse, damaged or disconnected starter solenoid, damaged circuit wires, damaged connectors or damaged ECM output pins.	Check fuse F2 and fuse 30 A. Disconnect the starter solenoid and check for approximately 7.3 ohms between the small starter solenoid terminals. Check for approximately 12 volts between starter solenoid RD wire and ground. Check for continuity from ECM to starter solenoid (refer to the shop manual for wiring diagram).
P0736	E-Reverse plausibility error.	Blown fuse, wrong belt adjustment, DC motor damaged, reverse switch disconnected, relay damaged or disconnected, damaged circuit wires, damaged connectors or damaged ECM output pins.	Check fuse F8. Check for belt adjustment as per specification (refer to the shop manual). Make sure reverse position switch is connected. Make sure reverse harness and DC motor connector is fully inserted. Check connector HIC connecting the two harnesses together. Try resetting fault code faults and restart. Check for approximately 12 volt DC on relays pins 86 and 87. Check for ground on relays pin 87a. Check for continuity from ECM connectors A and B to electromechanical relays (refer to the shop manual for wiring diagram).

www.midwestmanuals.com

FAULT CODE	DESCRIPTION	CAUSE	ACTION
P0750	E-Reverse forward relay open circuit or shorted to ground.	Blown fuse, damaged or disconnected relay, damaged or disconnected circuit wires, damaged ECM output pins.	Check fuse F8. Make sure reverse harness and DC motor connector is fully inserted. Check for approximately 12 volt DC on relays pins 86 and 87. Check for ground on relays pin 87a. Check for approximately 100 ohms between coil relay pins 85 and 86. Check connector HIC connecting the two harnesses together. Check for continuity from ECM to electromechanical relays pins (refer to the shop manual for wiring diagram).
P0753	E-Reverse relay shorted to battery.	Blown fuse, damaged or disconnected relay, damaged or disconnected circuit wires, damaged ECM output pins.	Check fuse F8. Make sure reverse harness and DC motor connector is fully inserted. Check for approximately 12 volt DC on relays pins 86 and 87. Check for ground on relays pin 87a. Check for approximately 100 ohms between coil relay pins 85 and 86. Check connector HIC connecting the two harnesses together. Check for continuity from ECM to electromechanical relays pins (refer to the shop manual for wiring diagram).
P0755	E-Reverse relay open circuit or shorted to ground.	Blown fuse, damaged or disconnected relay, damaged or disconnected circuit wires, damaged ECM output pins.	Check fuse F8. Make sure reverse harness and DC motor connector is fully inserted. Check for approximately 12 volt DC on relays pins 86 and 87. Check for ground on relays pin 87a. Check for approximately 100 ohms between coil relay pins 85 and 86. Check connector HIC connecting the two harnesses together. Check for continuity from ECM to electromechanical relays pins (refer to the shop manual for wiring diagram).
P0758	E-Reverse relay shorted to battery.	Blown fuse, damaged or disconnected relay, damaged or disconnected circuit wires, damaged ECM output pins.	Check fuse F8. Make sure reverse harness and DC motor connector is fully inserted. Check for approximately 12 volt DC on relays pins 86 and 87. Check for ground on relays pin 87a. Check for approximately 100 ohms between coil relay pins 85 and 86. Check connector HIC connecting the two harnesses together. Check for continuity from ECM to electromechanical relays pins (refer to the shop manual for wiring diagram).

www.midwestmanuals.com

FAULT CODE	DESCRIPTION	CAUSE	ACTION
P1102	Throttle position sensor adaptation failure.	Wrong throttle body mechanical position during reset of closed throttle and idle actuator or no initialization after ECM replacement.	Check cable adjustment. Check idle stop for wear. Make sure throttle plate is against throttle stop. Reset closed throttle and idle actuator. Refer to the shop manual for detailed reset closed throttle and idle actuator procedure.
P1104	Throttle position sensor adaptation cancelled.	Wrong throttle body mechanical position during reset of closed throttle and idle actuator or no initialization after ECM replacement.	Check cable adjustment. Check idle stop for wear. Make sure throttle plate is against throttle stop. Reset closed TPS. Refer to the shop manual for detailed reset closed throttle and idle actuator procedure.
P1116	Engine temperature high.	Not enough cooling due to lack of snow going to the radiator. Idling for too long. Problem with cooling system. Coolant level too low.	Check cooling system, check coolant level.
P1148	Safety fuel cut off detected.	IACV not installed.	Make sure IACV connector is fully inserted in air intake silencer. Check for continuity from ECM to IACV connector (refer to the shop manual for wiring diagram). Remove D.E.S.S. and wait complete ECM shutdown.
P1520	Low oil pressure.	Low oil detected in engine.	Refer to shop manual for low oil service.
P1611	IACV output signal failed.	Damaged actuator, damaged circuit wires, damaged connector or damaged ECM output pins.	Check for approximately 50 ohms between pins A and D and also between pins B and C of the idle air control valve. Check for damaged circuit wires. Check for continuity from ECM to IACV connector (refer to the shop manual for wiring diagram). Check for damaged connector or damaged ECM output pins.
P1655	D.E.S.S.® shorted to battery.	Damaged circuit wires or mixed up connections.	Check system circuits DB-26 for continuity to terminal 1 of D.E.S.S. post connector, DB-38 for continuity to terminal 3 of D.E.S.S. post connector and DB-39 for continuity to terminal 2 of D.E.S.S. post connector. Check system circuit DB-26 for continuity to circuit DB-39 when D.E.S.S. key is installed on D.E.S.S. post. Check system circuit DB-38 for continuity to the center contact of the D.E.S.S. post connector and circuit DB39 for continuity to the outer ring of the D.E.S.S. post. Check system circuits DB-26, DB-38 and DB-39 for short to 12 volts.

www.midwestmanuals.com

FAULT CODE	DESCRIPTION	CAUSE	ACTION
P1656	D.E.S.S. line shorted to ground.	Damaged circuit wires or mixed up connections.	Check system circuits DB-26 for continuity to terminal 1 of D.E.S.S. post connector, DB-38 for continuity to terminal 3 of D.E.S.S. post connector and DB-39 for continuity to terminal 2 of D.E.S.S. post connector. Check system circuit DB-26 for continuity to circuit DB-39 when D.E.S.S. key is installed on D.E.S.S. post. Check system circuit DB-38 for continuity to the center contact of the D.E.S.S. post connector and circuit DB39 for continuity to the outer ring of the D.E.S.S. post. Check system circuits DB-26, DB-38 and DB-39 for continuity to ground.
P1675	Relay 2 shorted to battery.	Blown fuse, damaged or disconnected relay, damaged or disconnected circuit wires, damaged ECM output pins.	Check fuse F9. Check for approximately 100 ohms between coil relay pins. Check for continuity from ECM to relay (refer to the shop manual for wiring diagram).
P1676	Relay 2 open circuit or shorted to ground.	Blown fuse, damaged or disconnected relay, damaged or disconnected circuit wires, damaged ECM output pins.	Check fuse F9. Check for approximately 100 ohms between coil relay pins. Check for continuity from ECM to relay (refer to the shop manual for wiring diagram).
P1677	Relay 3 shorted to battery.	Blown fuse, damaged or disconnected relay, damaged or disconnected circuit wires, damaged ECM output pins.	Check fuse F9. Check for approximately 100 ohms between coil relay pins. Check for continuity from ECM to relay (refer to the shop manual for wiring diagram).
P1678	Relay 3 open circuit or shorted to ground.	Blown fuse, damaged or disconnected relay, damaged or disconnected circuit wires, damaged ECM output pins.	Check fuse F9. Check for approximately 100 ohms between coil relay pins. Check for continuity from ECM to relay (refer to the shop manual for wiring diagram).

www.midwestmanuals.com

www.midwestmanuals.com

ELECTRONIC FUEL INJECTION

SERVICE TOOLS

Description	Part Number	Page
DIGITAL INDUCTION TACHOMETER	529 014 500	181
ECM ADAPTER TOOL (2 CONNECTORS)	420 277 010	184, 186–187, 198, 204, 209–211
FLUKE 115 DIGITAL MULTIMETER	529 035 868	187, 196–199, 201–202, 207, 211
FUEL HOSE DISCONNECT TOOL	529 036 037	193
OETIKER PLIERS	295 000 070	201
SMALL HOSE PINCHER	295 000 076	201

SERVICE TOOLS – OTHER SUPPLIER

Description	Part Number	Page
FLUKE RIGID BACK PROBE	TP88	207

SERVICE PRODUCTS

Description	Part Number	Page
DEOXIT LUBRICANT	293 550 034	184
LOCTITE 243 (BLUE)	293 800 060	210

GENERAL

When removing or installing high pressure test equipment and disconnecting fuel line connections, follow these instructions:

- Release fuel pressure prior to removing a hose.
- Remove the main fuse to disable fuel pump.
- Cover the fuel line connection with an absorbent shop rag.
- Slowly disconnect the fuel hose to minimize spilling.
- Do not allow fuel to spill on hot parts and electrical connectors.
- Wipe up any fuel spillage in the engine compartment.

⚠ WARNING

Fuel is flammable and explosive under certain conditions. Always proceed with care and use appropriate safety equipment when working on pressurized fuel system. Wear safety glasses and work in a well ventilated area. Fuel lines remain under pressure at all times.

⚠ WARNING

After working on the fuel system, pressurize the fuel system to check for leaks. Refer to *FUEL SYSTEM PRESSURIZATION* in *FUEL TANK AND FUEL PUMP* subsection.

⚠ WARNING

After servicing a vehicle, always apply parking brake before starting engine.

SYSTEM DESCRIPTION

The ECM reads the input signals from different sensors which indicate engine operating conditions at micro-second intervals.

The ECM calculates the proper air/fuel ratio and activates the output to injectors.

Signals from sensors are used by the ECM to determine the injection parameters (fuel maps required for optimum air-fuel ratio).

The crankshaft position sensor (CPS), the throttle position sensor (TPS) are the primary sensors used to control the injection. Other sensors (like temperature sensors, etc.) are used as secondary input.

www.midwestmanuals.com

Air Induction

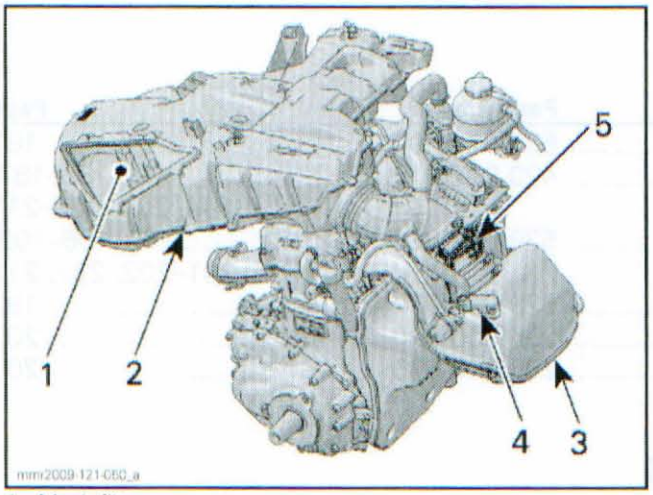

1. *Mesh filter*
2. *Air intake silencer*
3. *Intake manifold*
4. *Manifold absolute pressure and temperature sensor*
5. *Throttle body*

Air flows through a mesh filter in the air intake silencer mounted on top of engine. The mesh filter prevents snow from being drawn into the engine.

Air is then drawn through the throttle body.

Manifold absolute pressure and temperature are measured in the intake manifold.

Throttle Body

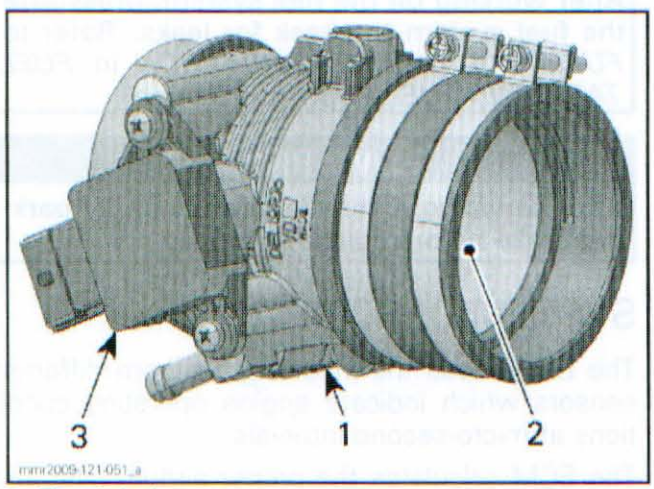

1. *Throttle body*
2. *Throttle plate*
3. *TPS (Throttle Position Sensor)*

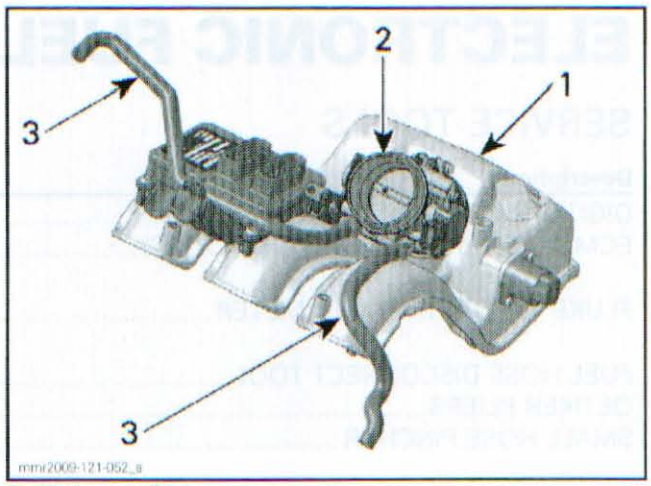

1. *Intake manifold*
2. *Throttle body*
3. *Coolant-heated lines*

The heated single 52 mm throttle body is mounted on intake manifold.

The TPS (Throttle Position Sensor) is fitted on the throttle body. The TPS sends throttle angle position to the ECM.

Engine coolant flows through throttle body to prevent potential freezing of throttle plate.

The air then continues through the intake manifold.

Idle Air Control Valve (IACV)

Since the throttle plate is closed when engine is idling, an idle air control valve (IACV) is used to allow air to bypass the throttle plate through a hose linking the intake air to the intake manifold.

Idle control is required to satisfy the varying conditions such as air temperature, altitude, engine load, etc.

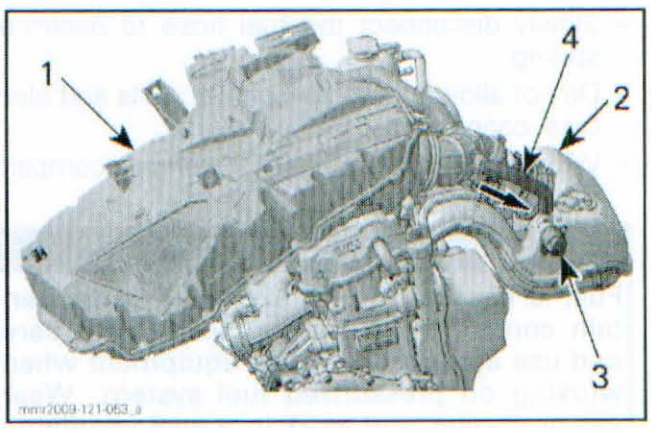

1. *Air intake silencer*
2. *Intake manifold*
3. *IACV (Idle air control valve)*
4. *Bypass hose*

www.midwestmanuals.com

The amount of opening or closing of the IACV is controlled by the ECM. As the IACV opening is increased, more air is bypassed resulting in an increased idle speed.

Intake Manifold

The intake manifold is mounted to the cylinder head inlet ports.

The air flows through the intake manifold to the intake valves to finally reach the combustion chamber.

The intake manifold also provides a support for the ECM.

Fuel Rail

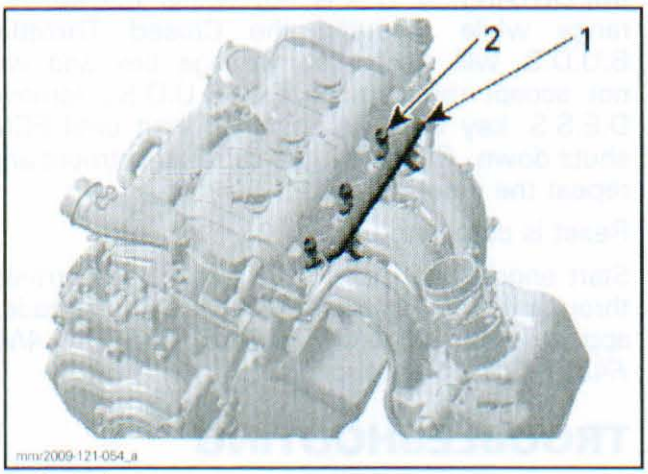

1. *Fuel rail*
2. *Fuel injector*

The fuel rail is mounted on the intake manifold. It delivers fuel to the fuel injectors. The fuel rail is fed by the fuel pump with the properly regulated fuel pressure.

Fuel Injectors

Three fuel injectors are used to inject fuel into the intake ports of the cylinder head.

One injector is used per cylinder.

Fuel is injected in accordance with injection signals from the ECM.

ADJUSTMENT

IDLE SPEED

Idle speed is controlled by the EMS (Engine Management System) and is not adjustable.

If desired, the engine RPM can be verified with a DIGITAL INDUCTION TACHOMETER (P/N 529 014 500).

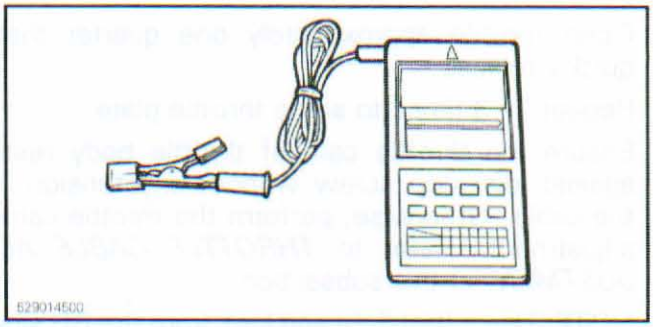

If idle speed is not as per specification (refer to *TECHNICAL SPECIFICATIONS*), perform the *CLOSED THROTTLE RESET (TPS)*.

NOTICE **Never attempt to adjust the capped idle stop screw. It is calibrated at the factory. If the screw adjustment is changed, the throttle body must be replaced.**

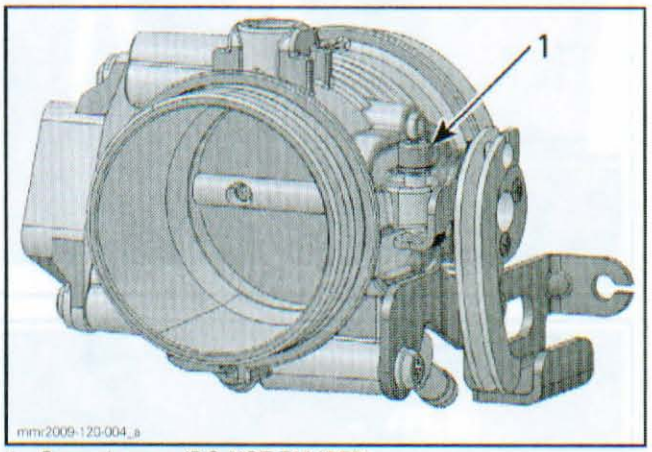

1. *Capped screw (DO NOT TAMPER)*

CLOSED THROTTLE RESET (TPS)

General Information

This operation performs a reset of the TPS (throttle position sensor) values in the ECM when the throttle is closed. This reset is very important as the setting of the TPS will determine the basic parameters for all fuel mapping and several ECM calculations for idle speed control of the engine.

Closed throttle reset must be done if:

- TPS is loosen, removed or replaced.
- Throttle body is replaced.
- ECM is replaced.

NOTICE **An improperly set TPS may lead to poor engine performance.**

Closed Throttle Reset Procedure (TPS)

Connect the B.U.D.S. software to perform this adjustment. Refer to *MONITORING AND FAULT CODES* subsection.

Open throttle approximately one quarter then quickly release.

Repeat 2 - 3 times to settle throttle plate.

Ensure the throttle cam of throttle body rests against idle stop screw without any tension in the cable. Otherwise, perform the throttle cable adjustment. Refer to *THROTTLE CABLE ADJUSTMENT* in this subsection.

NOTE: Use a flashlight and look from the RH side to see the throttle cam and the idle stop screw.



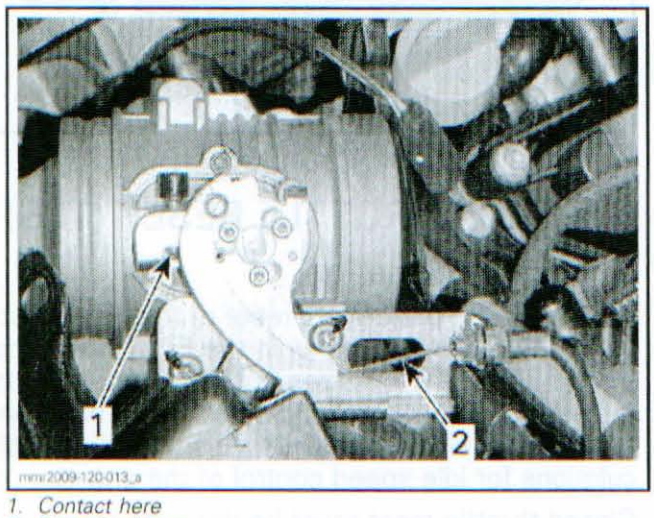

1. *Contact here*
2. *Free-play here*

NOTICE **Do not alter the setting of the capped screw, otherwise throttle body must be replaced.**

In B.U.D.S., click on the **Reset** button.

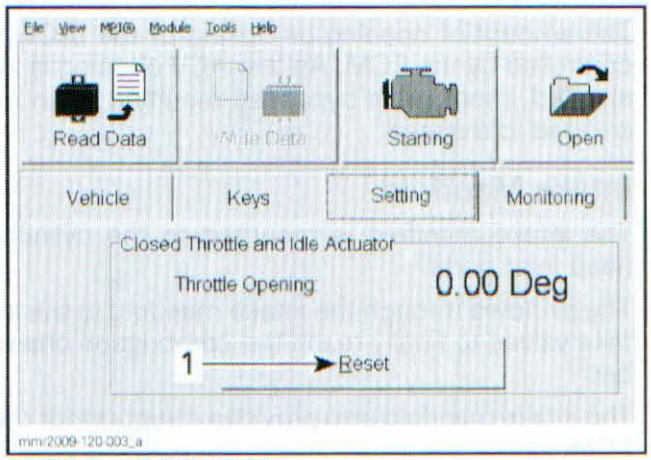

SETTING AND ECM TABS
1. *Click Reset*

IMPORTANT: If TPS is not within the allowed range while resetting the **Closed Throttle**, B.U.D.S. will display a message box and will not accept the setting. Exit B.U.D.S., remove D.E.S.S. key from its post and wait until ECM shuts down. Check throttle cable adjustment and repeat the reset.

Reset is completed.

Start engine and make sure it operates normally through its full engine RPM range. If fault codes appear, refer to *MONITORING SYSTEM AND FAULT CODES* subsection.

TROUBLESHOOTING

DIAGNOSTIC TIPS

Engine problems are not necessarily related to the injection system.

It is important to ensure the mechanical integrity of the engine is intact.

Poor Idling

If poor idling is experienced, check the following:
- Throttle cable adjustment or routing.
- IACV operation, cleanliness, leaking or clogged air passages.
- Throttle body cleanliness and idle stop screw.
- Engine leaks or other mechanical problem.

Electrical Related Problems

It is important to check the following in the electrical system:
- Battery voltage
- Ground connections
- Wiring connectors.

www.midwestmanuals.com

Ensure that all electronic components are original BRP recommended components.

Any modification on the wiring harness may lead to generate fault codes or bad operation.

⚠ WARNING

All electrical actuators (example: injectors, fuel pump and ignition coils) are powered as soon as the START/RER button is depressed.

Electrical Connections

Pay particular attention to ensure that pins are not out of their connectors or out of shape.

Make sure that connections are very tight and they make good contact, they are corrosion-free and show no signs of moisture. Particularly check ECM ground connections.

NOTE: Do not apply dielectric grease or other lubricant on the ECM connectors.

Check if wiring harness shows any signs of scoring.

PROCEDURES

ENGINE CONTROL MODULE (ECM)

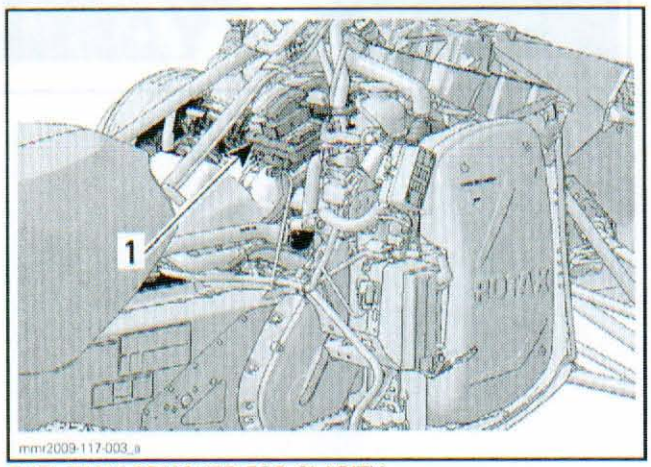

FUEL TANK REMOVED FOR CLARITY
1. *ECM*

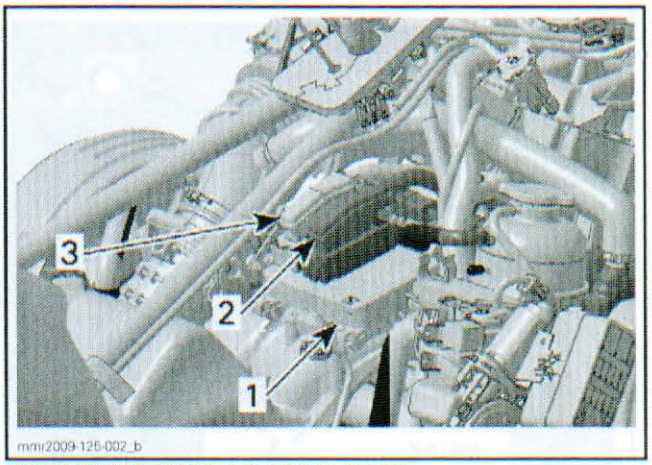

SOME PARTS REMOVED FOR CLARITY
1. *ECM*
2. *A connector*
3. *B connector*

NOTE: Prior to replacing an ECM, ensure to conduct all testing procedures.

ECM Connector Access

Move fuel tank rearward. Refer to *FUEL PUMP AND FUEL TANK* subsection.

ECM Connector Identification

There are two Kostal connectors used and they are connected on the ECM. The engine harness female connector is connected on the module male connector A and the vehicle system control harness female connector is connected to the module male connector B. The ECM connectors have 41 pins.

www.midwestmanuals.com

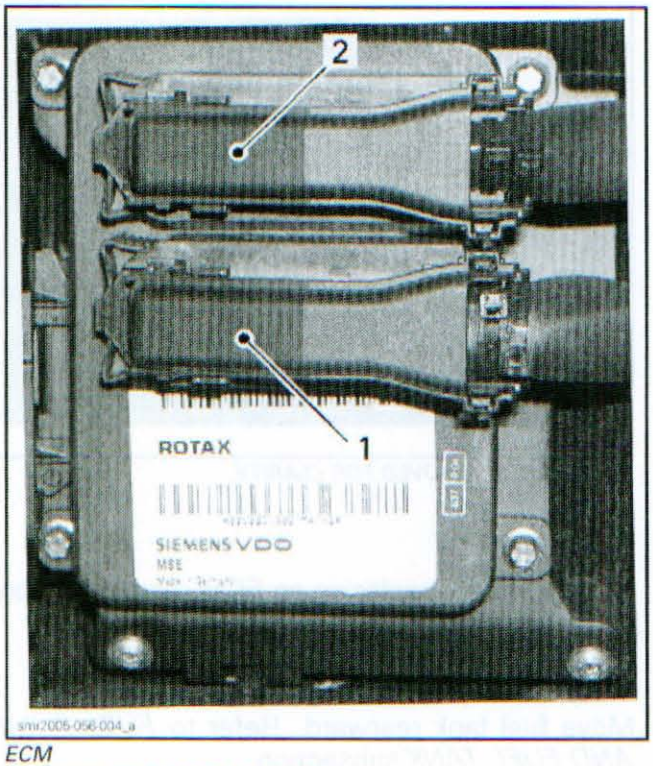

ECM
1. *Connector A (engine harness)*
2. *Connector B (vehicle harness)*

NOTICE Do not disconnect the ECM connectors needlessly. They are not designed to be disconnected/reconnected frequently.

ECM Connector Cleaning

To clean oxidized ECM terminals, use a contact cleaner such as DEOXIT LUBRICANT (P/N 293 550 034).

NOTICE Remove connector seal prior to applying the product. Otherwise, the seal will swell and will let water enter inside connector. Dry out connector with compressed air prior to reinstalling the seal.

Do not apply any lubricant product to the pins of the connector on the ECM.

ECM Connector Probing

The most recommended and safest method to probe ECM connector terminals is to use the ECM ADAPTER TOOL (2 CONNECTORS) (P/N 420 277 010). This tool will prevent deforming or enlarging terminals which would lead to bad ECM terminal contact creating intermittent or permanent problems.

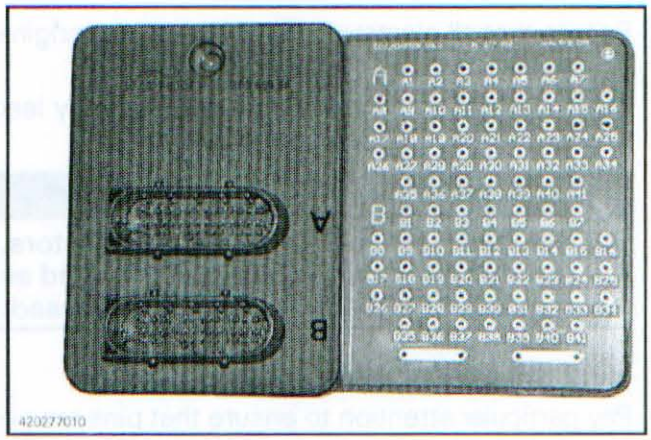

Disconnect the desired connector (A or B) from ECM and reconnect on the matching tool connector. Probe required terminals directly in the tool pins.



1. Probe copper ring

www.midwestmanuals.com

ECM Power Supply Troubleshooting

ECM Power Supply Diagram

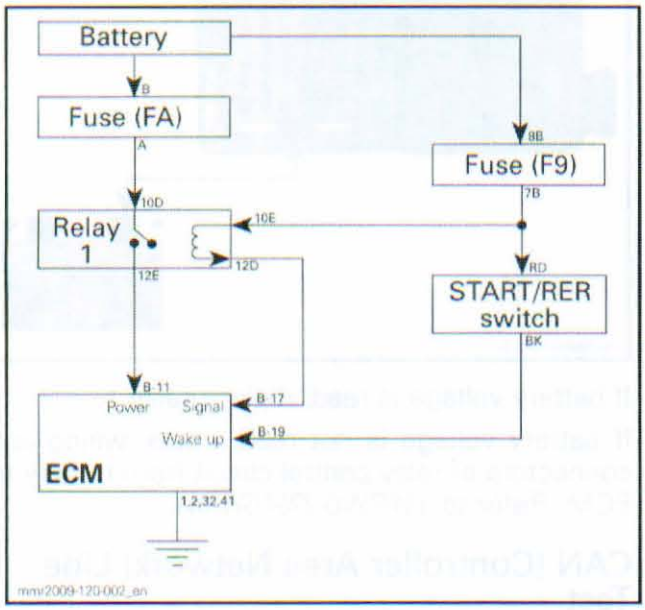

ECM Power Supply Validation

Briefly press START/RER button.

This should wake up the ECM and continuously activate the relay 1.

QUICK INDICATION THAT ECM IS NOT POWERED (ASSUMING THE OBSERVED COMPONENT IS WORKING)
Multifunction gauge does not turn on.
Fuel pump does not turn on for approx. 2 seconds.
Engine cranking does not occur when pressing START/RER button.

If ECM does not turn on, check the following:

- Fuse FA and F9.
- Battery voltage. Refer to *CHARGING SYSTEM*
- Relay 1.
- START/RER switch. Refer to *STARTING SYSTEM*.
- ECM power supply wires and ground wires.

Relay 1 Test

When relay 1 is not working, the EMS (engine management system) and the complete vehicle electrical system will not be powered.

Remove relay 1 from fuse box.

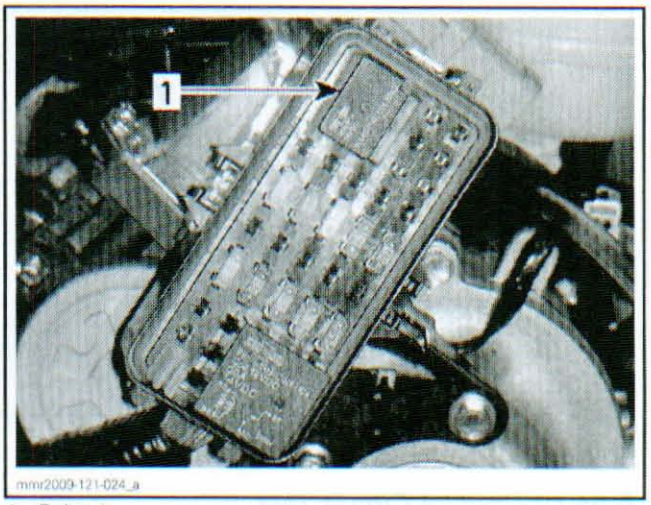

1. Relay 1

Use a multimeter and select the Ω position.

Probe relay as follows.

TERMINAL		RESISTANCE
30	87	Open circuit (OL)

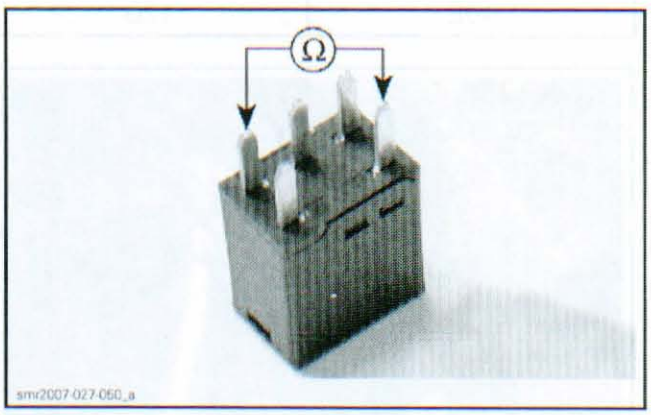

Connect a battery to relay terminals as shown and probe relay again as follows.

TERMINAL		RESISTANCE
30	87	0.5 Ω max. (continuity)

www.midwestmanuals.com

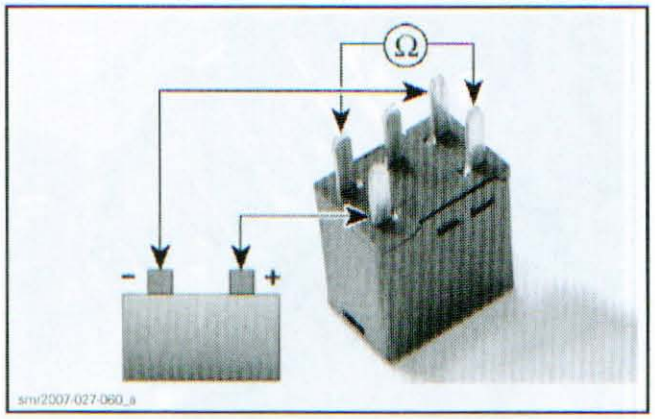

If relay failed any test, replace it.

Relay 1 Control Circuit Test

Disconnect ECM connector B.

Install ECM ADAPTER TOOL (2 CONNECTORS) (P/N 420 277 010) on ECM connector.

Temporarily install an appropriate fused jumper between terminals as per table.

FUSE BOX TERMINAL COORDINATES	
10E	12D

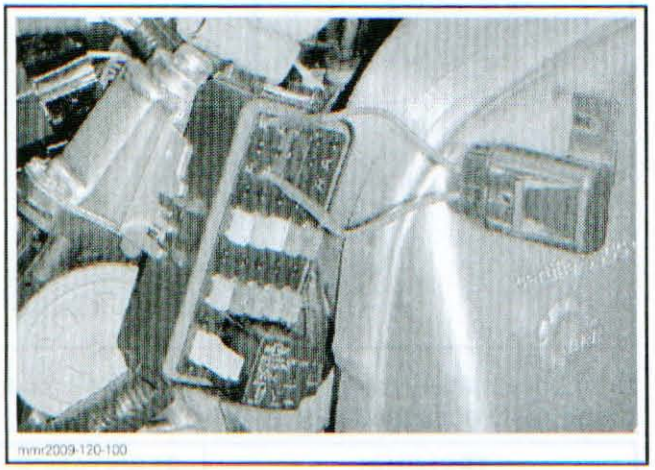

Use a multimeter and select Vdc.

Read voltage as follows.

ECM CONNECTOR B		MEASUREMENT
B-17	Battery ground	Battery voltage

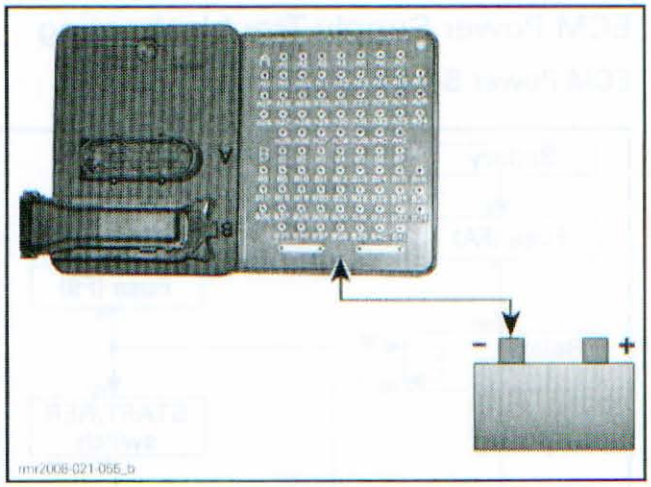

If battery voltage is read, replace relay 1.

If battery voltage is not read, check wiring and connectors of relay control circuit from battery to ECM. Refer to *WIRING DIAGRAM*.

CAN (Controller Area Network) Line Test

CAN lines link the ECM, multifunction gauge and vehicle diagnostic connector.

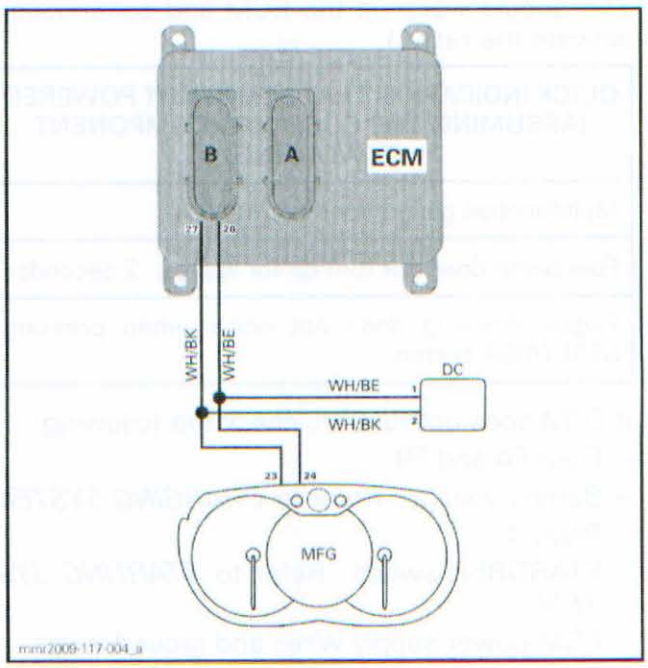

WH/BE (white/beige)
WH/BK (white/black)
MFG (multifunction gauge)
ECM (electronic control module)
DC (diagnostic connector)

Test wires continuity as follows.

Disconnect ECM connector B. Refer to *ECM* in this subsection.

Install ECM ADAPTER TOOL (2 CONNECTORS) (P/N 420 277 010) on ECM connector.

www.midwestmanuals.com

Disconnect multifunction gauge connector. Refer to *LIGHTS, GAUGE AND ACCESSORIES*.

Use the FLUKE 115 DIGITAL MULTIMETER (P/N 529 035 868) and select Ω.

Read wire resistance as follows.

ECM CONNECTOR	GAUGE CONNECTOR	MEASUREMENT
Pin B-27	Pin 23	Close to 0 Ω
Pin B-28	Pin 24	

If continuity is out of specification, repair or replace wiring harness between ECM and multifunction gauge.

If continuity is as per specification, carry out the following test.

Disconnect vehicle diagnostic connector from its protective cap.

Read wire resistance as follows.

DIAGNOSTIC CONNECTOR	GAUGE CONNECTOR	MEASUREMENT
Pin 2	Pin 23	Close to 0 Ω
Pin 1	Pin 24	

If continuity is out of specification, repair or replace wiring harness between diagnostic connector and multifunction gauge.

If continuity is as per specification, CAN lines are functional.

Reconnect connectors and reinstall removed parts.

ECM Wake Up Circuit Test

Disconnect B connector from ECM.

Use a multimeter and select Vdc.

While pressing START/RER button, read voltage as follows.

ECM CONNECTOR	BATTERY	MEASUREMENT
B-19	Battery ground	Battery voltage

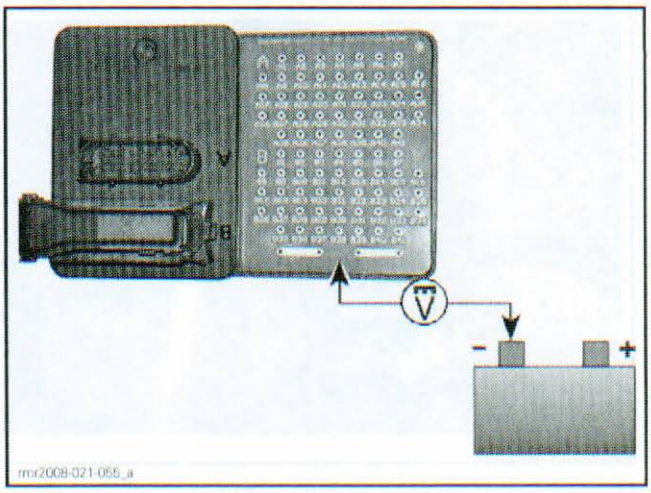

mmr2008-021-055_a

If voltage is out of specification, check START/RER switch (refer to *STARTING SYSTEM*). If switch tested good, check wiring and connectors from battery to ECM. Refer to *WIRING DIAGRAM*.

If voltage is as per specification, check the power circuit test.

ECM Power Circuit Test

Disconnect ECM connector B.

Install ECM ADAPTER TOOL (2 CONNECTORS) (P/N 420 277 010) on ECM connector.

Remove relay 1 from fuse box.

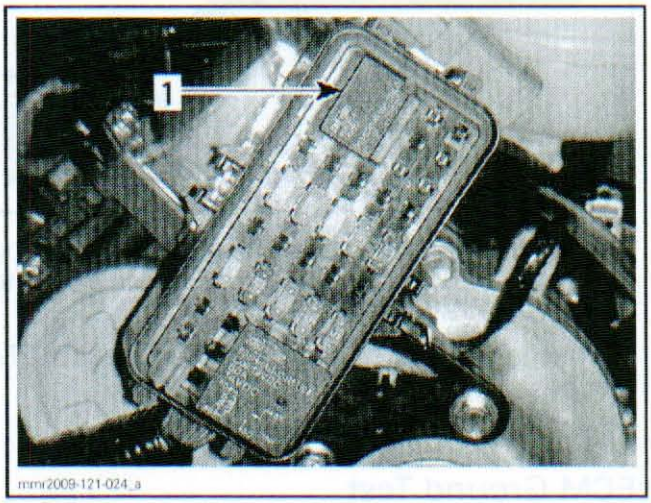

mmr2009-121-024_a

1. Relay 1

Temporarily install an appropriate fused jumper between terminals as per table.

FUSE BOX TERMINAL COORDINATES	
10D	12E

www.midwestmanuals.com

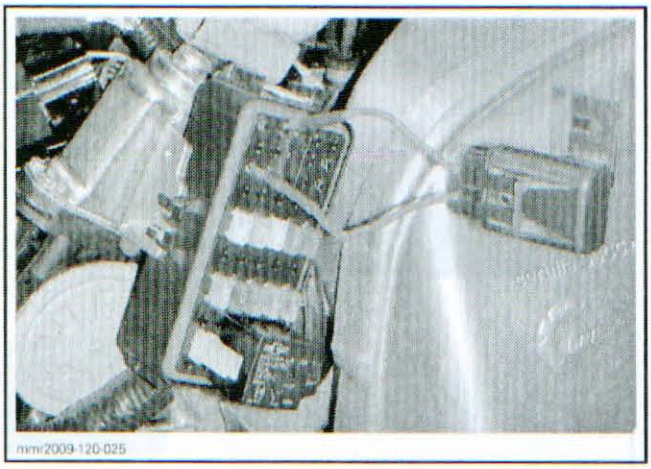

Use a multimeter and select Vdc.

Read voltage.

ECM CONNECTOR B	BATTERY	MEASUREMENT
Pin B-11	Battery ground	Battery voltage

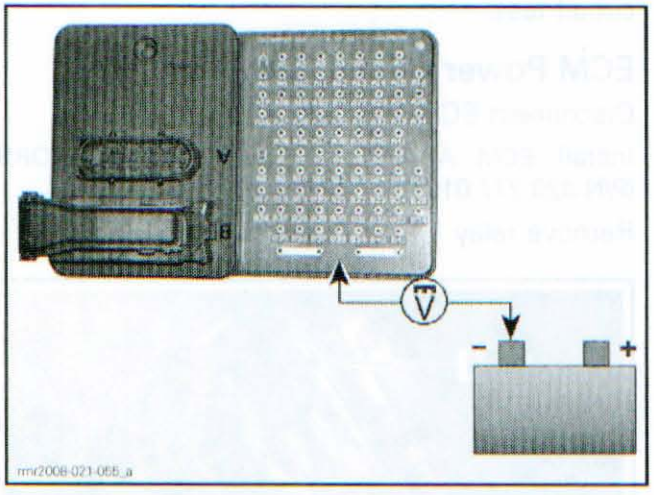

If voltage is out of specification, check wiring and connectors from battery to ECM. Refer to *WIRING DIAGRAM* subsection.

If voltage is as per specification, check ECM grounds.

Remove jumper and reinstall relay.

ECM Ground Test

Disconnect B connector from ECM.

Use a multimeter and select Ω.

Check continuity of wiring as follows.

ECM CONNECTOR PIN	BATTERY	MEASUREMENT
B-1	Battery ground	Close to 0 Ω (continuity)
B-2		
B-32		
B-41		

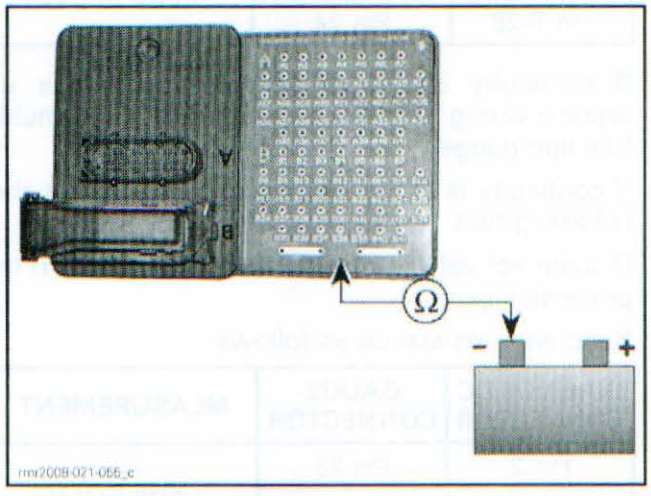

If test succeeded, ECM grounds are adequate.

If test failed, check ECM ground on chassis.

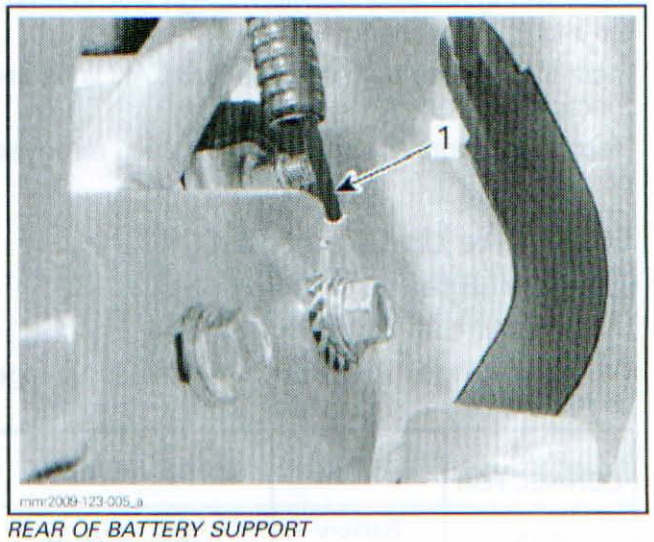

REAR OF BATTERY SUPPORT
1. Chassis ground

ECM Removal

NOTE: If a new ECM is to be installed, first read the procedures in the *ECM REPLACEMENT*.

Move fuel tank rearward. Refer to *FUEL PUMP AND FUEL TANK* subsection.

Disconnect battery cables.

www.midwestmanuals.com

⚠ WARNING

Battery BLACK (-) cable must always be disconnected first and connected last.

Disconnect ECM connectors.

Remove ECM retaining screws.

Pull out ECM.

ECM Installation

Reverse removal procedure and pay attention to the following.

Install ECM as follows.

1. Reconnect ECM connectors to ECM, and then battery cables.
2. If a new ECM has been installed, refer to *ECM REPLACEMENT* below.

ECM Replacement

NOTE: Before replacing an ECM, ensure all testing procedures has been done.

Transfer the data from the previous ECM to the new one using B.U.D.S.

If you are unable to transfer the data, proceed as follows.

1. Use B.U.D.S. software.
2. Click the **Read Data** button to read the new "empty" ECM.

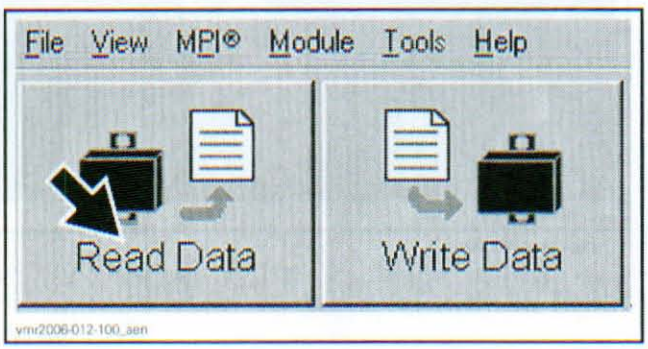

3. The following message will appear on B.U.D.S. screen.

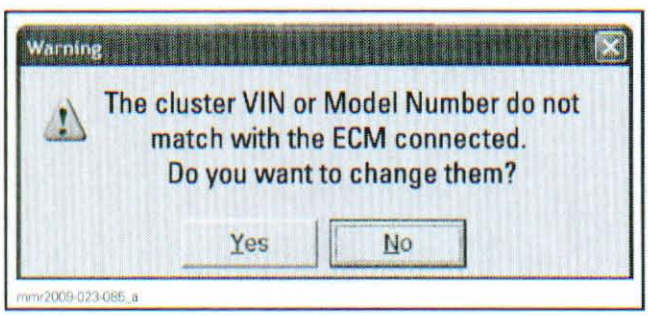

4. Click **Yes** to match ECM and gauge.
5. The serial numbers are purposely missing as seen in B.U.D.S. Click the arrows shown to transfer the gauge numbers into the ECM.

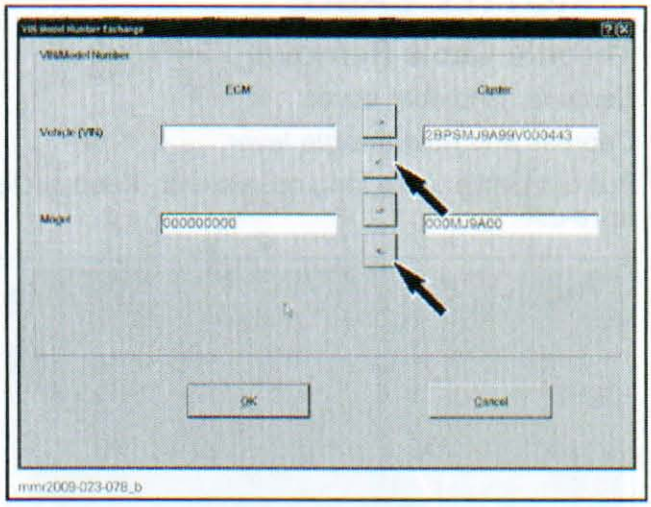

6. Now the information numbers between ECM and gauge properly matches.

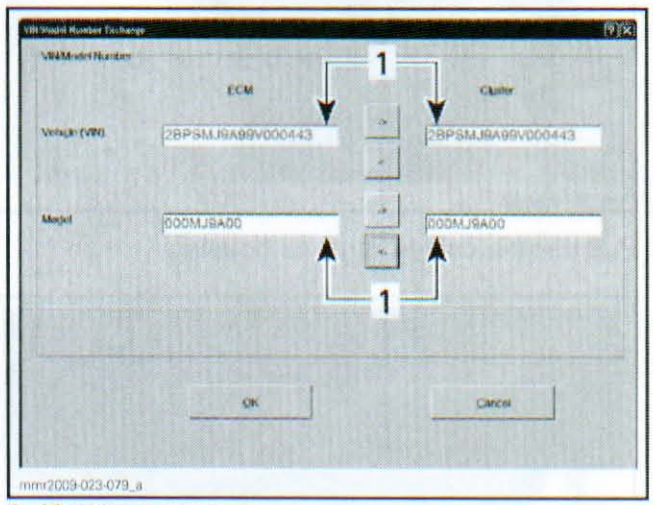

1. Matching numbers

7. Enter the required information in **Vehicle** upper tab and the **ECM** lower tab.

NOTICE **Pay particular attention when typing the V.I.N. and model numbers. Once Write Data button is pressed, numbers cannot be modified.**

8. Reprogram D.E.S.S. key(s). Refer to *DE.S.S. SYSTEM.*
9. Perform the closed throttle reset. Refer to *CLOSED THROTTLE RESET* in this subsection.
10. Set the multifunction gauge units. Refer to *LIGHTS, GAUGE AND ACCESSORIES.*

www.midwestmanuals.com

11. Start the engine and increase engine speed above 6000 RPM to be sure no fault appears.
12. Reinstall removed parts.

THROTTLE CABLE

Throttle Cable Removal

Remove handlebar cover.

Depress and hold throttle lever.

Pull out circlip using long nose pliers. Keep circlip to re-use.

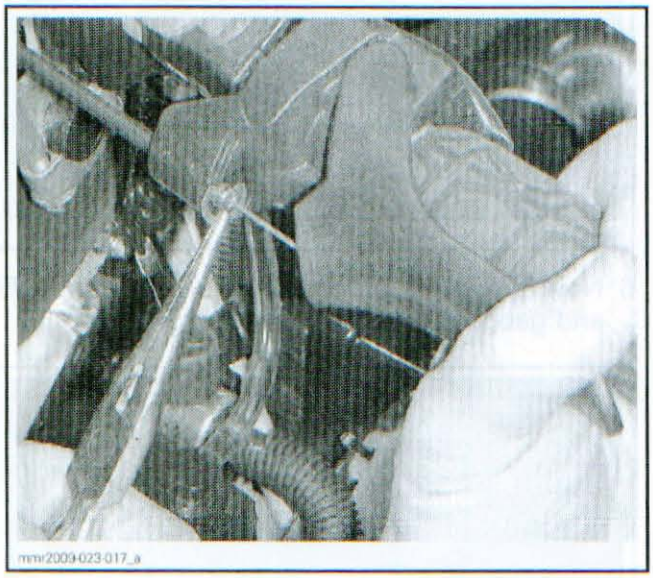

Pull throttle cable out of its housing.

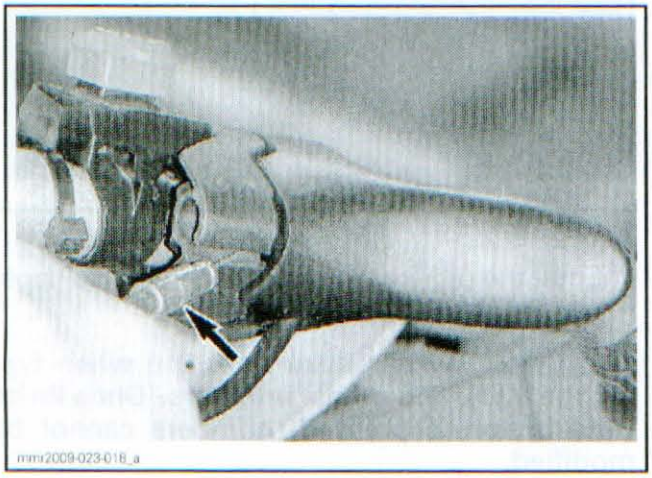

Unhook cable end barrel from throttle lever and remove cable.

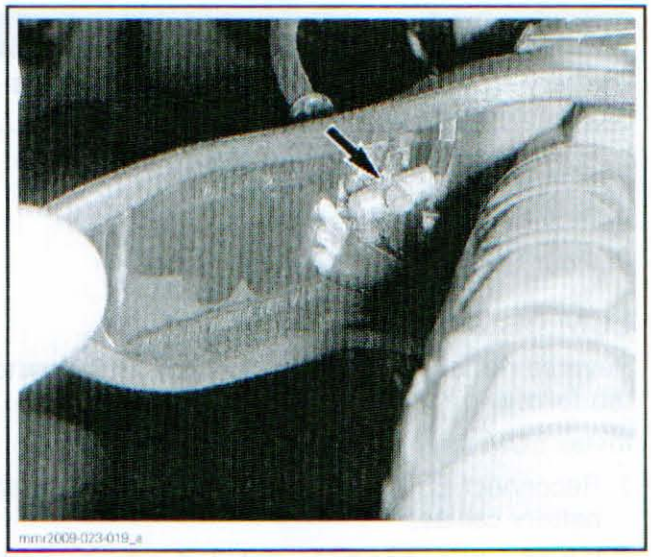

Note cable routing before removal.

Remove drive belt guard. Refer to *DRIVE BELT*.

Remove air intake silencer. Refer to *AIR INTAKE SYSTEM*.

Disconnect intake adapter from air intake silencer and both hoses connected to it.

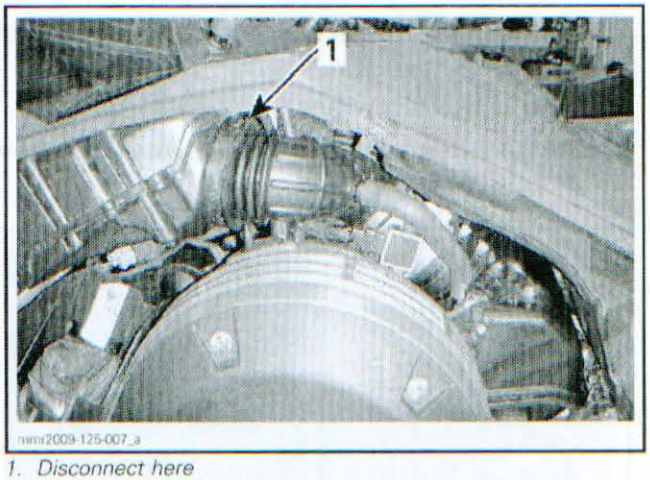

1. Disconnect here

www.midwestmanuals.com



1. Disconnect both hoses

Pull out adapter from throttle body.

At throttle body, unlock top nut.

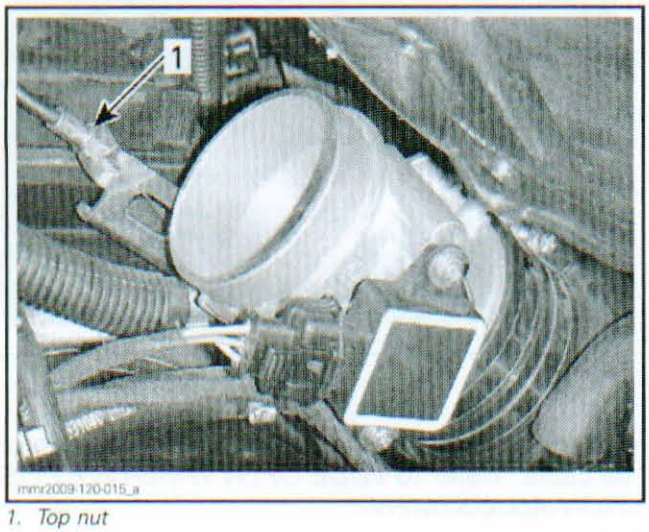

1. Top nut

Loosen throttle body clamp.



1. Clamp

Pull out throttle body enough to have access to throttle cable attachment.

Detach throttle cable from throttle body.

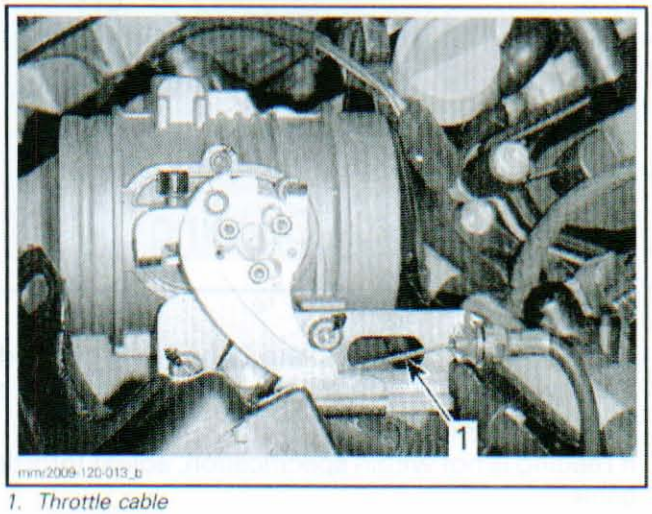

1. Throttle cable

Remove throttle cable.

Throttle Cable Installation

Reverse removal procedure but pay attention to the following.

Route cable as noted before removal.

Ensure that cable ends are properly secured in their levers.

Proceed with throttle cable adjustment.

Throttle Cable Adjustment

Handlebar must be in the straight ahead position and throttle cable routing must be at its factory position.

NOTICE Do not alter throttle cable routing. It may cause poor startability and erratic idling.

Wide Open Throttle Position Adjustment

Connect B.U.D.S. Refer to *COMMUNICATION TOOLS AND B.U.D.S. SOFTWARE*.

Use the B.U.D.S. software.

Observe the throttle opening in B.U.D.S. while holding throttle lever at wide open throttle (WOT).

The displayed value must be within the following specification.

THROTTLE OPENING (WIDE OPEN THROTTLE)
68 - 72%

www.midwestmanuals.com

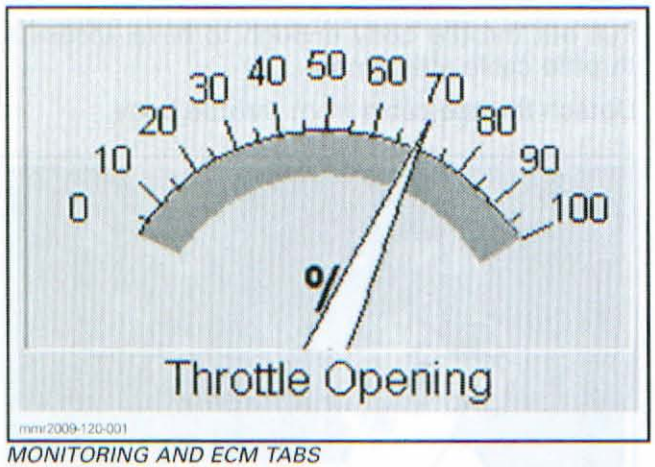

MONITORING AND ECM TABS

NOTE: Even if throttle plate is not fully opened, there will be no performance loss as long as it is within the specification.

If reading is not within specification, adjust throttle cable.

NOTE: If value is below the minimum, tighten throttle cable adjuster. If value is above the maximum value, loosen throttle cable adjuster.

Loosen lock nut on the cable adjuster.

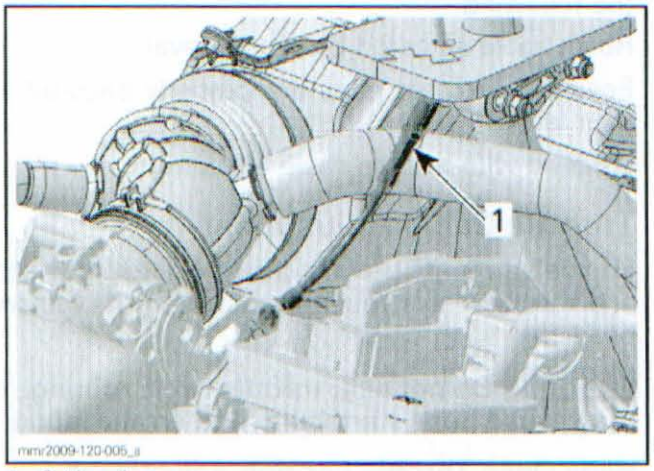

1. Cable adjuster

Set cable adjuster as required then tighten lock nut.

Turn handlebar side to side and ensure adjustment is still within the specification in each position while at WOT.

Idle Position Verification

Activate and release throttle lever a few times.

While throttle is released, make sure stopper of throttle cam rests against the idle stop screw and there is some free-play in the cable.

NOTE: Use a flashlight and look from the RH side to see the throttle cam and the idle stop screw.



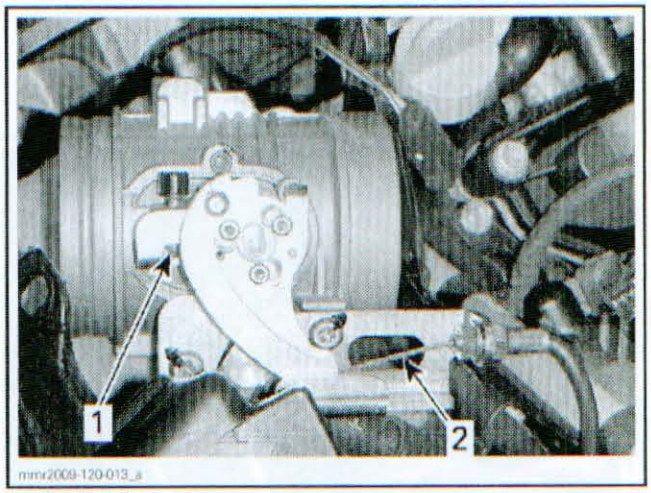

1. Contact here
2. Free-play here

If the above conditions are not met, adjust throttle cable. Refer to *WIDE OPEN THROTTLE POSITION ADJUSTMENT.*

NOTICE **If there is no free-play at idle position, it may cause poor idling and startability problems.**

FUEL RAIL

Fuel Rail Removal

Remove air intake silencer and gauge support assembly. Refer to *BODY.*

Remove drive belt guard. Refer to *DRIVE SYSTEM AND BRAKE.*

Fuel Rail Hose Disconnection

1. Release fuel pressure. Refer to *FUEL PUMP* in *FUEL TANK AND FUEL PUMP* subsection.
2. Move fuel tank rearward. Refer to *FUEL PUMP AND FUEL TANK* subsection.

www.midwestmanuals.com

3. Disconnect fuel hose from fuel rail using the FUEL HOSE DISCONNECT TOOL (P/N 529 036 037).

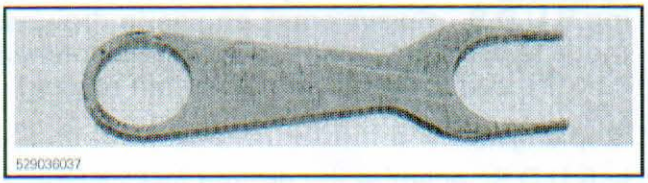



NOTE: It may be necessary to rotate fuel hose fitting to align the tool ends with the openings of the locking mechanism.

NOTE: Wrap a rag around the hose end to catch fuel leakage.

Fuel Rail Removal

Unplug all injector connectors.

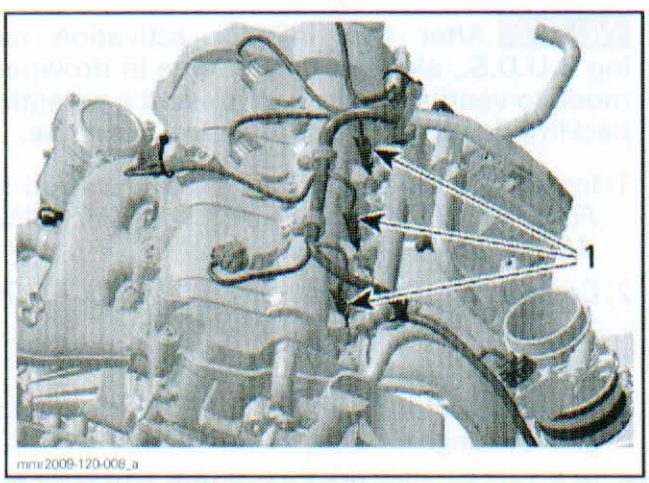

1. Injector connectors

NOTE: Carefully use a screwdriver and gently pry the top of the connector tab to unlock it.

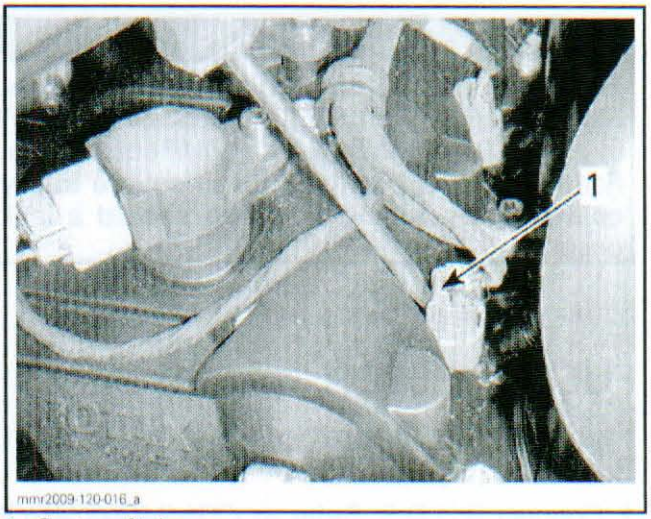

1. Pry top of tab

Remove ECM support.

Remove retaining screws of fuel rail.

Gently pull fuel rail side to side (wiggle).

Pull fuel rail out with fuel injectors.

Fuel Rail Installation

For the installation, reverse the removal procedure. However, pay attention to the following.

Torque fuel rail retaining screws to 11 N•m (97 lbf•**in**).

Fuel Rail Hose Connection

1. Apply engine oil on O-rings of fitting.

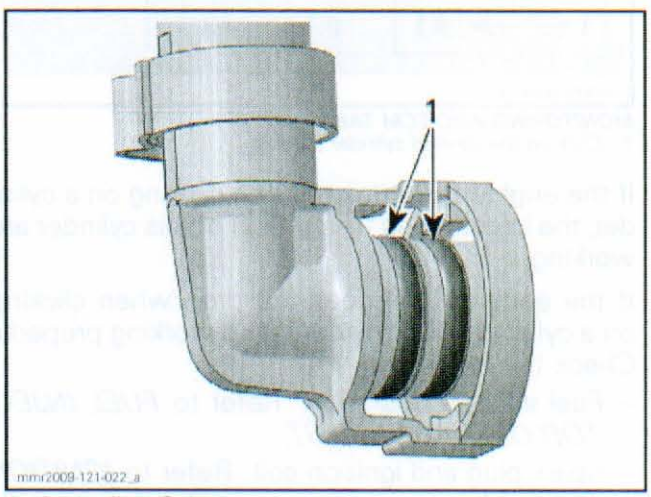

1. Apply oil on O-rings

2. Connect fuel hose to fuel rail.

IMPORTANT: Push fuel hose fitting on fuel rail until you hear a "click". Try pulling fuel hose to ensure fitting is properly locked.

www.midwestmanuals.com

⚠ WARNING

Pressurize the fuel system to check for leaks. Refer to *FUEL SYSTEM PRESSURIZATION* in *FUEL TANK AND FUEL PUMP* subsection. Failure to do so may result in severe injury or a life threatening situation should a leak occur.

3. Reinstall all remaining removed parts.

FUEL INJECTOR

Fuel Injector Operation Test with B.U.D.S. (Dynamic)

1. Connect B.U.D.S. Refer to *COMMUNICATION TOOLS AND B.U.D.S. SOFTWARE.*
2. Start engine.
3. Using the B.U.D.S. software, shut down each engine cylinder, one at a time.

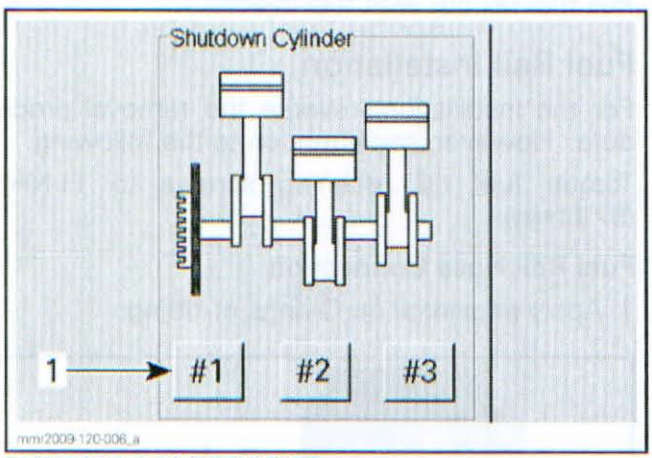

MONITORING AND ECM TABS
1. Click on the desired cylinder number

If the engine RPM drops when clicking on a cylinder, the injector and the ignition of this cylinder are working.

If the engine RPM does not drop when clicking on a cylinder, this cylinder is not working properly. Check the following:

- Fuel injector operation. Refer to *FUEL INJECTOR OPERATION TEST.*
- Spark plug and ignition coil. Refer to *IGNITION SYSTEM.*
- Engine condition.

Fuel Injector Operation Test with B.U.D.S. (Static)

NOTICE **After fuel injector activation using B.U.D.S., always crank engine in drowned mode to ventilate engine to prevent a potential backfire due to fuel accumulation in engine.**

Stop engine.

In B.U.D.S., energize the desired fuel injector.

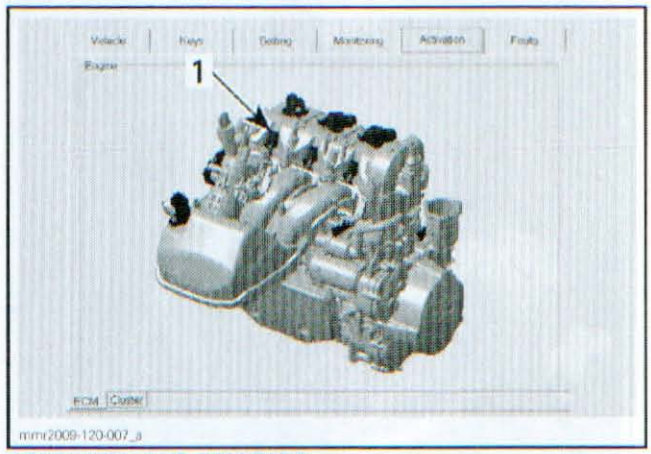

ACTIVATION AND ECM TABS
1. Injector of cylinder no. 1 shown

Listen to the injector.

If you can hear the injector, it validates its operation. Carry out the *FUEL INJECTOR BALANCE TEST* and the *FUEL INJECTOR LEAKAGE TEST.*

If you do not hear the injector, carry out the *INJECTOR INPUT VOLTAGE TEST.*

Fuel Injector Balance Test with B.U.D.S.

NOTICE **After fuel injector activation using B.U.D.S., always crank engine in drowned mode to ventilate engine to prevent a potential backfire due to fuel accumulation in engine.**

1. Install a fuel pressure gauge as described in *FUEL PUMP PRESSURE TEST* of *FUEL TANK AND FUEL PUMP* subsection.
2. Connect B.U.D.S. Refer to *COMMUNICATION TOOLS AND B.U.D.S. SOFTWARE.*
3. Install D.E.S.S. key on its post.
4. Set engine stop switch to STOP to prevent engine starting.
5. In B.U.D.S., click the **Fuel Pump** button to activate fuel pump.
6. Fuel pressure must be within specification. Refer to *FUEL TANK AND FUEL PUMP* subsection. Re-activate fuel pump as necessary.

www.midwestmanuals.com

7. In B.U.D.S., energize the fuel injector **no. 1**.

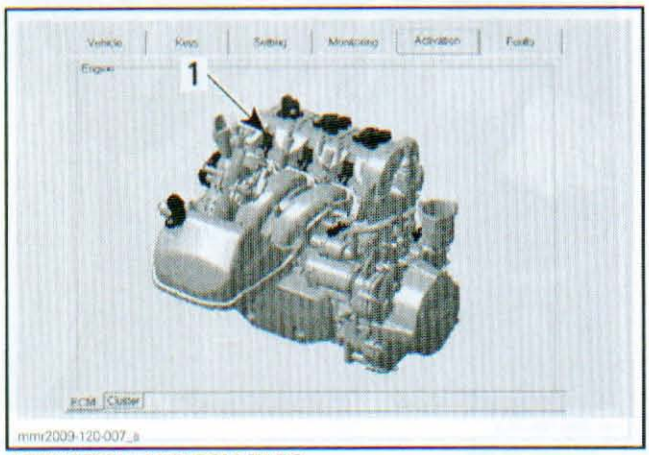

ACTIVATION AND ECM TABS
1. Injector of cylinder no. 1

8. Record the fuel pressure drop for injector **no. 1**.
9. In B.U.D.S., click the **Fuel Pump** button to activate fuel pump.

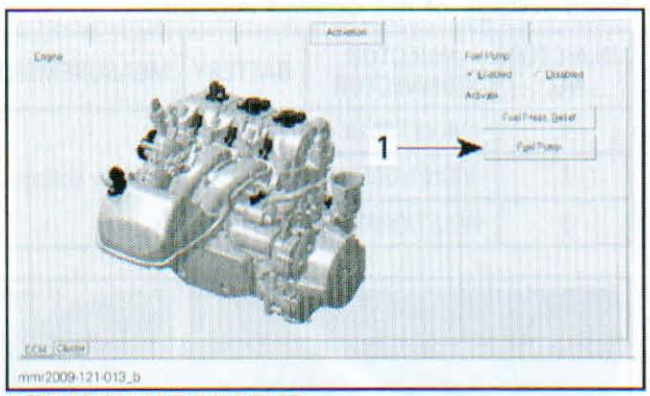

ACTIVATION AND ECM TABS
1. Click here

10. Repeat the procedure for fuel injectors **no. 2** and **no. 3** and record their pressure drops.
11. The maximum fuel pressure drop between injectors should not exceed the following specification:

MAXIMUM FUEL PRESSURE DROP ALLOWED BETWEEN FUEL INJECTORS
10 kPa (1.5 PSI)

12. If pressure drop of any fuel injector is greater than the specification, replace that injector then repeat the test.
13. Remove fuel pressure gauge and reinstall removed parts.

Fuel Injector Leakage Test

Preparation

First make sure fuel pressure is within specification. Refer to *FUEL TANK AND FUEL PUMP* subsection.

NOTE: Keep the pressure gauge installed for the leakage test.

Install D.E.S.S. key on its post.

Set engine stop switch to STOP.

⚠ WARNING

The engine stop switch is set to STOP to prevent any spark in the engine compartment should the engine be cranked. Fuel vapors may ignite in presence of a spark creating a fire hazard.

Withdraw fuel rail and keep it connected. Refer to *FUEL RAIL* in this subsection.

Carefully lift fuel rail.

Place an appropriate container under injectors.

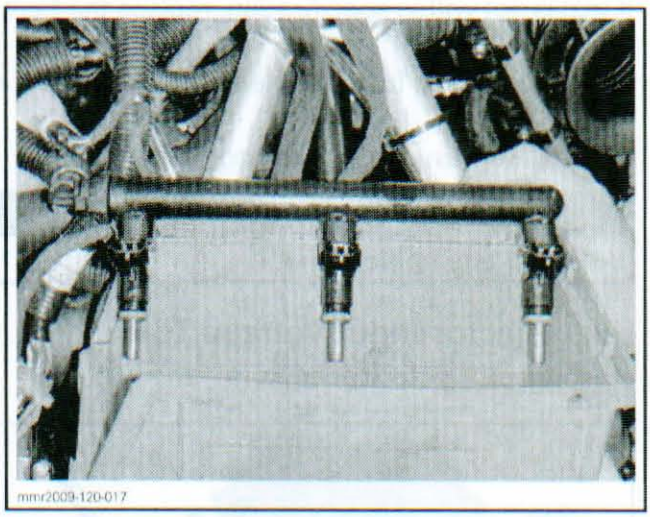

Ensure there is enough fuel in fuel tank.

Connect B.U.D.S. Refer to *COMMUNICATION TOOLS AND B.U.D.S. SOFTWARE*.

Leakage Test

Use the B.U.D.S. software.

Briefly press the START/RER button.

Click the **Fuel Pump** button.

www.midwestmanuals.com

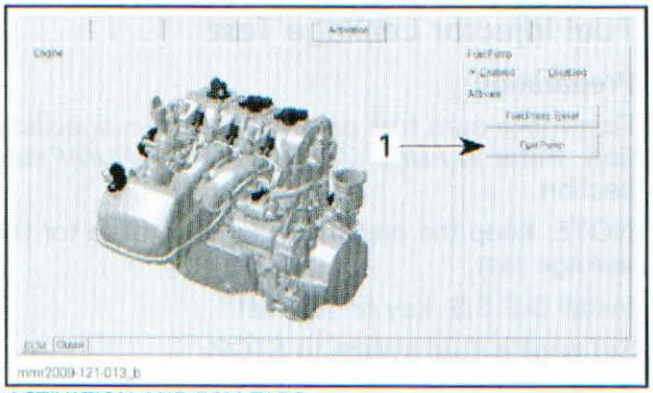

ACTIVATION AND ECM TABS
1. Click here

Check for fuel leakage from the injector nozzles.

Monitor fuel pressure at fuel pressure gauge. If pressure drops below 372 kPa (54 PSI) during the test, re-activate fuel pump as necessary.

FUEL INJECTOR LEAKAGE	
TEST DURATION	SPECIFICATION
2 minutes	0 - 1 drop per minute maximum

If test is not within specification, replace the faulty fuel injector.

Properly reinstall fuel rail. Refer to *FUEL RAIL* in this subsection.

Reinstall remaining removed components.

⚠ WARNING

Wipe up any spilled fuel.

Fuel Injector Input Voltage Test

Disconnect injector connectors.

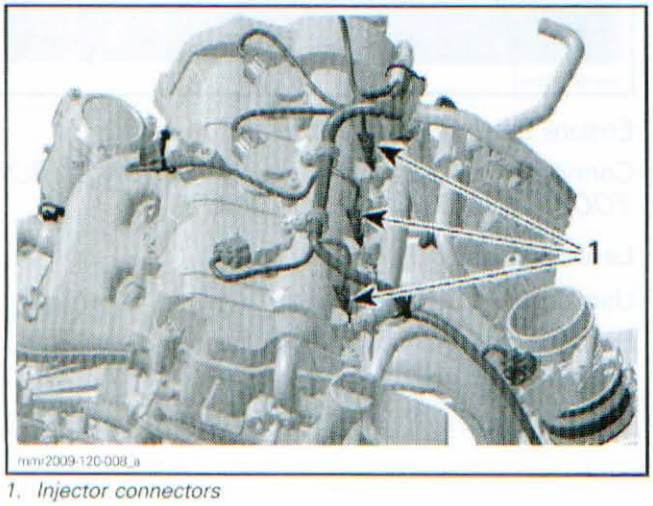

1. Injector connectors

NOTE: Carefully use a screwdriver and gently pry the top of the connector tab to unlock it.

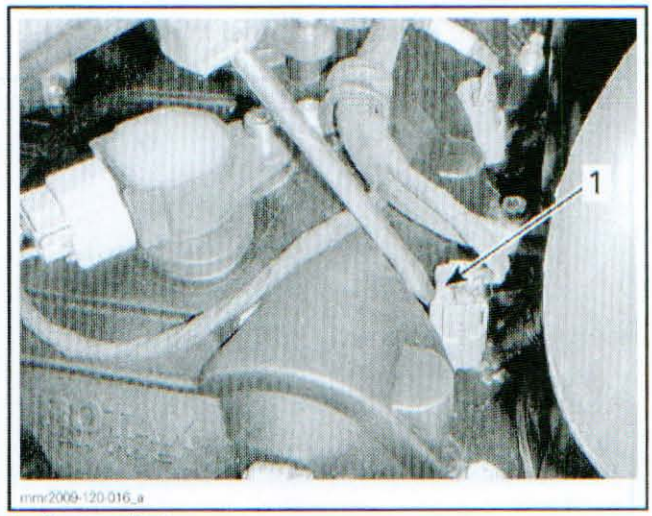

1. Pry top of tab

Use the FLUKE 115 DIGITAL MULTIMETER (P/N 529 035 868) and select Vdc.

Briefly press the START/RER button to wakeup ECM.

Read voltage of the desired injector.

INJECTOR NO.	INJECTOR CONNECTOR	BATTERY	MEASUREMENT
1	VIOLET/BLUE	Ground terminal	Battery voltage
2	VIOLET/GREEN		
3	VIOLET/ORANGE		

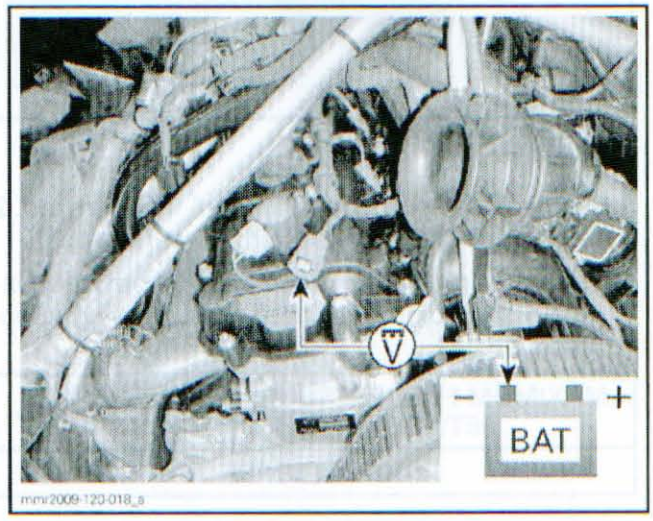

If input voltage is good, carry out the *INJECTOR CONTROL CIRCUIT TEST.*

If input voltage is not good, check continuity between relay 1 and injector as follows.

Remove relay 1 from fuse box.

www.midwestmanuals.com

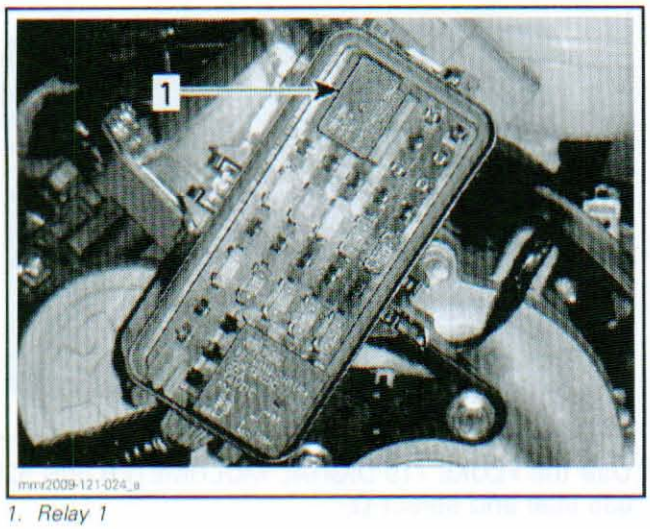

1. Relay 1

Use the FLUKE 115 DIGITAL MULTIMETER (P/N 529 035 868) and select Ω.

Read the resistance of the desired injector circuit.

INJECTOR NO.	INJECTOR CONNECTOR	BATTERY	MEASUREMENT
1	VIOLET/BLUE	Terminal 12E	Close to 0 Ω
2	VIOLET/GREEN		
3	VIOLET/ORANGE		

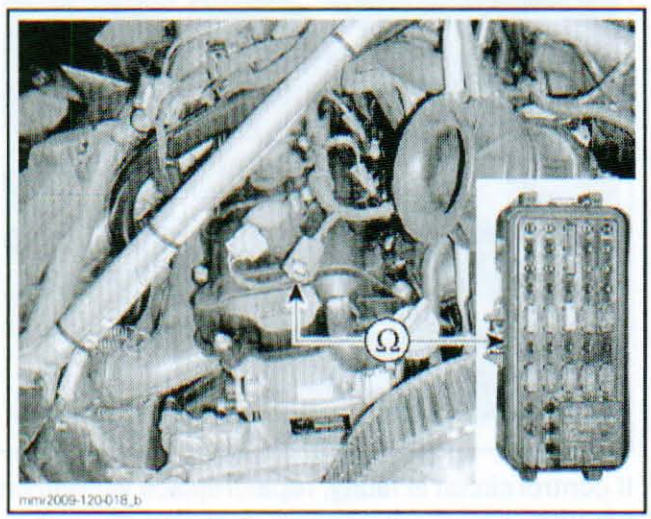

- If continuity is faulty, repair or replace wiring from fuse box to injector.
- If continuity is good, check relay and wiring from battery to fuse box. Refer to *ECM* in this subsection.

Reinstall relay 1.

Fuel Injector Signal Test

Connect B.U.D.S. Refer to *COMMUNICATION TOOLS AND B.U.D.S. SOFTWARE.*

Use the FLUKE 115 DIGITAL MULTIMETER (P/N 529 035 868) and set it to Vdc (Hz).

NOTE: Make sure multimeter is in the **Auto Range** mode.

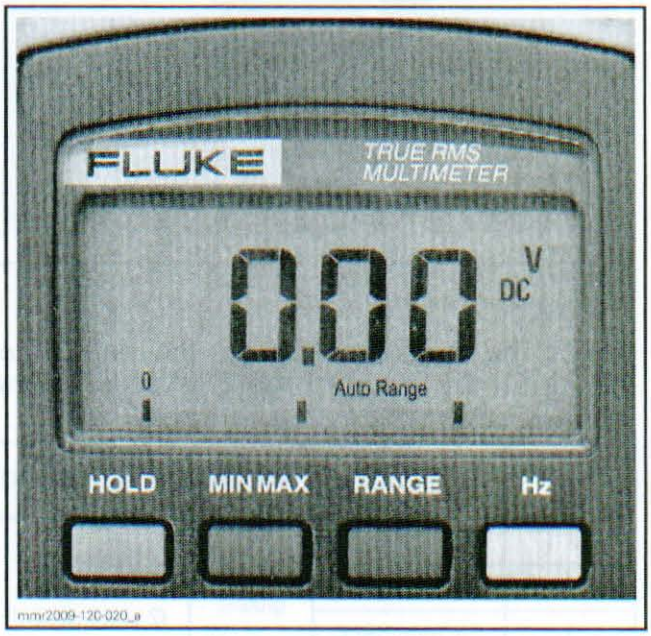

Press the **Hz** button so that the display shows Hz.

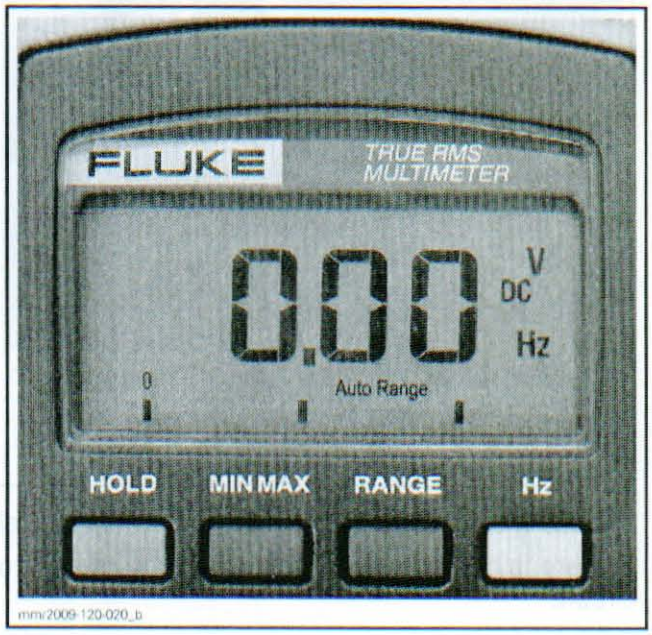

Use the B.U.D.S. software.

Activate injector and read the frequency on the multimeter.

www.midwestmanuals.com

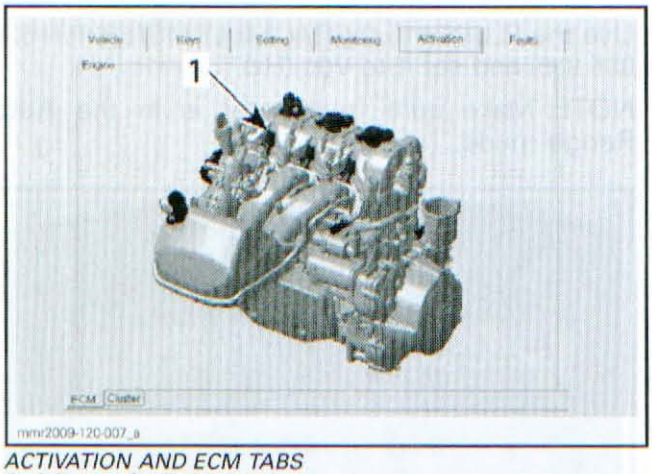

ACTIVATION AND ECM TABS
1. Injector of cylinder no. 1

NOTE: The multimeter counts the pulses per minute (Hertz) of current the ECM sends to the injector.

INJECTOR NO.	INJECTOR CONNECTOR	BATTERY	MEASUREMENT
1	BROWN/RED	Battery ground	Approximately 60 Hz (2 short pulses)
2	BROWN/BLUE		
3	BROWN/GREY		

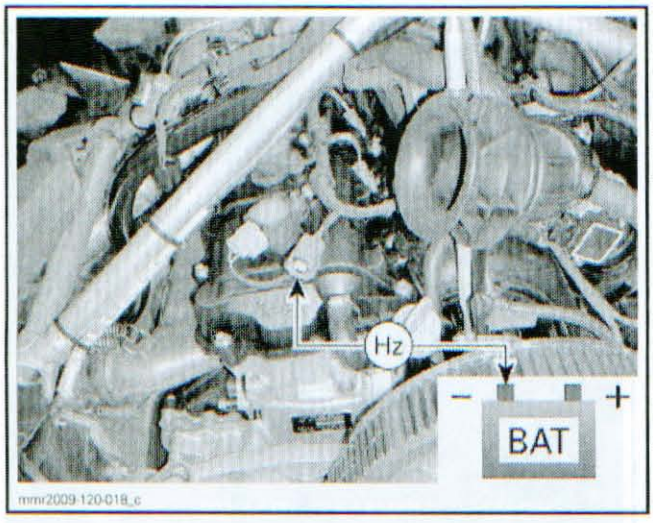

If reading is good, the control circuit is functional.

If there is no reading, check continuity of control circuit.

Fuel Injector Control Circuit Test

Disconnect ECM A connector. Refer to *ECM* in this subsection.

Install ECM ADAPTER TOOL (2 CONNECTORS) (P/N 420 277 010) on ECM connector.

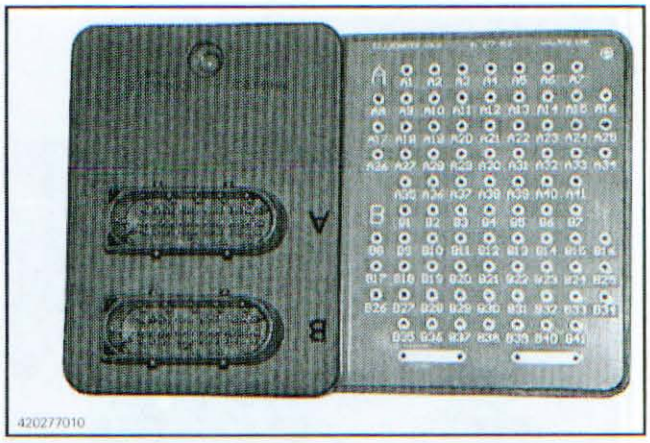

Use the FLUKE 115 DIGITAL MULTIMETER (P/N 529 035 868) and select Ω.

Probe terminals as follows.

INJECTOR NO.	ECM CONNECTOR PIN	INJECTOR CONNECTOR	MEASUREMENT
1	A-15	BROWN/RED	Close to 0 Ω
2	A-33	BROWN/BLUE	
3	A-14	BROWN/GREY	

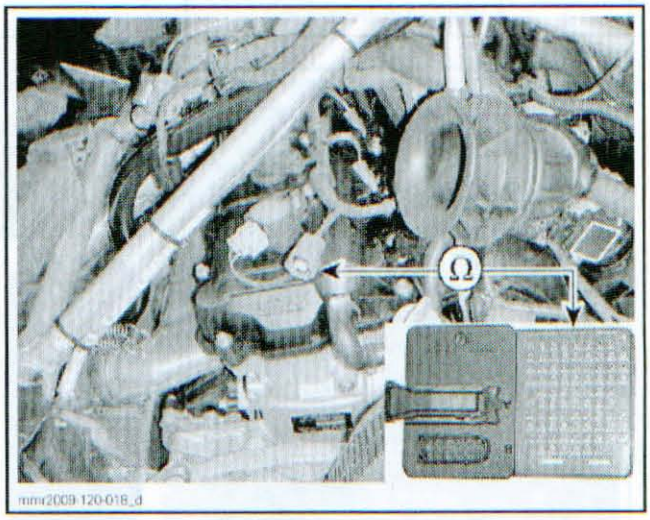

If control circuit is faulty, repair/replace wiring/connectors.

If control circuit and all tests applicable to the injector are good, try a new ECM. Refer to *ECM*.

Fuel Injector Resistance Test (at ECM Connector)

Reconnect the injector connector.

Disconnect the ECM A connector.

Install ECM ADAPTER TOOL (2 CONNECTORS) (P/N 420 277 010) on ECM connector.

www.midwestmanuals.com

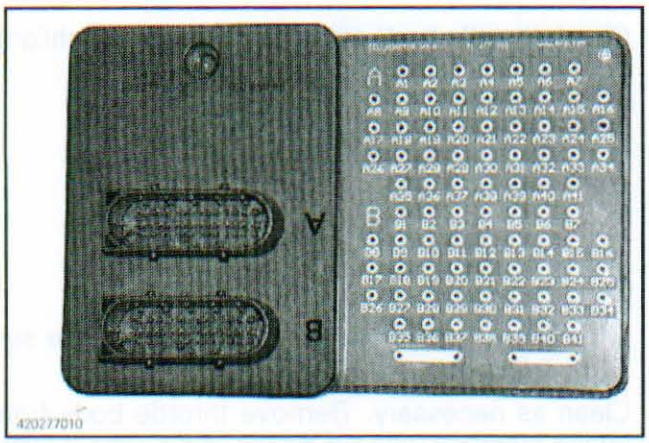

Remove relay 1 from fuse box.

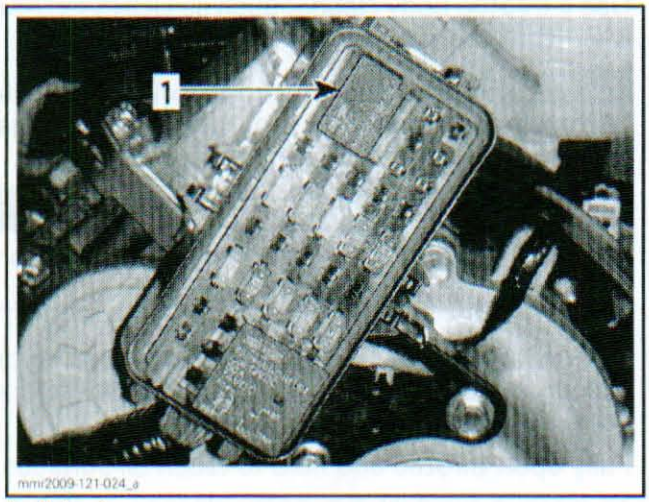

1. Relay 1

Use the FLUKE 115 DIGITAL MULTIMETER (P/N 529 035 868)



Set multimeter to Ω.

Check resistance value between terminals as follows.

INJECTOR	FUSE BOX	ECM CONNECTOR	RESISTANCE @ 20°C (68°F)
1	Terminal 12E	A-15	Approximately 12.6 Ω
2		A-33	
3		A-14	

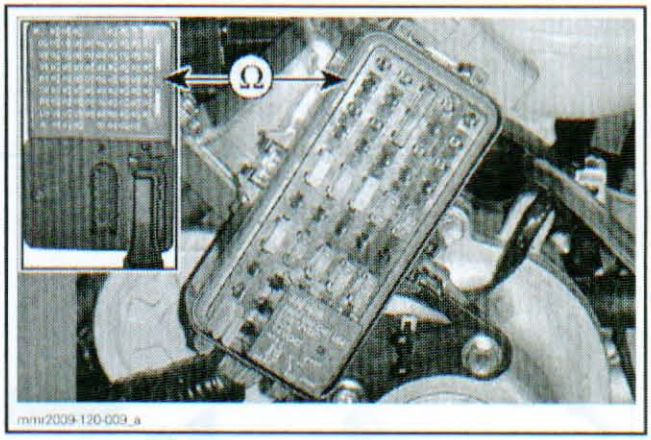

If resistance value is correct, injector coil is in good condition.

If resistance value is incorrect, repeat test at injector connector.

Reinstall relay 1.

Fuel Injector Resistance Test (at Component)

Remove injector connector and check resistance value between injector pins as follows.

INJECTOR PIN		RESISTANCE @ 20°C (68°F)
1	2	See above

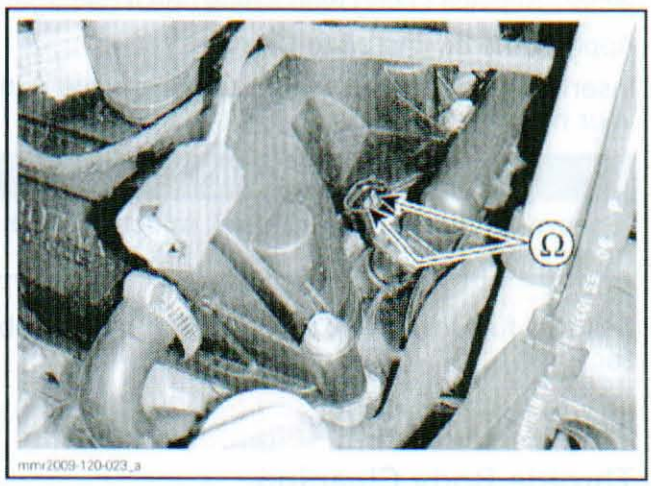

If reading is out of specification, replace injector.

www.midwestmanuals.com

If reading is good but the test failed at ECM, repair/replace wiring/connectors from fuse box to injector.

Reinstall relay 1 and remaining removed parts.

Fuel Injector Removal

Remove fuel rail. Refer to *FUEL RAIL* in this subsection.

Slide out the fuel injector clip (see illustration).

Pull out fuel injector from fuel rail.

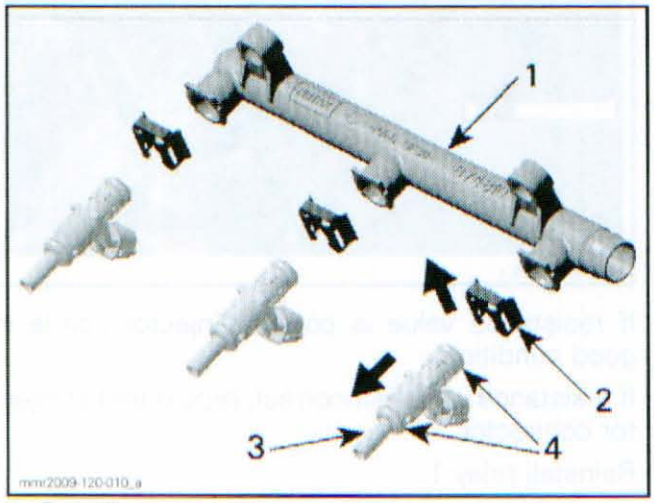

1. *Fuel rail*
2. *Fuel injector clip*
3. *Fuel injector*
4. *O-ring*

Fuel Injector Installation

For the installation, reverse the removal procedure. However, pay attention to the following.

NOTE: If you reinstall a used injector, carefully inspect O-ring condition before reinstalling fuel injector. Replace O-ring with a new one if damaged.

Apply some engine oil to O-rings.

Insert and secure the fuel injector in place with your hand.

⚠ WARNING

Ensure to properly lock fuel injectors with their clips.

Reinstall fuel rail. Refer to *FUEL RAIL* in this subsection.

THROTTLE BODY

Throttle Body Cleaning

Remove air intake silencer.

Check throttle body cleanliness using a flashlight. Fully open throttle plate and verify:

- Throttle body bore
- Throttle plate edge
- Air orifice.

Look for:

- Dirt
- Oily surfaces
- Carbon deposits on throttle plate and the surrounding bore.

Clean as necessary. Remove throttle body from intake manifold without disconnecting the throttle cable, hoses and wires.

Use a throttle body cleaner such as GUNK INTAKE MEDIC or the equivalent.

NOTICE Only use an appropriate throttle body cleaner that will not damage O-rings, MAPTS sensor and idle air control valve.

⚠ WARNING

Use the product in well ventilated area. Refer to product manufacturer's warnings.

To avoid getting dirt into engine, spray cleaner on a clean rag then rub rag against throttle plate and bore. A toothbrush works well too.

Fully open throttle and hold to reach all surfaces.

To remove residual dirt, spray cleaner on throttle plate and on bore.

Reinstall removed parts.

Throttle Body Inspection

NOTICE Never attempt to adjust the capped idle stop screw. It is calibrated at the factory. If the screw adjustment is changed, the throttle body must be replaced.

www.midwestmanuals.com

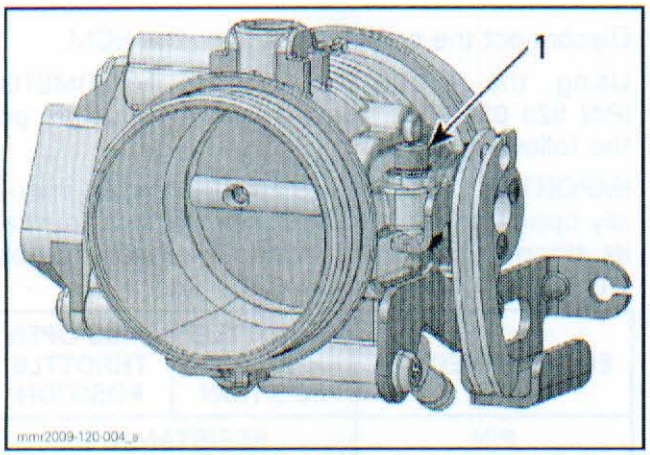

1. Capped screw (DO NOT TAMPER)

- Check if throttle body idle stop screw is loose or worn. If so, throttle body must be replaced.
- Check if TPS (throttle position sensor) is loose).
- Check for corroded or damaged wiring or connectors of TPS and IACV.

Throttle Body Removal

1. Remove LH side panel. Refer to *BODY*.
2. Remove drive belt guard. Refer to *DRIVE SYSTEM AND BRAKE*.
3. Remove air intake silencer. Refer to *AIR INTAKE SYSTEM*.
4. Disconnect TPS connector.
5. Detach throttle body from intake manifold.
6. Disconnect throttle cable from throttle body.
7. Install a SMALL HOSE PINCHER (P/N 295 000 076) on each coolant hoses connected to throttle body.
8. Disconnect coolant hoses from throttle body.
9. Remove throttle body.

Throttle Body Installation

Installation of the throttle body is the reverse of the removal procedure. However, pay attention for the following details.

Install throttle cable to throttle body.

Install throttle body on intake manifold.

Ensure throttle cable is properly locked. Activate throttle lever several times.

Check throttle cable adjustment.

Install new clamps on heating hoses using OETIKER PLIERS (P/N 295 000 070).

Refill and bleed cooling system if necessary. Refer to *COOLING SYSTEM*.

THROTTLE POSITION SENSOR (TPS)

Description

The throttle position sensor (TPS) is a potentiometer that sends a signal to the ECM which is proportional to the throttle shaft angle.

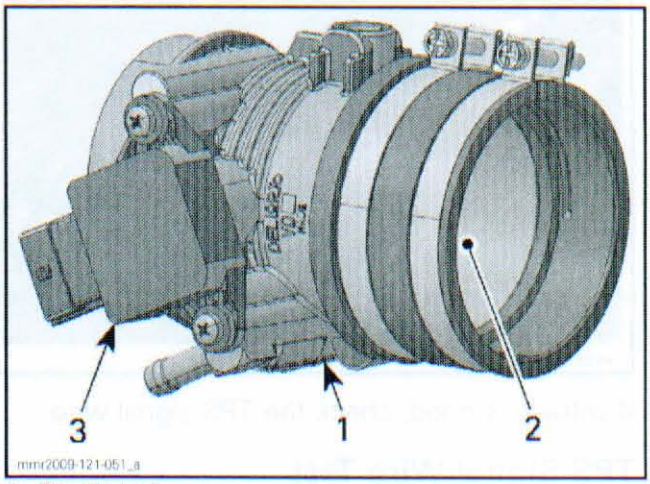

1. Throttle body
2. Throttle plate
3. TPS (Throttle Position Sensor)

TPS Wear Test

Ensure TPS connector is plugged.

While engine is not running, activate throttle and pay attention for smooth operation without physical stops of the cable.

Use B.U.D.S. software.

Use the **Throttle Opening** display under **Monitoring**.

Slowly and regularly depress the throttle. Observe the needle movement. It must change gradually and regularly as you move the throttle. If the needle "sticks", bounces, suddenly drops or if any discrepancy between the throttle movement and the needle movement is noticed, it indicates a worn TPS that needs to be replaced.

TPS Input Voltage Test

Check the voltage output from ECM to the throttle position sensor.

Disconnect TPS connector.

Use the FLUKE 115 DIGITAL MULTIMETER (P/N 529 035 868) and set it to Vdc.

Briefly press the START/RER button.

Read voltage at TPS harness connector as follows.

www.midwestmanuals.com

TPS HARNESS CONNECTOR		VOLTAGE
Pin 1	Pin 2	5.0 Vdc

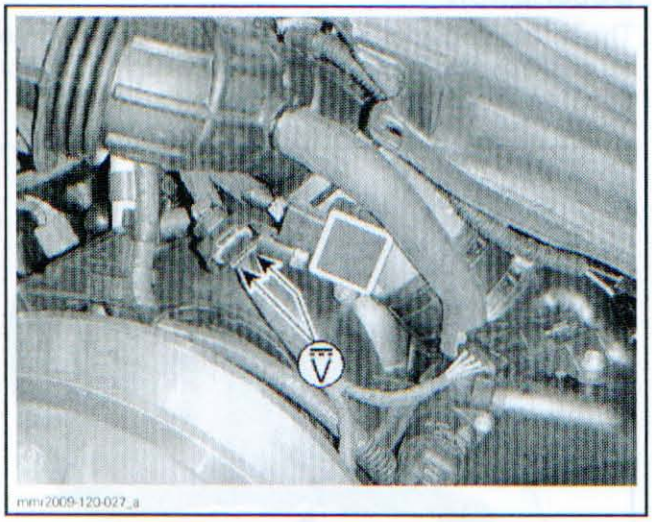

If voltage is good, check the TPS signal wire.

TPS Signal Wire Test

Disconnect the A connector from ECM.

Check the wiring continuity as follows

TPS HARNESS CONNECTOR	ECM A CONNECTOR	RESISTANCE
Pin 3	Pin A-24	Close to 0 Ω (continuity)

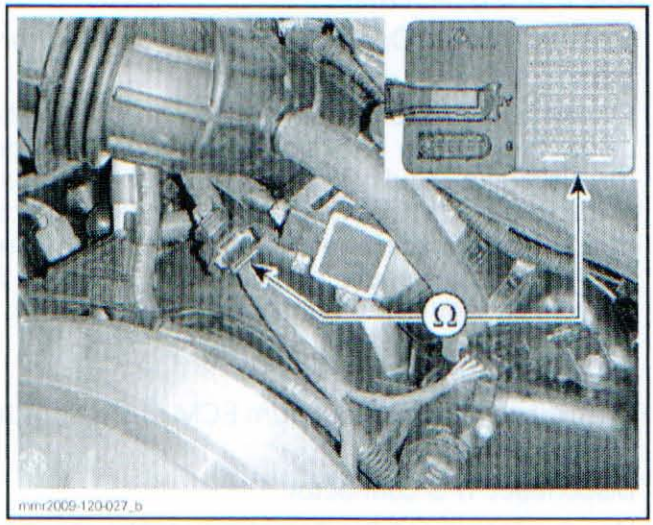

If tests are good, replace the TPS.

If tests are not good, continue to check the resistance of the rest of the TPS circuit.

TPS Resistance Test

Reconnect the TPS.

Disconnect the connector A from the ECM.

Using the FLUKE 115 DIGITAL MULTIMETER (P/N 529 035 868), check resistive value as per the following table.

IMPORTANT: For the WOT measurement, manually open the throttle plate until the cam touches its stopper. Using the throttle lever at handlebar will not fully open the throttle plate.

ECM CONNECTOR		THROTTLE IDLE POSITION	WIDE OPEN THROTTLE POSITION
PIN		RESISTANCE Ω	
A-24	A-25	880 - 1300	2390 - 2810
A-25	A-39	1600 - 2400	1600 - 2460
A-24	A-39	2390 - 2810	880 - 1300

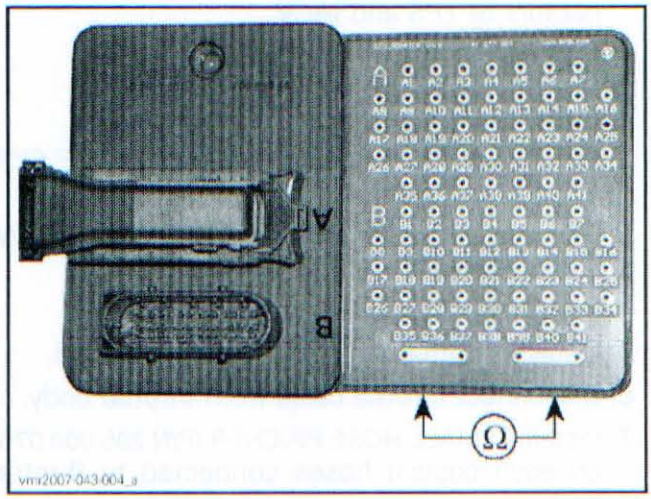

NOTE: The resistive value should change smoothly and proportionally to the throttle movement. Otherwise, replace TPS.

If resistive values are correct, try a new ECM. Refer to *ENGINE CONTROL MODULE (ECM)* elsewhere in this subsection.

If resistive values are incorrect, repair/replace wiring/connectors. If they are good, replace TPS.

TPS Removal

Remove the throttle body as described above.

Loosen TPS retaining screws.

Remove TPS.

Install the new TPS.

Apply Loctite 243 on the TPS retaining screws, then torque to 3 N•m (27 lbf•**in**).

Reinstall remaining removed parts.

Proceed with the **Closed Throttle Reset**.

www.midwestmanuals.com

TPS Installation

Install the new TPS.

Apply Loctite 243 on the TPS retaining screws, then torque to 3 N•m (27 lbf•**in**).

Reinstall remaining removed parts.

Proceed with the **Closed Throttle Reset**.

IDLE AIR CONTROL VALVE (IACV)

If IACV is to be removed, refer to *IACV REMOVAL* in this subsection. Important instructions are given to prevent damaging the IACV.

IACV Auto Setting

When engine is stopped, just before the ECM turns off, the IACV will completely close to find its zero position. It will then back out a number of steps and park to this reference position. When the ECM is powered, it assumes the IACV is at its reference position. For this reason, it is important to stop the engine by removing the D.E.S.S. key or by using the engine stop switch.

If idle speed is not stable or is inaccurate, reset the IACV as follows:

1. Power the ECM by briefly pressing the START/RER button.
2. Remove D.E.S.S. key.
3. Wait until multifunction gauge turns off.
4. Repeat the procedure 2 - 3 times.

IACV Information in B.U.D.S. Software

Start engine and let warm up.

Use B.U.D.S. and read IACV position while engine is idling.

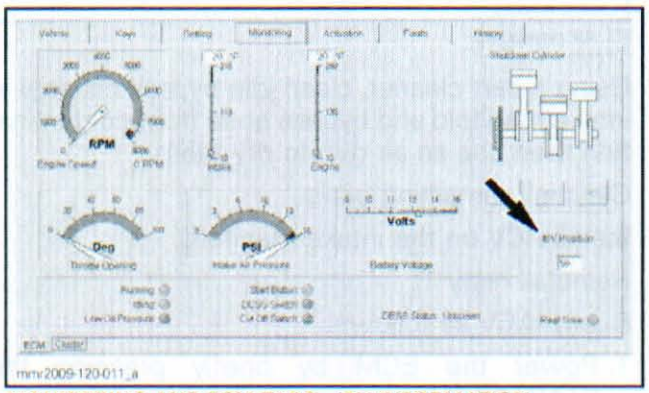

MONITORING AND ECM TABS - IBV INFORMATION

NOTE: The **IACV Position** is displayed for information purposes only.

The IACV is controlled by a stepper motor (via the ECM) and the value given is the position of the stepper motor.

The value is given in steps. See chart.

IACV STEPS IN B.U.D.S.	VALVE POSITION
0	Fully closed
Typical values: 15 - 50 (1)	Partially open
150	Fully open

(1) Typical IACV values at idle are given for a warm engine and vary depending on altitude, air temperature, throttle body and production tolerances.

The ECM constantly controls the IACV to maintain engine target idle speed when the throttle is closed.

NOTE: An engine giving an IACV position outside of this range is not necessarily faulty. It may only give clues if poor idle or light throttle behavior is experienced. Lower values may indicate a leakage in the air intake system or in the idle air control system. Higher values may suggest a dirty throttle body, obstructed idle bypass passages etc.

IACV Resistance Test (at Component)

An idle air control valve with good resistance measurement can still be faulty. It is also possible that a mechanical failure occurs which is not detectable without measuring the air flow. Replacing the IACV may be necessary as a test.

Disconnect IACV connector.

Remove IACV from intake manifold.

Check the resistance between pins as follows.

IACV		MEASUREMENT
PIN		RESISTANCE @ 20°C (68°F)
1	4	Approximately 50 Ω
2	3	

www.midwestmanuals.com

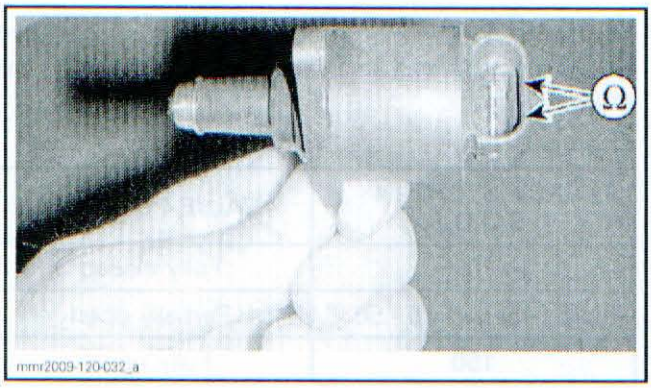

If the resistance of any winding is inadequate, replace the IACV.

If resistance test of valve windings is good, check continuity of circuits A-35, A-36, A-37 and A-38.

IACV Resistance Test (at ECM Connector)

Reconnect IACV connector.

Disconnect ECM A connector.

Use ECM ADAPTER TOOL (2 CONNECTORS) (P/N 420 277 010) and a multimeter.

Set multimeter to Ω and read resistance as follows.

ECM CONNECTOR		MEASUREMENT
PIN		RESISTANCE @ 20°C (68°F)
A-35	A-36	See above
A-37	A-38	

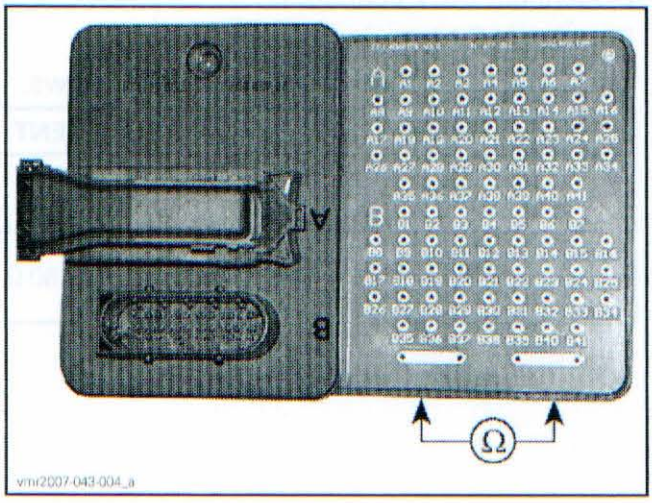

If any resistance test failed, repair/replace wiring/connectors between IACV and ECM.

If resistance test are good and all valve tests has been done, check ECM. Refer to *ECM*.

IACV Visual Inspection and Cleaning

Remove IACV from intake manifold. Refer to *IACV REMOVAL* in this subsection. Important instructions are given to prevent damaging the IACV.

Check the piston and bypass channel for dirt or deposits which can cause a sticking piston.

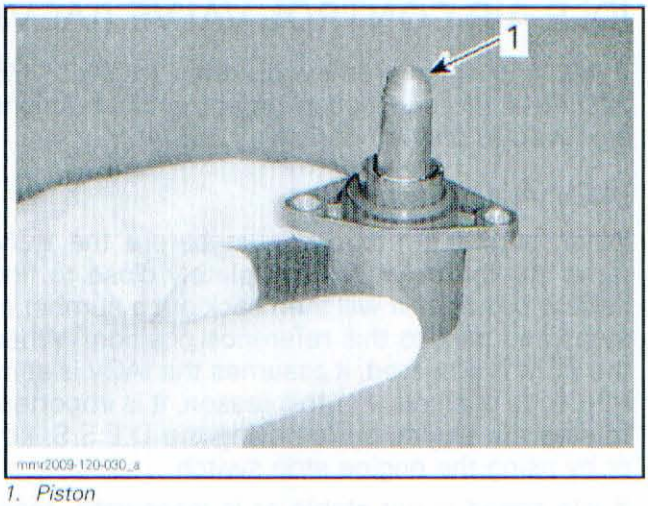

1. Piston

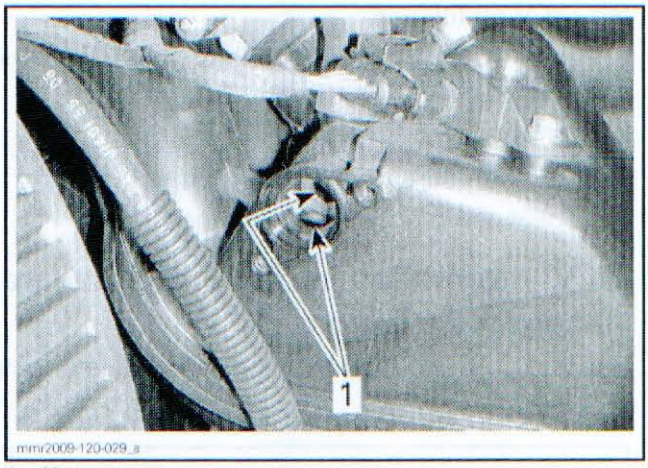

1. Air passages

Using a part cleaner, clean idle bypass channel in intake manifold and bypass hose from contamination then use an air gun to dry them.

Clean all remaining parts.

Install ACV on the intake manifold.

Reinstall relay 1.

Reset IACV as follows:

1. Power the ECM by briefly pressing the START/RER button.
2. Remove D.E.S.S. key.
3. Wait until multifunction gauge turns off.
4. Repeat the procedure 2 - 3 times.

www.midwestmanuals.com

IACV Removal

Remove relay 1.

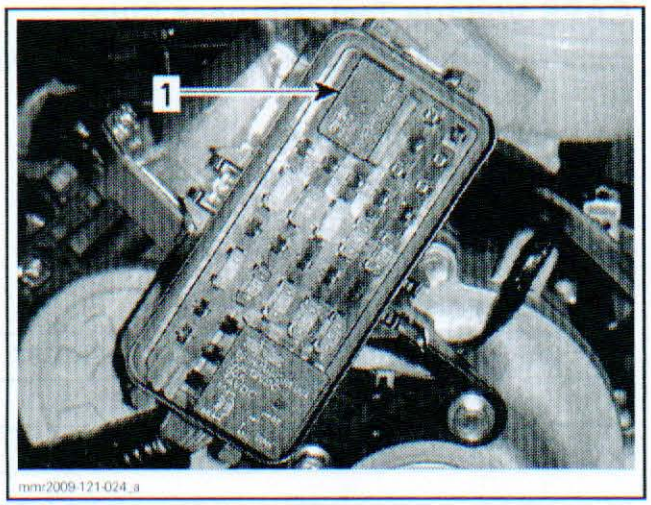

1. Relay 1

NOTICE Always make sure relay 1 is not installed while the IACV is removed. Do not try to operate the piston of the IACV when it is dismounted. Also do not move the piston by hand. The screw drive is very sensitive and will be damaged.

Remove retaining screw.

Pull out IACV.

IACV Installation

Check IACV O-ring condition. Replace as necessary.

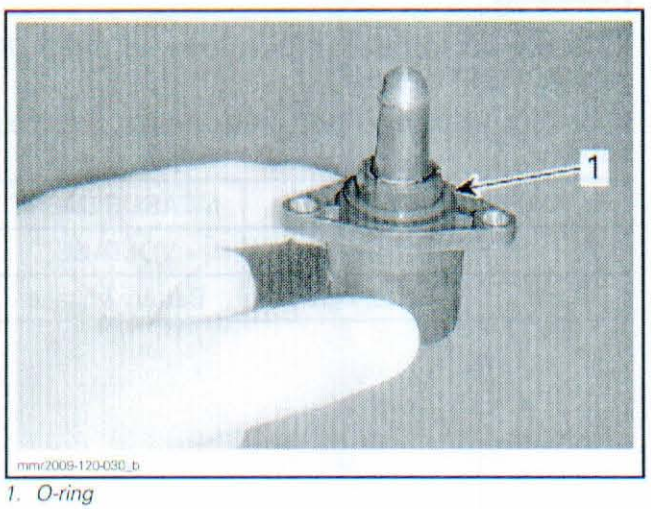

1. O-ring

Install IACV.

Torque screws to 3 N•m (27 lbf•**in**).

CRANKSHAFT POSITION SENSOR (CPS)

NOTE: If fault code P0339 is present and CPS succeeded to all tests below, refer to *MONITORING SYSTEM AND FAULT CODES*.

CPS Output Voltage Test

Disconnect CPS connector.

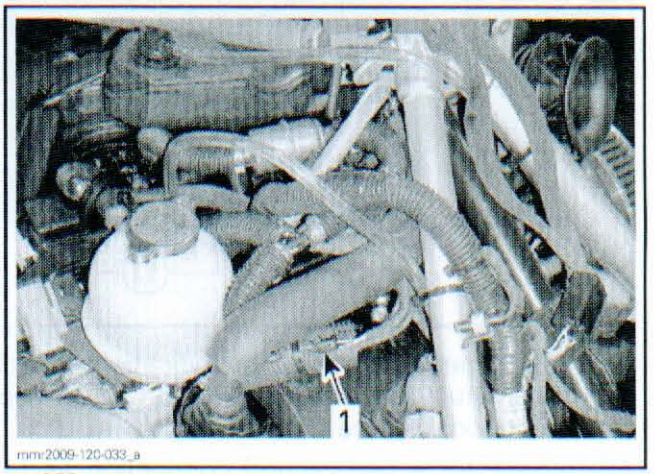

1. CPS connector

Probe terminals coming from CPS while cranking engine.

CPS CONNECTOR		VOLTAGE
Pin 1	Pin 2	1 - 2 Vac min.

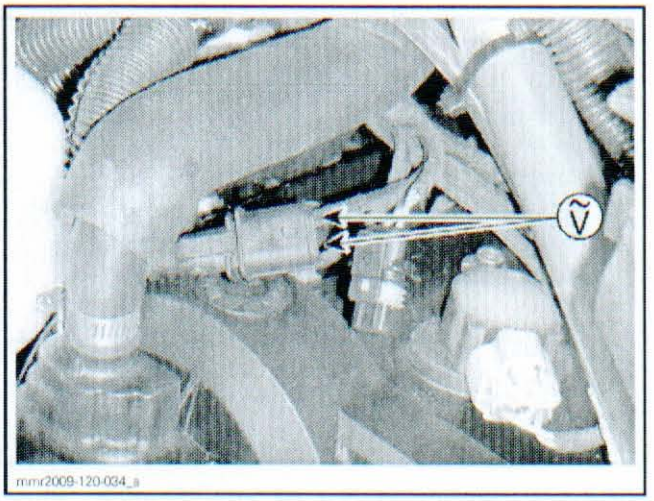

If voltage is out of specification, inspect wiring/connectors. Replace CPS if wiring is good.

CPS Resistance Test

Disconnect connector A from ECM.

Reconnect CPS connector.

Measure the resistance of the sensor itself.

www.midwestmanuals.com

ECM A CONNECTOR		RESISTANCE @ 20°C (68°F)
Pin A-5	Pin A-19	775 - 950 Ω

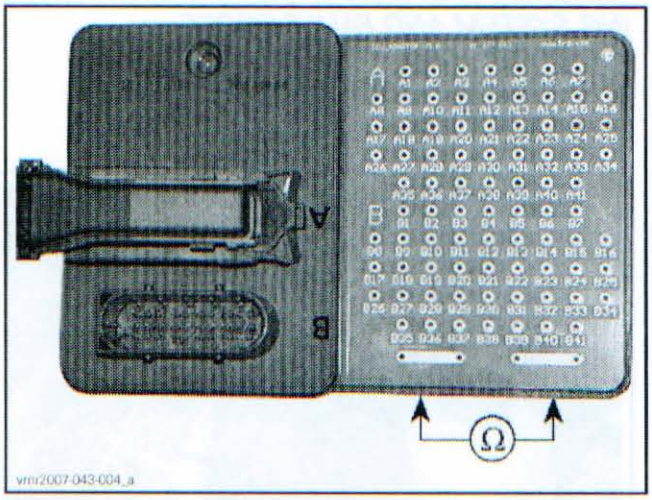

If measurement is out of specification, check wiring continuity between ECM and CPS. If continuity is good, replace CPS.

Also check for a bad ground connection as follows.

ECM A CONNECTOR		RESISTANCE @ 20°C (68°F)
Pin A-5	Engine ground	Open circuit (OL)
Pin A-19	Engine ground	

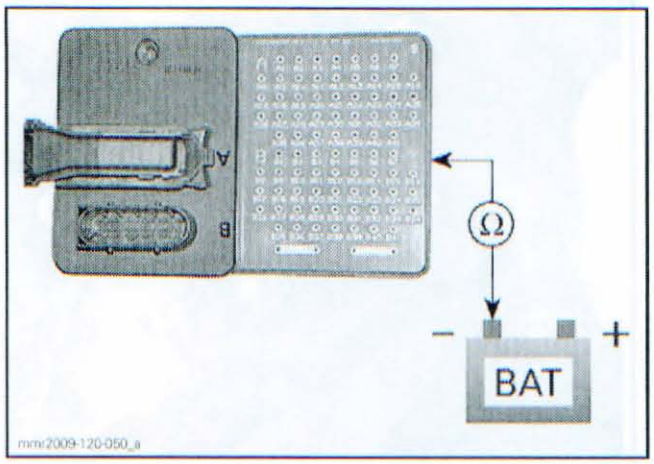

If measurement is out of specification, check wiring between ECM and CPS.

CPS Replacement

Refer to *MAGNETO SYSTEM*.

CAMSHAFT POSITION SENSOR (CAPS)

CAPS Voltage Test (Harness Side)

Remove air intake silencer. Refer to *AIR INTAKE SYSTEM*.

Disconnect CAPS connector.

Briefly press START/RER button.

NOTE: Do not install D.E.S.S. key.

Use a multimeter and select Vdc.

Probe terminals as shown.

CAPS CONNECTOR		MEASUREMENT
PIN		VOLTAGE
1	3	Battery voltage

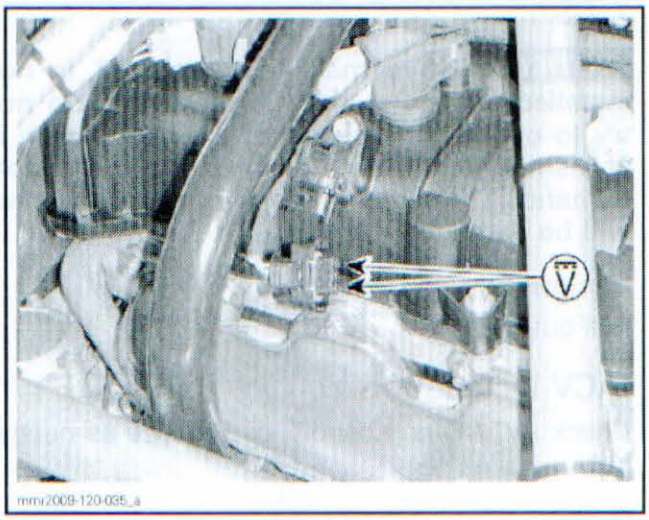

If battery voltage is read, proceed with *CAPS DYNAMIC TEST* further.

If battery voltage is not read, probe circuit as shown.

CAPS CONNECTOR		MEASUREMENT
PIN		VOLTAGE
3	Battery ground	Battery voltage

www.midwestmanuals.com

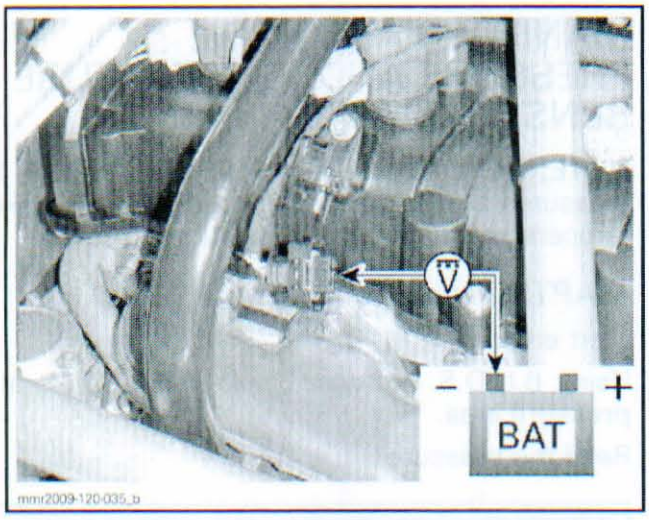

If battery voltage is read, check ground circuit for continuity. Repair wire/connector if defective.

If voltage is not read, check power supply circuit for continuity.

Power Supply Circuit Test

Remove relay 1 from fuse box.

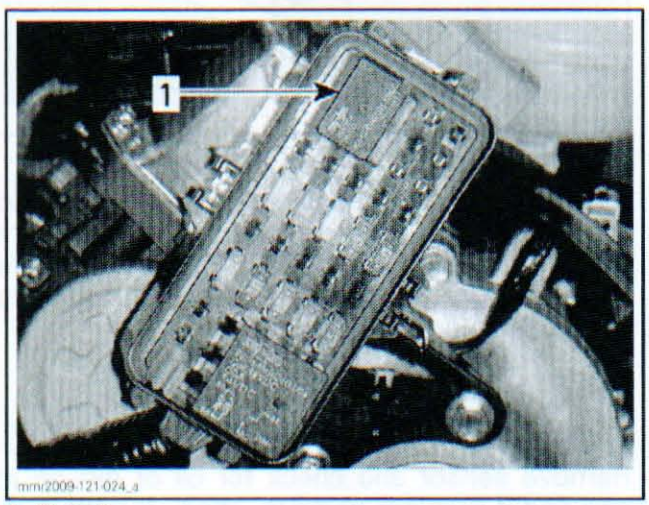

1. Relay 1

Use a multimeter and select Ω.

RELAY FUSE BOX	CAPS CONNECTOR	RESISTANCE
TERMINAL	PIN	Ω
12E	3	Close to 0 Ω (continuity)

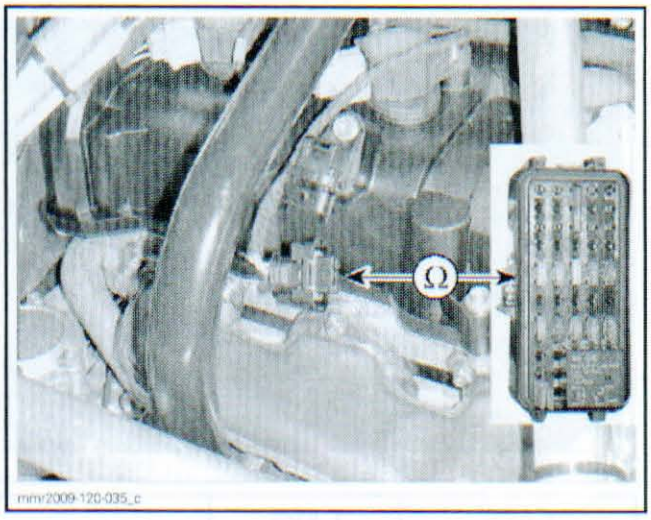

Reinstall relay 1.

If resistance is out of specification, repair wire/connector between fuse box and CAPS.

If resistance is as per specification, power circuit is functional.

CAPS Dynamic Test

Remove CAPS sensor from engine.

Use the FLUKE 115 DIGITAL MULTIMETER (P/N 529 035 868).

Back-probe connector using FLUKE RIGID BACK PROBE (P/N TP88) or the equivalent.

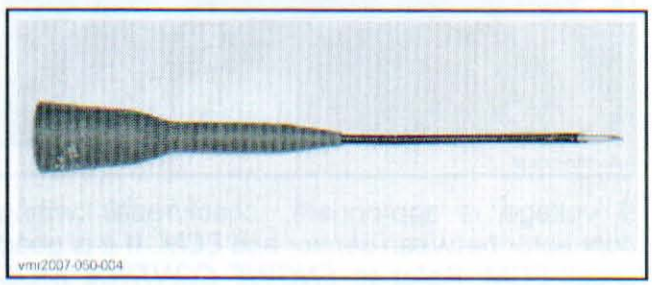

Set multimeter to Vdc and read voltage.

CAPS CONDITION	CAPS CONNECTOR		VOLTAGE
Free	2	3	Close to 0 Vdc

www.midwestmanuals.com

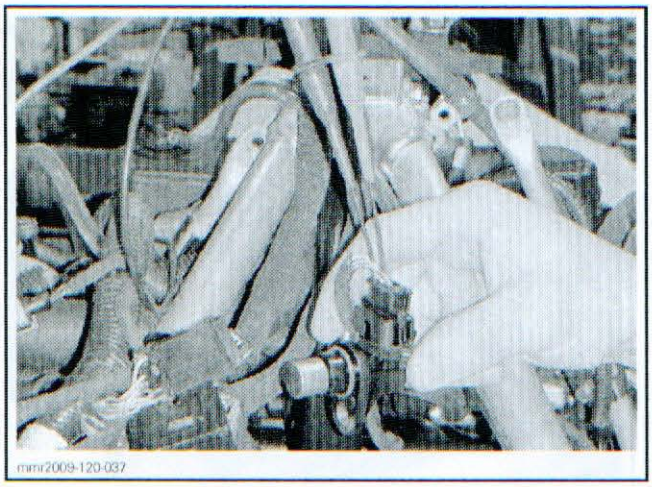
mmr2009-120-037

CAPS CONDITION	CAPS CONNECTOR		VOLTAGE
Metallic object on sensor	2	3	Battery voltage

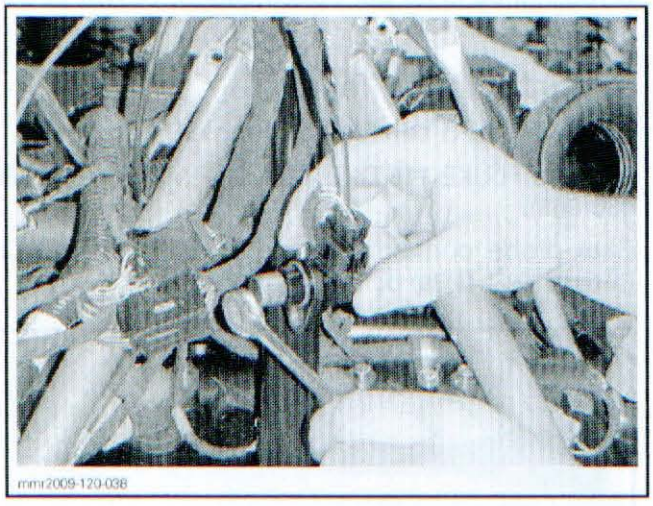
mmr2009-120-038

If voltage is appropriate, check/repair wiring/connector between sensor and ECM. If it is good, check ECM. Refer to *ENGINE CONTROL MODULE (ECM).*

If voltage is wrong, try a new CAPS.

CAPS Removal

Unscrew the retaining screw and pull out CAPS.

CAPS Installation

Apply engine oil on CAPS O-ring.

Apply Loctite 243 (blue) on threads and torque screws to 11 N•m (97 lbf•**in**).

MANIFOLD ABSOLUTE PRESSURE AND TEMPERATURE SENSOR (MAPTS)

NOTE: This sensor is a multifunction device. It measures manifold absolute pressure and intake temperature for air flow calculations.

MAPTS Pressure Test with B.U.D.S.

Start engine.

Using B.U.D.S. software, look at the **Intake air pressure** area.

Read the pressure.

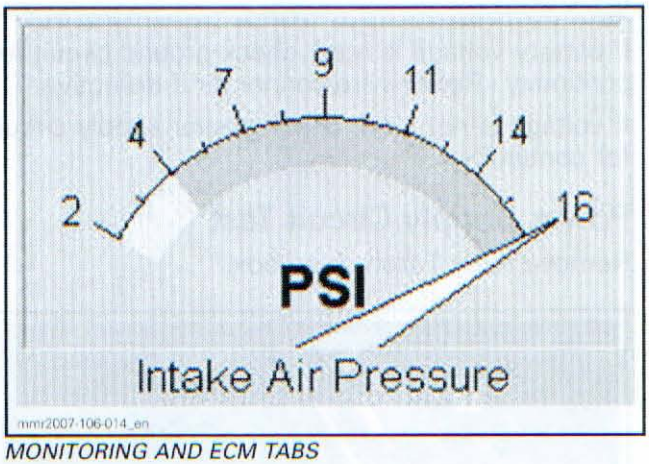

mmr2007-106-014_en

MONITORING AND ECM TABS

The intake pressure should be equal to the atmospheric pressure when the engine is stopped and within 34.47 kPa - 48.26 kPa (5 PSI - 7 PSI) at idle. Otherwise, carry out the test pertaining to the sensor pressure function.

MAPTS Pressure Function

Remove drive belt guard. Refer to *DRIVE BELT.*

Remove sensor and check for oil or dirt on its end and if problem persists, check throttle plate condition/position and the wiring harness. Perform the following tests.

MAPTS Input Voltage Test

Disconnect connector from MAPTS.

Use a multimeter and select Vdc.

Briefly push START/RER button.

Read voltage as follows.

MAPTS CONNECTOR		MEASUREMENT
PIN		VOLTAGE
1	3	5 Vdc

www.midwestmanuals.com

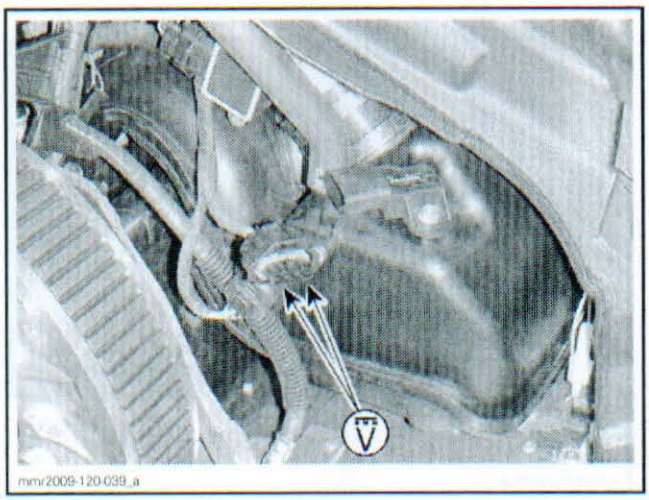

If voltage test is good, Check continuity of wiring from pin 4 to ECM. If it is good, replace the MAPTS.

If voltage test is not good, check the continuity of the MAPTS circuit.

MAPTS Circuit Continuity Test

Disconnect the connector A from the ECM.

Install ECM ADAPTER TOOL (2 CONNECTORS) (P/N 420 277 010) on ECM connector.

Use a multimeter and select Ω.

Check continuity of sensor pin circuits 1, 3 and 4. Refer to *WIRING DIAGRAM*.

If wiring harness is good, try a new ECM. Refer to *ECM*.

Otherwise, repair or replace wiring harness between ECM and MAPTS. Refer to *WIRING DIAGRAM*.

MAPTS Temperature Function

The sensor also monitors the temperature at intake manifold.

Temperature Test with B.U.D.S.

Using B.U.D.S. software, look at the **Intake** area.

Briefly press START/RER button.

Read the temperature value in B.U.D.S.

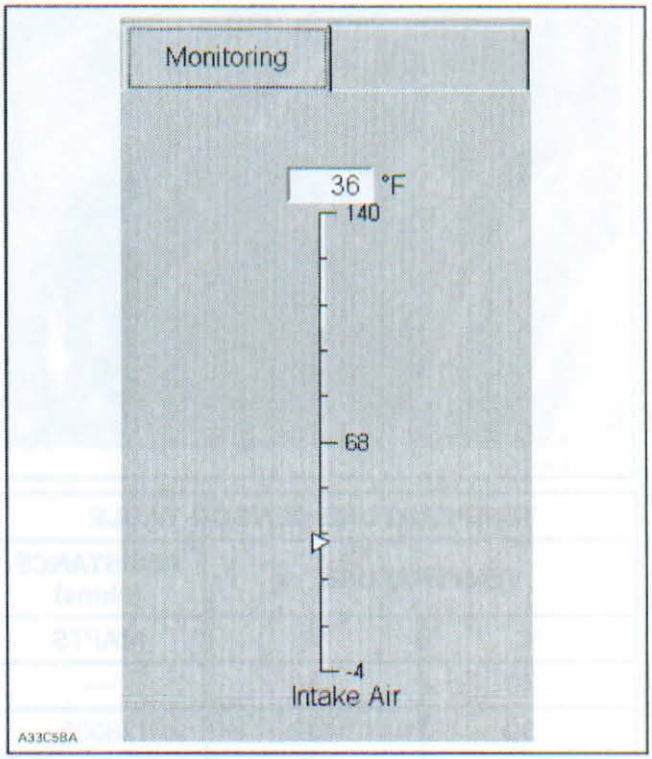

MONITORING AND ECM TABS

If the complete vehicle is at room temperature, B.U.D.S. should display the ambient temperature at the intake manifold. Otherwise, carry out the test pertaining to the sensor temperature function.

MAPTS Resistance Test

Disconnect the connector from MAPTS.

Use a multimeter and select Ω.

Read resistance of sensor.

MAPTS		MEASUREMENT
PIN		RESISTANCE Ω @ 20°C (68°F)
1	2	Use table according to temperature

www.midwestmanuals.com

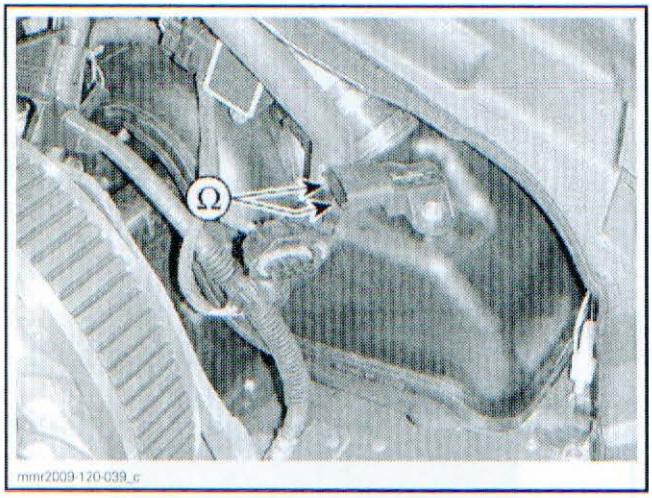

TEMPERATURE SENSOR TABLE		
TEMPERATURE		RESISTANCE (ohms)
°C	°F	MAPTS
- 40	- 40	—
- 30	- 22	28000
- 20	- 4	15000
0	32	5500
20	68	2500
40	104	1200
60	140	600
80	176	320
100	212	180
130	266	90

If resistance is not within specification, replace the MAPTS.

If resistance tests good, reconnect the MAPTS.

Disconnect the connector A from the ECM.

Install ECM ADAPTER TOOL (2 CONNECTORS) (P/N 420 277 010) on ECM connector.

Use a multimeter and select Ω.

Check resistance value between ECM pins as shown.

ECM CONNECTOR		MEASUREMENT
PIN		RESISTANCE Ω @ 20°C (68°F)
A-7	A-28	See above

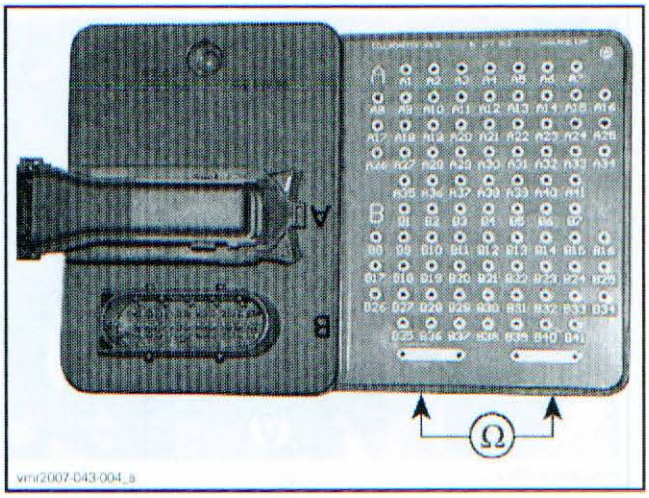

If resistance value is incorrect, inspect/repair/replace wiring harness between ECM connector and the MAPTS.

If resistance value is correct, try a new ECM. Refer to *ECM*.

MAPTS Removal

Disconnect MAPTS connector and remove the MAPTS.

MAPTS Installation

Apply LOCTITE 243 (BLUE) (P/N 293 800 060) on screw then torque to 6 N•m (53 lbf•**in**).

COOLANT TEMPERATURE SENSOR (CTS)

The coolant temperature sensor is located on rear side of the cylinder head.

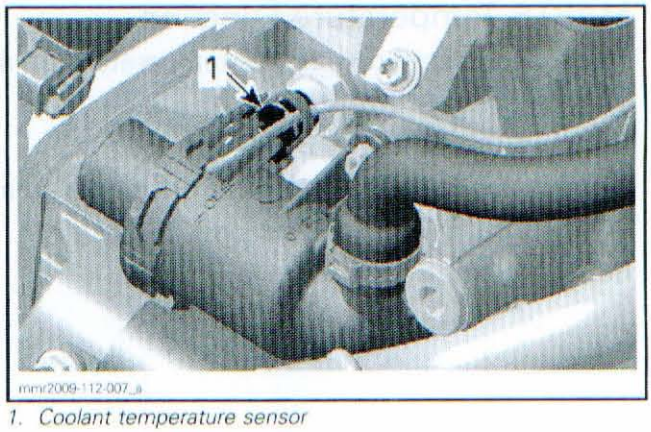

1. Coolant temperature sensor

NOTE: Overheat signals will appear when coolant temperature reaches 110°C (230°F).

CTS Sensor Dynamic Test

Use B.U.D.S. software.

www.midwestmanuals.com

Look engine temperature in **ECM** page in the **Monitoring** tab. It should show the coolant temperature. Otherwise, perform the *CTS RESISTANCE TEST.*

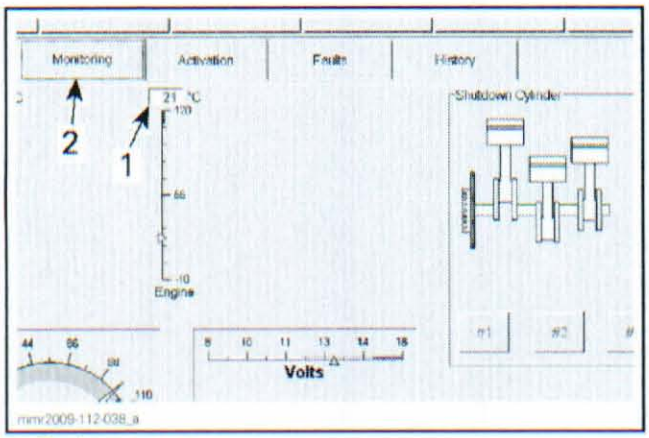

1. *Engine temperature*
2. *Monitoring tab*

CTS Sensor Resistance Test

1. Move fuel tank rearward. Refer to *FUEL TANK AND FUEL PUMP* subsection.
2. Remove the driven pulley. Refer to *DRIVEN PULLEY AND COUNTERSHAFT* subsection.
3. Disconnect the connector from the CTS sensor and check the resistance of the sensor itself.

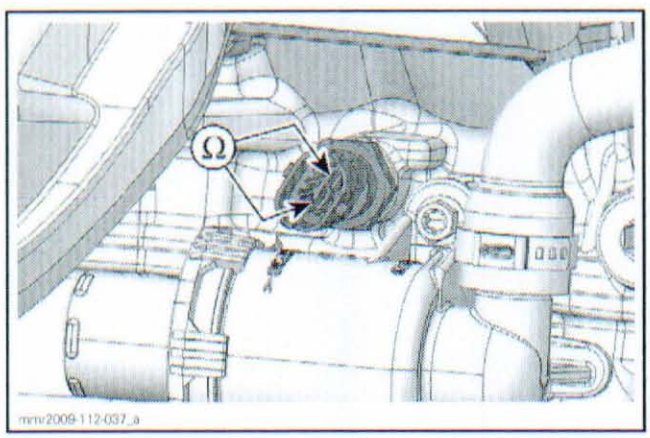

The resistance should be as per following chart.

TEMPERATURE		RESISTANCE (OHMS)		
°C	°F	NOMINAL	LOW	HIGH
- 30	- 22	12600	11800	13400
- 20	- 4	11400	11000	11800
- 10	14	9500	8000	11,000
0	32	5900	4900	6900
10	50	3800	3100	4500
20	68	2500	2200	2800
30	86	1700	1500	1900
40	104	1200	1080	1320
50	122	840	750	930
60	140	630	510	750
70	158	440	370	510
80	176	325	280	370
90	194	245	210	280
100	212	195	160	210
110	230	145	125	160
120	248	115	100	125

NOTE: To test sensor at different temperatures, remove sensor and use a heat gun and cold ice as required.

If resistance is out of specification, replace the CTS sensor.

If resistance tests good, check the CTS sensor circuit continuity.

CTS Sensor Circuit Continuity Test (with Sensor)

1. Connect the CTS sensor.
2. Remove the air intake silencer and disconnect the ECM connector A on the ECM.
3. Using the FLUKE 115 DIGITAL MULTIMETER (P/N 529 035 868) and the ECM ADAPTER TOOL (2 CONNECTORS) (P/N 420 277 010), check the circuit resistance as per the following table.

ECM ADAPTER		MEASUREMENT
PIN		RESISTANCE Ω
A-11	A-27	See table above

www.midwestmanuals.com



FLUKE 115 MULTIMETER

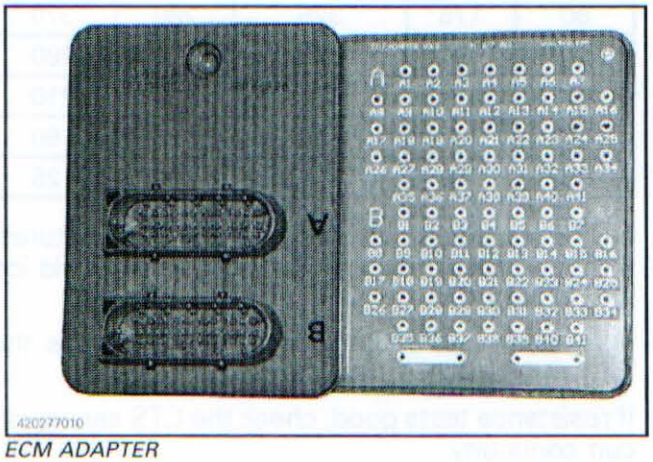

ECM ADAPTER

If resistance value is correct, check ECM. See procedure in this subsection.

If resistance value is incorrect, repair the connectors or replace the wiring harness between ECM connector and the CTS sensor.

CTS Sensor Replacement

1. Move fuel tank rearward. Refer to *FUEL TANK AND FUEL PUMP* subsection.
2. Remove the driven pulley. Refer to *DRIVEN PULLEY AND COUNTERSHAFT* subsection.
3. Disconnect the connector from the CTS sensor.
4. Unscrew and remove the CTS sensor.
5. Install the new CTS sensor.
6. Tighten CTS sensor to 16 N•m (142 lbf•**in**).
7. Reinstall removed parts.
8. Refill engine coolant. If an important quantity of coolant is spilled, bleed cooling system. Refer to *ENGINE COOLANT* in this subsection.

www.midwestmanuals.com

FUEL TANK AND FUEL PUMP

SERVICE TOOLS

Description	Part Number	Page
ECM ADAPTER TOOL (2 CONNECTORS)	420 277 010	227
FLUKE 115 DIGITAL MULTIMETER	529 035 868	226, 229, 231
FUEL HOSE ADAPTER	529 036 023	220
FUEL PUMP NUT TOOL	529 036 118	227–228
LEAK TEST KIT (FUEL/OIL)	529 033 100	218
OETIKER PLIERS	295 000 070	222
PRESSURE GAUGE	529 035 709	220
SMALL HOSE PINCHER	295 000 076	217
T-HARNESS	529 035 869	217, 220
VACUUM PRESSURE PUMP	529 021 800	218–219

SERVICE PRODUCTS

Description	Part Number	Page
DIELECTRIC GREASE	293 550 004	233

www.midwestmanuals.com

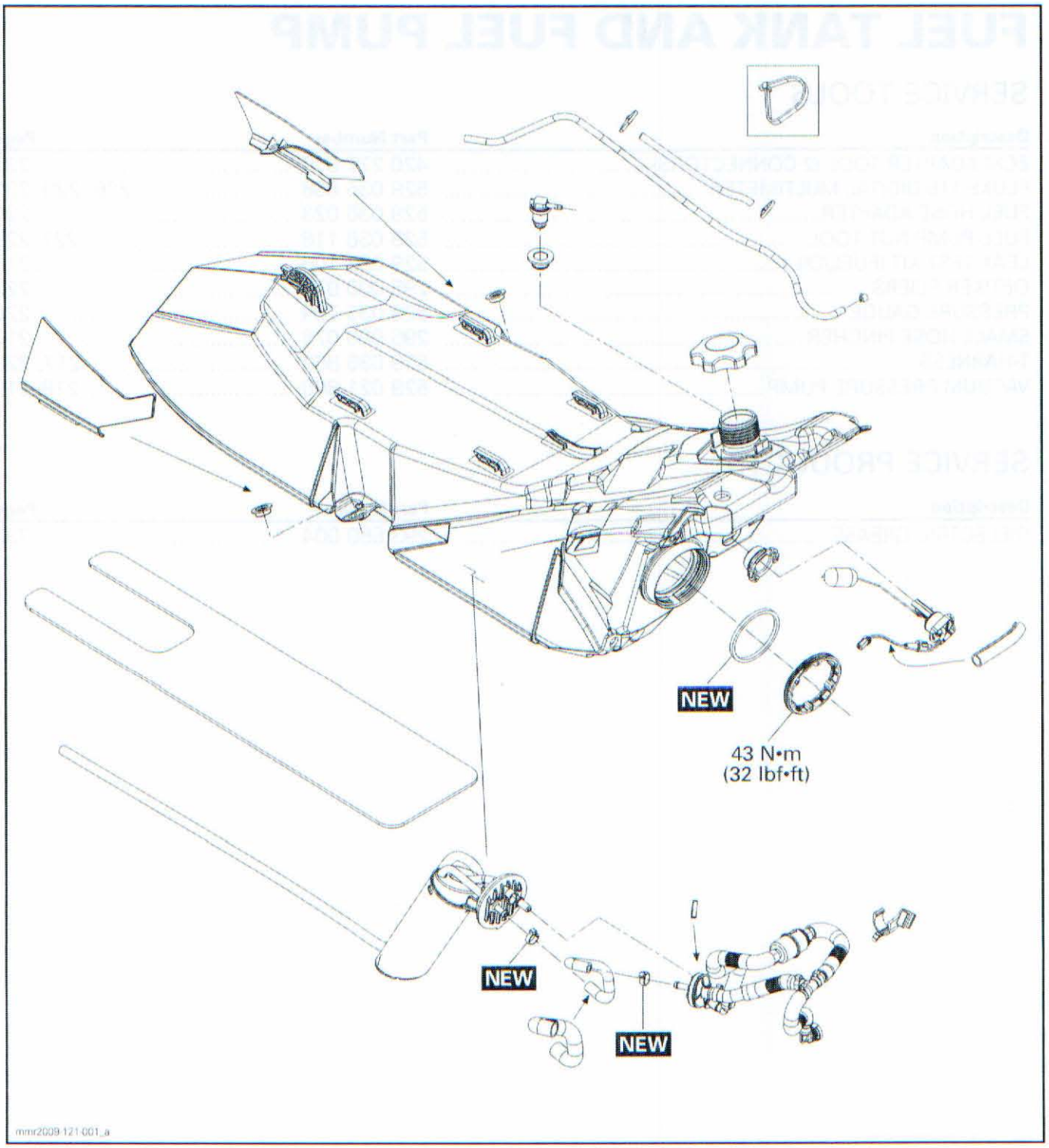

www.midwestmanuals.com

GENERAL

NOTE: It is a good practice to check for fault codes using B.U.D.S. software as a first troubleshooting step. Refer to *MONITORING SYSTEM AND FAULT CODES.*

⚠ WARNING

Always disconnect battery prior to working on the fuel system.

⚠ WARNING

Always proceed with care and use appropriate safety equipment when working on pressurized fuel system. Wear safety glasses and work in a well ventilated area. Fuel lines remain under pressure at all times.

Always release fuel pressure before disconnecting a fuel hose. Refer to *FUEL PUMP* in this subsection.

⚠ WARNING

The fuel hose may be under pressure. Cover the fuel line connection with an absorbent shop rag. Slowly disconnect the fuel hose to release the remaining pressure. Do not allow fuel to spill on hot parts. Fuel is flammable and explosive under certain conditions. Wipe off any fuel spillage inside engine compartment.

⚠ WARNING

After working on the fuel system, pressurize the fuel system to check for leaks. Refer to *FUEL SYSTEM PRESSURIZATION.* Failure to do so may result in severe injury or a life threatening situation should a leak occur.

SYSTEM DESCRIPTION

Electric Fuel Pump

The electric fuel pump is mounted in the front RH upper part of fuel tank.

A 12 V fuel pump with a jet pump is used.

As soon as the START/RER button is depressed, the electric fuel pump turns on and when engine runs, the fuel pump is continuously on to provide fuel to the injectors.

To ensure a constant delivery of fuel to the engine for uphill, downhill or sideways riding conditions when the fuel quantity is low, a rear pickup and a sump tank at the bottom of the fuel pump module is used. A combination check valve allows the pump to draw fuel either from the front inlet or from the rear pickup.

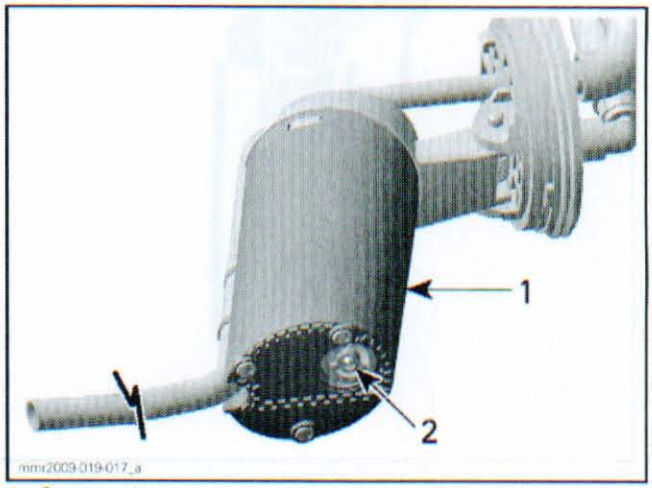

1. *Sump tank*
2. *Check valve*

The sump tank encompasses the fuel pump.

When there is enough fuel in the fuel tank, the bottom inlet of the fuel pump draws fuel from the sump tank.

When the fuel pump runs in this condition, fuel from the electric pump flows through a jet pump that contains a restrictor.

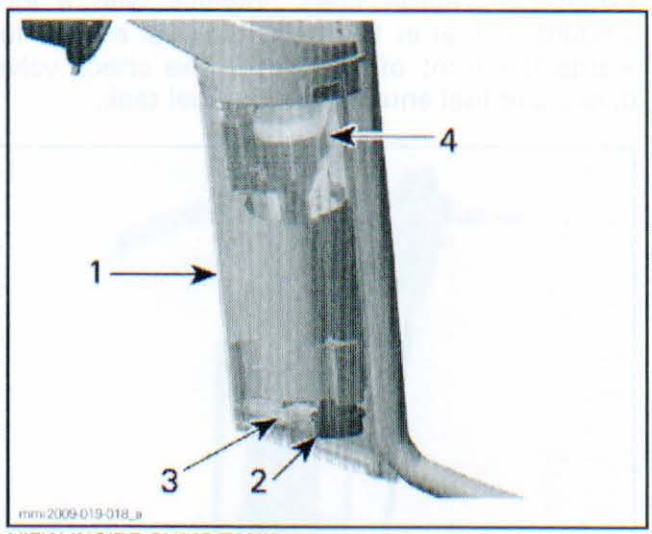

VIEW INSIDE SUMP TANK
1. *Sump tank*
2. *Bottom inlet*
3. *Check valve (open upwards)*
4. *Restrictor*

As the fuel accelerates through the restrictor, it generates a low pressure area at a connection to the rear pickup, which draws in fuel to fill the sump tank.

www.midwestmanuals.com

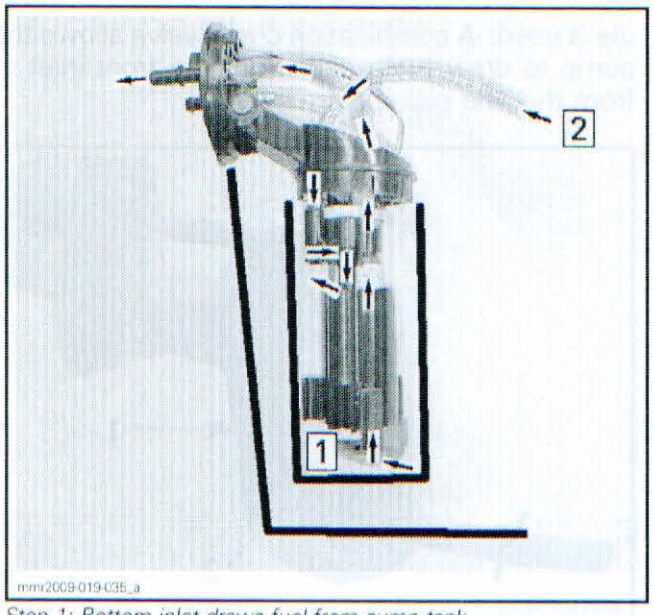

Step 1: Bottom inlet draws fuel from sump tank
Step 2: Low pressure from restrictor draws fuel from rear pickup to fill sump tank

At the bottom of the sump tank, a check valve allows the fuel in the fuel tank to enter the sump tank.

As the fuel is drawn out of the sump tank by the electric pump, fuel in the vehicle tank naturally enters the sump tank through the sump tank check valve.

When the vehicle rides downhill with a low amount of fuel in the tank, the fuel moves towards the front of fuel tank. The check valve opens and fuel enters from the fuel tank.

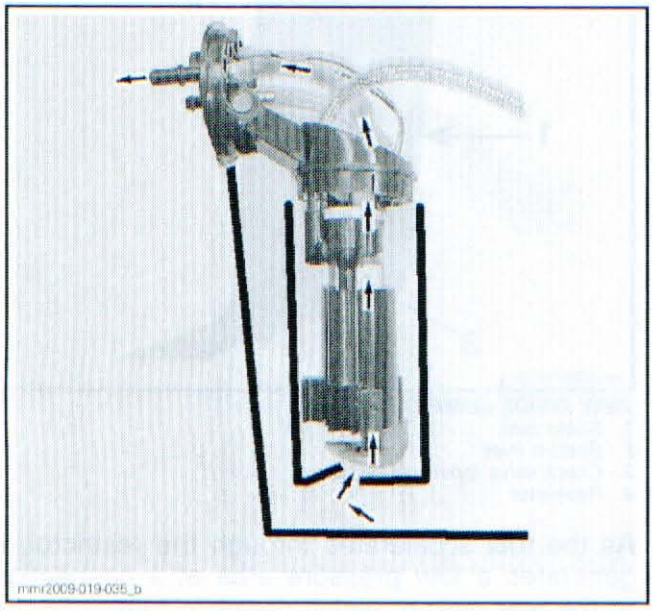

When the vehicle rides uphill with a low amount of fuel in the tank, the gas moves towards the rear of the fuel tank. The check valve closes and traps the fuel in the sump tank. The fuel pump draws fuel from the sump tank, which is fed by the rear pickup (as explained above). This prevents air from being drawn into the fuel lines from the fuel tank.

The continuous fuel flow cools down the fuel pump.

Fuel Pickup

Fuel enters into the sump tank from either an inlet at the bottom of the sump tank, or from a remote pickup in the rear portion of the fuel tank.

The bottom fuel pump inlet uses a nylon mesh filter, and the rear pickup uses a replaceable strainer to filter out relatively large dirt particles.

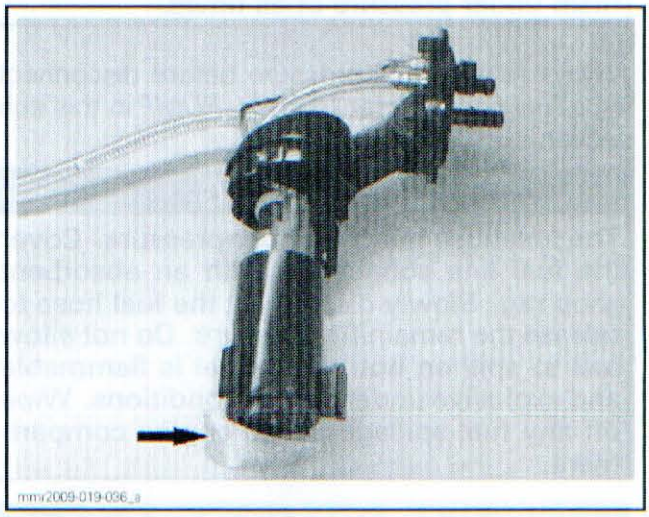

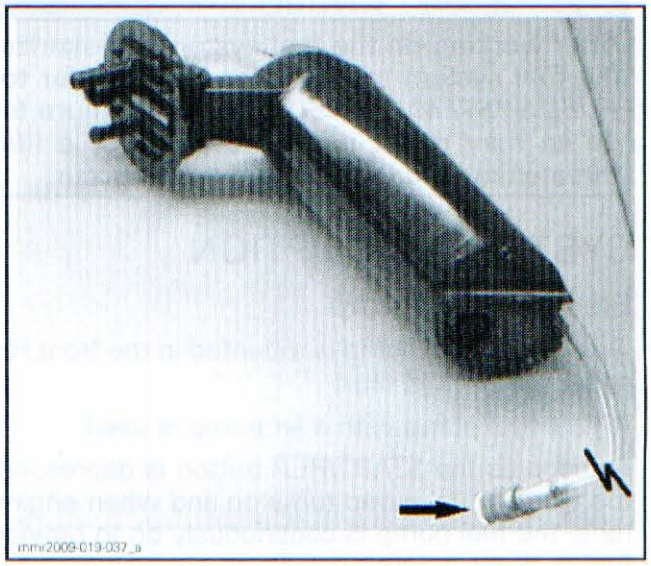

www.midwestmanuals.com

Fuel Pressure Regulator

An external in-line fuel pressure regulator made of plastic is mounted in front of fuel tank. It is basically a spring loaded valve that opens and closes the path of fuel returning to the tank, thus maintaining a constant fuel pressure in the system.

FUEL PRESSURE
Approximately 400 kPa (58 PSI)

Fuel Tank Vent

The fuel tank is vented through a combination type check valve that allows ambient air pressure to enter fuel tank at all times.

As fuel is consumed by the engine, a negative pressure would occur in the fuel tank. This could eventually prevent the engine from receiving proper fuel pressure. The **zero pressure relieve function** of the valve allows the higher outside air pressure in.

If pressure builds up and exceeds 2.0 to 4.8 kPa (.3 to .7 PSI) in the fuel tank, the check valve opens and lets the excess pressure vent out of the tank.

In-Line Fuel Filter

An in-line filter is located in front of fuel tank.

It is a replaceable metallic canister type filter used to deliver dirt-free fuel to the injectors.

The fuel filter is sold as a kit that comprises an assembly of hoses, the filter, and the quick connect fittings.

Fuel Level Indication

A float type fuel level sensor varies its resistance with fuel level thus providing a signal to the multifunction gauge for fuel level indication.

INSPECTION

FUEL SYSTEM PRESSURIZATION

⚠ WARNING

Before starting the engine, carry out a fuel system pressurization as follows each time a component has been removed from the fuel system.

1. Ensure all fuel lines are properly connected.
2. Set engine stop switch to RUN.

NOTE: Do NOT install the D.E.S.S. key.

3. Install the T-HARNESS (P/N 529 035 869) to the vehicle diagnostic connector. This will pressurize the fuel system. It may be necessary to disconnect and reconnect T-harness 3 - 4 times to cycle fuel pump to bleed air.
4. Inspect engine compartment to detect any fuel leakage or an abnormally strong fuel odor which may be an indication of a fuel leak that is not readily visible.
5. Repair any leak before using vehicle.

FUEL TANK LEAK TEST

1. Remove the RH side panel to access the fuel vent line.

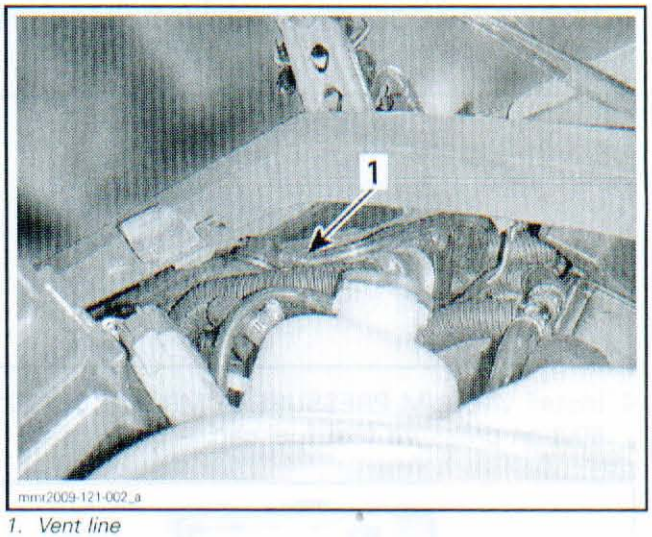

1. Vent line

2. Install a SMALL HOSE PINCHER (P/N 295 000 076) on the vent line.

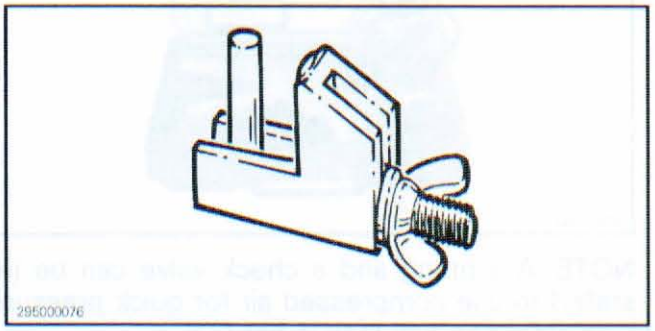

www.midwestmanuals.com

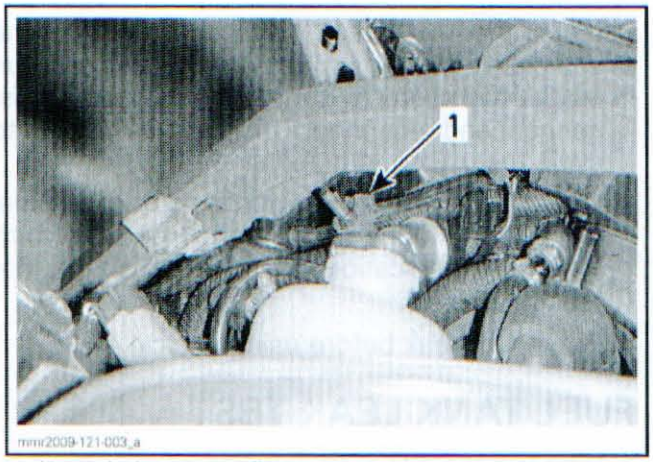

1. Hose pincher on vent line

3. Install the appropriate test cap from the LEAK TEST KIT (FUEL/OIL) (P/N 529 033 100) on fuel tank neck.

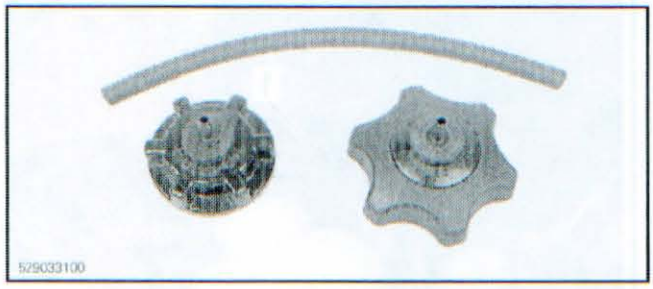

4. Install VACUUM PRESSURE PUMP (P/N 529 021 800) on pressure test fuel cap.



NOTE: A Y-fitting and a check valve can be installed to use compressed air for quick pressure build-up when fuel tank is not full.

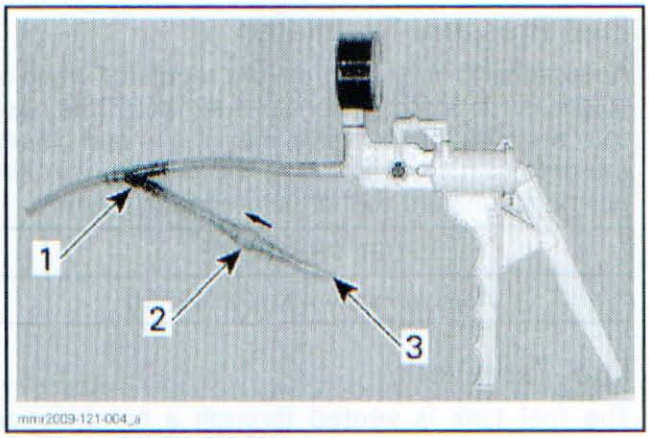

1. Y-fitting P/N 293 710 059
2. Check valve P/N 275 500 505
3. Apply compressed air here

5. Slowly apply pressurized air close to the pressure specification.

NOTICE Do not exceed the specification when pressurizing the fuel tank.

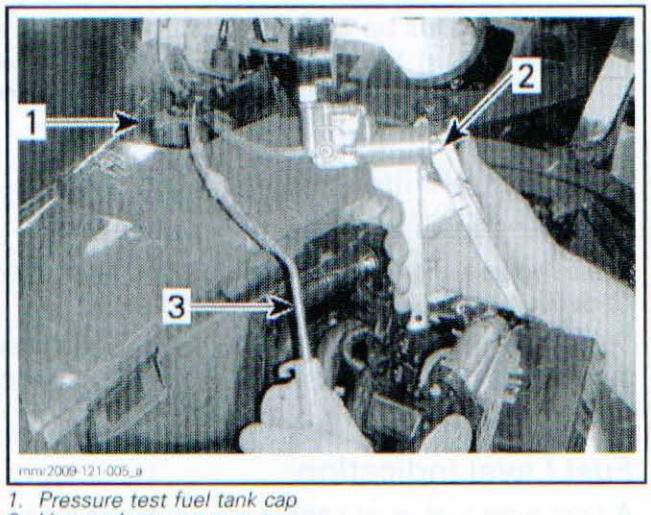

1. Pressure test fuel tank cap
2. Vacuum/pressure pump
3. Compressed air supply

6. Set pump selector to pressure.
7. Finish pressurizing fuel tank with the pump.

PRESSURE	TIME WITHOUT PRESSURE DROP
21 kPa (3 PSI)	3 minutes

If pressure drops, locate fuel leak and repair or replace leaking component.

To ease locating a leak, spray soapy water on components; bubbles will indicate leak location.

www.midwestmanuals.com

Fuel Tank Check Valve Test

While the fuel tank is still pressurized from the previous test, carry out the following:

1. Place a finger over the fuel tank vent hose outlet on LH side of bottom pan above shock absorber.

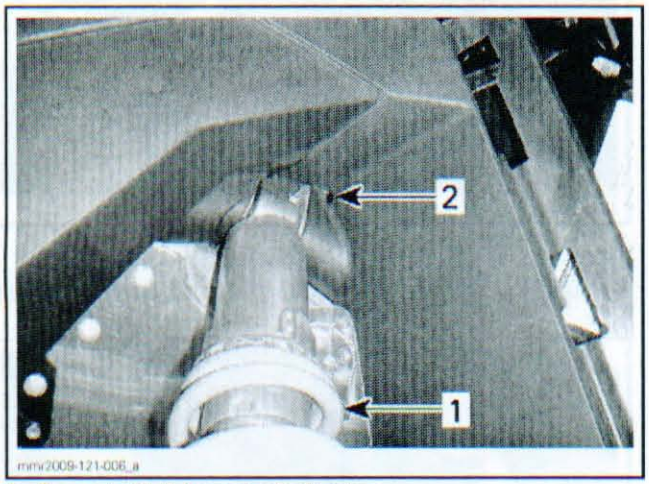

1. Top part of LH front shock absorber
2. Fuel tank vent outlet

2. While someone is removing the hose pincher, alternately touch and release vent hose outlet. You should feel pressurized air flowing out indicating the pressure relief valve function is working. Otherwise, replace valve.
3. Release any remaining pressure in the fuel tank by slowly unscrewing pressure test cap.
4. Remove the pressure test cap.
5. Disconnect the fuel tank vent line from its fitting.

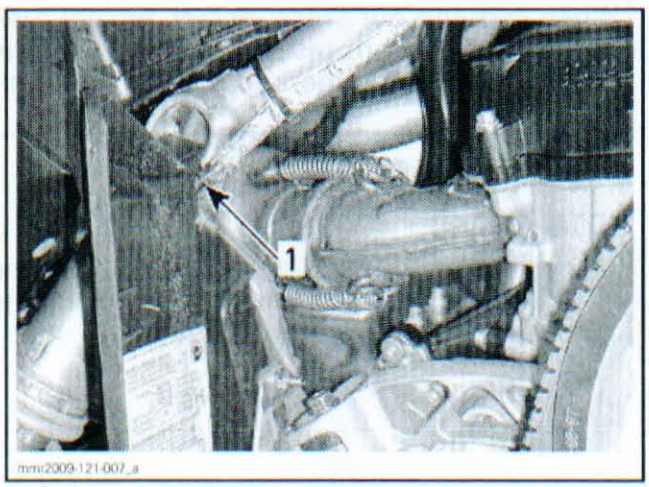

1. Fuel tank vent line end

6. Install the VACUUM PRESSURE PUMP (P/N 529 021 800) on the vent line end and apply air pressure through check valve. Air must flow freely towards the fuel tank neck.



1. Apply pressure through vent line end

If fuel vent check valve does not function as indicated in test, replace check valve.

7. Remove vacuum/pressure pump.
8. Secure vent line on its fitting.
9. Install the vehicle fuel tank cap.

NOTE: Ensure there is a heat shield on vent tube where shown and it is in good condition.

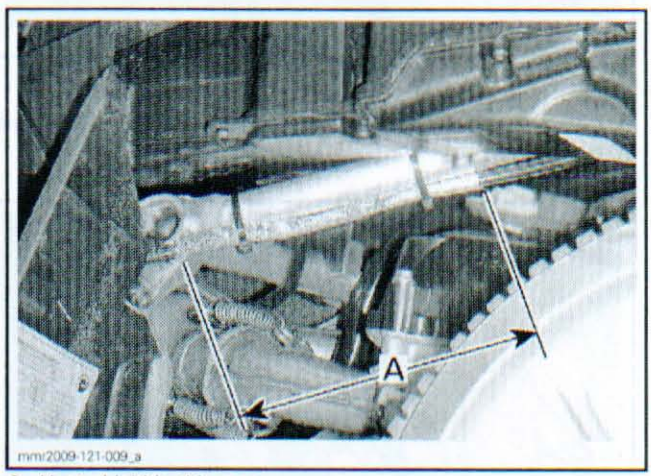

A. Heat shield in this area

NOTICE A damaged or missing heat shield could allow the tube to melt and if fuel leaks by the vent tube, it could create a fire if fuel comes in contact with hot parts.

www.midwestmanuals.com

FUEL PUMP PRESSURE TEST

The pressure test will show the available pressure at the fuel pump outlet. It validates the pressure regulator and the fuel pump.

1. Ensure there is enough gas in fuel tank.
2. Connect B.U.D.S. to the vehicle diagnostic connector. Refer to *COMMUNICATION TOOLS AND B.U.D.S. SOFTWARE* subsection.
3. Release the fuel pressure. Refer to *FUEL PUMP* in this subsection.
4. Move fuel tank rearward. Refer to *FUEL TANK* in this subsection.
5. Use the FUEL HOSE ADAPTER (P/N 529 036 023) and the PRESSURE GAUGE (P/N 529 035 709).

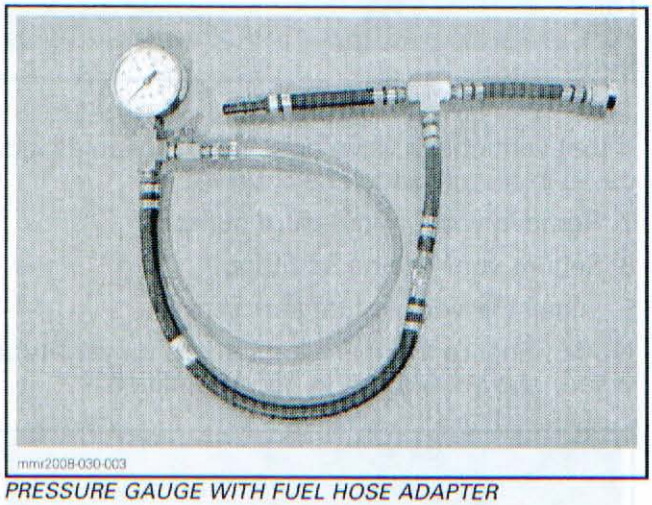

PRESSURE GAUGE WITH FUEL HOSE ADAPTER

6. Disconnect the quick connect fitting from fuel pump.

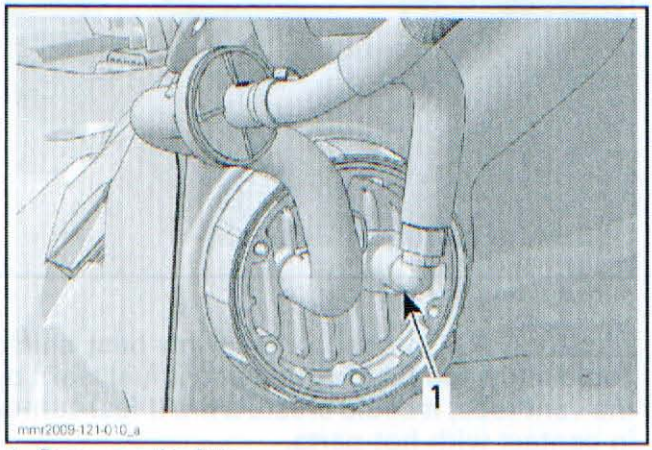

1. Disconnect this fitting

7. Install fuel hose adapter between the disconnected hose and the fuel pump fitting.

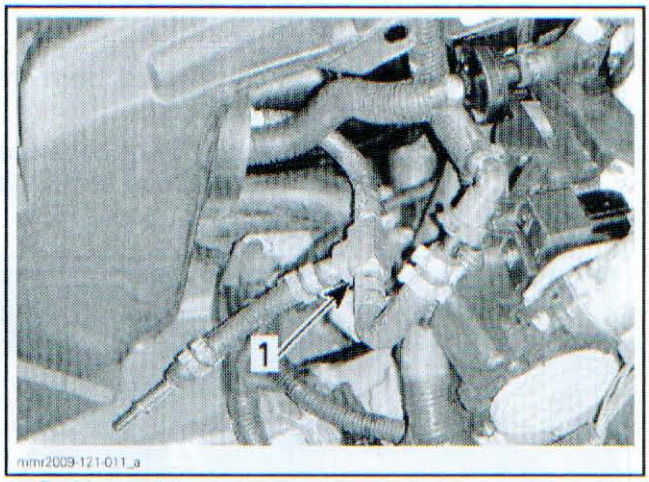

1. Fuel hose adapter

8. Install pressure gauge to the fuel hose adapter.

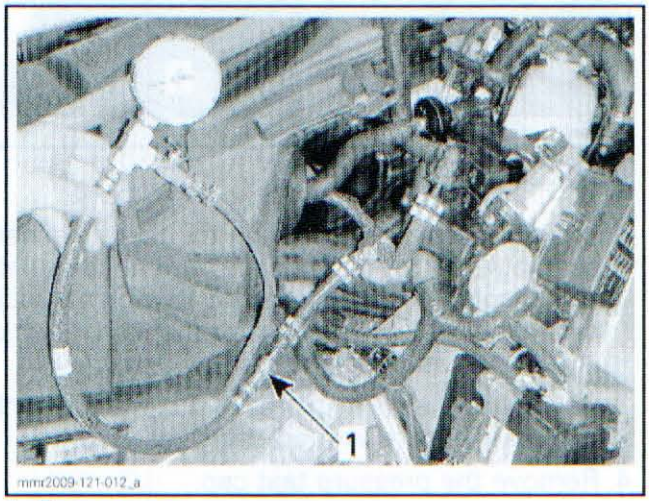

1. Pressure gauge

⚠ WARNING

When carrying out pressure test, ensure fuel is not leaking from test equipment. Ensure fuel hose do not come into contact with hot parts.

9. Set engine stop switch to RUN.

NOTE: Do NOT install the D.E.S.S. key.

10. Install the T-HARNESS (P/N 529 035 869) to the vehicle diagnostic connector. This will activate fuel pump. **Do not crank engine.**

www.midwestmanuals.com

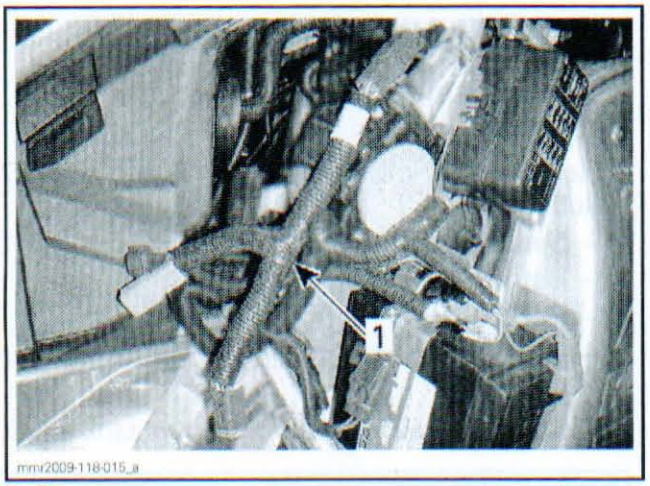

1. T-harness

11. Note pressure reading while pump is running.
    11.1 Disconnect T-harness.
    11.2 Release pressure from bleed valve of fuel pressure gauge so that gauge needle returns to zero (0).

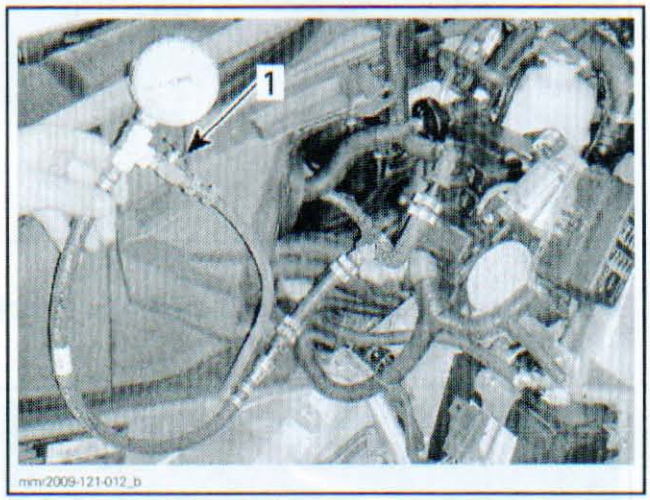

1. Pressure gauge bleed valve

    11.3 Reconnect T-harness.
    11.4 Note pressure reading again while pump is running.
12. Install D.E.S.S. key on its post.
13. **Start engine** and observe pressure reading. The fuel pressure should be the same as when engine was not running. Also, fuel pressure should remain stable.

FUEL PRESSURE
400 kPa (58 PSI)

14. Stop engine.

FUEL PRESSURE TEST	
RESULT	POSSIBLE CAUSE
Pressure above specifications	Defective fuel pressure regulator.
Pressure below specifications	Clogged fuel filter.
	Defective fuel pressure regulator.
	Leak in the fuel system circuit.
	Defective fuel pump.
	Leak of fuel injector(s).

15. If fuel pressure drops, check the following for leaks:
    - Hoses
    - Fuel injectors for leaks
    - Fuel pressure regulator
    - Fuel pump.
16. Bleed away any remaining fuel in the pressure gauge and fuel hose adapter using the bleed valve on the fuel hose adapter.



1. Pressure gauge bleed valve

17. Remove pressure gauge and fuel hose adapter.
18. Reconnect fuel hose to fuel pump.
19. Pressurize the fuel system to check for leaks. Refer to *FUEL SYSTEM PRESSURIZATION*.
20. Reinstall all remaining removed parts.

www.midwestmanuals.com

PROCEDURES

OETIKER CLAMPS

Clamp Replacement

To secure or cut Oetiker clamps on fuel lines, use OETIKER PLIERS (P/N 295 000 070).

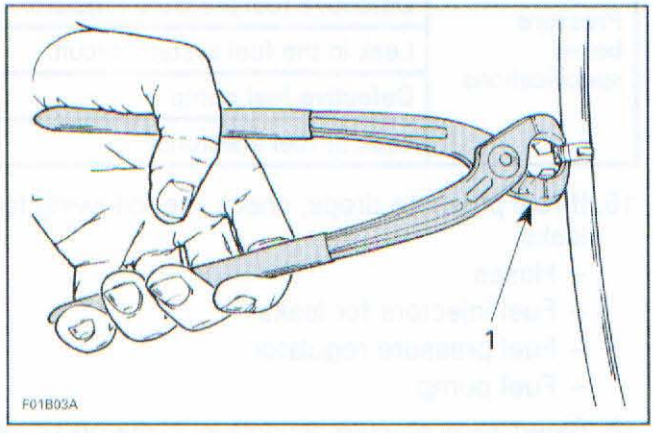

1. Cutting clamp

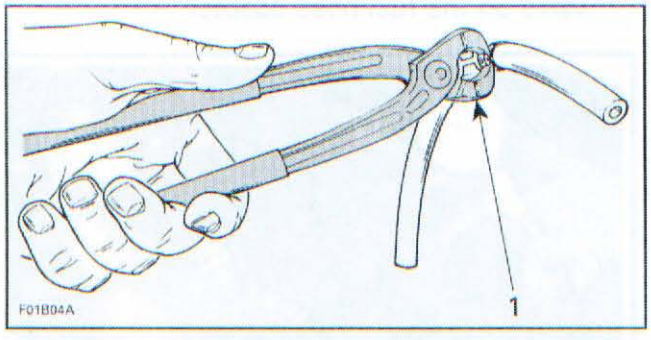

1. Securing clamp

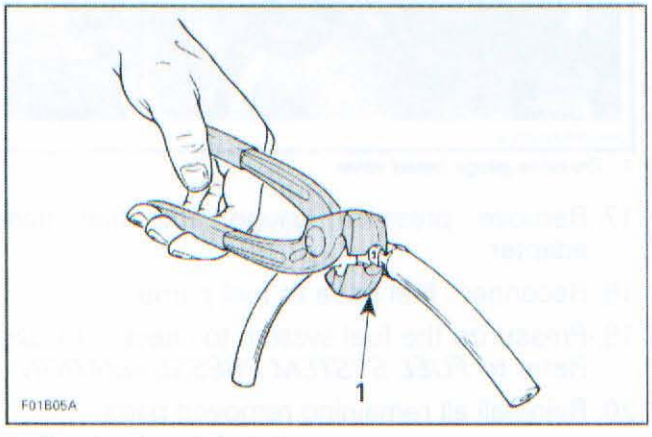

1. Securing clamp in limited access

⚠ WARNING

Use of improper fuel lines could compromise fuel system integrity.

FUEL TANK

Moving Fuel Tank Rearward for Servicing

1. Remove the following items. Refer to *BODY* subsection:
   - Seat(s)
   - Both side panels
   - Hood
   - Gauge support, console and windshield altogether.
2. Disconnect fuel vent line from fuel tank elbow.

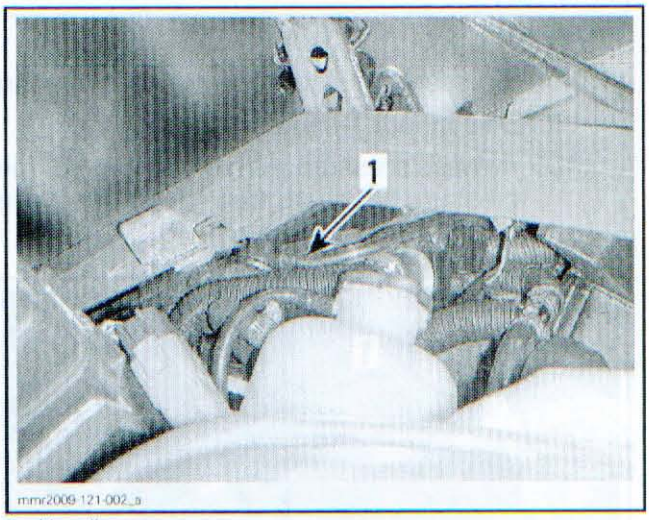

1. Vent line

3. Detach both rear frame members as per the following sequence.

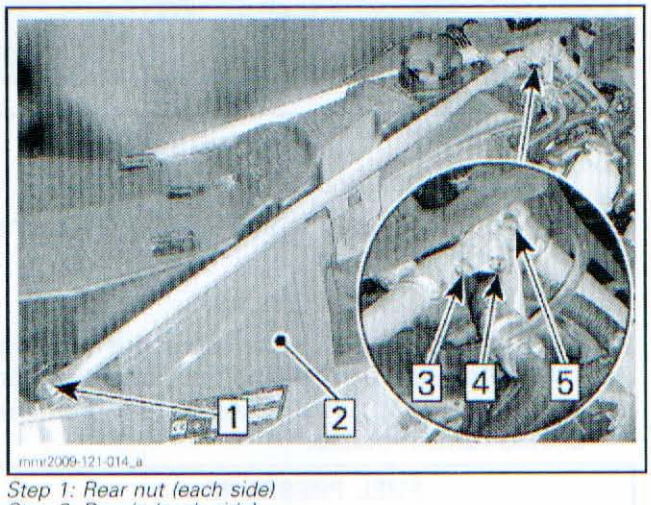

Step 1: Rear nut (each side)
Step 2: Panels (each side)
Step 3: Screw and nut
Step 4: Screw and nut of upper column support (each side)
Step 5: Loosen nut

4. Raise the ends of rear frame members and move fuel tank rearward as much as possible.

www.midwestmanuals.com

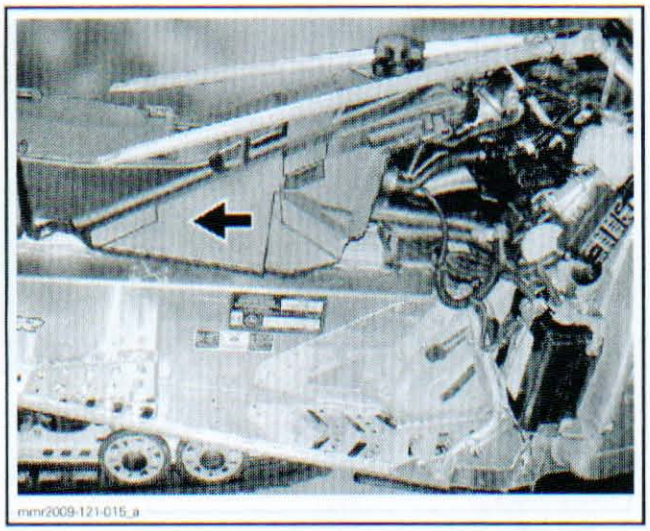

Fuel Tank Removal

Follows the steps described in *FUEL TANK* then continue with the following steps.

1. Release fuel pressure. Refer to *FUEL PUMP* in this subsection.
2. Disconnect ground cable from battery. Refer to *CHARGING SYSTEM.*
3. Disconnect fuel hose from fuel rail. Refer to *FUEL RAIL* in *ELECTRONIC FUEL INJECTION* subsection.
4. Disconnect return hose from coolant reservoir.

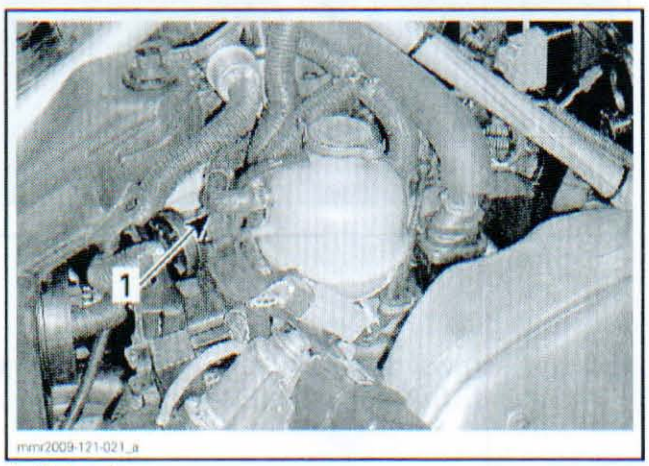

1. Return hose

5. Disconnect fuel pump connector.

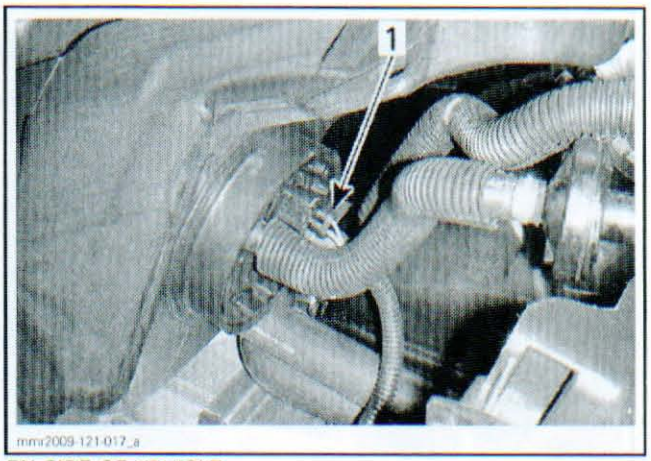

RH SIDE OF VEHICLE
1. Fuel pump connector

6. Disconnect fuel level sensor connector between fuel tank and intake manifold.

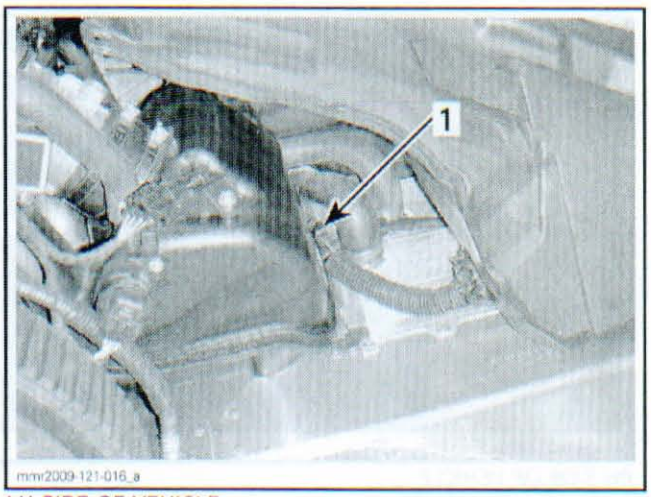

LH SIDE OF VEHICLE
1. Sensor connector

7. Pull out fuel tank.

Fuel Tank Installation

Installation procedures are the reverse of the removal procedures. However, pay attention to the following.

If Fuel Tank was Completely Removed

1. Position fuel tank on vehicle.
2. Reconnect fuel level sensor connector.

www.midwestmanuals.com

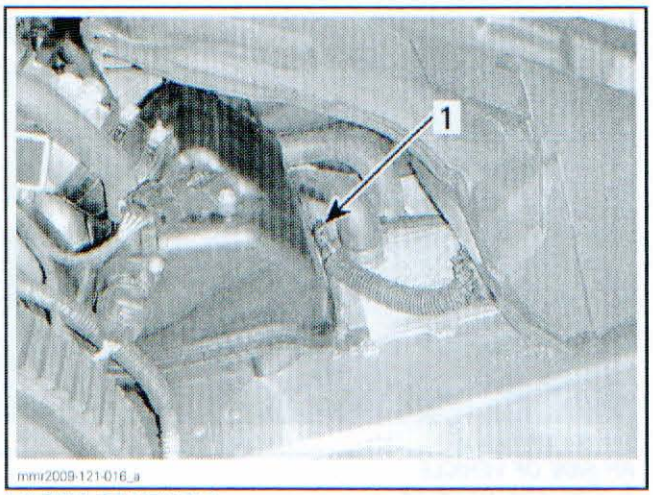

LH SIDE OF VEHICLE
1. Sensor connector

3. Reconnect fuel pump connector.

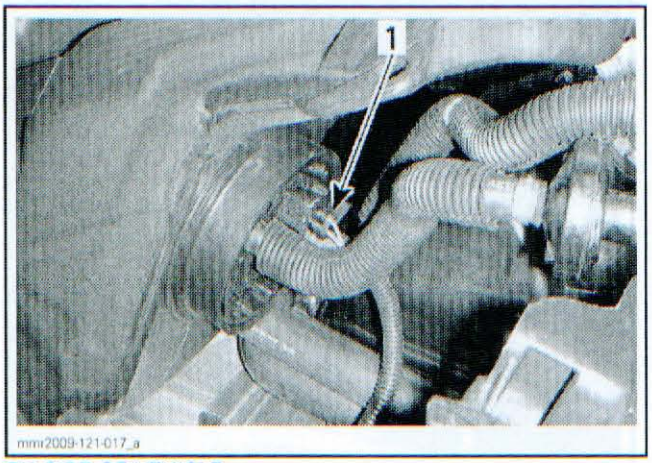

RH SIDE OF VEHICLE
1. Fuel pump connector

4. Continue the installation by following the instructions described in *IF FUEL TANK WAS MOVED REARWARD FOR SERVICING.*

If Fuel Tank was Moved Rearward for Servicing

1. Move tank forward in normal position.
2. Connect the fuel tank vent line at the fuel tank elbow.

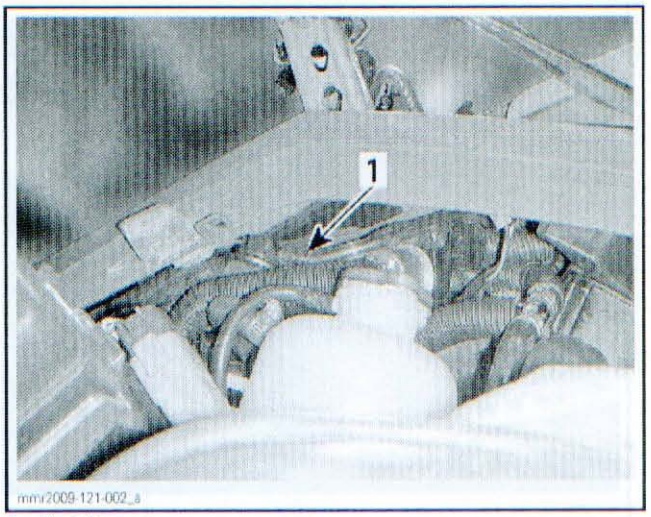

1. Vent line

NOTICE Ensure vent tube is not kinked or pinched.

3. Install shoulder bushings and **NEW** nuts on the rear end or rear frame members.

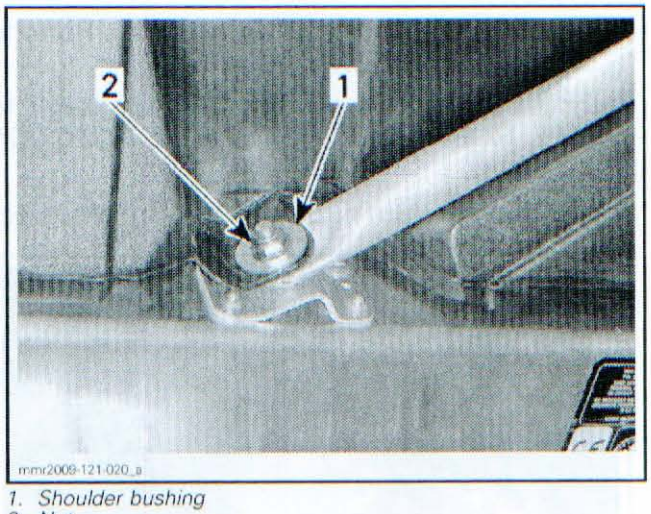

1. Shoulder bushing
2. Nut

4. Torque nuts to 34 N•m (25 lbf•ft).
5. Insert screws on the front end of rear frame members. Secure with **NEW** nuts.

www.midwestmanuals.com

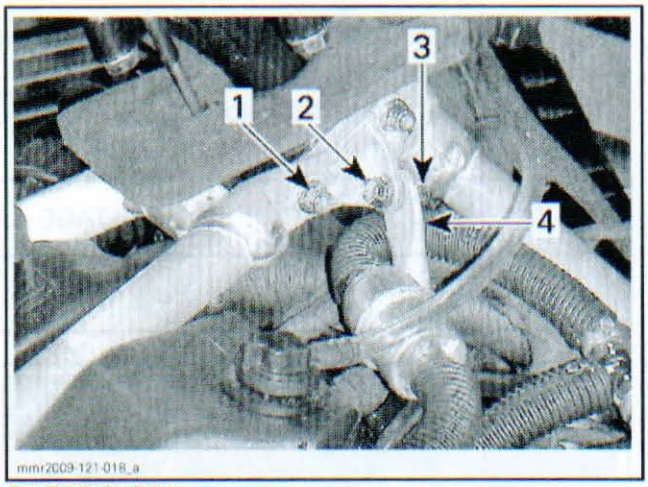

RH SIDE SHOWN
1. *Screw with new nut*
2. *Screws*
3. *New nuts*
4. *Place upper column supports as shown*

6. Torque all nuts.

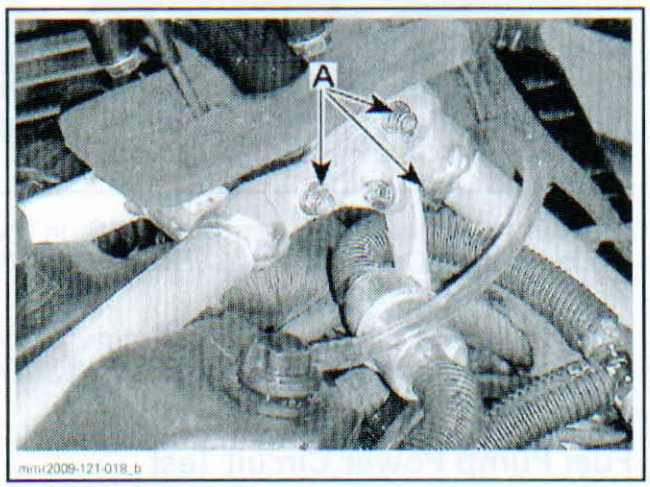

RH SIDE SHOWN
A. 18 N•m (159 lbf•in)

7. Reconnect fuel hose to fuel rail. Refer to *FUEL RAIL* in *ELECTRONIC FUEL INJECTION* subsection.
8. Install remaining parts.
9. At console installation, torque the fuel tank filler neck nut to 11 N•m (97 lbf•**in**).
10. Pressurize the fuel system to check for leaks. Refer to *FUEL SYSTEM PRESSURIZATION*.
11. Carry out a fuel tank leak test. Refer to *FUEL TANK LEAK TEST* in this subsection.
12. Refuel tank.

ELECTRIC FUEL PUMP

Releasing Fuel Pump Pressure

1. Connect B.U.D.S. to the vehicle diagnostic connector. Refer to *COMMUNICATION TOOLS AND B.U.D.S. SOFTWARE* subsection.
2. Release the fuel pressure by selecting the following in B.U.D.S.:
   - 2.1 **Read Data**
   - 2.2 **Activation** tab
   - 2.3 **ECM** tab in the lower LH corner of the **Activation** page
   - 2.4 **Fuel Press. Relief** button in the **Activate** area.

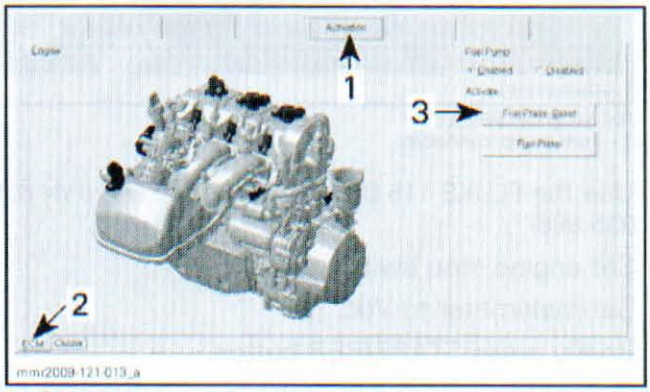

1. *Activation tab*
2. *ECM tab*
3. *Fuel Press. Relief button*

Release fuel pressure by running engine until it runs out of gas.

Fuel Pump Operation Test

Set engine stop switch to RUN.

NOTE: Do not install D.E.S.S. key to its post to prevent engine starting.

Briefly press START/RER button.

You should hear the fuel pump running for approximately 2 seconds.

If pump runs, carry out the *FUEL PUMP PRESSURE TEST* in this subsection.

If the pump does not run:
- Ensure ECM is powered. Refer to *ELECTRONIC FUEL INJECTION* subsection.
- Check fuse F2. If fuse is faulty, replace it and repeat test. If fuse is good, carry out the *FUEL PUMP INPUT VOLTAGE TEST* in this subsection.

www.midwestmanuals.com

Fuel Pump Input Voltage Test

Move fuel tank rearward to reach fuel pump connector. Refer to *FUEL TANK* in this subsection.

Disconnect fuel pump connector.

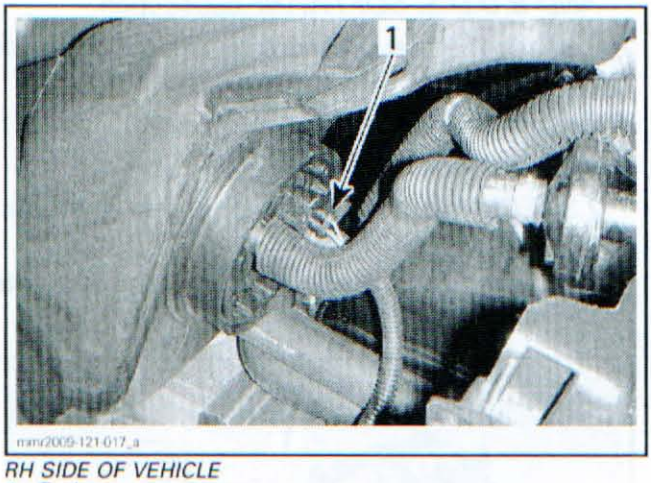

RH SIDE OF VEHICLE
1. Fuel pump connector

Use the FLUKE 115 DIGITAL MULTIMETER (P/N 529 035 868).

Set engine stop switch to RUN.

Set multimeter to Vdc.

Briefly press START/RER button.

Probe terminals and read the input voltage as follows.

FUEL PUMP HARNESS CONNECTOR		VOLTAGE
Pin 2 (+ probe)	Pin 1 (- probe)	Battery voltage for approximately 2 seconds, then voltage should drop by approximately 0.5 V

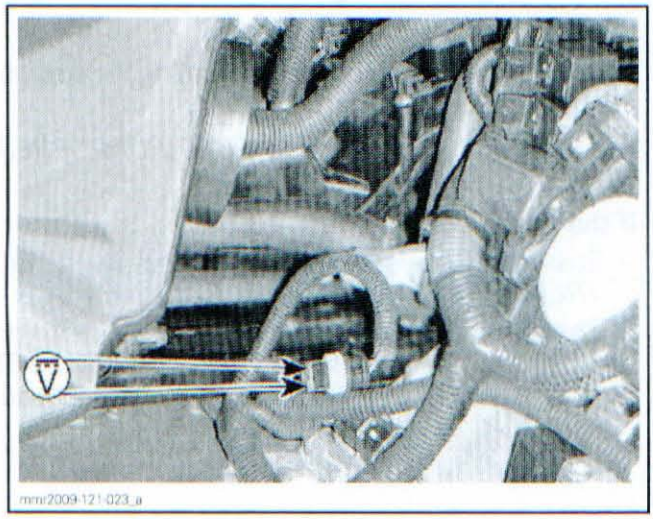

If test succeeded, power and ground circuits are good. Replace fuel pump.

If test failed, carry out the following test.

Briefly press START/RER button.

FUEL PUMP HARNESS CONNECTOR		VOLTAGE
Pin 2 (+ probe)	Battery ground (- probe)	Battery voltage

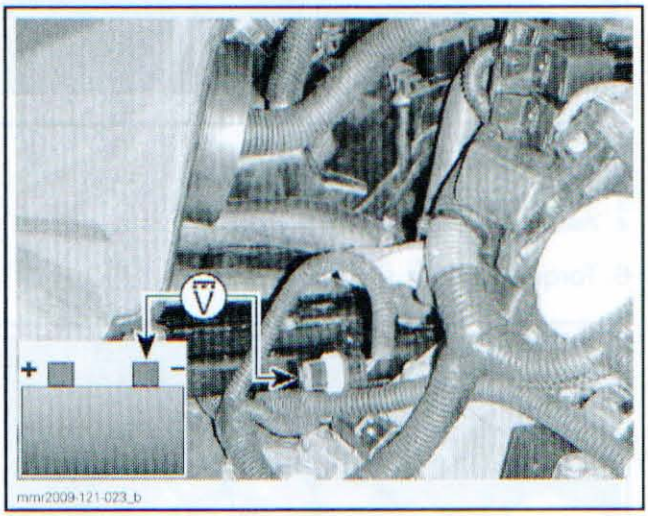

If battery voltage is read, the problem is in the ground circuit. Carry out the *GROUND CIRCUIT TEST*.

If battery voltage is not read, the problem is in the power circuit. Carry out the *FUEL PUMP POWER CIRCUIT TEST*.

Fuel Pump Power Circuit Test

Remove relay 1 from fuse box.

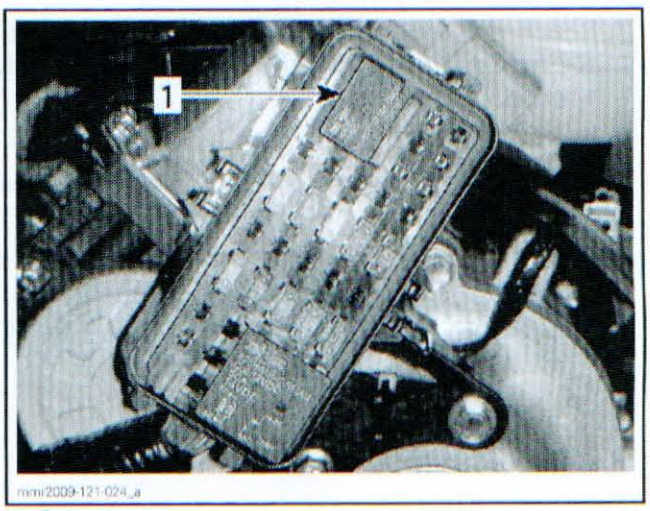

1. Relay 1

Use the multimeter and select Ω.

www.midwestmanuals.com

Check continuity of power circuit as follows.

FUSE BOX	FUEL PUMP CONNECTOR	RESISTANCE @ 20°C (68°F)
Pin 12E	Pin 2	Close to 0 Ω



mmr2009-121-023_d

If test succeeded, power circuit is good.

If test failed, check wiring harness and connections between fuse box and fuel pump connector. See *WIRING DIAGRAM*.

Reinstall relay 1.

Fuel Pump Ground Circuit Test

Disconnect the B connector from ECM. Refer to *ELECTRONIC FUEL INJECTION*.

Install the ECM ADAPTER TOOL (2 CONNECTORS) (P/N 420 277 010) on ECM connector.

Use the multimeter and select Ω.

Check continuity of ground circuit as follows.

ECM CONNECTOR	FUSE PUMP CONNECTOR	RESISTANCE @ 20°C (68°F)
Pin B29	Pin 1	Close to 0 Ω

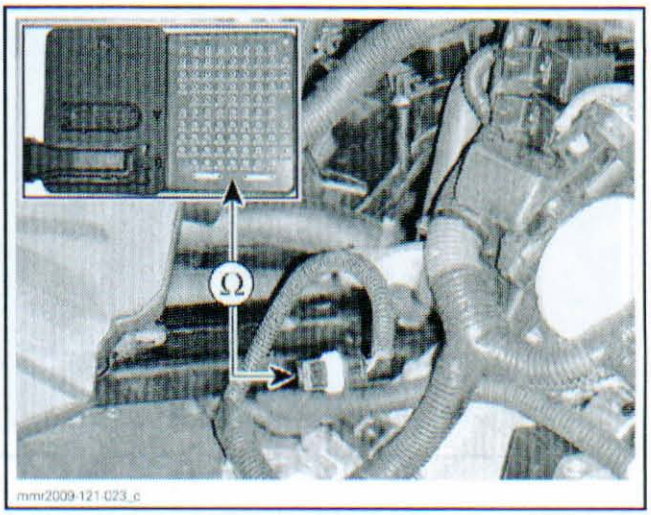

mmr2009-121-023_c

If test failed, check wiring harness and connections between ECM connector and fuel pump connector.

If test succeeded, ground circuit is good. If all other tests are good, check the ECM. Refer to *ELECTRONIC FUEL INJECTION*.

Reinstall ECM and fuel pump connectors.

Fuel Pump Removal

1. Release the fuel pressure. Refer to *FUEL PUMP*
2. Disconnect ground cable from battery. Refer to *CHARGING SYSTEM*.
3. Remove fuel tank. Refer to *FUEL TANK REMOVAL* in this subsection.
4. Empty fuel tank.
5. Using the FUEL PUMP NUT TOOL (P/N 529 036 118), remove fuel pump nut.

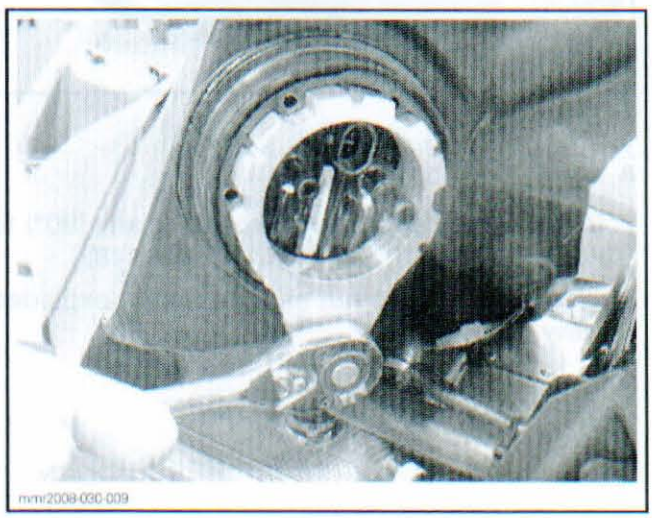
mmr2008-030-009

6. Remove fuel pump.

www.midwestmanuals.com

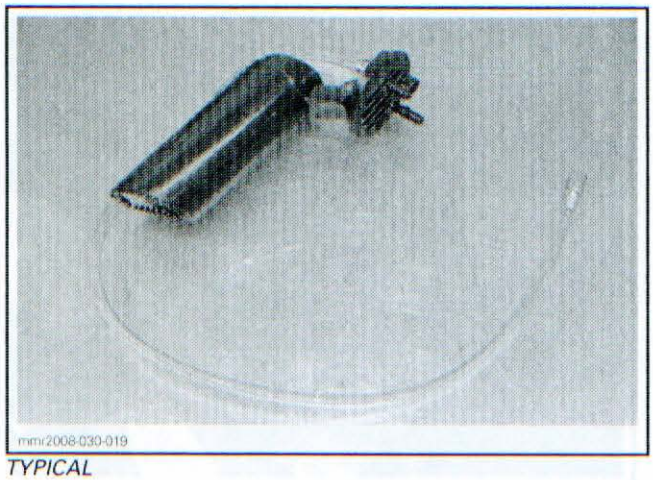

TYPICAL

7. Remove and discard fuel pump gasket.

Fuel Pump Installation

For installation, reverse the removal procedure. However, pay attention to the following.

1. Install a **NEW** gasket on the fuel pump.

NOTE: Locate gasket between the pump and the fuel tank.

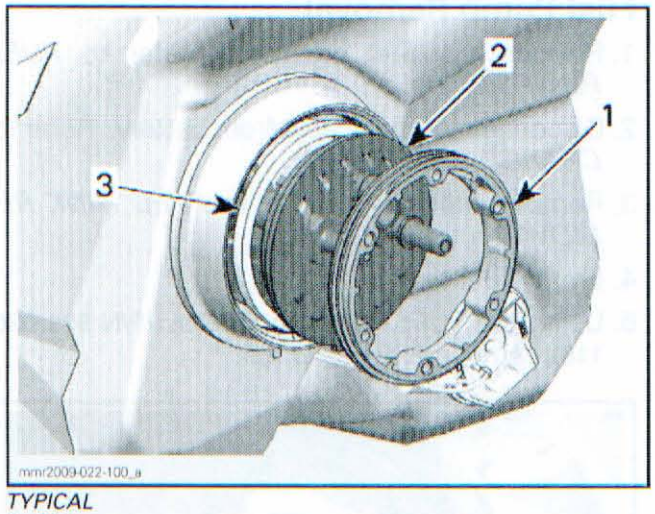

TYPICAL
1. *Nut*
2. *Fuel pump*
3. *Gasket*

2. Install a torque wrench perpendicularly (90°) to FUEL PUMP NUT TOOL (P/N 529 036 118).
3. Torque fuel pump nut as specified in exploded view.

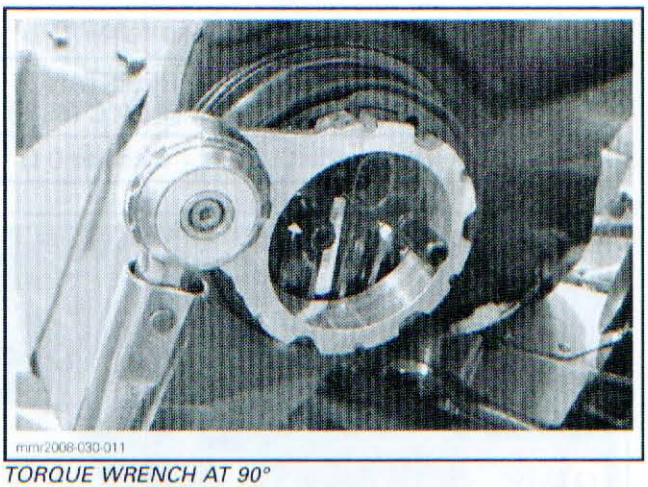

TORQUE WRENCH AT 90°

4. Reinstall fuel tank. Refer to the *FUEL TANK INSTALLATION* in this subsection.

FUEL PRESSURE REGULATOR

The fuel pressure regulator is an in-line type and is acquired as an assembly with the fuel filter.

Fuel Pressure Regulator Removal

1. Release the fuel pressure. Refer to *FUEL PUMP*
2. Disconnect ground cable from battery. Refer to *CHARGING SYSTEM.*
3. Move fuel tank rearward as described in *FUEL TANK.*
4. Disconnect fuel hose from fuel rail. Refer to *FUEL RAIL* in *ELECTRONIC FUEL INJECTION* subsection.
5. Disconnect the quick connect fitting from fuel pump.

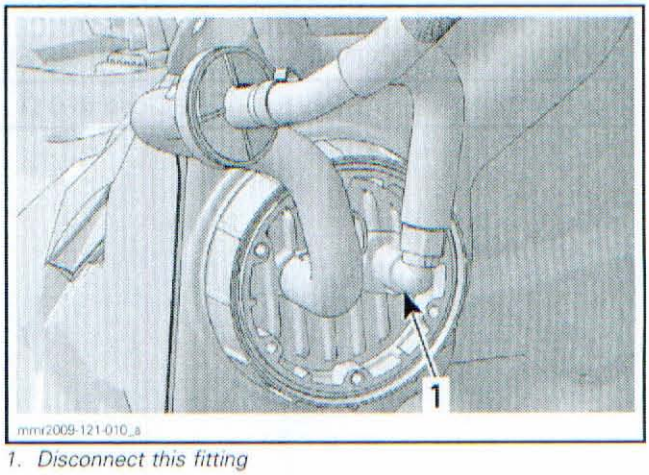

1. *Disconnect this fitting*

6. Remove the Oetiker clamp from pressure regulator hose.

www.midwestmanuals.com

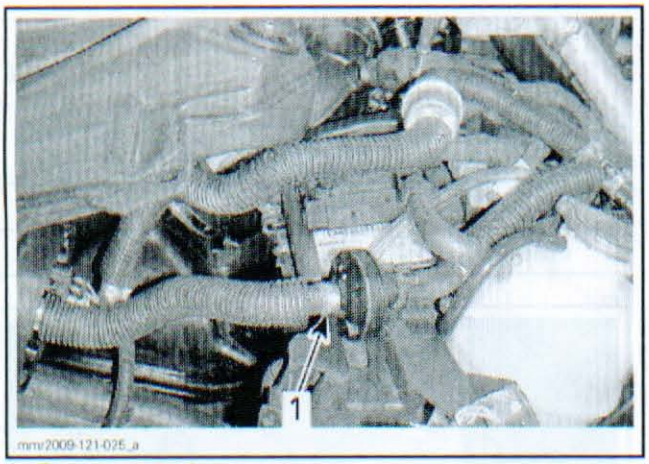

1. Remove clamp from regulator

7. Remove fuel pressure regulator hose assembly from vehicle.

Fuel Pressure Regulator Installation

For installation, reverse the removal procedures. However, pay attention to the following.

1. Reconnect fuel hose to fuel rail. Refer to *FUEL RAIL* in *ELECTRONIC FUEL INJECTION* subsection.
2. Reconnect fuel hose to fuel pump.
3. Install a NEW Oetiker clamp to retain fuel hose to pressure regulator.

NOTICE **Ensure hose clamp is tight and hose cannot turn on the fitting.**

4. Secure fuel filter in its holder and make sure that holder is attached to the upper column support.

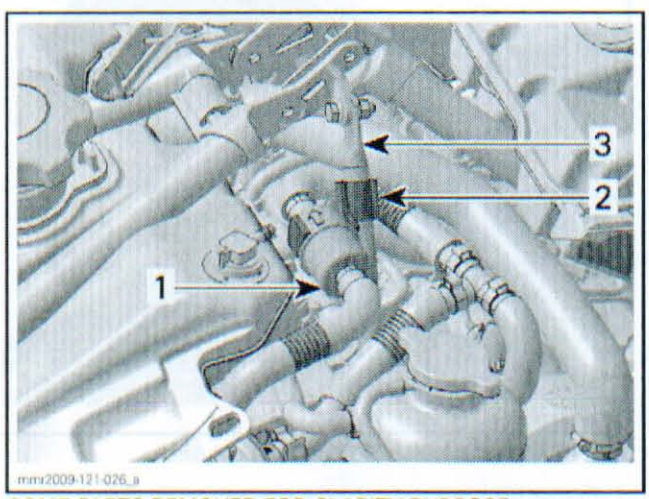

SOME PARTS REMOVED FOR CLARITY PURPOSE
1. Fuel filter
2. Filter holder
3. Upper column support

⚠ CAUTION **Ensure fuel filter is always secured as described to allow proper conductivity of static electricity.**

5. Pressurize the fuel system to check for leaks. Refer to *FUEL SYSTEM PRESSURIZATION*.

IN-LINE FUEL FILTER

The in-line fuel filter is part of the fuel pressure regulator assembly. For replacement, refer to *FUEL PRESSURE REGULATOR* in this subsection.

FUEL LEVEL SENSOR

Sensor Fuse

The fuel level sensor circuit is protected by an in-line 0.25 A. Fuse is located ahead of LH side of fuel tank near the sensor.

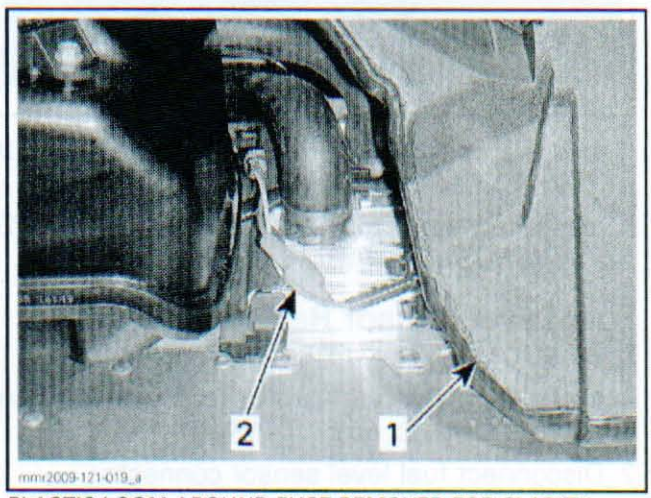

PLASTIC LOOM AROUND FUSE REMOVED FOR CLARITY
1. Front of fuel tank
2. Fuse

To access the fuel level sensor fuse, move fuel tank rearward. Refer to *FUEL TANK*.

Fuel Level Sensor Resistance Test (in Circuit)

1. Disconnect the multifunction gauge connector. Refer to *LIGHTS, GAUGE AND ACCESSORIES*.
2. Use the FLUKE 115 DIGITAL MULTIMETER (P/N 529 035 868).
3. Set multimeter to Ω.
4. Probe terminals and read the sensor resistance as follows.

www.midwestmanuals.com

FLOAT POSITION (ACCORDING TO FUEL LEVEL)	MULTIFUNCTION GAUGE HARNESS CONNECTOR		RESISTANCE @ 20°C (68°F)
Full	Pin 12	Pin 15	7 Ω ± 3 Ω
Empty			95 Ω ± 5 Ω

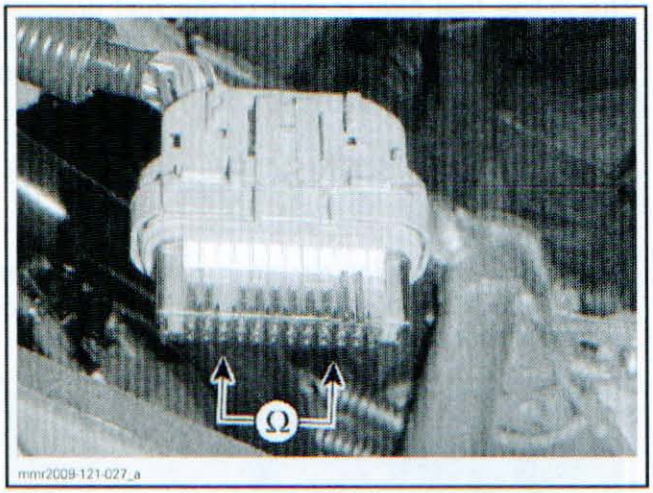

If test succeeded, refer to *FUEL LEVEL SENSOR INPUT VOLTAGE TEST.*

If test failed, refer to *FUEL LEVEL SENSOR RESISTANCE TEST (SENSOR ONLY).*

Fuel Level Sensor Resistance Test (Sensor Only)

1. Move fuel tank rearward to reach sensor connector. Refer to *FUEL TANK.*
2. Disconnect fuel level sensor connector.

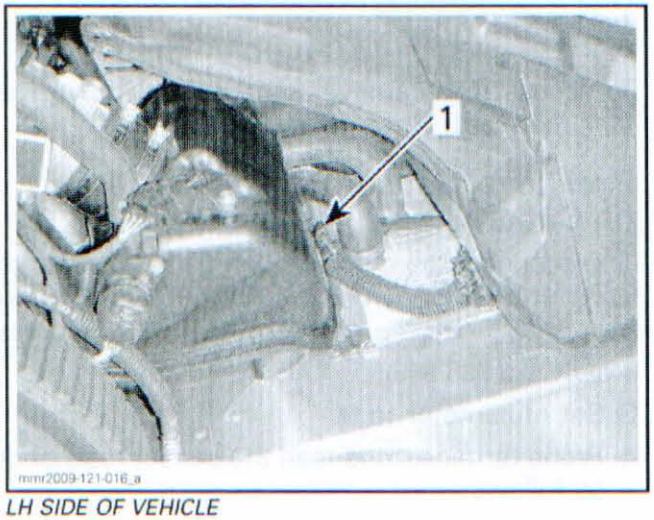

LH SIDE OF VEHICLE
1. Sensor connector

3. Probe sensor terminals and read the resistance as follows.

FLOAT POSITION (ACCORDING TO FUEL LEVEL)	SENSOR CONNECTOR		RESISTANCE @ 20°C (68°F)
Full	Pin 1	Pin 2	7 Ω ± 3 Ω
Empty			95 Ω ± 5 Ω

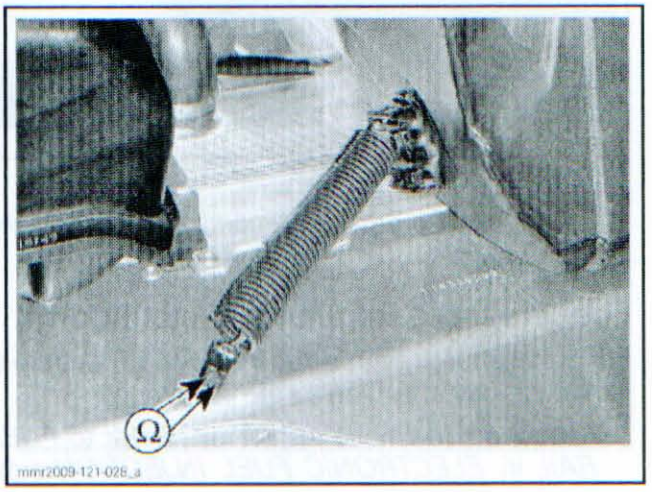

4. If test failed, replace sensor.
5. If test succeeded, check wiring continuity between multifunction gauge and sensor. See *WIRING DIAGRAM.*

Fuel Level Sensor Input Voltage Test

1. Make sure main wiring harness connector is plugged on multifunction gauge.

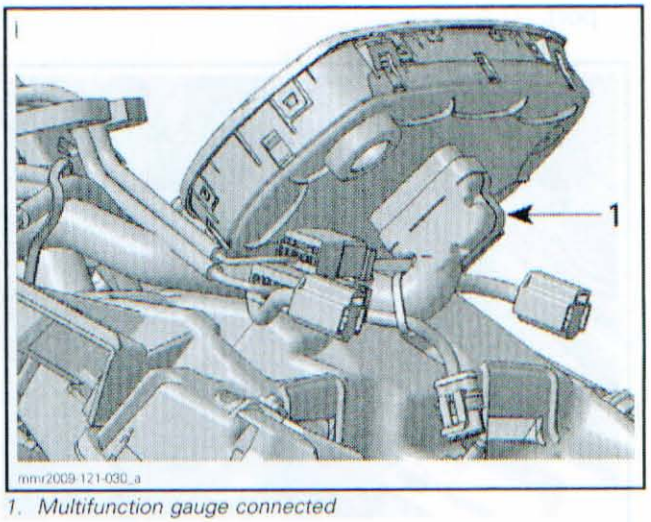

1. Multifunction gauge connected

2. Disconnect fuel level sensor.

www.midwestmanuals.com

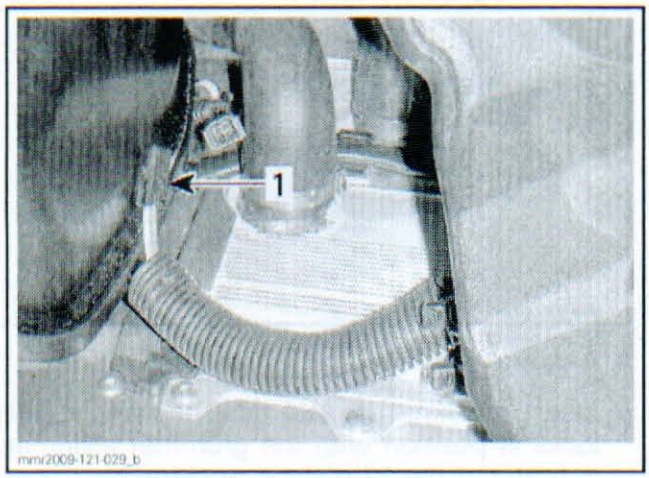

1. Sensor disconnected

3. Use the FLUKE 115 DIGITAL MULTIMETER (P/N 529 035 868).
4. Select Vdc.
5. Set engine stop switch to RUN.

NOTE: Do NOT install the D.E.S.S. key.

6. Briefly press START/RER button to wake up multifunction gauge.
7. Probe terminals of main wiring harness connector and read the voltage as follows.

SENSOR MAIN WIRING HARNESS CONNECTOR		VOLTAGE
Pin 1	Pin 2	5 Vdc

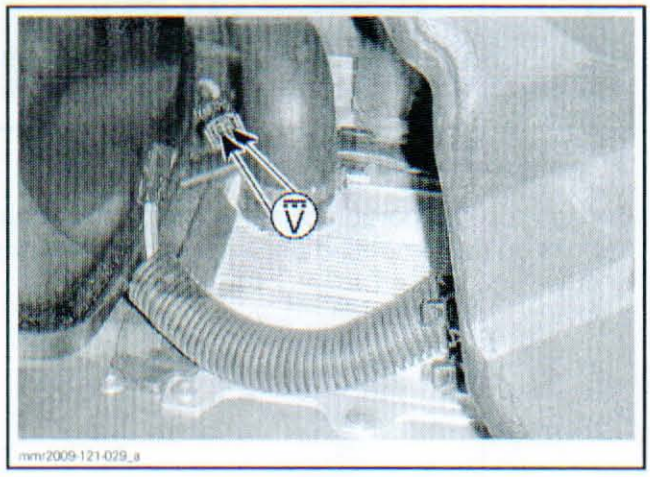

If test failed, replace multifunction gauge.

If test succeeded, multifunction gauge provides proper voltage to the sensor.

Fuel Level Sensor Removal

1. Drain fuel tank.
2. Move fuel tank rearward. Refer to *FUEL TANK* in this subsection.
3. Disconnect fuel level sensor connector.

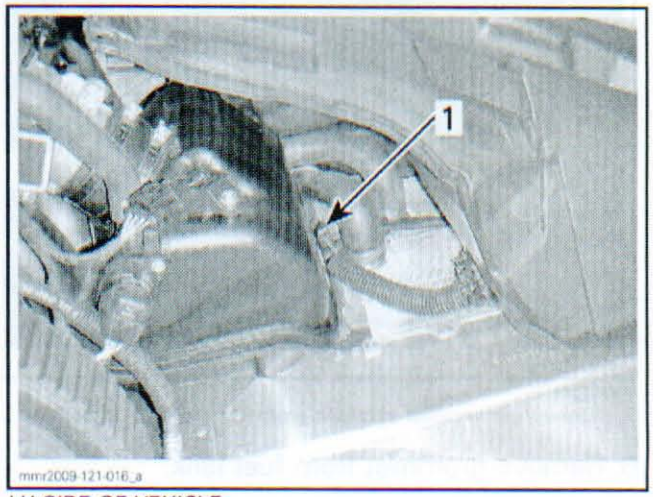

LH SIDE OF VEHICLE
1. Sensor connector

4. Cut locking ties securing grommet.

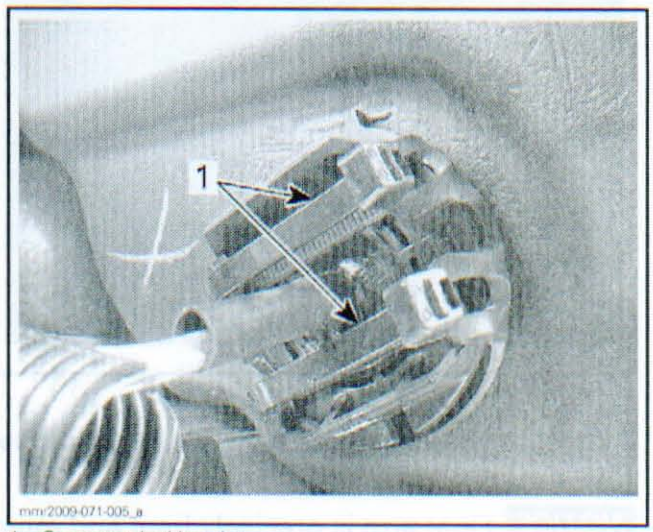

1. Grommet locking ties

5. Insert a screwdriver between grommet and sensor face plate. Gently pry sensor loose in grommet.

NOTE: Do not try to remove sensor from grommet at this time.

www.midwestmanuals.com

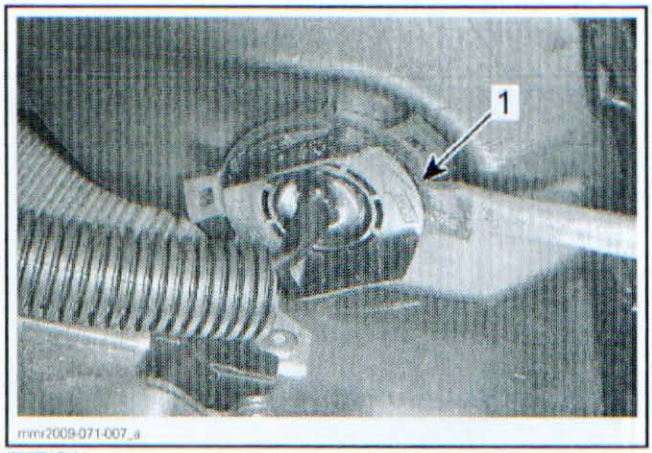

TYPICAL
1. *Screwdriver inserted between grommet and face of sensor*

6. Remove grommet from fuel tank.

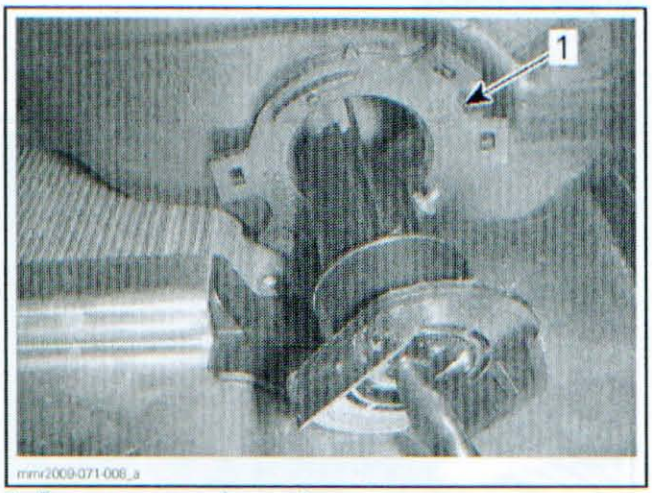

1. *Remove grommet from tank*

7. Carefully rotate sensor as you pull it out of fuel tank.

NOTICE **Float arm is precisely bent and must not be altered on removal or installation.**

Fuel Level Sensor Installation

1. Fuel level sensor installation is the reverse of removal procedure. However, pay attention to the following.
2. Carry out a resistance test of sensor before installation. Refer to *FUEL LEVEL SENSOR RESISTANCE TEST* in this subsection.
3. To ease grommet and fuel level sensor installation, spray water (**NO SOAP**) on outer beveled surface and inner surface of grommet.

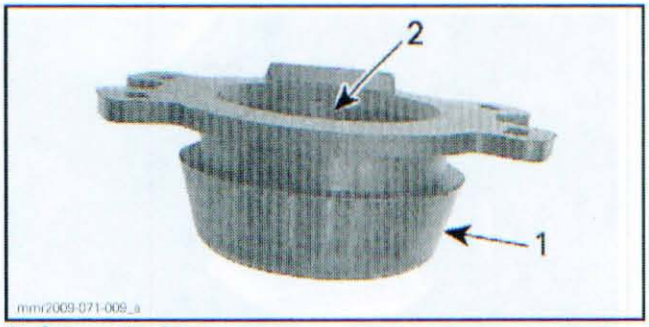

1. *Spray water here*
2. *Spray water on inner diameter*

4. Insert grommet in fuel tank ensuring it fully locks in position with the grommet alignment indicator at the **12 o'clock position**.
5. Carefully insert float sensor through hole in grommet gently rotating it in position.

NOTE: Ensure the flat side of sensor is pointing in a general upwards direction.

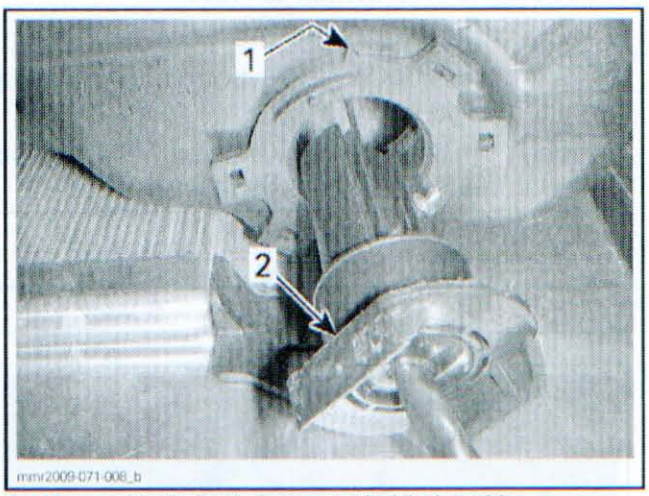

1. *Alignment indicator facing up at 12 o'clock position*
2. *Flat side of sensor upwards position*

6. Align top flat portion of sensor with alignment boss on grommet and push it in until it bottoms out.

www.midwestmanuals.com

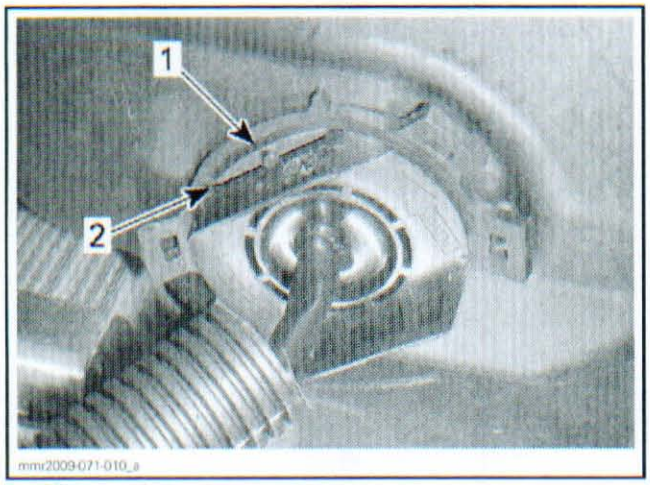

1. *Alignment boss on grommet*
2. *Flat side of sensor aligned to grommet*

7. Install locking ties to secure grommet on fuel level sensor. Do not overtighten locking ties, just tighten without stretching them.

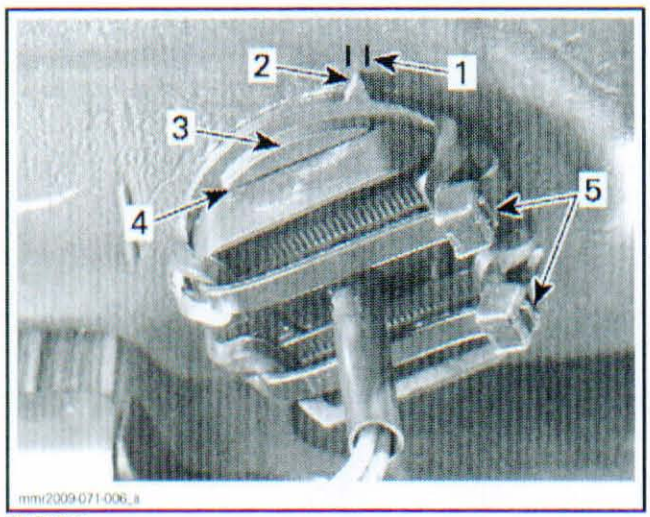

TYPICAL
1. *Disregard alignment index marks on fuel tank*
2. *Grommet alignment indicator must be at 12 o'clock*
3. *Sensor alignment boss on grommet*
4. *Sensor aligned to grommet boss*
5. *Locking ties secured*

8. Apply DIELECTRIC GREASE (P/N 293 550 004) in connector to prevent corrosion.
9. Carry out a fuel system leak test. Refer to *FUEL TANK LEAK TEST* in this subsection.
10. Test fuel level indication as you fill fuel tank before you complete reassembly of vehicle.

www.midwestmanuals.com

www.midwestmanuals.com

IGNITION SYSTEM

SERVICE TOOLS

Description	Part Number	Page
ECM ADAPTER TOOL (2 CONNECTORS)	420 277 010	238
FLUKE 115 DIGITAL MULTIMETER	529 035 868	236

GENERAL

Cables and locking ties removed during a procedure must be reinstalled as per factory standards.

NOTICE **Never force a multimeter probe into an electrical terminal.**

SYSTEM DESCRIPTION

The ignition system is a digital inductive type (IDI) system.

Ignition system parameters such as ignition timing, spark duration, and firing order, are controlled by the ECM in order to meet engine operational requirements.

Three separate ignition coils (stick coils) receive power from three separate fuses.

When a ground signal is provided by the ECM to an ignition coil primary winding, a high voltage is induced in the coil secondary winding that is used to produce a spark at the spark plug electrode.

Cylinder 1 is on the PTO side of engine.

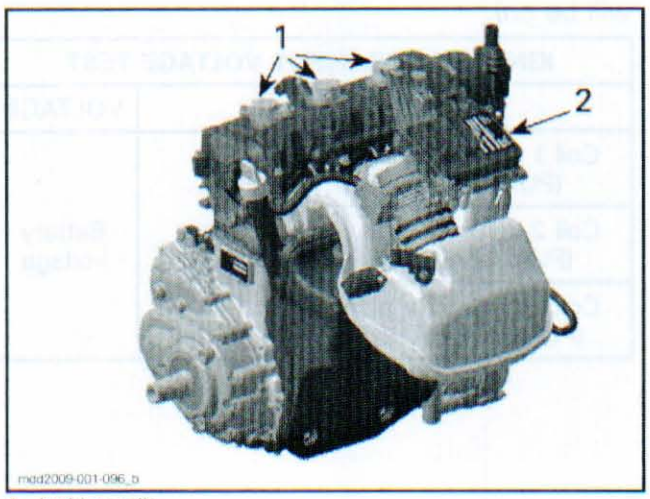

1. *Ignition coils*
2. *ECM*

Ignition Timing

Ignition timing is not adjustable.

The ECM is programmed with data (ignition mappings), used along with data received from a variety of sensors to establish optimum ignition timing under all engine operating conditions.

The firing of each spark plug is independent of the others.

TROUBLESHOOTING

IGNITION SYSTEM TESTING

The ECM controls the ignition system.

If a fault is detected by the ECM, the check engine light will turn on.

On a premium gauge, a check engine message will be displayed and beep code will be emitted. Refer to *ENGINE MANAGEMENT SYSTEM* section for details.

The ECM can detect a problem on the primary winding or circuit of the ignition coils.

The secondary winding of the ignition coils is not monitored by the ECM.

Other sensors in relation with the ignition system are also monitored by the ECM.

Ignition System Testing Sequence

Check for fault codes using B.U.D.S. software as a first troubleshooting step. Refer to *ENGINE MANAGEMENT SYSTEM* section.

Check the following fuses:

- Fuse 3
- Fuse 4
- Fuse 5.

If a fuse is burnt, test for a short circuit or faulty component on that fuse circuit before replacing the fuse.

www.midwestmanuals.com

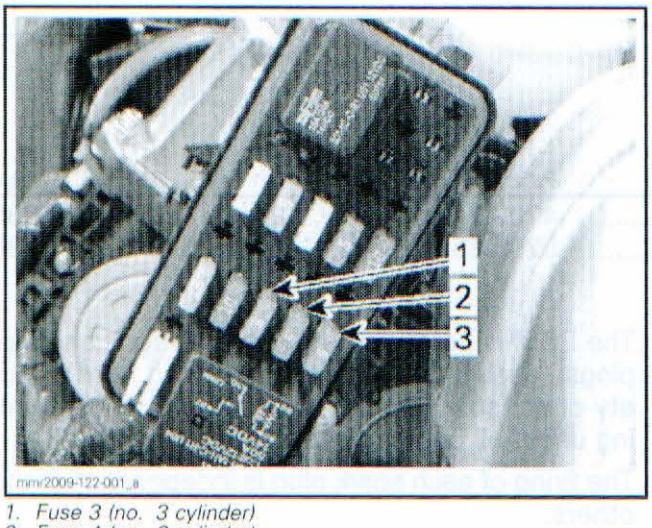

1. *Fuse 3 (no. 3 cylinder)*
2. *Fuse 4 (no. 2 cylinder)*
3. *Fuse 5 (no. 1 cylinder)*

Check ignition spark, refer to *IGNITION COIL QUICK TEST USING B.U.D.S.* in this subsection.

PROCEDURES

IGNITION COILS

Ignition Coil Quick Test using B.U.D.S.

This test confirms the working condition of the ignition circuit and coil for the cylinder tested.

1. Remove coil, refer to *IGNITION COIL REMOVAL* in this subsection.
2. Install a spark tester on the ignition coil.
3. Connect to the latest applicable B.U.D.S. software, refer to *COMMUNICATION TOOLS/ B.U.D.S. SOFTWARE* subsection.
4. In B.U.D.S., select **Read Data**.
5. Select the **Activation** tab.
6. Energize the **ignition** coil by selecting it on the engine illustration.

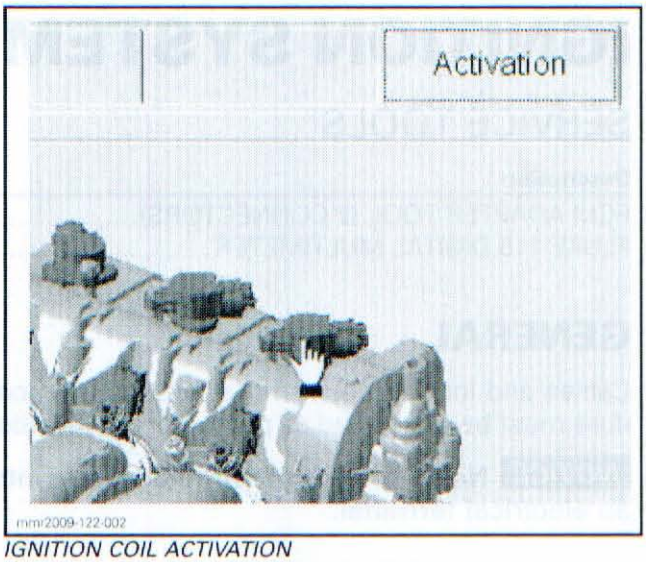

IGNITION COIL ACTIVATION

If there is no spark, carry out the following tests.

Ignition Coil Input Voltage Test

1. Remove air intake silencer, refer to *AIR INTAKE SYSTEM* subsection.
2. Disconnect the ignition coil connector.
3. Install D.E.S.S. key on post and set engine stop switch to ON.
4. Quickly press on START/RER switch to wake up ECM.

Using a FLUKE 115 DIGITAL MULTIMETER (P/N 529 035 868) set to Vdc, measure voltage as per following table.

NOTE: Test is valid only if ECM is active (gauge will be on).

IGNITION COIL INPUT VOLTAGE TEST		
TEST PROBES		VOLTAGE
Coil 1 connector pin 1 (PURPLE/BLUE)	Battery ground	Battery voltage
Coil 2 connector pin 1 (PURPLE/GREEN)		
Coil 3 connector pin 1 (PURPLE/ORANGE)		

www.midwestmanuals.com

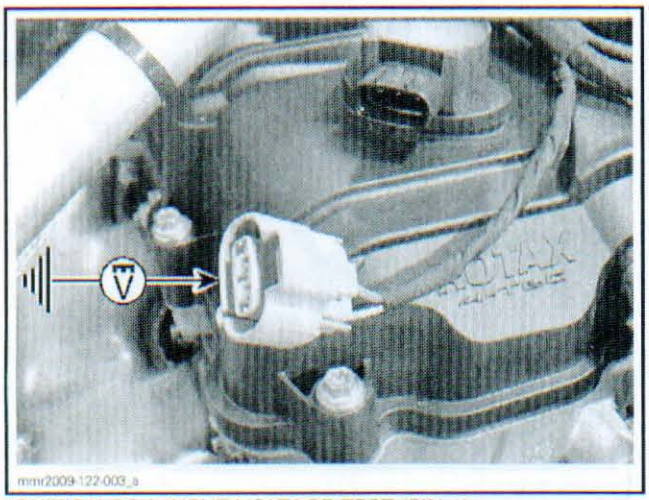

mmr2009-122-003_a

IGNITION COIL INPUT VOLTAGE TEST (PIN 1)

If battery voltage is read, test coil ground signal. Refer to *IGNITION COIL CIRCUIT CONTINUITY TEST.*

If battery voltage is NOT read, test ignition coil power input wire. Refer to *IGNITION COIL CIRCUIT CONTINUITY TEST.*

5. Remove D.E.S.S. post.

Ignition Coil Circuit Continuity Test

Power Input Wire (Coil)

1. Make sure that D.E.S.S. key is removed from post and engine stop switch is set to OFF.
2. Locate the applicable ignition/injector fuse located in the fuse box.

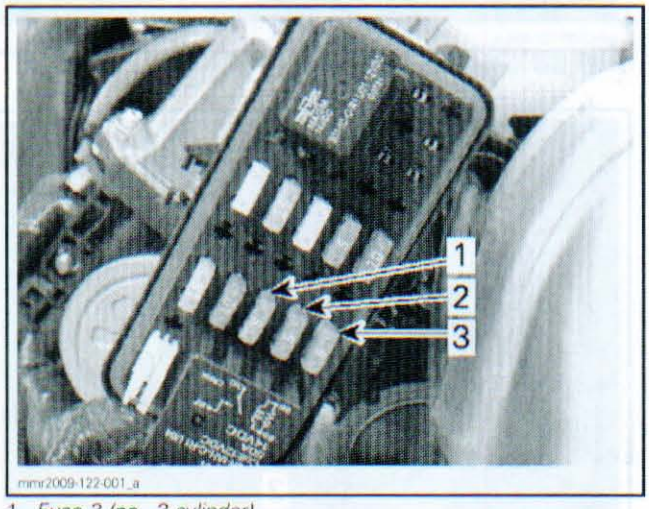

mmr2009-122-001_a

1. *Fuse 3 (no. 3 cylinder)*
2. *Fuse 4 (no. 2 cylinder)*
3. *Fuse 5 (no. 1 cylinder)*

3. Remove air intake silencer, refer to *AIR INTAKE SYSTEM* subsection.
4. Disconnect ignition coil connector.
5. Test for continuity of circuit as per following table.

NOTE: Probe the metallic part on top of the fuse.

POWER INPUT WIRE CONTINUITY TEST (COIL)			
COIL	COIL CONNECTOR	FUSE BOX CONTACT	RESISTANCE
Cylinder 1	Pin 1 (PURPLE/BLUE)	4A (fuse 5)	Close to 0 Ω (continuity)
Cylinder 2	Pin 1 (PURPLE/GREEN)	4B (fuse 4)	
Cylinder 3	Pin 1 (PURPLE/ORANGE)	4C (fuse 3)	

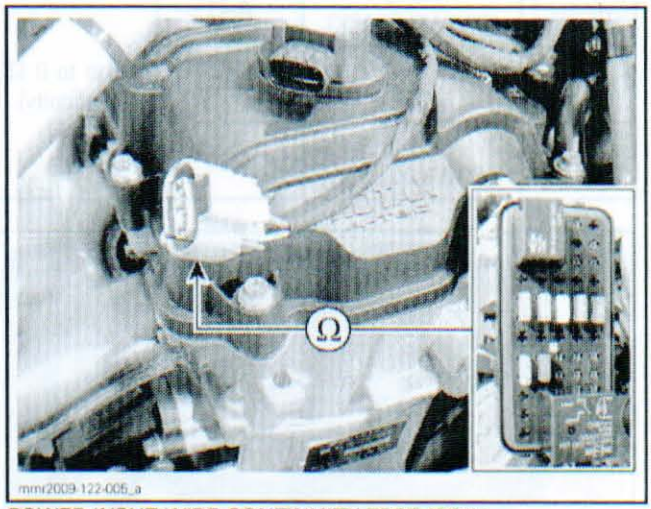

mmr2009-122-005_a

POWER INPUT WIRE CONTINUITY TEST (COIL)

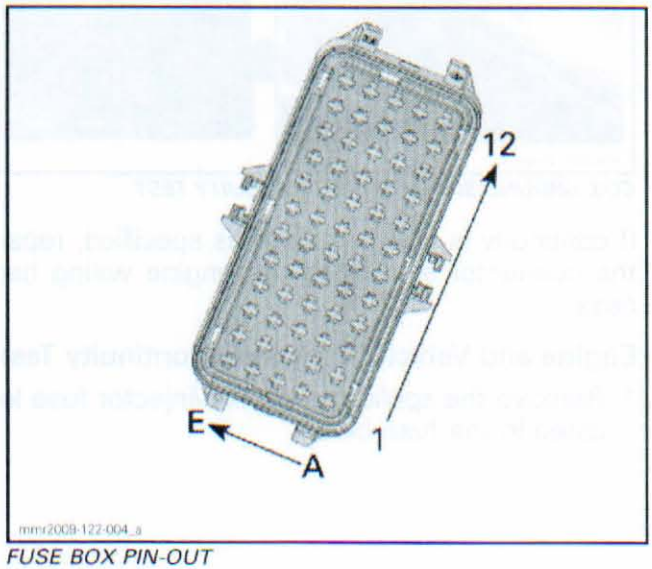

mmr2009-122-004_a

FUSE BOX PIN-OUT

If continuity is not measured as specified, test the engine and vehicle harnesses. Reinstall removed fuses.

www.midwestmanuals.com

Ground Signal Wire (Ignition Coil)

1. Remove air intake silencer, refer to *AIR INTAKE SYSTEM* subsection.
2. Disconnect ECM connector A and install it on the ECM ADAPTER TOOL (2 CONNECTORS) (P/N 420 277 010).
3. Disconnect ignition coil connector.
4. Test for continuity of coil ground signal circuit as per following table.

GROUND WIRE CONTINUITY TEST (COIL)			
COIL	COIL CONNECTOR	ECM PIN	RESISTANCE
Cylinder 1	Pin 3 (BROWN/BLACK)	A-41	Close to 0 Ω (continuity)
Cylinder 2	Pin 3 (BROWN/GREEN)	A-1	
Cylinder 3	Pin 3 (BROWN/YELLOW)	A-29	

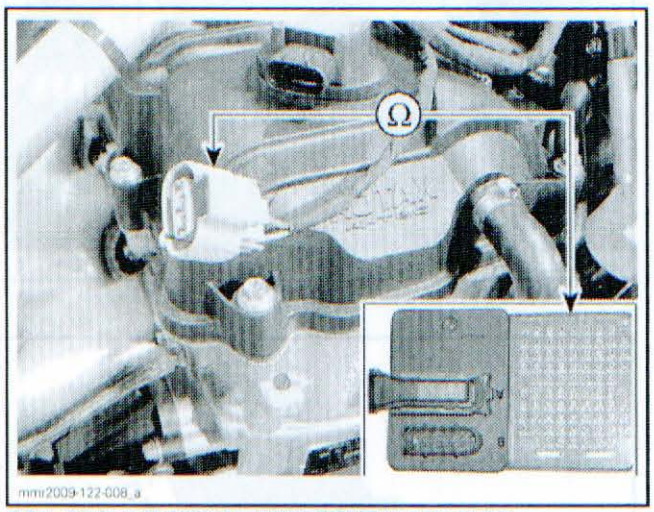

COIL GROUND SIGNAL WIRE CONTINUITY TEST

If continuity is not measured as specified, repair the connector or replace the engine wiring harness.

Engine and Vehicle Harnesses Continuity Test

1. Remove the applicable ignition/injector fuse located in the fuse box.

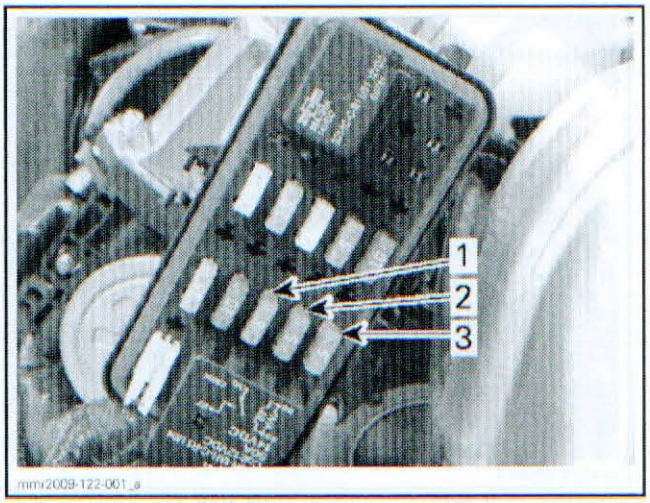

1. *Fuse 3 (no. 3 cylinder)*
2. *Fuse 4 (no. 2 cylinder)*
3. *Fuse 5 (no. 1 cylinder)*

2. Disconnect the engine connector located in front of the ECM connectors.

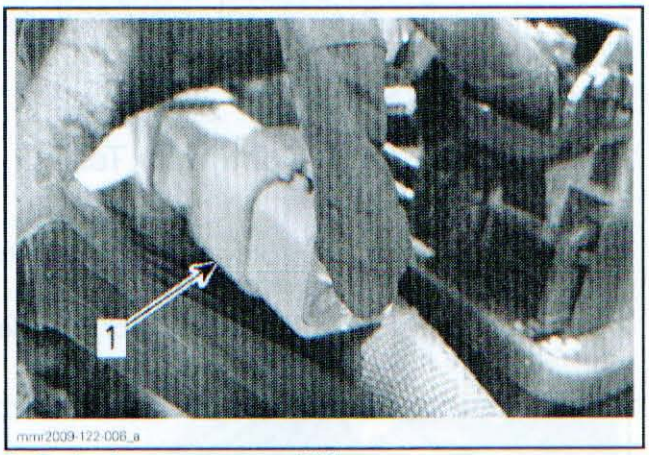

1. *Engine harness connector (HIC)*

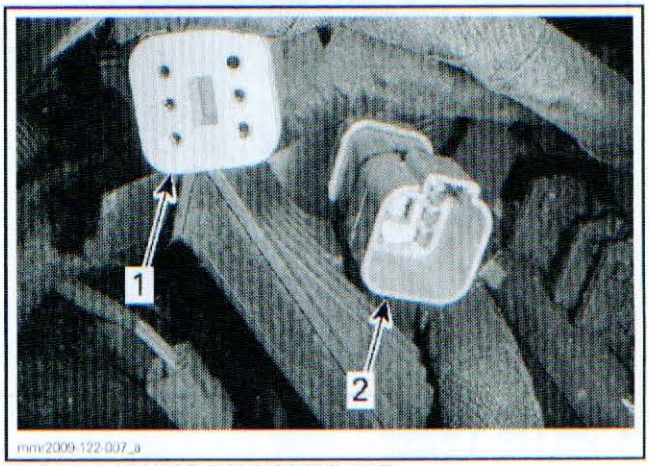

ENGINE HARNESS CONNECTOR (HIC)
1. *Vehicle harness side*
2. *Engine harness side*

3. Test for continuity of circuit as per following tables.

www.midwestmanuals.com

POWER INPUT WIRE CONTINUITY TEST (ENGINE HARNESS)			
COIL	COIL CONNECTOR	ENGINE HARNESS CONNECTOR	RESISTANCE
Cylinder 1	Pin 1 (PURPLE/BLUE)	Pin1 (PURPLE/BLUE)	Close to 0 Ω (continuity)
Cylinder 2	Pin 1 (PURPLE/GREEN)	Pin 2 (PURPLE/GREEN)	
Cylinder 3	Pin 1 (PURPLE/ORANGE)	Pin 3 (PURPLE/ORANGE)	

POWER INPUT WIRE CONTINUITY (VEHICLE HARNESS)			
COIL	VEHICLE HARNESS CONNECTOR	RELAY FUSE BOX CONTACT	RESISTANCE
Cylinder 1	Pin1 (PURPLE/BLUE)	4A	Close to 0 Ω (continuity)
Cylinder 2	Pin 2 (PURPLE/GREEN)	4B	
Cylinder 3	Pin 3 (PURPLE/ORANGE)	4C	

Repair or replace wiring or connector as required.

4. Reinstall removed fuses.

Ignition Coil Resistance Test

An ignition coil with a good resistance measurement can still be faulty. Current leakage can occur at high voltage levels which is not detectable with an ohmmeter. Replacing the ignition coil may be necessary as a test.

Primary Winding

1. Remove ignition coil. Refer to *IGNITION COIL REMOVAL* in this subsection.
2. Set the multimeter to Ω and measure primary winding resistance as specified.

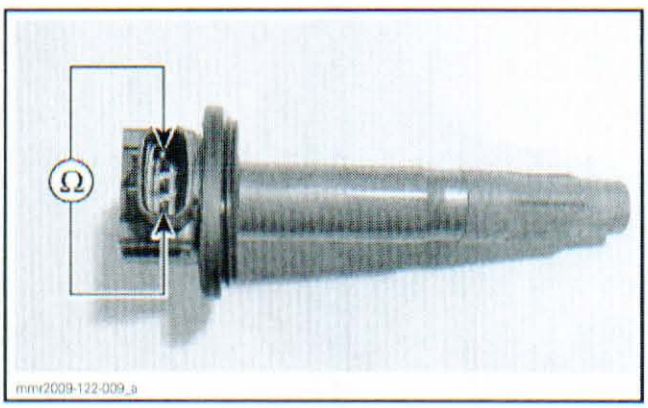

CIRCUIT	PIN	RESISTANCE @ 20°C (68°F)
Primary	1 and 3	0.8 - 0.97 Ω

If resistance is not within specification, replace ignition coil.

Secondary Winding

The secondary winding on this type of ignition coil cannot be tested.

Ignition Coil Removal

1. Refer to *AIR INTAKE SYSTEM* subsection and remove air intake silencer.
2. Disconnect ignition coil connector.
3. Remove coil retaining screw.

NOTICE **Do not pry on ignition coil with a tool.**

4. Remove ignition coil from spark plug by rotating coil side to side as you pull up.

NOTE: For cylinder 2, turn steering column to ease ignition coil removal.

Ignition Coil Installation

1. Align the retaining screw hole of the ignition coil with the threaded hole on the valve cover.
2. Install the ignition coil on the spark plug and push it all the way down until it rests on the valve cover.
3. Install the retaining screw an tighten to 11 N•m (97 lbf•**in**).
4. Connect ignition coil connector.

SPARK PLUGS

Spark Plug Removal

1. Remove ignition coil as explained in this subsection.
2. Using an approved spark plug socket, release the torque applied to the spark plug and unscrew a few turns.

www.midwestmanuals.com

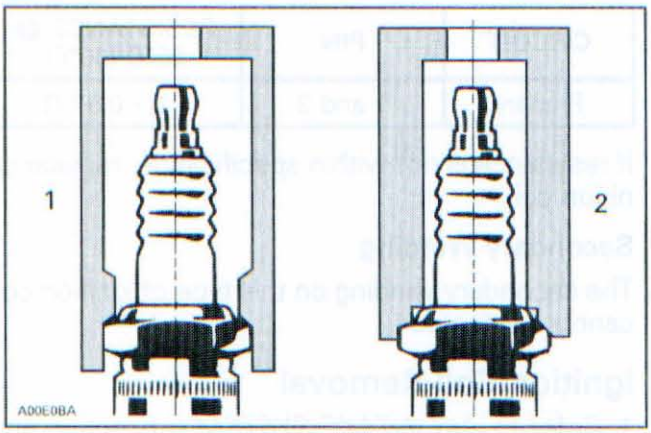

1. Aproved socket
2. Improper socket

3. Clean the spark plug and cylinder head with pressurize air.
4. Remove spark plug.

Troubleshooting a Fouled Spark Plug

Fouling of the spark plug is indicated by irregular running or misfiring of the engine, decreased engine speed due to misfiring, reduced performance, and increased fuel consumption.

Other possible causes are: a incorrect or bad fuel, defective ignition system, incorrect spark plug gap, loss of compression, or lubricating oil entering the combustion chamber.

The plug face of a fouled spark plug has either a wet or dry black carbon deposit. Such coatings form a conductive connection between the center electrode and the ground electrode.

Spark Plug Analysis

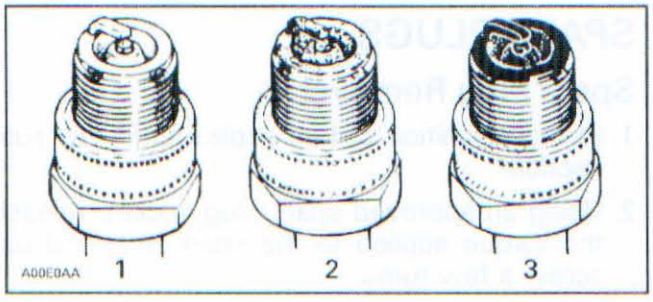

TYPICAL
1. Overheated (light grey, white)
2. Normal (light brown, brown)
3. Fouled (black, wet or dry, dark deposits, grey, melted coating)

The plug face reveals the condition of the engine, operating condition, method of driving and fuel mixture. For this reason it is advisable to inspect the spark plug at prescribed intervals, examining the plug face (i.e. the part of the plug projecting into the combustion chamber).

Spark Plug Installation

Prior to installation, ensure the contact surfaces of the cylinder head and spark plug are free of grime.

1. Using a wire feeler gauge, check electrode gap as specified in the following chart.

NOTICE **Do not adjust gap on this type of spark plug. The adjustment could weaken negative electrodes which may lead to electrode breakage and severe engine damage.**

ENGINE	SPARK PLUG	TORQUE	GAP mm (in)
1203 4-TEC	NGK CR8EKB	11 N•m (97 lbf•in)	0.7 mm (.028 in)

2. Hand screw spark plug into cylinder head. Then, tighten the spark plug clockwise to specified torque with an approved spark plug socket.
3. Carry out *IGNITION COIL INSTALLATION* procedure as explained in this subsection.
4. Complete the installation in the reverse order of the removal.

www.midwestmanuals.com

CHARGING SYSTEM

SERVICE TOOLS

Description	Part Number	Page
FLUKE 115 DIGITAL MULTIMETER	529 035 868	242, 244–245

SERVICE TOOLS – OTHER SUPPLIER

Description	Part Number	Page
EXTECH AMMETER	380941	242
FLUKE RIGID BACK PROBES	TP88	245
NAPA ULTRA PRO BATTERY LOAD TESTER	95260	248

SERVICE PRODUCTS

Description	Part Number	Page
DIELECTRIC GREASE	293 550 004	249

GENERAL

SYSTEM DESCRIPTION

Magneto

A magneto provides the primary source of electrical energy. It transforms a magnetic field into an alternating current (AC).

The magneto is comprised of a 3 phase delta wound stator.

AC current is rectified and regulated by a voltage regulator between 13.8 and 14.5 volts DC for primary power to the vehicle electrical system and to charge the battery.

Voltage Regulator

The voltage regulator has two connectors.

- An AC input connector coming from the magneto stator (YELLOW wires).
- A DC output connector that holds the supply wire (RED/WHITE) and the ground wire (BLACK).

The voltage regulator DC output (RED/WHITE wire) supplies to all the vehicle needs in current when engine is running and charges the battery through the 30 A main fuse (FA).

The voltage regulator is grounded to the chassis through the black wire.

The voltage regulator is located on the RH side of tunnel in front of the fuel tank.

Battery

A battery is installed as a secondary power source. It is primarily used for energizing the ECM, gauge and starter.

The battery also provides a stable voltage to the voltage regulator to ensure the ECM operates normally.

On vehicles equipped with a high end multifunction gauge, it also provides power to maintain the clock function within the gauge.

NOTE: Never use a battery charger to temporarily substitute the battery as it may cause the ECM (engine control module) to function erratically or not at all.

INSPECTION

CHARGING SYSTEM OUTPUT

DC Voltage Output Test

NOTE: The charging system can have an adequate voltage output while being unable to provide enough current for the vehicle's needs. In doubt, perform the current output test.

1. Raise vehicle and ensure the track is off the ground and can turn freely.

www.midwestmanuals.com

⚠ WARNING

Make sure vehicle track is completely raised off ground. If track should come into contact with ground when engine is at high RPM, equipment damage and severe injury may result.

2. Remove RED rubber boot protector from positive battery post.
3. Set the FLUKE 115 DIGITAL MULTIMETER (P/N 529 035 868) to Vdc scale.
4. Connect multimeter to battery posts.
5. Start engine and read voltage as follows.

DC VOLTAGE OUTPUT TEST			
TEST ENGINE SPEED	TEST PROBES		VOLTAGE
4000 RPM	Battery (+)	Battery (-)	13.8 - 14.8 Vdc

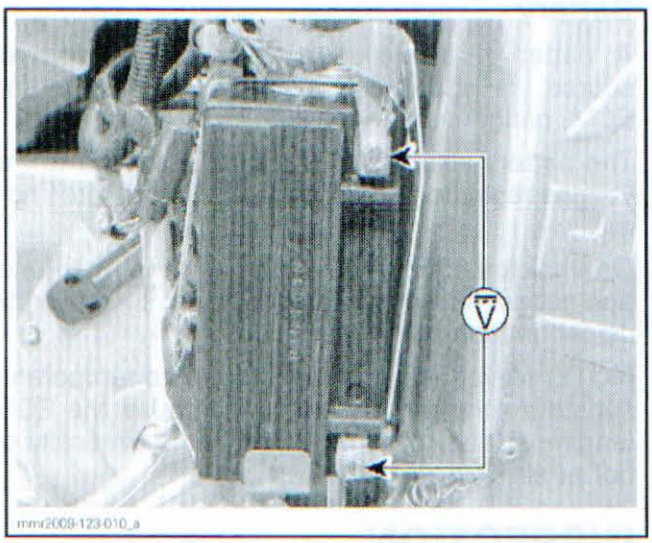

mmr2009-123-010_a

If voltage is above specification, replace voltage regulator.

If voltage is below specification, check the following:

- Check stator wires (YELLOW) and terminals at voltage regulator for damage.
- Test stator, refer to *MAGNETO AND STARTER* subsection.
- Perform wiring tests. Refer to *VOLTAGE REGULATOR* in this subsection.

DC Current Output Test

1. Move fuel tank back, refer to *FUEL TANK AND FUEL PUMP* section.
2. Raise vehicle and ensure the track is off the ground and can turn freely.

⚠ WARNING

Make sure vehicle track is completely raised off ground. If track should come into contact with ground when engine is at high RPM, equipment damage and severe injury may result.

3. Carefully open the protective sheath covering the wires enough to allow ammeter clamp installation.
4. Measure current using an inductive ammeter such as the EXTECH AMMETER (P/N 380941).
   - 4.1 Install ammeter clamp over the RED/WHITE wire nearby the voltage regulator.

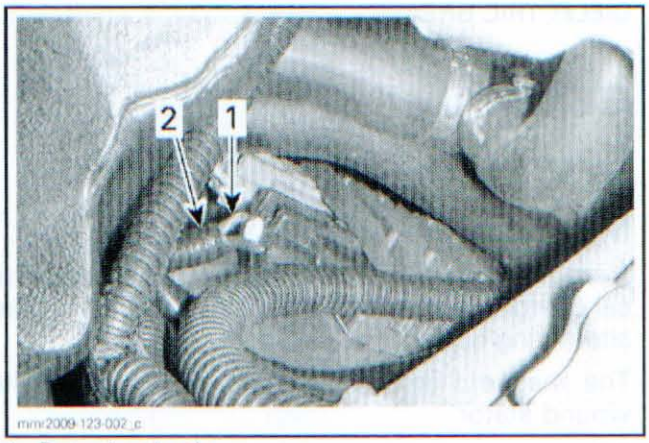

mmr2009-123-002_c

1. *Protective sheath*
2. *RED/WHITE wire*

   - 4.2 Start engine.
   - 4.3 Set the heated grips and throttle lever to the highest intensity and the headlights to high beam.
   - 4.4 Rev engine at 4000 RPM and read ammeter.

DC CURRENT OUTPUT TEST	
TEST ENGINE SPEED	MINIMUM CURRENT
4000 RPM	25 A

If current reading is significantly below specification, do the following:

- Check stator wires (YELLOW) and terminals at voltage regulator for damage.

www.midwestmanuals.com

- Test stator, refer to *MAGNETO AND STARTER* subsection.
- Perform wiring tests. Refer to *VOLTAGE REGULATOR* in this subsection.

TROUBLESHOOTING

NOTE: It is good practice to check for fault codes using B.U.D.S. software as a first troubleshooting step. Refer to *MONITORING SYSTEM/FAULT CODES*.

DIAGNOSTIC TIPS

Weak or Discharged Battery

If the battery is weak or discharged, check the following:

- Check battery. Refer to *BATTERY* in this subsection.
- Check items in *LOW OR NO CHARGING SYSTEM VOLTAGE*.
- Check charging current output, refer to *INSPECTION* in this subsection.

Low or No Charging System Voltage

If charging system voltage is low, the engine may be unstable, or stall.

Test the following items:

- Charging system voltage, refer to *INSPECTION* in this subsection
- Test stator, refer to *MAGNETO AND STARTER* subsection
- Wiring and connections, refer to *VOLTAGE REGULATOR* in this subsection.

PROCEDURES

MAIN FUSE

Fuse Location

The 30 A main system fuse is located on the battery retaining plate.

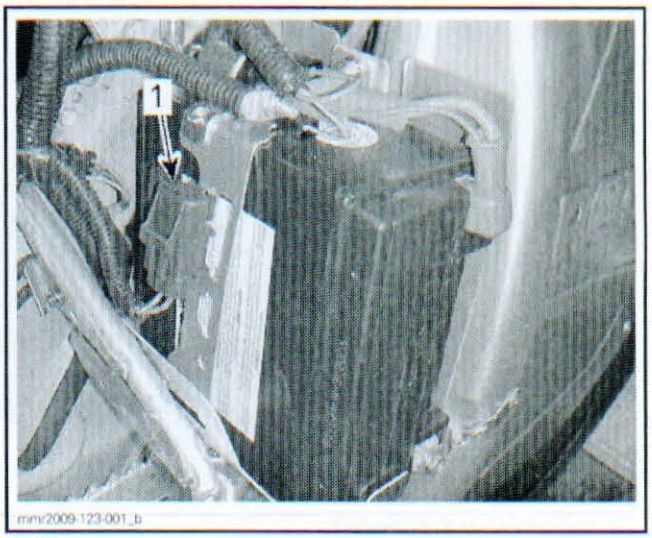

1. Main fuse

NOTE: If fuse blows while engine is running, engine will stall. If engine is not running and the fuse is blown, engine will not start.

Troubleshooting a Blown Main Fuse

A defective voltage regulator, loose connection, damaged wires or terminals can cause the fuse to blow.

1. Disconnect regulator connectors and inspect wires and terminals for damage.

NOTE: It may be necessary to move fuel tank back make room. Refer to *FUEL TANK AND FUEL PUMP*.

2. Keep the regulator disconnected and install a new fuse.

If the fuse still burns, check the DC wiring between main fuse and fuse box for a short circuit to ground. Refer to *WIRING DIAGRAM* for details.

If fuse does not burn with a disconnected voltage regulator, replace regulator.

MAIN GROUND CABLES

Main Ground Cables Inspection

Make sure main ground cables and terminals are in good condition, tight and free of corrosion.

www.midwestmanuals.com

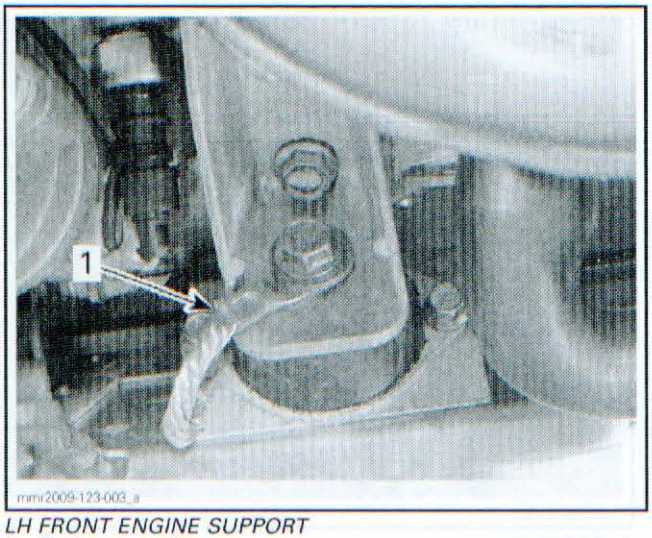

LH FRONT ENGINE SUPPORT
1. Engine ground

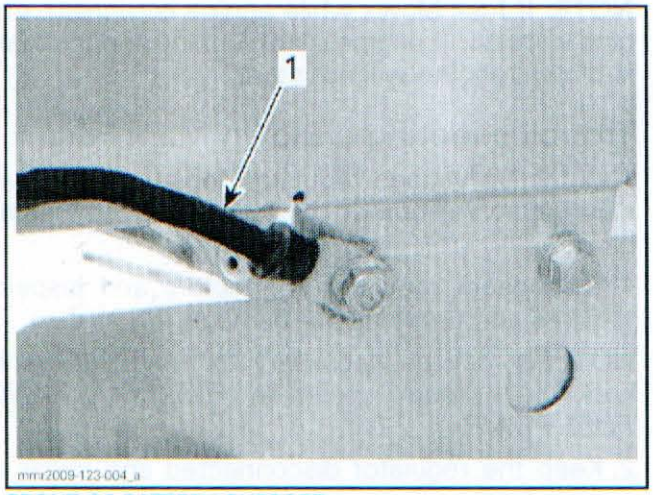

FRONT OF BATTERY SUPPORT
1. Battery ground

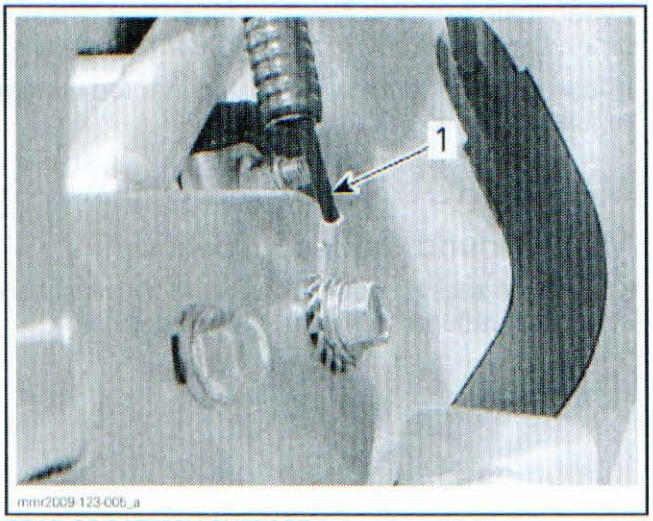

REAR OF BATTERY SUPPORT
1. Chassis ground

VOLTAGE REGULATOR

Wiring Continuity Verification (Voltage Regulator)

1. Disconnect battery.
2. Disconnect regulator DC connector.
3. Remove the main fuse from its holder.
4. Set the FLUKE 115 DIGITAL MULTIMETER (P/N 529 035 868) to Ω and measure resistance as follows:

TEST PROBES		RESISTANCE
Charge wire (RED) at battery	Fuse holder pin B (RED wire)	Close to 0 Ω

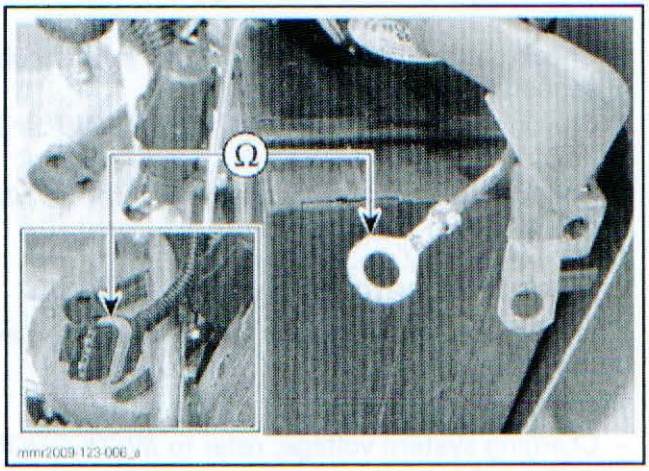

TEST PROBES		RESISTANCE
Regulator DC connector pin 1 (RED/WHITE wire)	Fuse holder pin A (RED/WHITE wire)	Close to 0 Ω

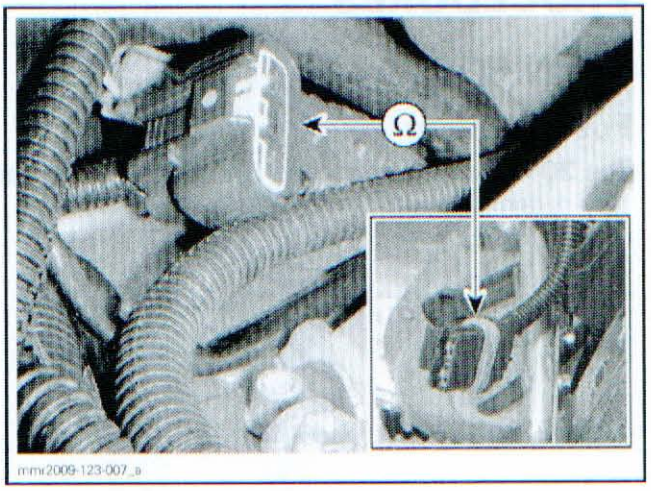

www.midwestmanuals.com

TEST PROBES		RESISTANCE
Regulator DC connector pin 3 (BLACK wire)	Chassis ground	Close to 0 Ω

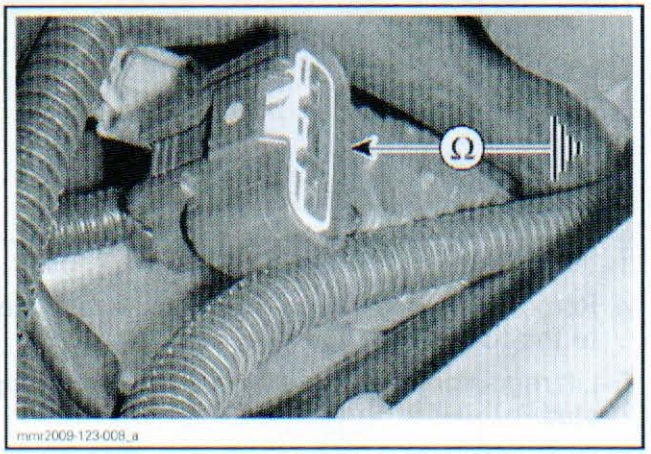

If a high resistance is read, check wire for corrosion or damage.

Wiring Voltage Drop Verification (Voltage Regulator)

In some cases, even if the continuity tests good, a parasitic resistance may affect the circuit. In these cases, a voltage drop test is more accurate.

Supply Wire Voltage Drop Test

1. Move fuel tank back, refer to *FUEL TANK/FUEL PUMP* section.

NOTE: Do not disconnect the regulator DC connector.

2. Back probe pin 1 (RED/WHITE wire) of the DC connector at voltage regulator using the FLUKE RIGID BACK PROBES (P/N TP88).

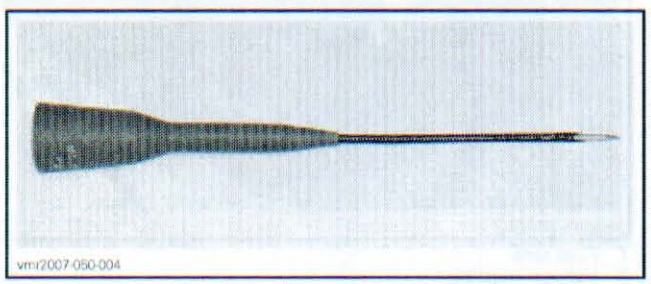

3. Set the FLUKE 115 DIGITAL MULTIMETER (P/N 529 035 868) to Vdc.
4. Start engine.
5. Set the heated grips and throttle lever to the highest intensity and the headlights to high beam.

NOTE: On models equipped with a premium gauge, heated throttle lever and grips are enabled from 2000 RPM.

6. Measure voltage between the following points.

REGULATOR DC CONNECTOR	BATTERY	VOLTAGE DROP
Pin 1 (RED/WHITE wire)	Positive Post (+)	Maximum 1 volt

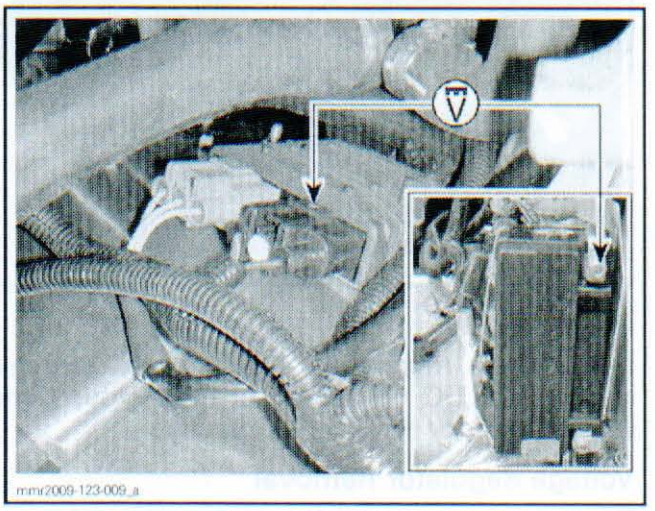

7. Stop engine.

If reading is more than 1 volt, check terminals at regulator DC connector, RED/WHITE wire and fuse holder for corrosion or damage.

Ground Circuit Voltage Drop Test

1. Back probe pin 3 (BLACK wire) of the DC connector at voltage regulator using the FLUKE RIGID BACK PROBES (P/N TP88).
2. Set the FLUKE 115 DIGITAL MULTIMETER (P/N 529 035 868) to Vdc.
3. Start engine.
4. Set the heated grips and throttle lever to the highest intensity and the headlights to high beam.
5. Measure voltage between the following points.

www.midwestmanuals.com

REGULATOR DC CONNECTOR	CHARGING SYSTEM FUSE HOLDER (FA)	VOLTAGE DROP
Pin 3 (BLACK wire)	Chassis ground	Maximum 1 volt

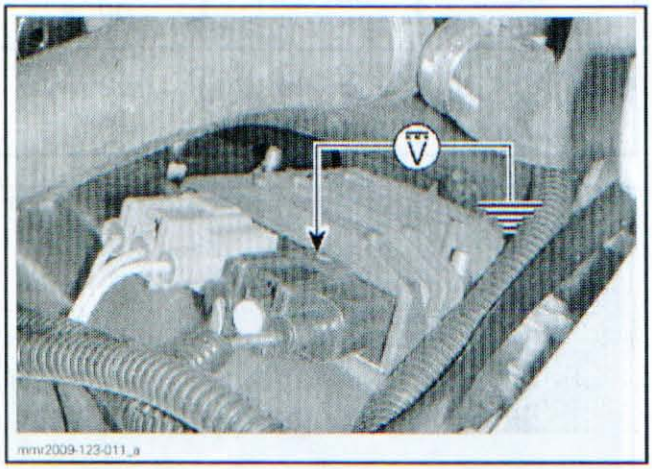

mmr2009-123-011_a

6. Stop engine.

If reading is more than 1 volt, check terminal at regulator DC connector, chassis ground and BLACK wire for corrosion or damage.

Voltage Regulator Removal

The voltage regulator is located on the right side of the frame just ahead of the fuel tank.

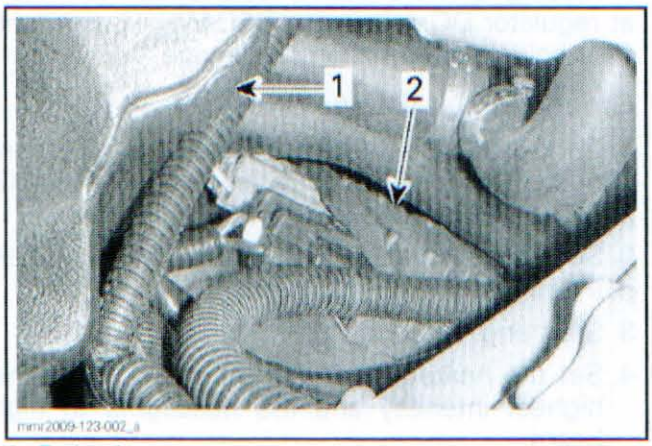

mmr2009-123-002_a

1. Fuel tank
2. Voltage regulator

1. Disconnect battery.
2. Move fuel tank back, refer to *FUEL TANK/FUEL PUMP* section.
3. Disconnect the voltage regulator connectors.

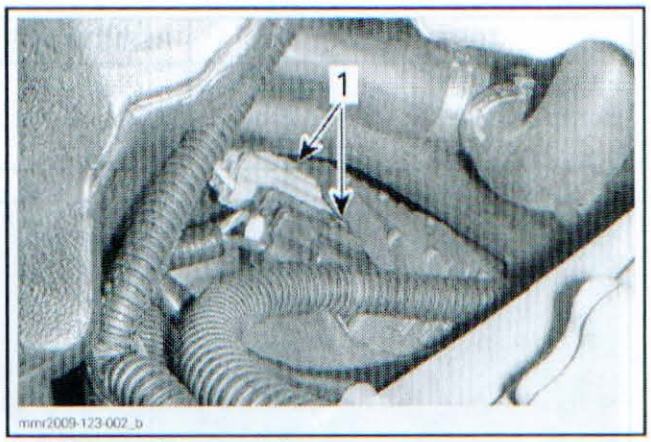

mmr2009-123-002_b

1. Voltage regulator connectors

4. Remove both elastic nut retaining the regulator to the tunnel.
5. Lift regulator up to free it from the LH mounting stud.
6. Pivot regulator counterclockwise, then free it from the RH mounting stud.

Voltage Regulator Installation

Installation is the reverse order of removal procedure.

Torque voltage regulator screws to 5 N•m (44 lbf•**in**).

Voltage Regulator Removal

The voltage regulator is located on the right side of the frame just ahead of the fuel tank.

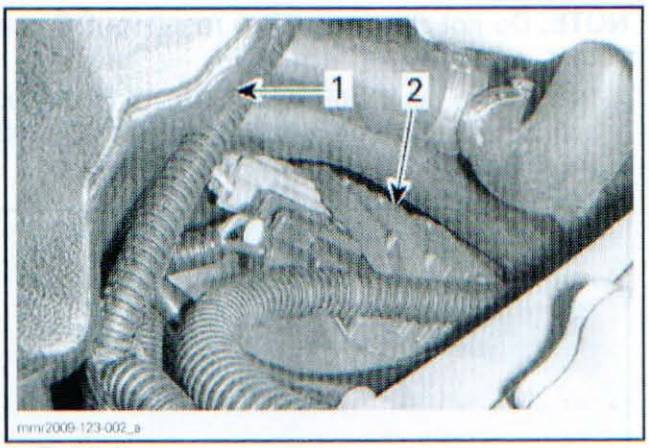

mmr2009-123-002_a

1. Fuel tank
2. Voltage regulator

1. Disconnect battery.
2. Move fuel tank back, refer to *FUEL TANK/FUEL PUMP* section.
3. Disconnect the voltage regulator connectors.

www.midwestmanuals.com

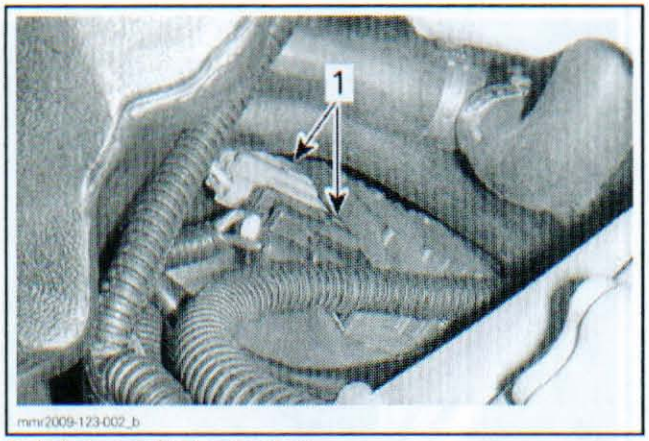

1. Voltage regulator connectors

4. Remove both elastic nut retaining the regulator to the tunnel.
5. Lift regulator up to free it from the LH mounting stud.
6. Pivot regulator counterclockwise, then free it from the RH mounting stud.

Voltage Regulator Installation

Installation is the reverse order of removal procedure.

Torque voltage regulator screws to 5 N•m (44 lbf•**in**).

BATTERY

The battery type is a sealed valve regulated lead acid (VRLA). It a non-spillable, maintenance reduced type (no electrolyte level to be checked and readjusted). No ventilation tube is attached to the battery.

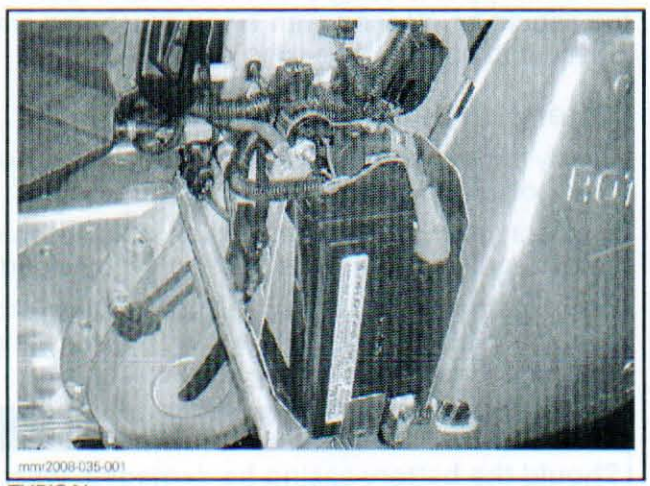

TYPICAL

Battery Testing

Battery Voltmeter Test (No Load Applied)

NOTE: An unloaded voltmeter test is carried out on a battery without discharging current. It is the simplest and most commonly used. However, be aware that a voltage test can indicate that the battery is in good condition even though the battery does not have enough power to crank the engine. A voltage reading provides an instant indication of the state of charge of the battery, not of its current storage capacity. A battery load test gives a more accurate indication of the battery condition.

If the battery has just received a charge, allow it to rest for 1 - 2 hours before taking a voltage reading.

Set multimeter to Vdc and connect to battery terminals. Always respect polarity.

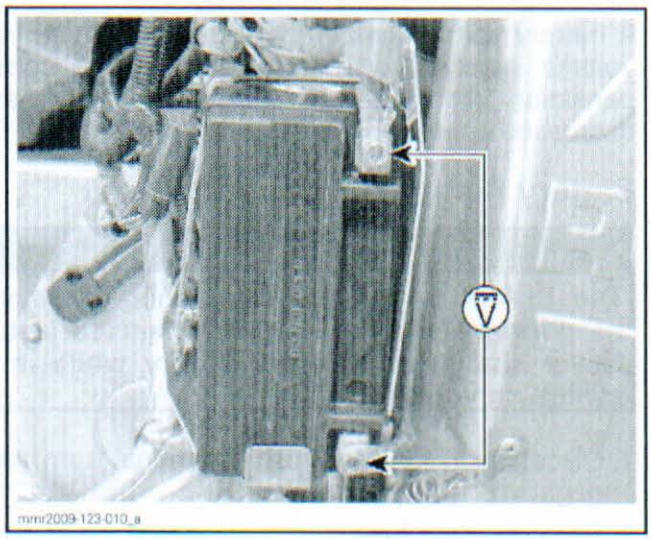

Batteries with a voltage above 12.8 V do not need to be charged.

Batteries with a voltage of 12.8 V and below need to be charged. Refer to *BATTERY CHARGING* in this section.

Battery Testing (Load Applied) Quick Test

The battery must be fully charged before testing.

1. Disconnect the regulator DC connector.
2. Set the multimeter to Vdc.
3. Start engine.
4. Set the heated grips and throttle lever to the highest intensity and the headlights to high beam.

NOTE: On models equipped with a premium gauge, heated throttle lever and grips are enabled from 2000 RPM.

5. Measure voltage on the battery terminals.

www.midwestmanuals.com

The battery voltage should be more than 10 Vdc.

If battery voltage reading is below 10 Vdc, storage capacity has decreased appreciably and battery should be replaced.

Battery Testing (Load Applied) Using a Load Tester

This is the best test used to determine the battery condition.

Using a load testing device such as the NAPA ULTRA PRO BATTERY LOAD TESTER (P/N 95260), test the storage capacity of the battery. It has a 500 Amp carbon pile adjustable load.

The battery must be fully charged before testing.

If battery has just been recharged, allow battery to rest for at least one hour.

Follow battery load tester instructions.

If battery voltage has dropped below 10 Vdc (or voltage indicated on battery temperature compensation chart), battery storage capacity has decreased appreciably and should be replaced.

Battery Removal

⚠ WARNING

The BLACK (–) battery cable must always be disconnected first and reconnected last. Never charge or boost a battery while installed on vehicle.

1. Disconnect BLACK (–) cable terminal from the negative battery post.
2. Remove main fuse.
3. Slide the RED rubber boot off the (+) cable terminal and disconnect it from the battery post.
4. Remove the battery retaining plate nut and bolt.

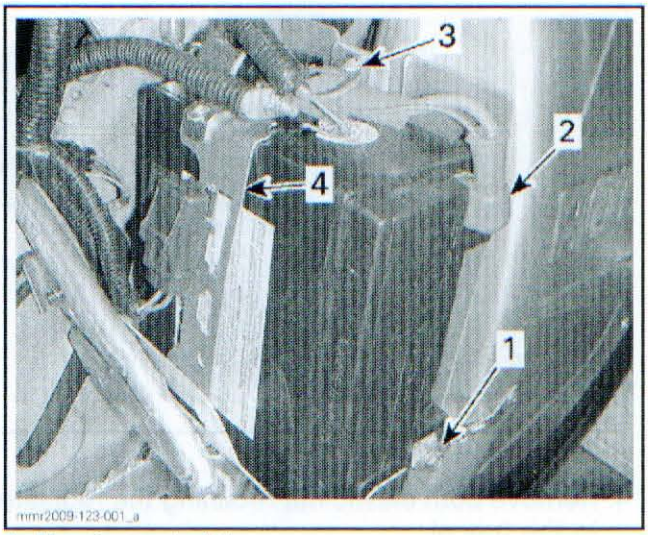

1. *Negative terminal (-)*
2. *Red rubber boot protector and positive terminal (+)*
3. *Battery retaining plate bolt*
4. *Battery retaining plate*

5. Lift the retaining plate and unhook it from the battery support to remove it.
6. Move retaining plate aside.
7. Remove battery.

NOTICE **Should any electrolyte spillage occur, immediately wash off with a solution of baking soda and water to prevent damage to vehicle components.**

Battery Cleaning

Clean the battery, battery casing, cables and battery posts using a solution of baking soda and water.

Remove corrosion from battery cable terminals and battery posts using a firm wire brush. Battery top should be cleaned with a soft brush and any grease-cutting soap or baking soda solution.

Battery Inspection

Visually inspect battery casing for cracks, leaks or other possible damage.

Discoloration, warping or raised top, indicates that the battery has overheated or been overcharged.

If the casing is damaged, replace battery and thoroughly clean battery tray and surrounding area with a water and baking soda solution.

⚠ WARNING

Should the battery casing be damaged, wear a suitable pair of non-absorbent gloves when removing the battery by hand.

Inspect the battery posts for security of mounting.

www.midwestmanuals.com

Battery Storage

NOTICE A discharged battery will freeze and may damage its casing. A damaged casing will allow electrolyte spillage that may damage surrounding parts.

1. Disconnect and remove battery from the vehicle.
2. Clean battery terminals and cable connections using a wire brush. Apply a light coat of DIELECTRIC GREASE (P/N 293 550 004) or petroleum jelly on terminals.
3. Clean battery casing using a solution of baking soda and water. Rinse battery with clear water and dry thoroughly using a clean cloth.

NOTE: The battery must always be stored in fully a charged condition.

4. Charge the battery every month if stored at a temperature **below** 15°C (60°F).
5. Charge the battery every two week if stored at a temperature **above** 15°C (60°F).

New Battery Activation

Refer to the instructions provided with the battery.

Battery Charging

⚠ WARNING

Always wear safety glasses and charge the battery in a ventilated area. Never charge or boost a battery while installed on a vehicle. Do not open the sealed caps during charging. Do not place battery near an open flame.

NOTICE If battery becomes hot to the touch, stop charging and allow it to cool before continuing.

NOTE: Sealed VRLA batteries have an internal safety valve. If battery pressure increases due to overcharging, the valve opens to release excess pressure, preventing battery damage.

Carry out a battery *UNLOADED VOLTMETER TEST* as described in this section, then proceed as described here.

An automatic charger is the fastest and most convenient way for error-proof charging.

When using a constant current charger, charge battery according to the chart below.

Battery Voltage Below 12.8 V and Above 11.5 V

STANDARD CHARGING (RECOMMENDED)		
BATTERY TYPE	TIME	CHARGE
YTX20HL-BS	5 - 10 hours	2 A

QUICK CHARGING		
BATTERY TYPE	TIME	CHARGE
YTX20HL-BS	50 minutes	10 A

Battery Voltage Below 11.5 V

A battery with a voltage below 11.5 V requires a special procedure to recharge. In charging an over discharged battery, its internal resistance may be too high to charge at a normal charging rate.

Set charger to the 10 A charging rate and monitor charging current for approximately 30 minutes. If there is no change in charging current or battery becomes abnormally hot, the battery is most likely at the end of its service life and should be replaced.

Battery Installation

Reinstall battery and secure retaining plate to support properly.

Connect **RED (+) cables FIRST** to positive battery terminal.

Connect **BLACK (–) cable LAST**.

⚠ WARNING

Battery BLACK (–) cable must always be disconnected first and reconnected last.

Cover the RED (+) cable terminal with the protective rubber boot.

Apply DIELECTRIC GREASE (P/N 293 550 004) on battery posts and connectors.

www.midwestmanuals.com

www.midwestmanuals.com

STARTING SYSTEM

SERVICE TOOLS

Description	Part Number	Page
ECM ADAPTER TOOL (2 CONNECTORS)	420 277 010	253, 255
FLUKE 115 DIGITAL MULTIMETER	529 035 868	252, 254

SERVICE TOOLS – OTHER SUPPLIER

Description	Part Number	Page
FLUKE RIGID BACK PROBES	TP88	254–255

GENERAL

BASIC STARTING SYSTEM OPERATION

When the START/RER button is pressed, a 12 Vdc signal is sent to the ECM, which completes the starter solenoid circuit by providing a ground. The battery then supplies current to the starter through the starter solenoid to crank the engine.

Conditions for Engine Cranking

- Engine stop switch to RUN
- D.E.S.S. cap installed
- Press START/RER button.

TROUBLESHOOTING

DIAGNOSTIC TIPS

Check for fault codes using B.U.D.S. software as a first troubleshooting step. Refer to *MONITORING SYSTEM AND FAULT CODES*.

NOTE: Some tests require fuses removal which may lead to a fault code occurrence. Clear fault codes if needed.

Starter Does Not Turn

Carry out the following procedure to check if engine can be rotated.

1. Set engine stop switch to STOP.
2. Make sure D.E.S.S. key is **not installed**.
3. Manually rotate the engine using the drive pulley.

⚠ WARNING

When manually rotating engine, the engine stop switch MUST BE set to STOP and D.E.S.S. cap MUST NOT be installed or severe injury may occur.

If the engine can be rotated, test starting system as per *STARTING SYSTEM TESTING SEQUENCE*.

If the engine cannot be rotated, check engine.

Starter Turns Slowly

Check the following:

- Battery and connections condition, refer to *CHARGING SYSTEM*.
- Starter solenoid contacts. Refer to *SOLENOID VOLTAGE DROP TEST*.

Starter or RER Engage Accidentally

Carry out the *START/RER SWITCH GROUND TEST*.

STARTING SYSTEM TESTING SEQUENCE

Test starting system in the following order:

- Fuse 9 (in fuse box). If fuse 9 is blown, gauge will not turn on.
- Fuse 2 (in fuse box).
- Main fuse (on battery retaining plate). A blown main fuse cuts the current flow to the entire electrical system.
- Battery and connections condition, refer to *CHARGING SYSTEM*.
- Starter. Refer to *MAGNETO AND STARTER*.
- Starter solenoid. Refer to *SOLENOID QUICK TEST*.
- Start switch. Refer to *START/RER SWITCH TEST USING B.U.D.S.*

www.midwestmanuals.com

PROCEDURES

STARTER SOLENOID

Solenoid Quick Test

1. Remove D.E.S.S. cap from D.E.S.S. post.
2. Disconnect the small positive connector (VIOLET/GREY wire) from starter solenoid.
3. Install a jumper wire (with insulated clips) between the positive solenoid terminal and the positive battery terminal.
4. Disconnect the small negative connector (ORANGE/BLACK wire) from starter solenoid.
5. Install a jumper wire on the battery negative terminal and momentarily touch the negative solenoid terminal.

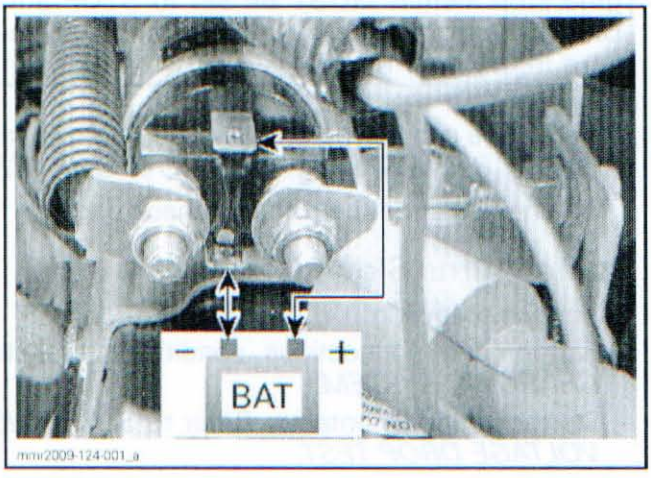

NOTICE **The two small solenoid coil terminals are close to each other. When installing the jumper wires, ensure the ends of the jumper wires are insulated and cannot come into contact with each other or a short circuit will occur.**

If the starter engages, test solenoid input voltage. Refer to *INPUT VOLTAGE TEST (STARTER SOLENOID).*

If the starter did not engage, refer to *STARTER SOLENOID STATIC TESTS*, or try a known good solenoid.

Input Voltage Test (Starter Solenoid)

1. Install D.E.S.S. cap on D.E.S.S. post.
2. Set engine stop switch to RUN.
3. Set FLUKE 115 DIGITAL MULTIMETER (P/N 529 035 868) to Vdc.
4. Quickly press on START/RER button to wake up the ECM.
5. Back probe the solenoid input terminal (VIOLET/GREY wire) and measure voltage as per following table.

TEST PROBES		VOLTAGE
VI/GY wire	Battery ground	Battery voltage

NOTE: Test is valid only if the ECM is powered (gauge will turn on).

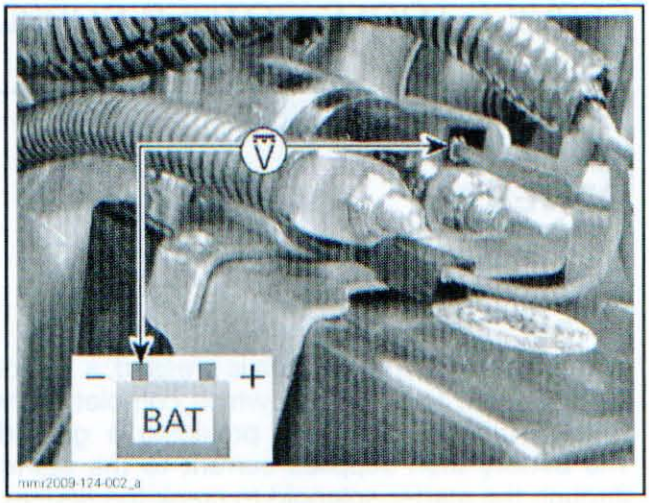

If voltage is not as specified, repair open circuit. Refer to *WIRING DIAGRAM* for details.

If the solenoid input voltage is as specified, refer to *SOLENOID GROUND SIGNAL TEST.*

Solenoid Ground Signal Test (Starter Solenoid)

1. Carry out steps 1 to 4 of *INPUT VOLTAGE TEST (STARTER SOLENOID).*
2. Back probe solenoid negative terminal (ORANGE/BLACK wire) and measure voltage as per following table.
3. Press and hold START/RER button and measure voltage as per following table to confirm ground signal.

TEST PROBES		VOLTAGE
OR/BK	Battery positive terminal	Battery voltage

www.midwestmanuals.com

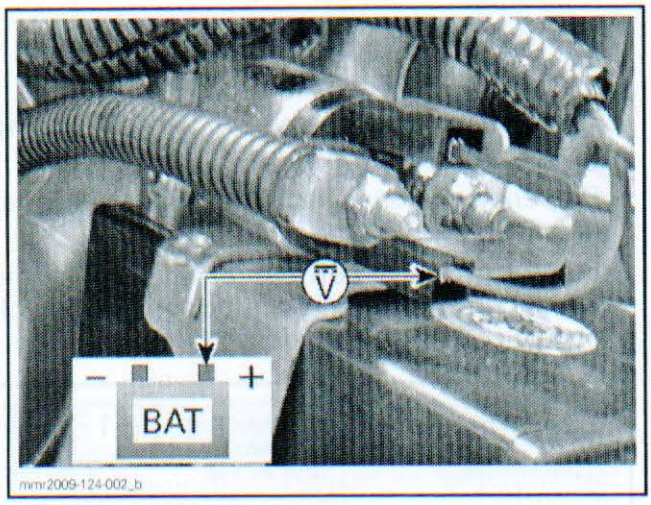

mmr2009-124-002_b

If voltage is not as specified, carry out *GROUND SIGNAL WIRE CONTINUITY TEST.*

Ground Wire Continuity Test (Starter Solenoid)

1. Disconnect battery negative terminal.
2. Disconnect ECM connector B, refer to *ELECTRONIC FUEL INJECTION.*
3. Connect ECM connector B to the ECM ADAPTER TOOL (2 CONNECTORS) (P/N 420 277 010).
4. Disconnect ground signal wire (ORANGE/BLACK) from starter solenoid.
5. Set mutimeter to Ω.
6. Measure wire continuity as follows:

TEST PROBES		RESISTANCE
Ground wire (OR/BK)	ECM connector B pin 31	Close to 0 Ω

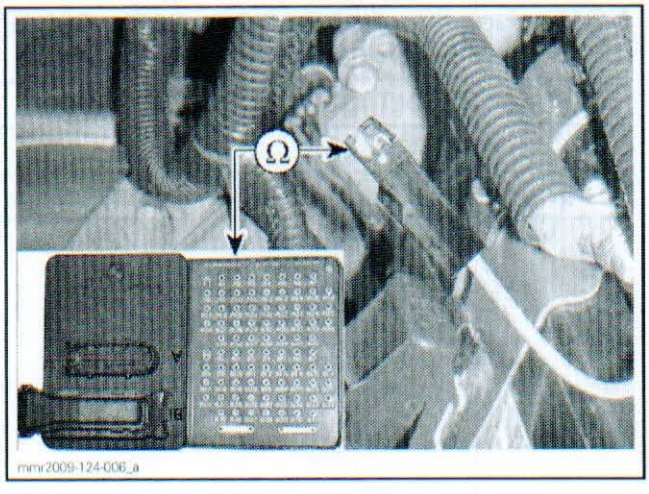

mmr2009-124-006_a

If resistance is not as specified, repair open circuit. Refer to *WIRING DIAGRAM* for wiring and connector details.

If resistance is as specified, test ECM grounds, refer to *ECM* in *ELECTRONIC FUEL INJECTION* subsection.

Solenoid Static Tests

Solenoid Winding Resistance Verification

1. Disconnect the small terminals from the starter solenoid.
2. With a multimeter set to Ω, test coil winding resistance as follows.

TEST PROBES		MEASUREMENT
SOLENOID COIL TERMINALS		RESISTANCE @ 20°C (68°F)
A	B	Approximately 7.5 Ω

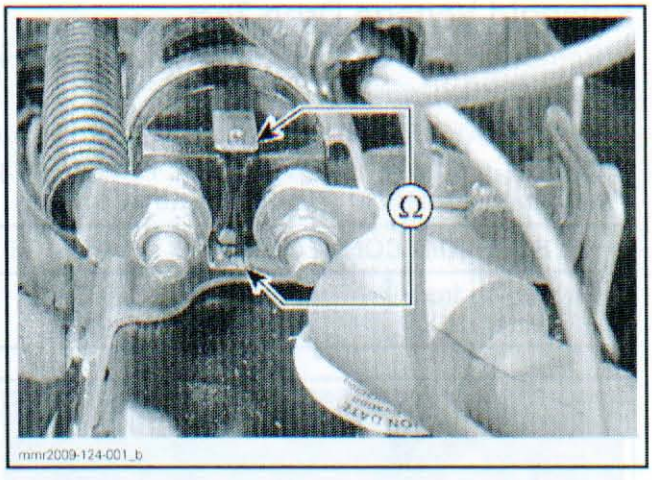

mmr2009-124-001_b

If resistance is not as specified, replace solenoid.

If resistance is as specified, refer to *SOLENOID VOLTAGE DROP TEST.*

Solenoid Plunger Verification

1. Disconnect battery ground cable.
2. Check for a stuck solenoid plunger by measuring the resistance through the solenoid main contacts as follows.

SOLENOID CONNECTOR		MEASUREMENT
Battery post	Starter post	Open circuit

www.midwestmanuals.com

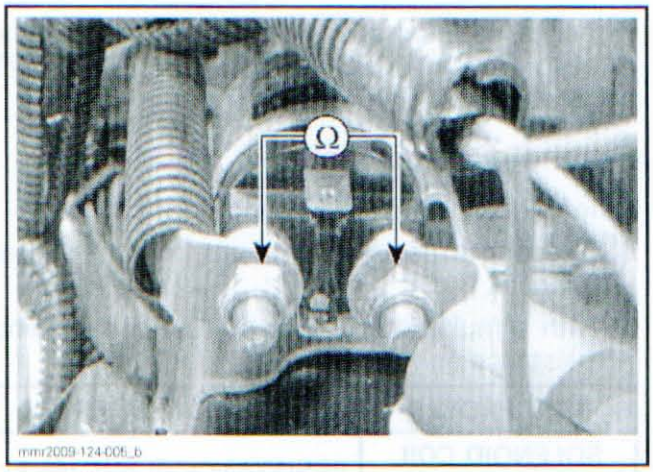

If a reading other than an open circuit is measured, replace solenoid.

Solenoid Voltage Drop Test

1. Remove fuses 3, 4 and 5 to prevent engine from starting.
2. Press START/RER button and hold. While engine is cranking, measure the voltage drop across the solenoid main contacts as follows.

SOLENOID CONNECTOR		VOLTAGE
Post coming from battery	Post going to starter	0.2 Vdc max.

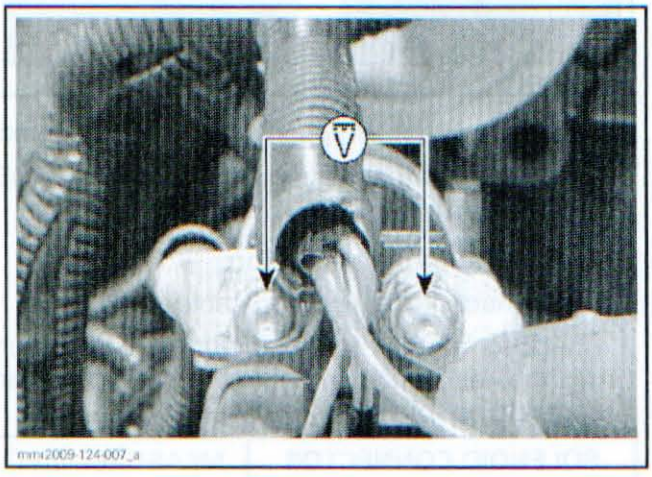

If voltage is out of specification, replace solenoid.

If solenoid tests good, test starter. Refer to *MAGNETO AND STARTER.*

START/RER SWITCH

START/RER Switch Test Using B.U.D.S.

1. Connect the vehicle to the latest B.U.D.S. software available from BOSSWeb. Refer to *COMMUNICATION TOOLS AND B.U.D.S. SOFTWARE* for proper connection instructions.
2. In B.U.D.S., select the **Read Data** button.
3. Select the **Monitoring** tab.
4. At the bottom LH corner of the **Monitoring** page, select the **ECM** tab.
5. Set engine stop switch to RUN and install D.E.S.S. cap on D.E.S.S. post.
6. Press the START/RER button and look for the **START Button** LED in the bottom section. It should come ON (turn GREEN).

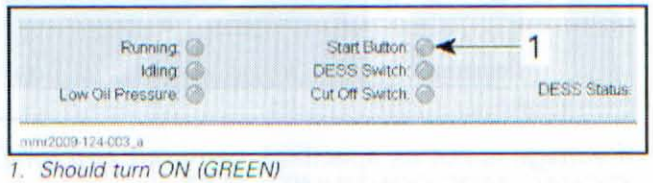

1. Should turn ON (GREEN)

If the START Button LED turns green, the ECM receives the START/RER positive signal. This confirms that:

- The voltage input reaches the START/RER switch.
- The START switch is good.
- The signal wiring is good.

Refer to *STARTING SYSTEM TESTING SEQUENCE* and test other components.

If the START/RER LED does **not** turn green refer to *START/RER INPUT VOLTAGE TEST.*

START/RER Switch Input Voltage Test

1. Remove steering cover from top of handlebars.
2. Set FLUKE 115 DIGITAL MULTIMETER (P/N 529 035 868) to Vdc
3. Back probe switch input wire at SB connector and measure voltage as per following table.

NOTE: Use the FLUKE RIGID BACK PROBES (P/N TP88) or equivalent to back probe wire.

INPUT VOLTAGE (SB CONNECTOR)		
TEST PROBES		VOLTAGE
Pin 3 (WH)	Battery ground	Battery voltage

www.midwestmanuals.com

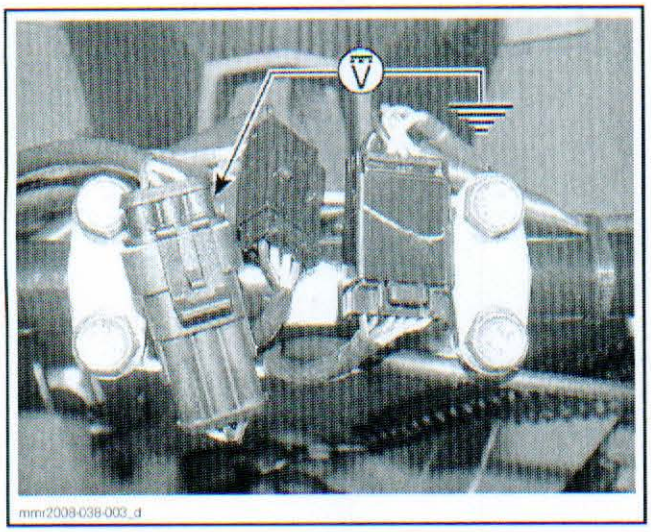

mmr2008-038-003_d

If voltage is as specified, refer to *START/RER SWITCH OUTPUT TEST.*

If voltage is not as specified, repair open circuit. Refer to *WIRING DIAGRAM* for wiring and connectors details.

START/RER Switch Output Voltage Test

Make sure Input voltage reaches START/RER switch.

1. Set multimeter to Vdc
2. Back probe switch output (signal) wire at SB connector.

NOTE: Use the FLUKE RIGID BACK PROBES (P/N TP88) or equivalent to back probe wire.

3. Press and hold START/RER button while measuring voltage as per following table.

SWITCH OUTPUT VOLTAGE (SB CONNECTOR)		
TEST PROBES		VOLTAGE
Pin 1 (BK)	Battery ground	Battery voltage

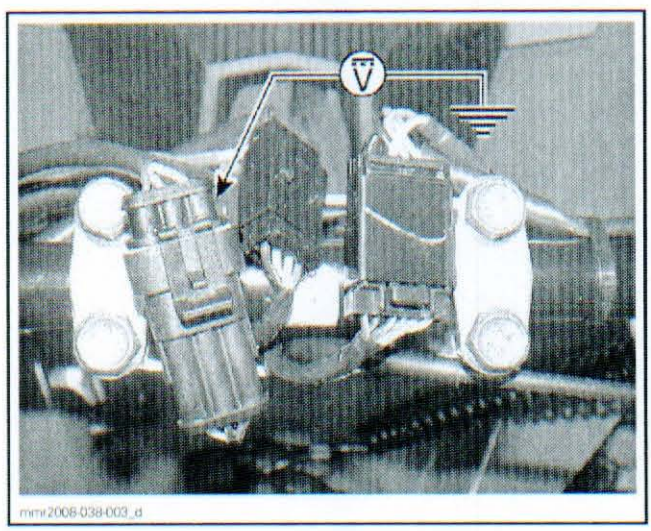

mmr2008-038-003_d

If voltage is as specified, refer to *START/RER SIGNAL WIRE CONTINUITY TEST.*

If voltage is not as specified, replace switch.

START/RER Signal Wire Continuity Test

1. Disconnect battery negative terminal.
2. Disconnect ECM connector B, refer to *ELECTRONIC FUEL INJECTION* section.
3. Install ECM ADAPTER TOOL (2 CONNECTORS) (P/N 420 277 010) on ECM connector B.
4. Disconnect SB connector.
5. Set multimeter to Ω and measure resistance as per following table.

TEST PROBES		RESISTANCE
SB connector Pin 1 (BE)	ECM connector B Pin 19	Close to 0 Ω

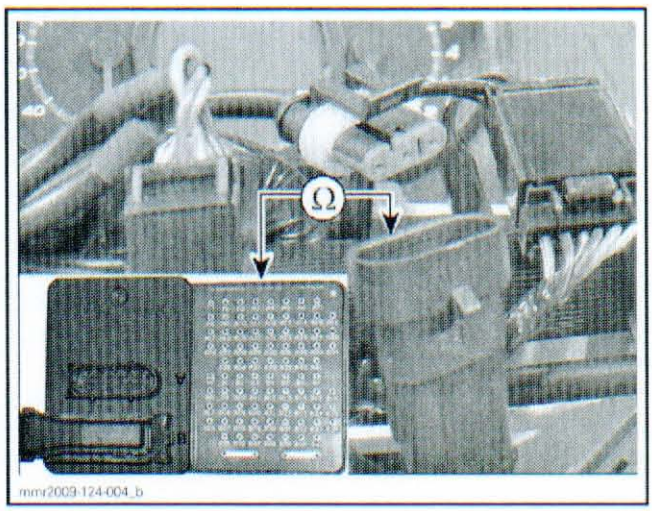

mmr2009-124-004_b

If resistance is as specified and switch input and output are good, try another ECM.

If resistance is not as specified, repair open circuit. Refer to *WIRING DIAGRAM* for wiring and connector details.

START/RER Switch Ground Test

1. Set multimeter to Vdc.
2. Disconnect SB connector.
3. Measure voltage as per following table.

TEST PROBES		VOLTAGE
SB connector Pin 2 (BK/BU)	Battery positive terminal	Battery voltage

www.midwestmanuals.com

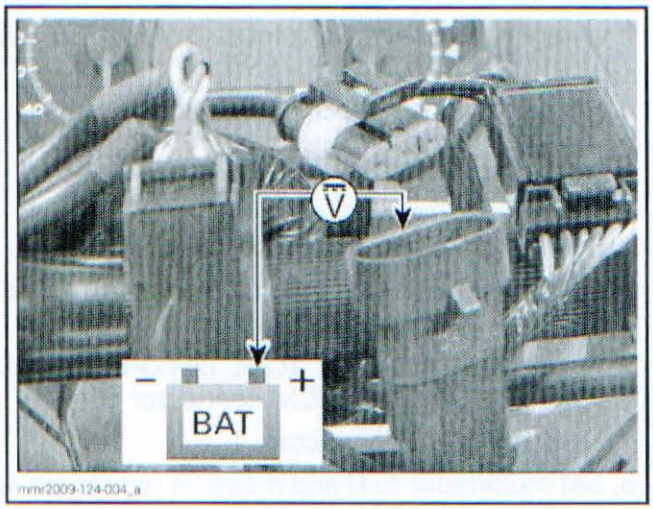

If voltage is not as specified, repair open circuit. Refer to *WIRING DIAGRAM* for wiring and connector details.

www.midwestmanuals.com

DIGITALLY ENCODED SECURITY SYSTEM (D.E.S.S.)

SERVICE TOOLS

Description	Part Number	Page
ECM ADAPTER TOOL (2 CONNECTORS)	420 277 010	261
FLUKE 115 DIGITAL MULTIMETER	529 035 868	260

GENERAL

SYSTEM DESCRIPTION

The following components are specially designed for this system: ECM, D.E.S.S. key and D.E.S.S. post.

This system allows the engine to reach pulley engagement speed only if a D.E.S.S. key is installed on D.E.S.S. post and the key is recognized as valid by the ECM.

The D.E.S.S. key contains a magnet and a ROM chip.

- The magnet closes the reed switch inside the D.E.S.S. post. It is the equivalent of a rotary mechanical ignition switch.
- The ROM chip owns a unique digital code. It is the equivalent of the tooth-pattern cut on a conventional ignition key.

The D.E.S.S. system is quite flexible. Up to 8 D.E.S.S. keys may be programmed in the memory of the ECM using the B.U.D.S. software. The keys can also be erased individually.

NOTE: If desired, a D.E.S.S. key can be used on another vehicle equipped with the D.E.S.S. It only needs to be programmed for that vehicle.

D.E.S.S. Beeper Codes

When starting the engine with a D.E.S.S. key on the post, the key is identified by the ECM and D.E.S.S. signals will be issued according to the key recognition. See table.

D.E.S.S. SIGNAL		DESCRIPTION	COMMENT
BEEPER	DISPLAYED MESSAGE (1)		
2 shorts beeps	SKI-DOO	Welcome message, good key	Working D.E.S.S. key. Vehicle can be driven. It allows engine to rev above 3000 RPM.
Slow short repetitive beeps	CHECK KEY	Unable to read key (bad connection)	Vehicle cannot be driven. Make sure the key contacts are free of dirt, snow or ice. Reinstall key and restart engine. Vehicle can not be driven.
Fast short repetitive beeps	BAD KEY	Invalid key or key not programmed	Use the proper key for this vehicle or have the key programmed. Vehicle can not be driven.
(1) Only available on premium gauge			

PROCEDURES

D.E.S.S. KEY

D.E.S.S. Key Programming

Use the latest B.U.D.S. software available from BOSSWeb.

Carry out the proper connections to use B.U.D.S. Refer to *COMMUNICATION TOOLS AND B.U.D.S. SOFTWARE*.

IMPORTANT: Ensure all connections have been made **before starting B.U.D.S.** to allow proper operation.

Start B.U.D.S. and logon.

To read the ECM, click the **Read Data** button.

www.midwestmanuals.com

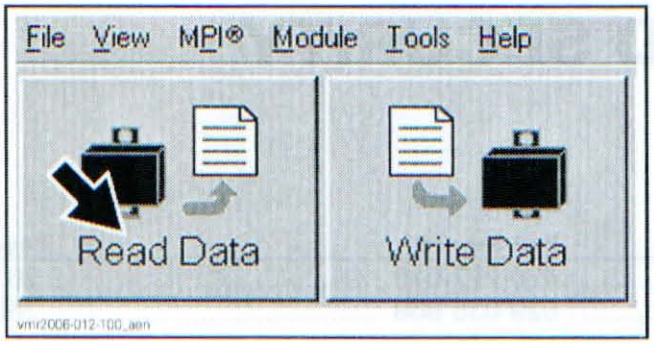

Click on **Keys** tab.

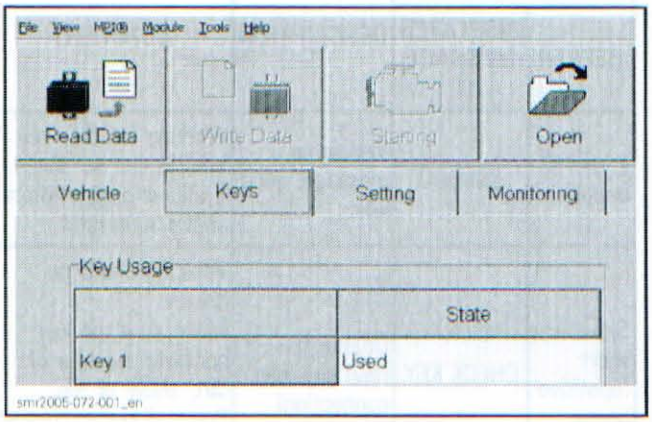

Adding a Key

1. Click on **Add Key** button at bottom of screen.

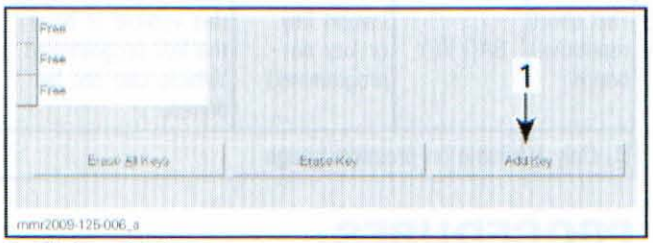

1. Click on this button

2. When the following window pops up, install the new key to be programmed on the D.E.S.S. post interface.

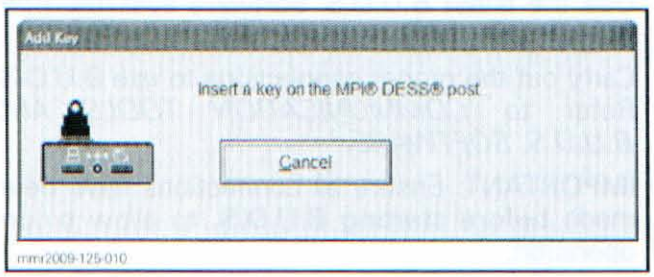



1. Key to be added
2. D.E.S.S. post interface

3. A new key is now saved in the PC computer.
4. Remove key from D.E.S.S. post interface.
5. If this is the 1st key programmed in ECM, install it on vehicle D.E.S.S. post.
6. To program any other key, click again on **Add Key** button and repeat the procedure.
7. Write the changes to the ECM. Refer to *WRITING CHANGES IN ECM* in this subsection.
8. Ensure the newly programmed key(s) work on the vehicle.

Erasing a Key

To erase one key, proceed as follows:

1. Click on **Erase Key** button at bottom of screen.



1. Click on this button

2. When the following window pops up, install the key to be erased on the D.E.S.S. post interface.

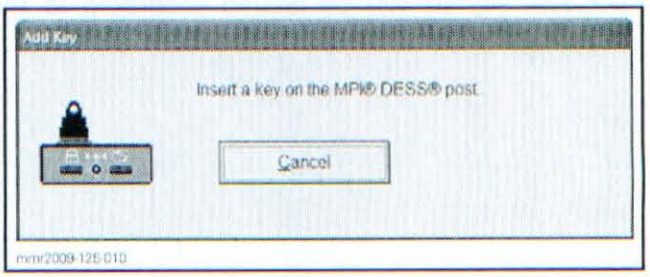

www.midwestmanuals.com



1. Key to be erased
2. D.E.S.S. post interface

3. The key is now erased in the PC computer.
4. Repeat procedure to erase other key(s).
5. Write the changes to the ECM. Refer to *WRITING CHANGES IN ECM* in this subsection.
6. Ensure the erased key(s) do not work anymore on the vehicle.

Erasing all Keys

1. Click on **Erase All Keys** button at bottom of screen.

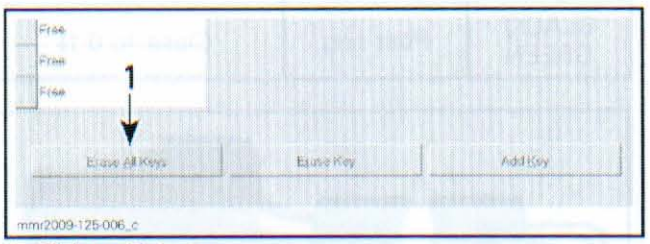

1. Click on this button

2. When done, add at least a new key to the vehicle. Refer to *ADDING A KEY* in this subsection.
3. Write the changes to the ECM. Refer to *WRITING CHANGES IN ECM* in this subsection.
4. Ensure the erased keys do not work anymore on the vehicle (if possible) and ensure the newly added key(s) work.

Writing Changes in ECM

Save the changes in the ECM by clicking the **Write Data** button.

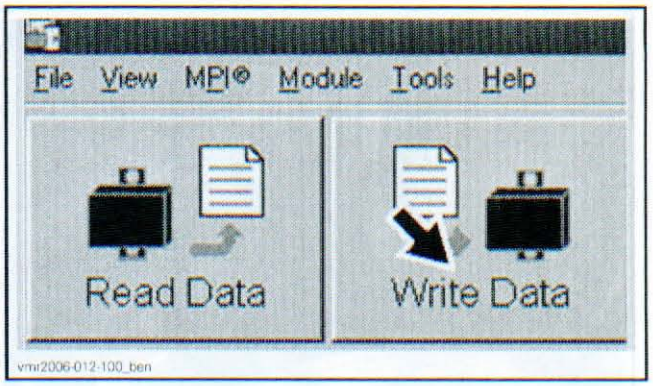

There will be an ECM Tracking box that will say "Remove key from the vehicle...".

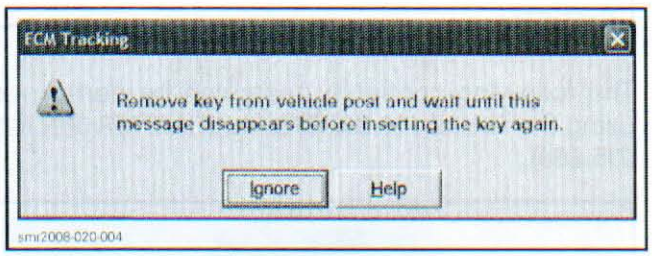

When this occurs, remove D.E.S.S. key and wait until the message disappears (it lasts approximately 20 seconds after key removal).

D.E.S.S. POST

D.E.S.S. Post Continuity Test

Remove LH side panel. Refer to *BODY*.

Disconnect intake adaptor from air intake silencer.

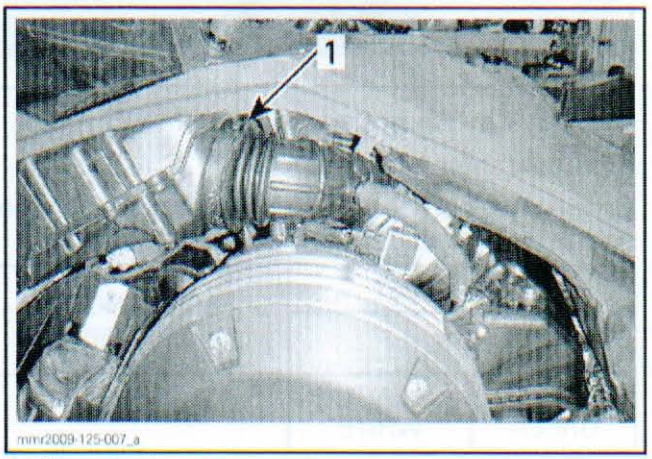

1. Disconnect here

Disconnect D.E.S.S. post connector.

www.midwestmanuals.com

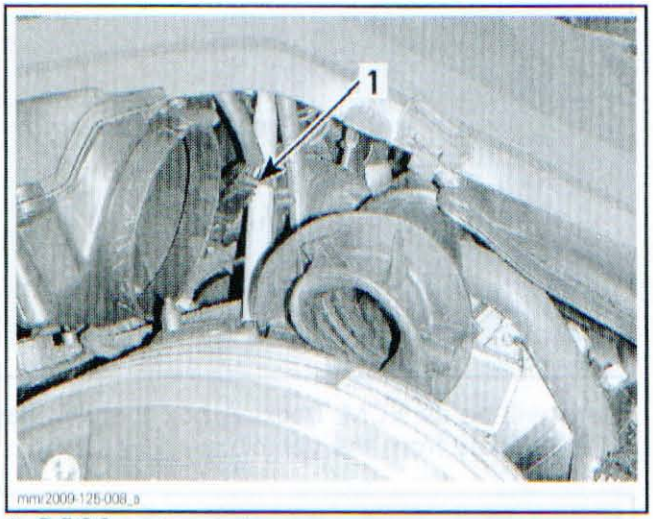

1. D.E.S.S. post connector

The following continuity tests can be performed using the FLUKE 115 DIGITAL MULTIMETER (P/N 529 035 868).



D.E.S.S. Key Removed from Post

Set multimeter to Ω.

Connect test probes to D.E.S.S. post and its connector as per tables and measure resistance.

D.E.S.S. POST		RESISTANCE Ω @ 20°C (68°F)
WIRE		
BLACK/ GREEN	BLACK/ WHITE	Open circuit

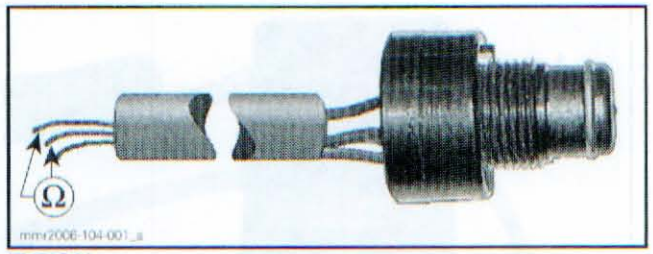

TYPICAL

D.E.S.S. POST		RESISTANCE Ω @ 20°C (68°F)
WIRE		
WHITE/ GRAY	Post terminal	Close to 0 Ω

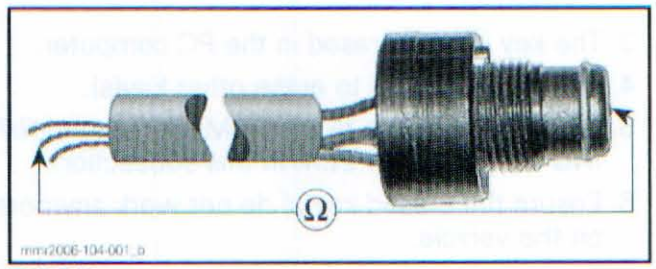

TYPICAL

D.E.S.S. POST		RESISTANCE Ω @ 20°C (68°F)
WIRE		
BLACK/ GREEN	Post ring	Close to 0 Ω

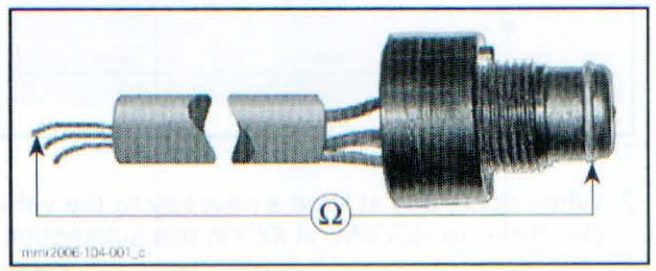

TYPICAL

D.E.S.S. Key on Post

Connect test probes to D.E.S.S. post connector as per table and measure resistance.

D.E.S.S. POST		RESISTANCE Ω @ 20°C (68°F)
WIRE		
BLACK/ GREEN	BLACK/ WHITE	Close to 0 Ω

www.midwestmanuals.com

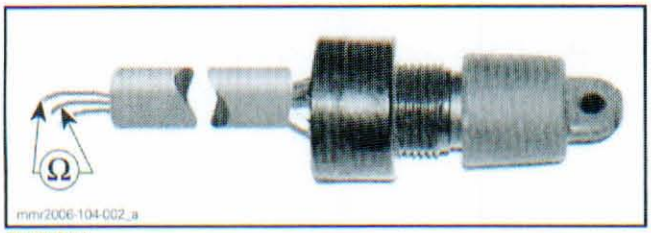

TYPICAL

If any resistance test fails, replace D.E.S.S. post.

D.E.S.S. Post Vehicle Harness Continuity Test

Remove both side panels. Refer to *BODY*.

Disconnect D.E.S.S. post connector. Refer to *D.E.S.S. POST CONTINUITY TEST* in this subsection.

Disconnect the B connector from ECM. Refer to *ELECTRONIC FUEL INJECTION* subsection.

Install the ECM ADAPTER TOOL (2 CONNECTORS) (P/N 420 277 010) on ECM connector.

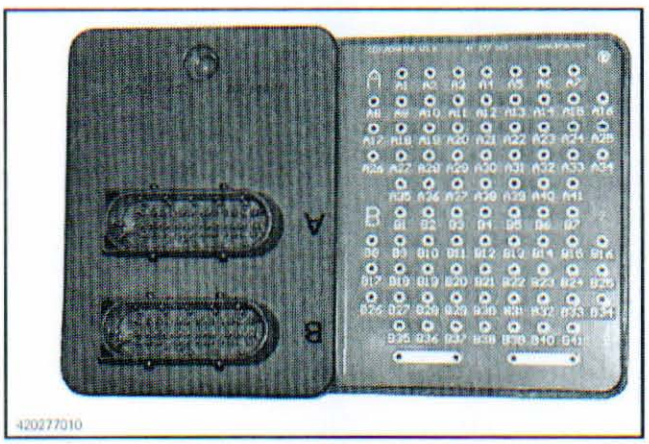

Set multimeter to Ω.

Check wire continuity between D.E.S.S. post connector of main wiring harness and ECM as follows.

D.E.S.S. POST CONNECTOR (MAIN WIRING HARNESS SIDE)	ECM ADAPTER	RESISTANCE Ω @ 20°C (68°F)
WIRE	PIN	
WHITE/GRAY	38	Close to 0 Ω
BLACK/WHITE	26	
BLACK/GREEN	39	

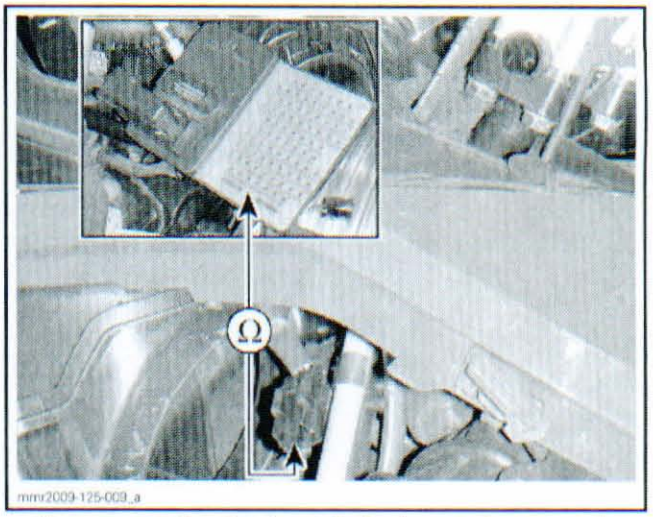

- If any continuity test failed, repair or replace wiring connectors/terminals.
- If problem persists and all tests have been performed, try a new ECM. Refer to *ECM REPLACEMENT*.

Reinstall removed parts.

BEEPER

The beeper is integrated in the multifunction gauge and cannot be replaced alone.

If the beeper does not sound when starting engine, check the beeper operation. Refer to *LIGHTS, GAUGE AND ACCESSORIES*.

www.midwestmanuals.com

www.midwestmanuals.com

LIGHTS, GAUGE AND ACCESSORIES

SERVICE TOOLS

Description	Part Number	Page
ECM ADAPTER TOOL (2 CONNECTORS)	420 277 010	266
FLUKE 115 DIGITAL MULTIMETER	529 035 868	265, 268, 271, 274, 277–278, 280, 282, 287, 290–292, 294
T-HARNESS	529 035 869	263, 265, 274, 278

SERVICE TOOLS – OTHER SUPPLIER

Description	Part Number	Page
MULTILOCK - TERMINAL EXTRACTION TOOL	755430-2	283, 289, 292–293

GENERAL

NOTE: It is a good practice to check for fault codes using B.U.D.S. software as a first troubleshooting step. Refer to *MONITORING SYSTEM/FAULT CODES* subsection.

NOTICE The main fuse should always be removed before carrying out any maintenance on the vehicle to prevent any unexpected electrical activation. Removal of this fuse isolates the battery from the vehicle electrical system, except for the starter relay input terminal.

⚠ WARNING

Torque wrench tightening specifications must be strictly adhered to. Locking devices (e.g.: locking tabs, elastic stop nuts, self-locking fasteners, cotter pins, etc.) must be replaced with new ones.

TROUBLESHOOTING

LIGHTING AND ACCESSORIES SYSTEM TESTING

The gauge is powered from relay 1 (R1). The ECM grounds relay 1 winding when start button is depressed.

Accessories and lighting are powered from relay 2 (R2). The ECM grounds relay 2 winding as soon as engine reaches 500 RPM.

The rear accessories are powered from relay 2 through the jumper installed in the fuse box.

If more than one accessory stopped working, check applicable fuse. Refer to *FUSES* in this subsection.

Refer to *WIRING DIAGRAM* for circuit details.

To energize relay 1 (R1) for testing, install the T-HARNESS (P/N 529 035 869) on the diagnostic connector. Refer to *COMMUNICATION TOOLS AND B.U.D.S. SOFTWARE* subsection for proper connection.

To test the accessories supplied by relay 2 (R2), replace relay by a suitable fused jumper between fuse box pin 1B and 3C as shown.

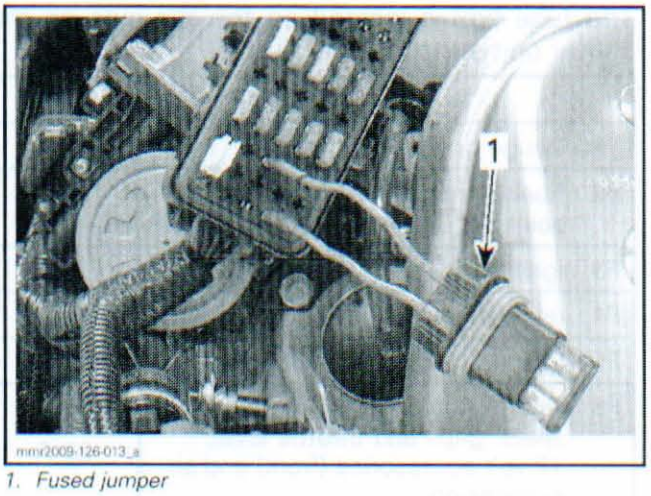

1. Fused jumper

NOTE: On models equipped with a premium gauge, heated handlebar grips and throttle lever are supplied only if the engine is running at least 2000 RPM.

PROCEDURES

FUSES

Fuse Inspection

Check if filament is melted. Replace as necessary.

www.midwestmanuals.com

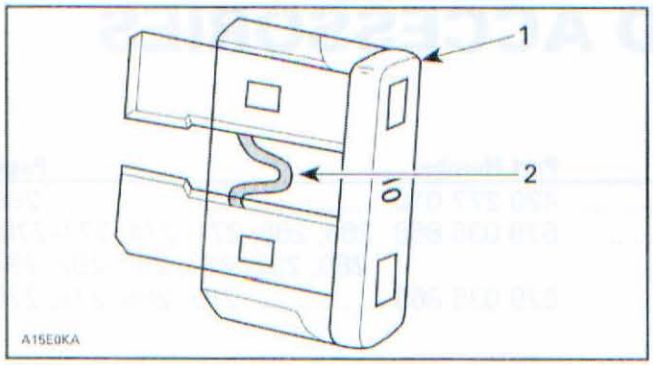

1. Fuse
2. Check if melted

NOTE: In some cases, a damaged filament can be hard to detect visually. In doubt, install fuse and measure voltage on both sides of the fuse by probing the exposed metal parts or try a known good one.

NOTICE If fuse has burnt out, the cause of the malfunction should be determined and corrected before restarting. Do not use a higher rated fuse as this can cause severe damage to electric components and/or a fire.

Fuse Location

Fuse Box

The fuse box is located on the RH side on the shifter unit support.

FUSES	
F1: Gauge power input	15 A
F2: Fuel pump, CAPS and starter solenoid	10 A
F3: Ignition coil and injector 3	5 A
F4: Ignition coil and injector 2	5 A
F5: Ignition coil and injector 1	5 A
F6: Taillight, stop light, heated seats, grips and throttle lever, 12 volt accessories (front) and air suspension	20 A
F7: Headlights	15 A
F8: Electronic reverse actuator	20 A
F9: Relays 1 and 2	5 A
F10: Rear accessories	10 A
F11: Cooling fan (option)	15 A

Main Fuse

The 30 A main fuse is installed on the battery retaining plate.

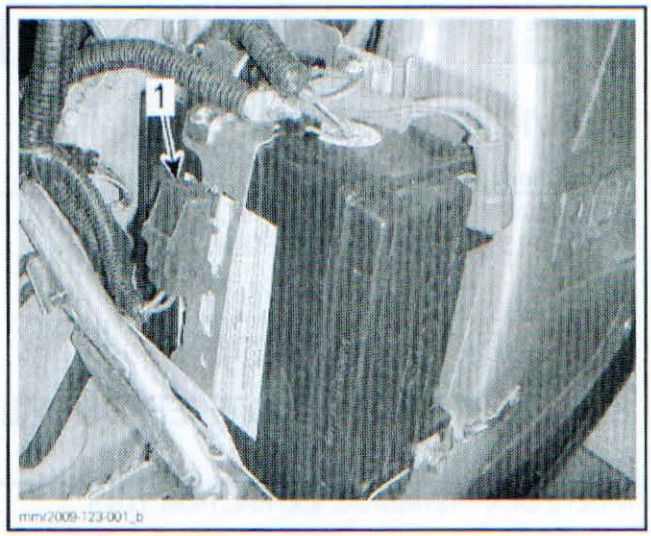

1. Main fuse

Fuel Level Sensor Fuse

The fuel level sensor circuit is protected by an in line fuse located near the sensor. It is an integral part of the wiring that comes with the sensor assembly.

NOTE: If you have a faulty fuel level indication, or a low fuel level warning light continuously ON even on a full fuel tank, test the fuse for continuity and ensure the fuse and its holder make good contact. Also check to ensure the fuse connector is properly connected.

The fuel tank has to be moved back to access the fuse. Refer to *FUEL TANK AND FUEL PUMP* for details.

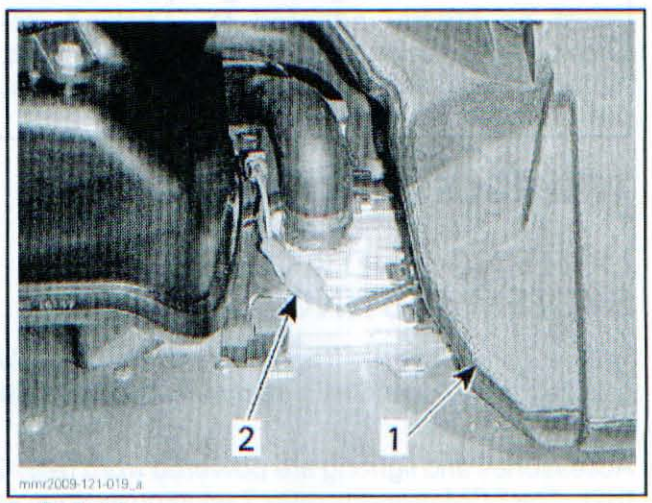

1. Fuel tank
2. In-line fuse

RELAYS

Both relays are in the fuse box.

www.midwestmanuals.com

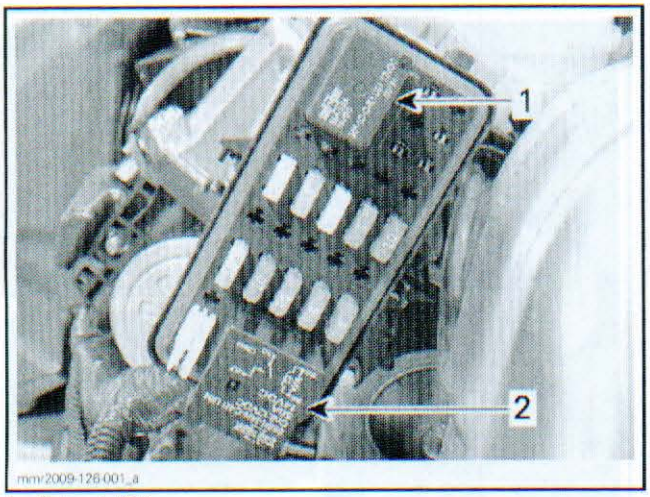

1. Relay 1 (R1)
2. Relay 2 (R2)

Relay 1 Description

Relay 1 receives power on for its winding (pin 85) from fuse F9.

Power input for the contacts (pin 30) comes from the main fuse or charging system.

The ECM pin 17 grounds R1 winding (pin 86) when start button is depressed.

Once closed, it supplies power to:

- Starter solenoid
- Engine management components
- Gauge
- Electronic Reverse module.

Relay 2 Description

Relay 2 receives power on for its winding (pin 85) from fuse F9.

Power input for the contacts (pin 30) comes from the main fuse or charging system.

The ECM pin 16 grounds R2 winding (pin 86) when engine reaches 500 RPM.

Once closed, it supplies power to the following accessories:

- Lights
- 12 volts outlet
- Heated seats
- Visor and boots outlets
- Air suspension
- Heated grips and throttle lever.

Relay Input Voltage Test

Remove relay from fuse box.

Set the FLUKE 115 DIGITAL MULTIMETER (P/N 529 035 868) to Vdc and measure voltage between fuse box terminals and ground.

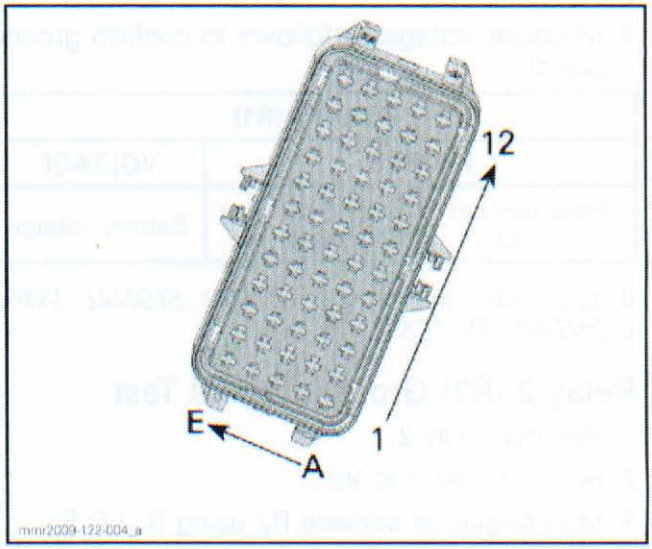

RELAY 1 (R1)		
PROBES		VOLTAGE
Winding input: Fuse box pin 10 E	Battery Ground	Battery voltage
Contact input: Fuse box pin 10 D	Battery Ground	

RELAY 2 (R2)		
PROBES		VOLTAGE
Winding input: Fuse box pin 1 C	Battery Ground	Battery voltage
Contact input: Fuse box pin 1 B	Battery Ground	

If input voltages are good, check the following:

- Relay, refer to *RELAY CONTINUITY TEST* in this subsection.
- ECM ground signal. Refer to *RELAY 1 (R1) GROUND SIGNAL TEST* or *RELAY 2 (R2) GROUND SIGNAL TEST.*
- ECM ground signal wire, refer to *GROUND WIRE CONTINUITY TEST (R1 AND R2)* in this subsection.
- Accessory supply wire for an open circuit. Refer to *WIRING DIAGRAM.*

If input voltages are not good, refer to *WIRING DIAGRAM* and check for an open circuit on the applicable relay winding supply wire.

Relay 1 (R1) Ground Signal Test

1. Remove relay 1.
2. Set multimeter to Vdc.
3. Quickly press on Start button to wake up ECM or install T-HARNESS (P/N 529 035 869) on diagnostic connector.

www.midwestmanuals.com

4. Measure voltage as follows to confirm ground signal:

RELAY1 (R1)		
PROBES		VOLTAGE
Fuse box pin 12 D	Battery positive terminal (+)	Battery voltage

If test fails, perform *GROUND SIGNAL WIRE CONTINUITY TEST.*

Relay 2 (R2) Ground Signal Test

1. Remove relay 2.
2. Set multimeter to Vdc.
3. Start engine or activate R2 using B.U.D.S.
4. Measure voltage as follows to confirm ground signal:

RELAY 2 (R2)		
PROBES		VOLTAGE
Fuse box pin 3 B	Battery positive terminal (+)	Battery voltage

If test fails, perform *GROUND SIGNAL WIRE CONTINUITY TEST.*

Ground Wire Continuity Test (R1 and R2)

1. Disconnect ECM connector B and install it on the ECM ADAPTER TOOL (2 CONNECTORS) (P/N 420 277 010). Refer to *ELECTRONIC FUEL INJECTION* section.
2. Remove applicable relay.
3. Set the multimeter to Ω.
4. Measure resistance as per the following table.

RELAY 1 (R1)		
PROBES		RESISTANCE
Fuse box pin 12 D	ECM pin B 17	Close to 0 Ω

RELAY 2 (R2)		
PROBES		RESISTANCE
Fuse box pin 3 B	ECM pin B 16	Close to 0 Ω

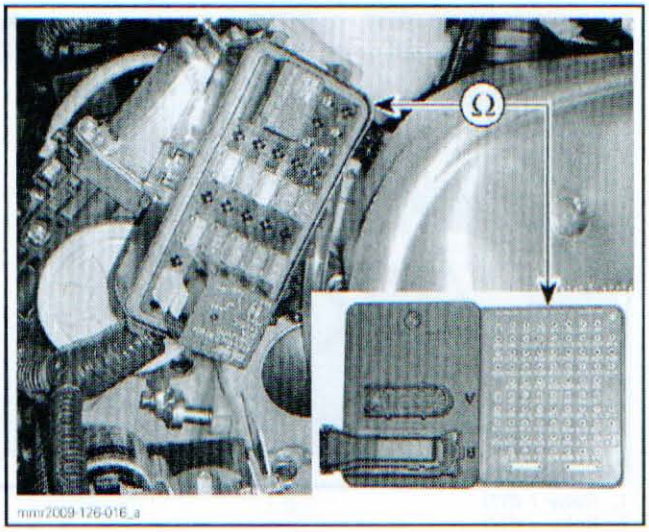

Relay Continuity Test

1. Remove relay to be tested from fuse box.
2. Set multimeter to the beeper position.

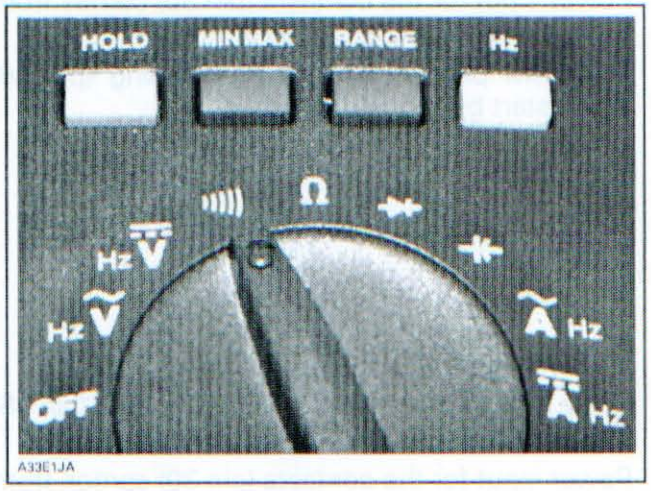

3. Apply 12 volts on terminals 85 and 86 then place the RED probe on terminal 30 and the BLACK on the terminal 87.

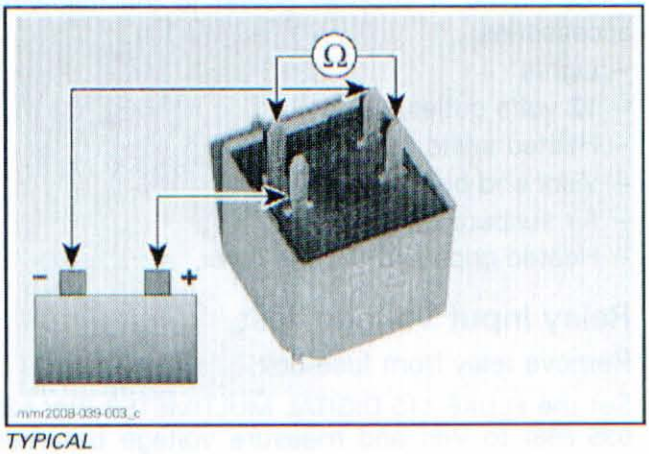

TYPICAL

www.midwestmanuals.com

The audible signal should be continuous. If not, replace the relay.

HEADLIGHTS

Headlight Bulb Removal

If a headlight bulb is burnt, proceed as follows.

1. Remove multifunction gauge, see procedure in this section.
2. Remove bulb connector.
3. Remove top and center portion of rubber boot from headlight assembly.

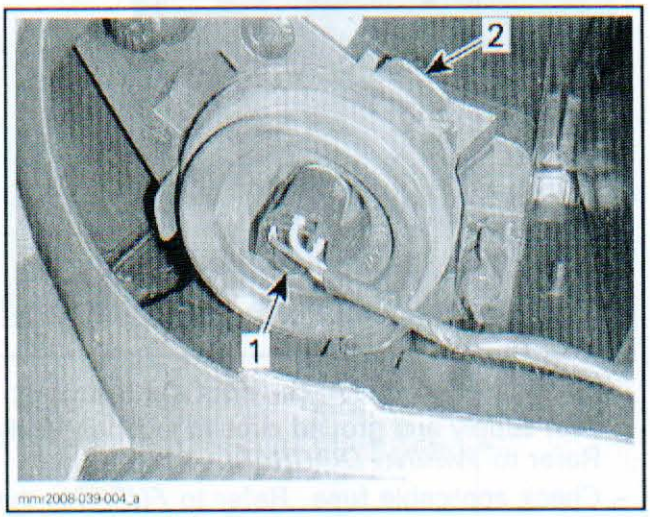

1. Remove headlight connector
2. Remove rubber boot

NOTE: It is not necessary to fully remove rubber boot.

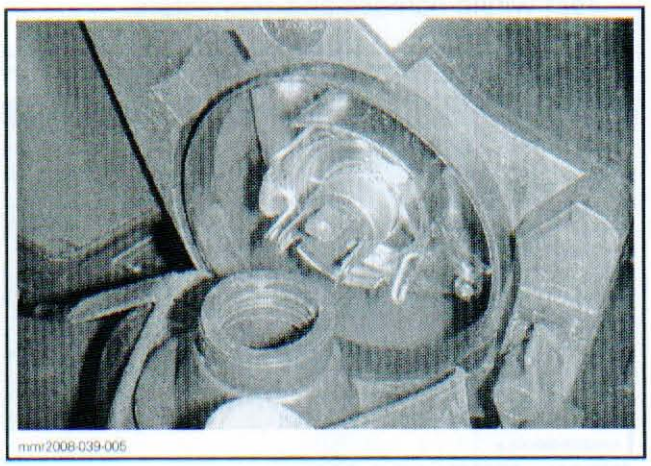

4. Press both sides of the bulb holder (spring clip) inwards at the same time, and pull it out to release it from the bulb support.

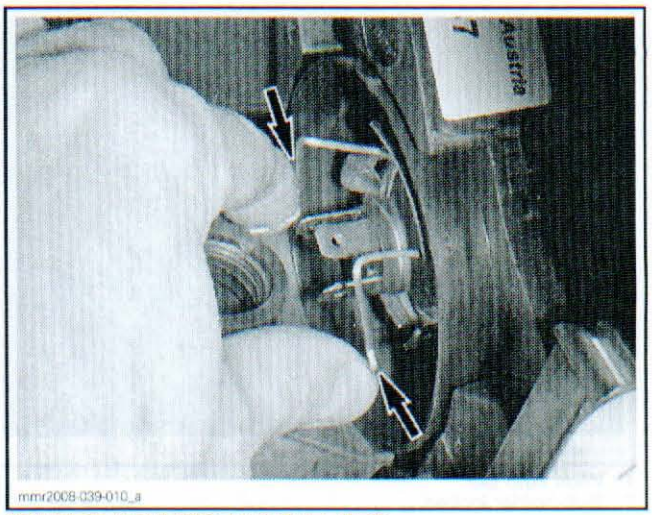

SQUEEZE INWARDS AND PULL OUT

5. Pull bulb from headlight assembly.

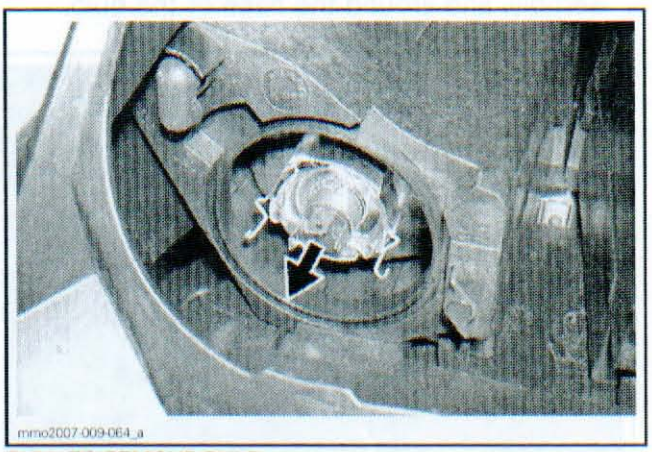

PULL TO REMOVE BULB

Headlight Bulb Installation

NOTICE **Never touch glass portion of a halogen bulb with bare fingers, it shortens its operating life. If glass is touched, clean it with isopropyl alcohol which will not leave a film on the bulb.**

1. Insert bulb in light assembly.

NOTE: Widest alignment tab on bulb should be at top of assembly.

2. Insert top of bulb holder (spring clip) as you squeeze the two sides inwards. Release bulb holder so that it locks in the grooves on either side of headlight assembly.

www.midwestmanuals.com

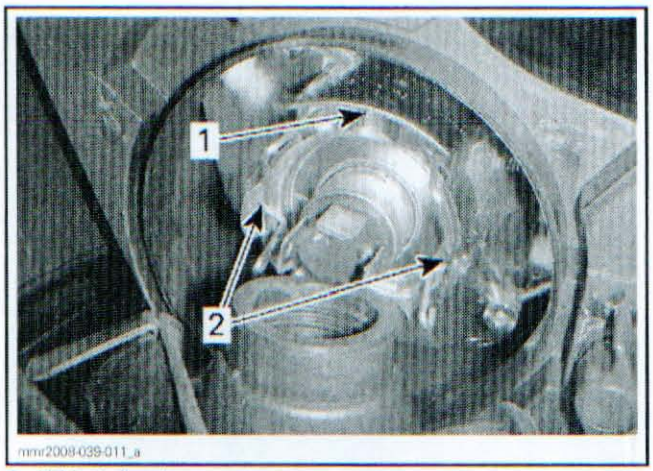

1. *Wide bulb tab*
2. *Bulb holder locked*

3. Install rubber boot. Ensure cover is properly inserted in groove provided in the headlight assembly, and around the base of the bulb.

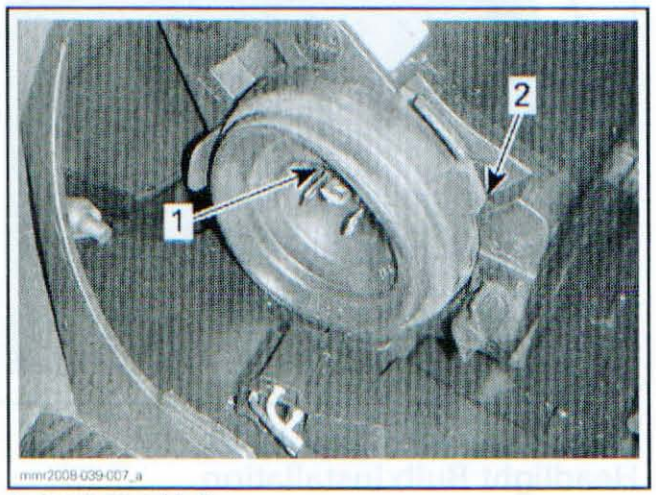

1. *Insert around bulb*
2. *Insert in groove provided*

4. Install light connector.
5. Always test light operation after bulb replacement.
6. Install gauge, see procedure in this section.

Headlight Input Voltage Test

If headlight(s) does not function with a good bulb, proceed as follows.

1. Remove multifunction gauge, see procedure in this subsection.
2. Disconnect headlight connector(s).
3. Apply electrical power to the headlights. Refer to *LIGHTING AND ACCESSORIES SYSTEM TESTING* in this section for proper procedure.
4. Set the FLUKE 115 DIGITAL MULTIMETER (P/N 529 035 868) to Vdc.
5. Read voltage at headlight connector as follows:

SWITCH POSITION	WIRE COLOR (HEADLIGHT CONNECTOR)		VOLTAGE
LO beam	GY/VI	BK	Battery voltage
HI beam	GY	BK	

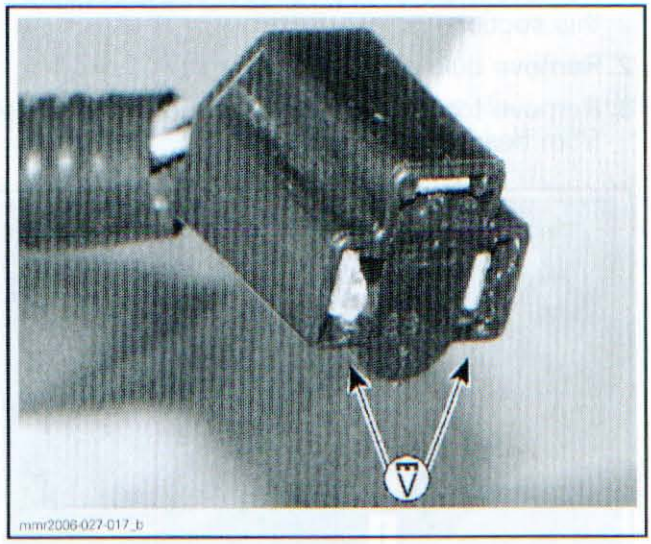

If voltage is inadequate, carry out the following:

- Test supply and ground circuits independently. Refer to *WIRING DIAGRAM*.
- Check applicable fuse. Refer to *FUSES* in this section.
- Test headlights dimmer switch from the HG connector located behind multifunction gauge. Refer to *WIRING DIAGRAM* for circuit details.
- Test wiring harness and connectors.

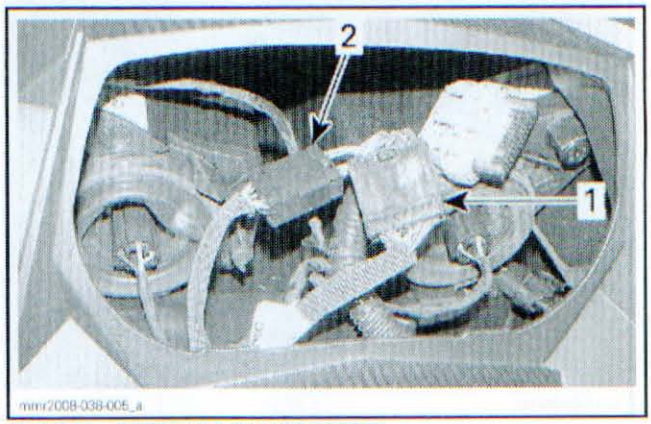

TYPICAL - PREMIUM GAUGE MODEL
1. *AC connector*
2. *HG connector*

www.midwestmanuals.com

NOTE: When testing headlights dimmer switch from HG connector, if an open circuit is found through the switch, remove the screws retaining the multifunction switch, disconnect the LA and LB connectors and test for continuity of switch and wiring separately. Dimmer switch is replaced with multifunction switch assembly.

Headlight Beam Aiming

Beam aiming is correct when center of high beam is 25 mm (1 in) below the headlight horizontal center line, scribed on a test surface, 381 cm (12 ft 6 in) away.

1. Place the vehicle on a flat surface perpendicular to test surface (wall or screen) and 381 cm (12 ft 6 in) away from it.
2. Ask rider to sit rider on, or apply equivalent weight on the vehicle.
3. Select **high** beam.
4. Measure headlight center distance from ground. Scribe a line at this height on test surface (wall or screen). Light beam center should be 25 mm (1 in) below scribed line.

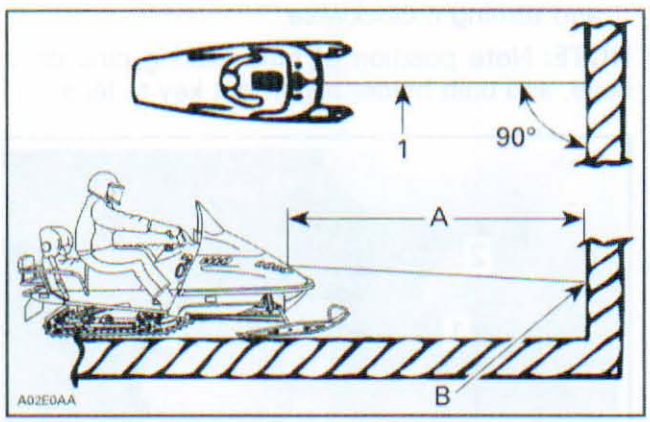

TYPICAL
1. *Headlight center line*

A. 381 cm (12 ft 6 in)
B. 25 mm (1 in) below center line

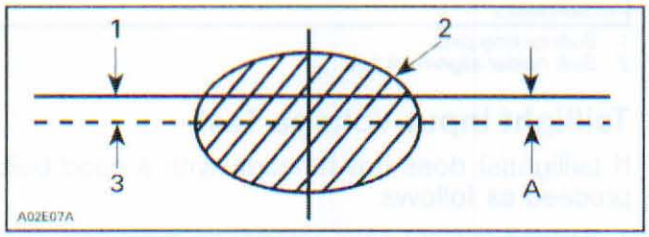

1. *Headlight horizontal*
2. *Light beam (high beam) (projected on the wall)*
3. *Light beam center*

A. 25 mm (1 in)

Beam Aiming Adjustment

1. Remove multifunction gauge.
2. Turn knob on light assembly to adjust beam height.

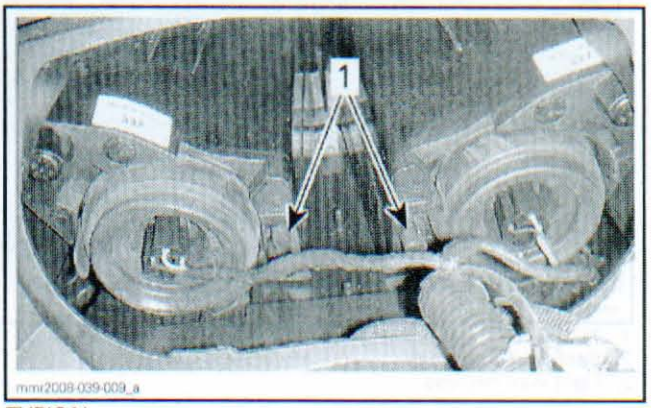

TYPICAL
1. *Beam height adjustment knobs*

TAILLIGHT AND BRAKE LIGHT

Taillight Bulb Replacement

MX Z and GSX Models

Remove taillight housing by carefully pulling on lens at both ends.

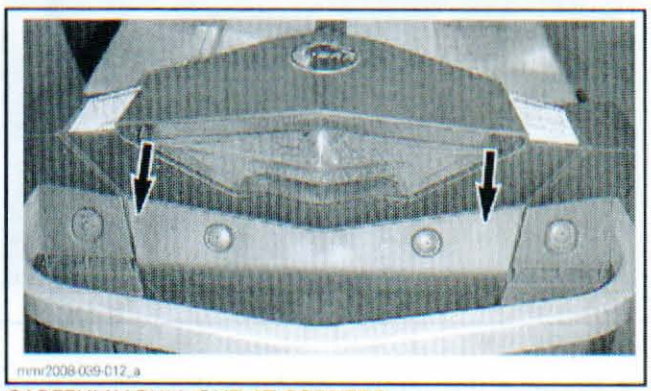

CAREFULLY PULL OUT AT CORNERS

NOTICE Taillight housing is held in place by two plastic pins inserted in rubber grommets. If housing is forced too far sideways when removing, the lens mounting pins may break and housing will have to be replaced. Do not pull housing out too far to avoid damaging wiring.

www.midwestmanuals.com

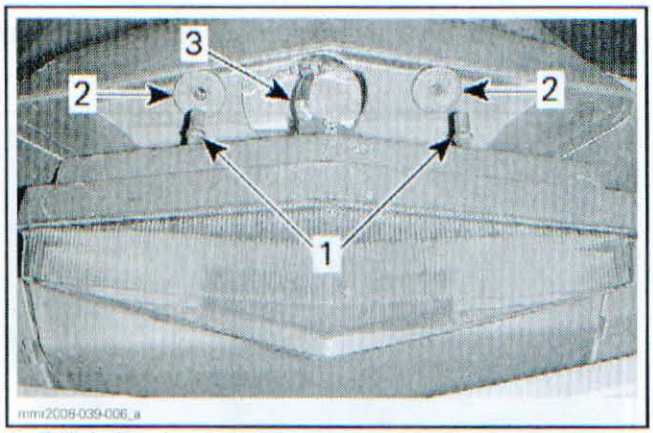

1. *Taillight housing retaining pins*
2. *Retaining grommets*
3. *Light wire harness*

GTX Models

1. Remove the taillight cover by pulling up the rear end of cover.

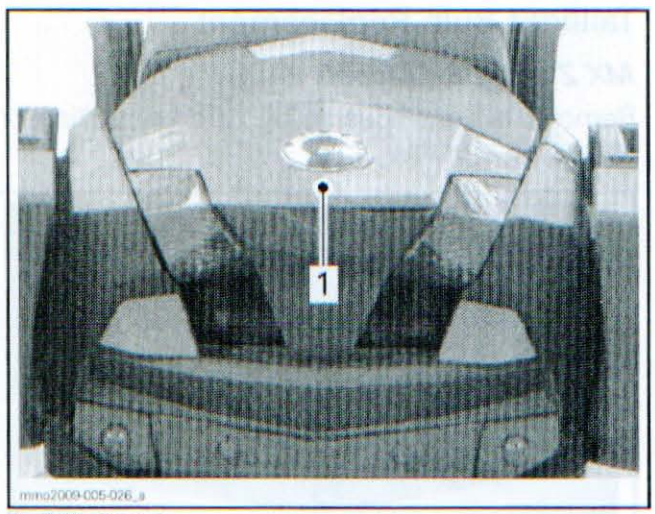

1. *Taillight cover*

2. Remove the screws retaining the taillight housing.

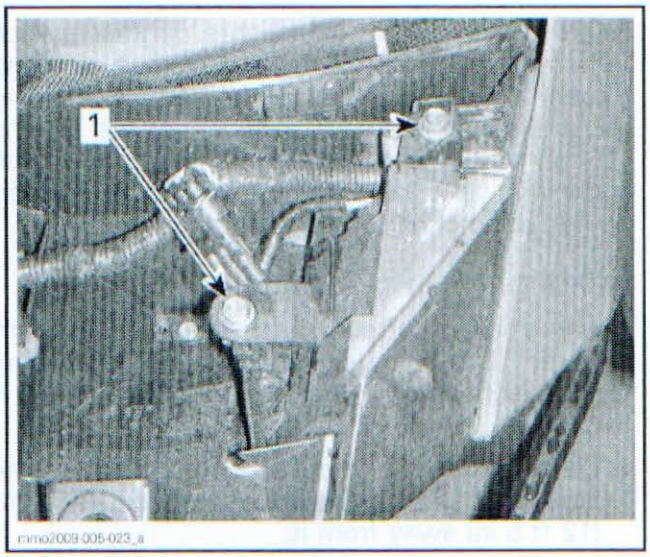

1. *Taillight housing retaining screws*

All Models

1. Rotate bulb socket counterclockwise to remove it from taillight housing.
2. Push in and rotate bulb counterclockwise to remove it from its socket.
3. Install the new bulb by pushing it in the socket and turning it clockwise.

NOTE: Note position of bulb locking pins on its base, and bulb holder alignment key to lens.

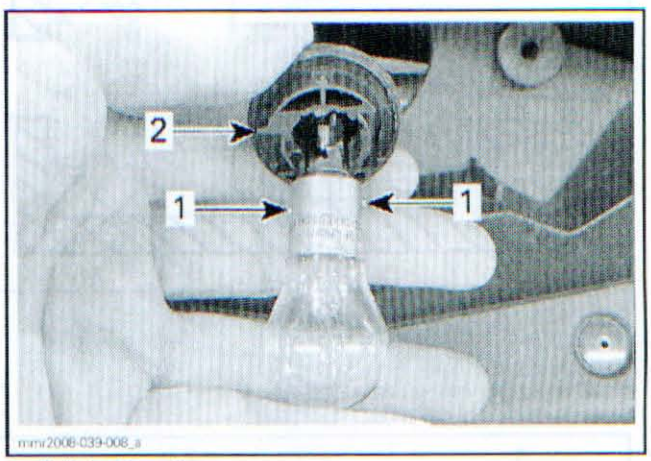

1. *Bulb locking pins*
2. *Bulb holder alignment key*

Taillight Input Voltage Test

If taillight(s) does not function with a good bulb, proceed as follows.

1. Access taillight connector(s) as explained *TAILLIGHT BULB REPLACEMENT.*
2. Disconnect connector(s).
3. Apply electrical power to the headlights. Refer to *LIGHTING AND ACCESSORIES SYSTEM TESTING* in this section for proper procedure.

www.midwestmanuals.com

4. Set FLUKE 115 DIGITAL MULTIMETER (P/N 529 035 868) to Vdc.
5. Read voltage at taillight connector(s) as follows:

PROBES		VOLTAGE
RED wire	BLACK wire	Battery voltage

Reading should be battery voltage. If no voltage is read, refer to *WIRING DIAGRAM* and check ground and supply circuits independently. Repair open circuit as needed.

Brake Light Input Voltage Test

1. If brake light(s) does not function with a good bulb, carry out steps 1 to 4 of *TAILLIGHT INPUT VOLTAGE TEST.*
2. Apply parking brake.
3. Read voltage at taillight connector(s) as follows:

PROBES		VOLTAGE
WHITE wire	BLACK wire	Battery voltage

Reading should be battery voltage. If no voltage is read, refer to *WIRING DIAGRAM* and check ground and supply circuits independently. Repair open circuit if needed. To check brake light switch, refer to *BRAKE* subsection.

Taillight Holder Replacement

If the taillight lens is broken, see the *TAILLIGHT BULB REPLACEMENT* procedure in this section.

MX Z and GSX Models

The taillight holder is part of the snow guard. If it needs to be replaced, refer to *BODY* subsection.

GTX Models

The taillight holder is part of the rear rack. If it needs to be replaced, refer to *BODY* section.

All Models

If the light bulb socket or wiring need to be replaced, you will have to lift up the rear of the fuel tank to access and disconnect the harness connector, refer to *FUEL TANK AND FUEL PUMP* section.

GAUGE

Gauge Description

Two different type of gauges which provide all indications in a single unit are used. An **analog/digital gauge (standard gauge)** and a **multifunction analog/digital gauge (premium gauge)**.

The premium gauge provides more functions and display features.

Both units can be set to indicate in metric or imperial units.

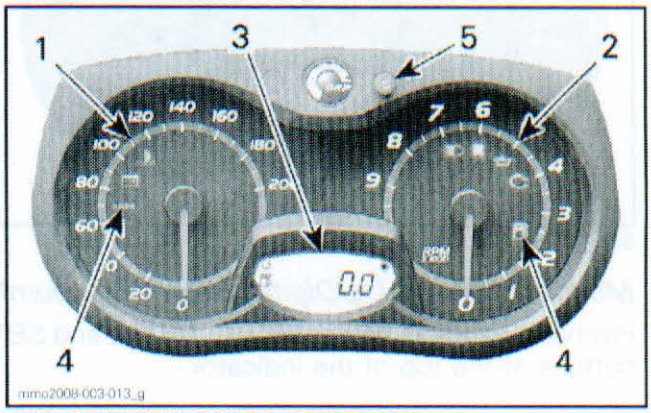

ANALOG/DIGITAL GAUGE (STANDARD)
1. *Speedometer*
2. *Tachometer (RPM)*
3. *Gauge Digital Display*
4. *Gauge Pilot Lamps*
5. *Gauge SET "S" button*

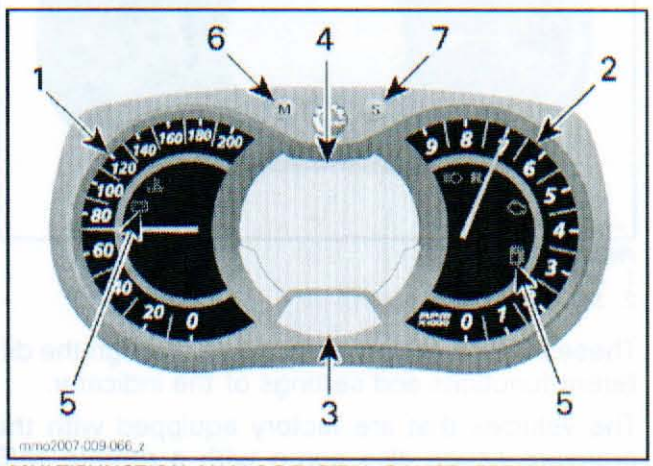

MULTIFUNCTION ANALOG/DIGITAL GAUGE (PREMIUM)
1. *Speedometer*
2. *Tachometer (RPM)*
3. *Gauge Digital Display*
4. *Gauge Multifunction Digital Display*
5. *Gauge Pilot Lamps*
6. *Gauge MODE "M" button*
7. *Gauge SET "S" button*

The premium gauge is also used to control 9 temperature settings for the heated hand grips and the heated throttle lever.

NOTE: On the premium gauge, the setups made on the multifunction digital display will not be stored in the memory unless they are performed with the engine running.

Mode and Set Buttons

Analog/Digital Gauge

The standard gauge is equipped with a SET button only.

www.midwestmanuals.com

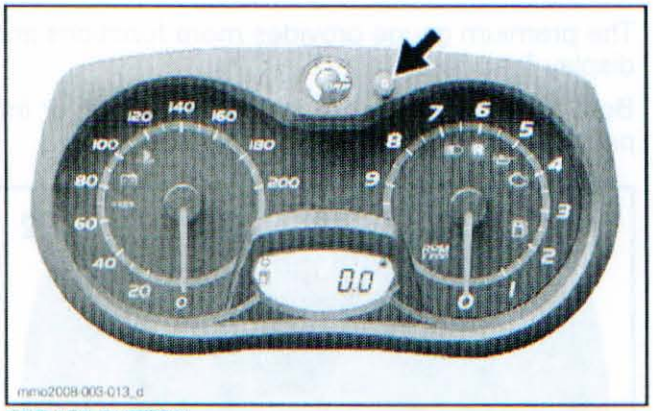

SET "S" BUTTON

Multifunction Analog/Digital Gauge (Premium)

Premium gauge is equipped with **MODE** and **SET** buttons at the top of the indicator.

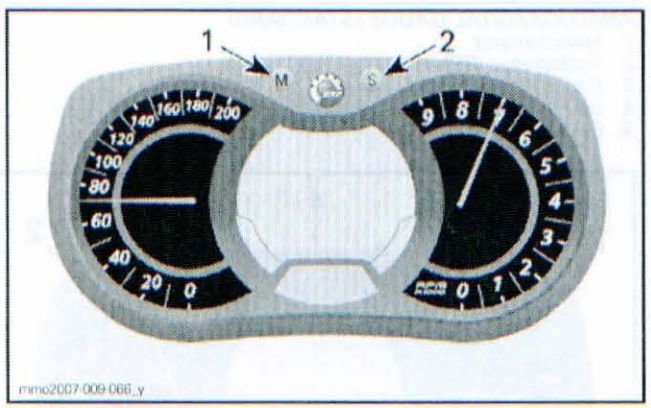

PREMIUM GAUGE
1. *MODE button*
2. *SET button*

These buttons allow you to toggle through the different functions and settings of the indicator.

The vehicles that are factory equipped with the premium gauge also come with a remote **M/S** button on the LH multifunction switch. It can be used instead of the buttons on the gauge simply by pressing the "**M**" for **MODE** and "**S**" for **SET**.

Clock Activation (Premium Gauge)

The gauge has an internal clock that can display the time of day in the lower digital display (when selected). This clock requires power from the vehicle battery to maintain the proper time of day.

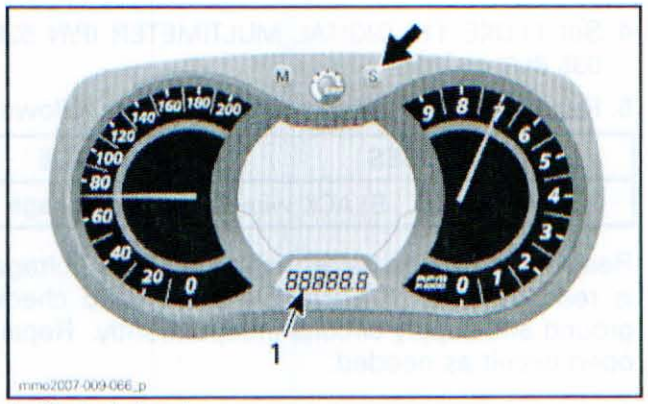

1. *Clock displayed*

Without battery power, this clock resets every time the vehicle is shut down, then restarted. It is then only used as a timer.

1. To activate the clock function in B.U.D.S., choose the **Setting** tab.

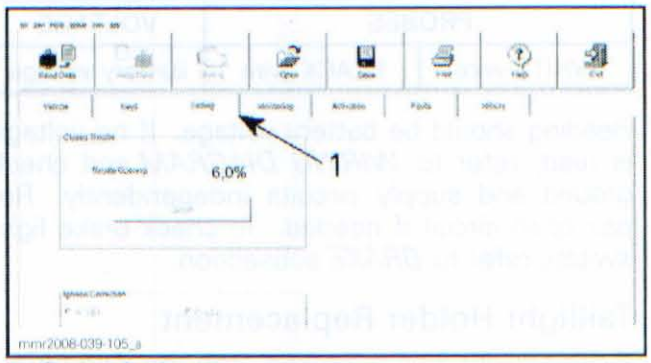

1. *Choose Setting tab*

2. At the bottom LH corner of the **Setting** page, choose the **Cluster** tab.

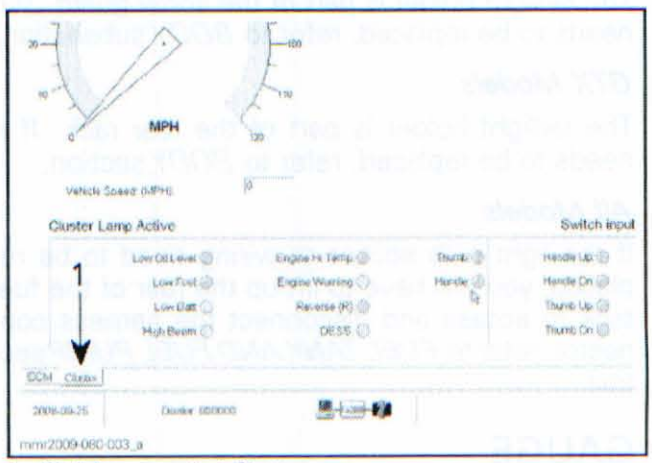

1. *Click here to select Cluster page*

3. At the bottom of the **Cluster** page, choose **Installed** in the **Real time clock** field if the vehicle is equipped with a battery. Choose **Not Installed** if the vehicle does not have a battery.

www.midwestmanuals.com

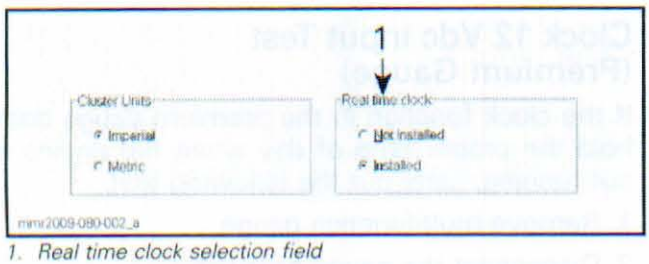

1. Real time clock selection field

Changing Gauge Units

The gauges are factory preset to indicate in imperial units and can be changed using the B.U.D.S. software.

1. To change the gauge units of measurement in B.U.D.S., first choose the **Setting** tab.
2. At the bottom LH corner of the **Setting** page, choose the **Cluster** tab.

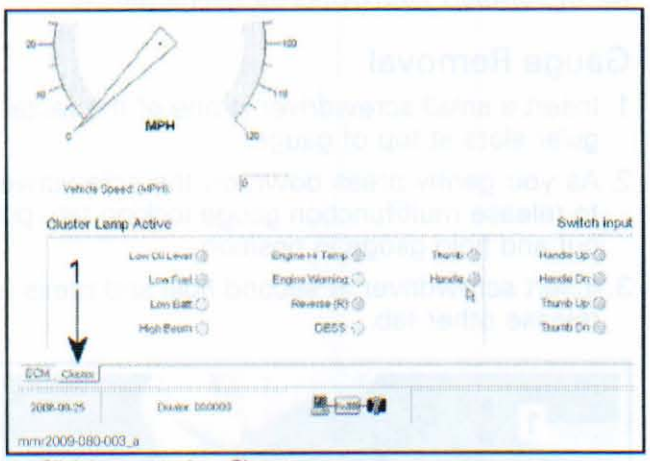

1. Click here to select Cluster page

3. At the bottom of the **Cluster** page, select **Imperial** or **Metric** in the **Cluster Units** field.



1. Cluster Units field

NOTE: Speedometer, odometer and trip meter will have their units (kilometer or miles) changed all together.

Displaying "P" Codes (Premium Gauge Only)

1. To activate **P CODE** mode, push and hold the "M" button for 2 seconds.
2. As you hold the "**M**" button, quickly turn ON and OFF the high beams a few times. The gauge should enter **P CODE** mode.
3. While in **P CODE** mode, use the "**M**" or "**S**" button to scroll over available failure codes.
4. Push and hold the "**M**" button to exit **P CODE** mode.

A **NO ACTIVE P CODE** message is displayed if there are no **P CODES** in memory.

Gauge Self-Test

On **ECM wake-up**, the gauge will perform a self-test. All indications will come ON. You will have a few seconds to ensure the indications (**LEDs** and **LCDs**) are functioning correctly.

Gauge Test with B.U.D.S.

1. In B.U.D.S., choose the **Activation** tab.

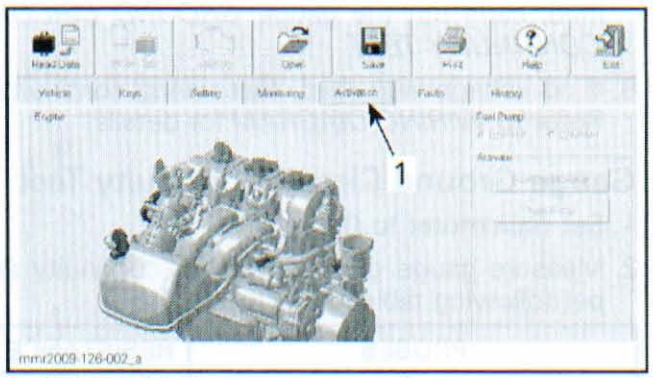

1. Activation tab

2. On the bottom of the activation page on the left side, select **Cluster**.
3. On **Cluster** page, select the **WOW Test** button. All indications will come ON and stay ON allowing the time required to verify each indication.

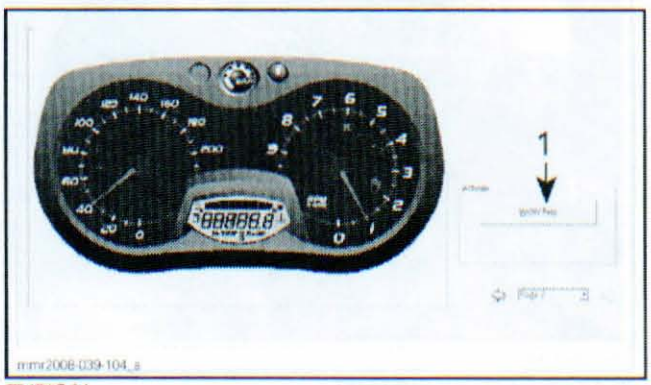

TYPICAL
1. Select WOW Test button

NOTE: The **WOW Test** only test the gauges **LEDs** and **LCDs**. It does not test the actual circuit functions related to each indication.

www.midwestmanuals.com

Gauge Power Input Test (Main 12 Vdc)

If the gauge does not come on when the engine is started, carry out the following test.

1. Check fuse 1.
2. Remove multifunction gauge.
3. Disconnect the gauge connector.
4. Set the FLUKE 115 DIGITAL MULTIMETER (P/N 529 035 868) to Vdc.
5. Press on start button or install T-HARNESS (P/N 529 035 869) on diagnostic connector.
6. Measure voltage as per following table.

PROBES		VOLTAGE
Gauge connector pin 8 (RD/GY)	Battery ground	Battery voltage

7. If gauge main power input test was as specified, carry out the gauge *GROUND CIRCUIT CONTINUITY TEST.*
8. If no voltage was read, test wiring continuity. Refer to *WIRING DIAGRAM* for details.

Gauge Ground Circuit Continuity Test

1. Set multimeter to Ω.
2. Measure gauge ground wire for continuity as per following table.

PROBES		RESISTANCE
Gauge connector pin 11 (BK)	Battery ground	Close to 0 Ω

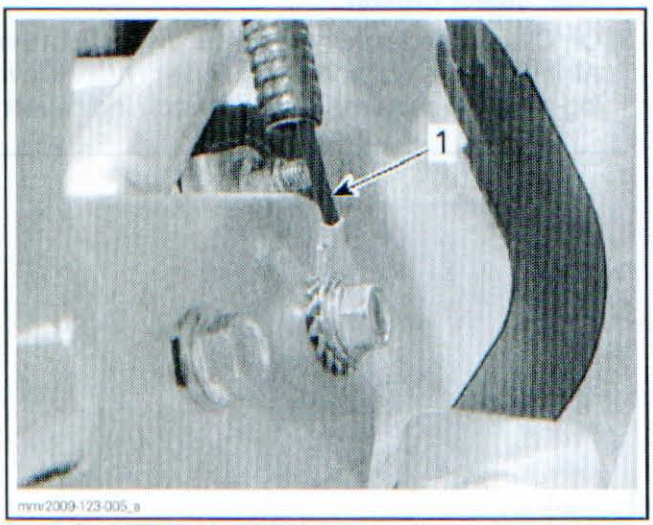

REAR OF BATTERY SUPPORT
1. Chassis ground

If gauge power input test and ground circuit continuity tests are good, replace gauge.

Clock 12 Vdc Input Test (Premium Gauge)

If the clock function in the premium gauge does hold the proper time of day when the engine is not running, carry out the following test.

1. Remove multifunction gauge.
2. Disconnect the gauge connector.
3. Set multimeter to Vdc.
4. Measure voltage as per following table.

PROBES		VOLTAGE
Gauge connector pin 9 (RD/BR)	Battery ground	Battery voltage

If no voltage is read, test input wire continuity. Refer to *WIRING DIAGRAM* for circuit details.

Gauge Removal

1. Insert a small screwdriver in one of the rectangular slots at top of gauge.
2. As you gently press down on the screwdriver to release multifunction gauge locking tab, pull out and hold gauge in position.
3. Insert screwdriver in second hole and press to release other tab.

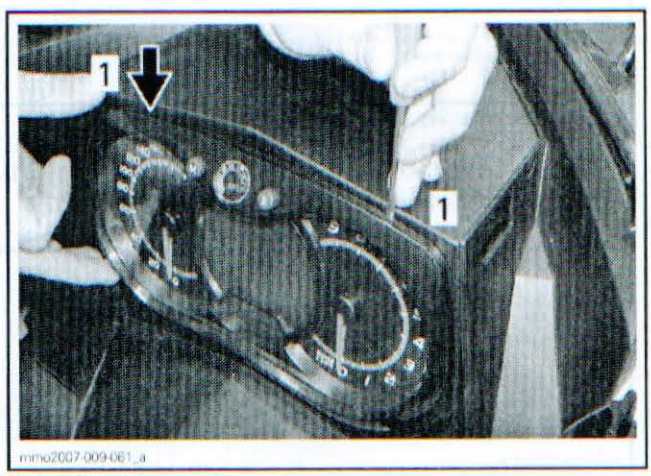

1. Locking tabs

4. Gently pull multifunction gauge from gauge support.

www.midwestmanuals.com

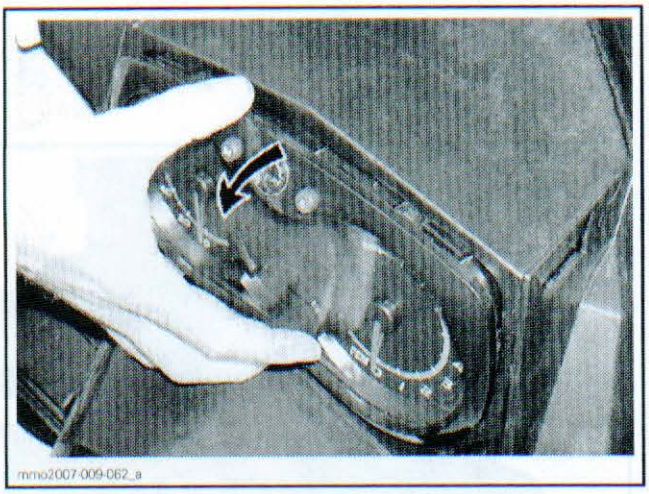

5. Press on connector locking tab and pull connector off gauge.
6. Store gauge in a secure area to prevent it from being damaged.

Gauge Installation

1. Carefully align and install gauge connector, pressing it in until connector lock engages.
2. Insert bottom of gauge in gauge holder.
3. Press top of gauge in holder until you feel locking tabs engage in holder.
4. Start vehicle engine and test gauge functions.

NOTE: If a new gauge is installed, refer to *GAUGE TO ECM MATCHING*.

Gauge to ECM Matching

NOTE: If the gauge is replaced, the V.I.N. (Vehicle Identification Number) and the vehicle model number must be entered in the gauge memory so they match those stored in the vehicle ECM.

If the identification numbers stored in the gauge do not match those stored in the ECM, the gauge will operate normally however the ECM will send a message to B.U.D.S. through the diagnostic connector.

1. To write the V.I.N. number and model number into the gauge, connect to the latest B.U.D.S. software applicable to the vehicle. Refer to the *COMMUNICATION TOOLS AND B.U.D.S. SOFTWARE* section.
2. Follow the instructions in the referenced section and in the software.
3. Once connected and activated, select the **Read Data** button. You will see a message similar to the following illustration.

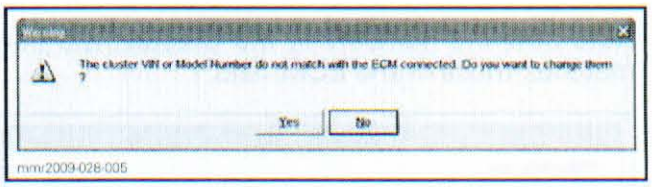

4. Select **Yes** in the displayed window.

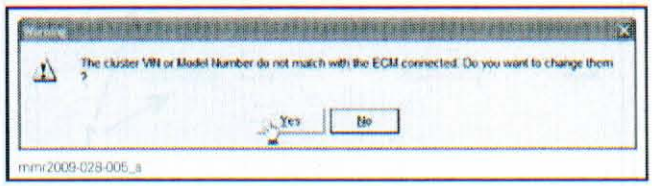

The following window illustrates that the V.I.N. number or model number in the ECM and cluster are not the same.

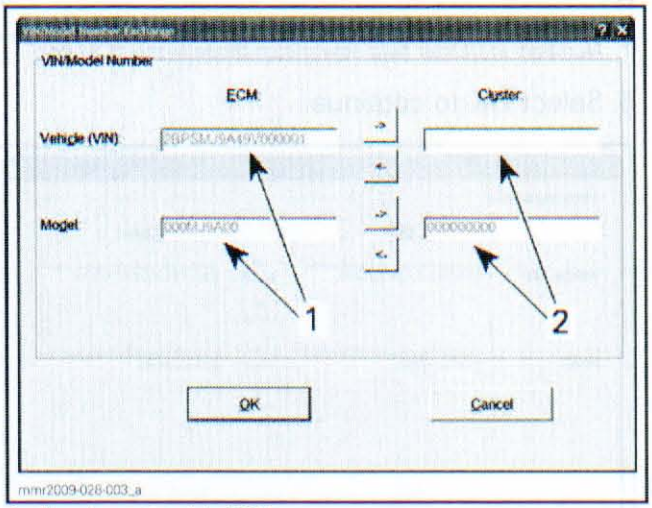

1. *Numbers stored in ECM*
2. *No numbers stored in new cluster*

5. Select each of the arrows indicated in the following illustration to copy the V.I.N. and model numbers from the ECM to the cluster.

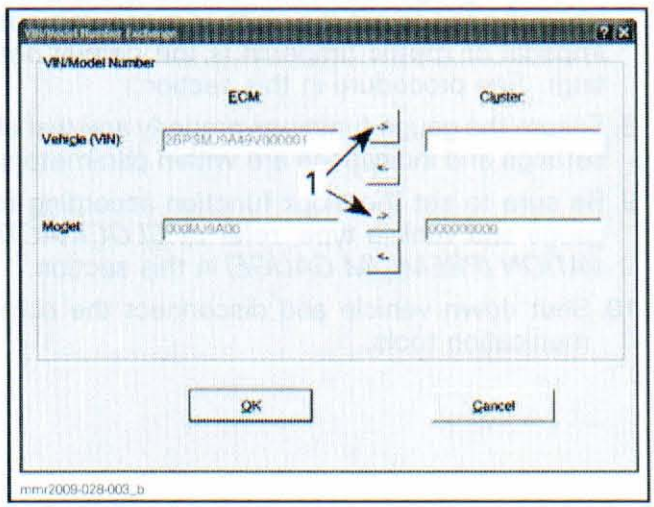

1. *Select each arrow button indicated*

www.midwestmanuals.com

Note how the numbers in the **Cluster** field now matches those in the **ECM** field.

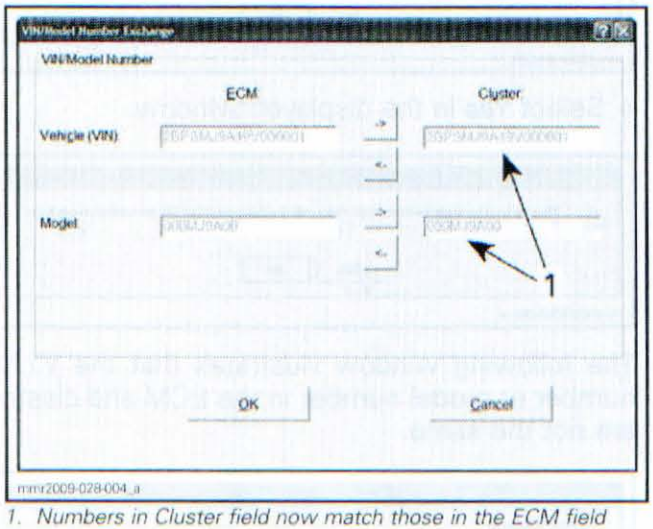

1. Numbers in Cluster field now match those in the ECM field

6. Select **OK** to continue.

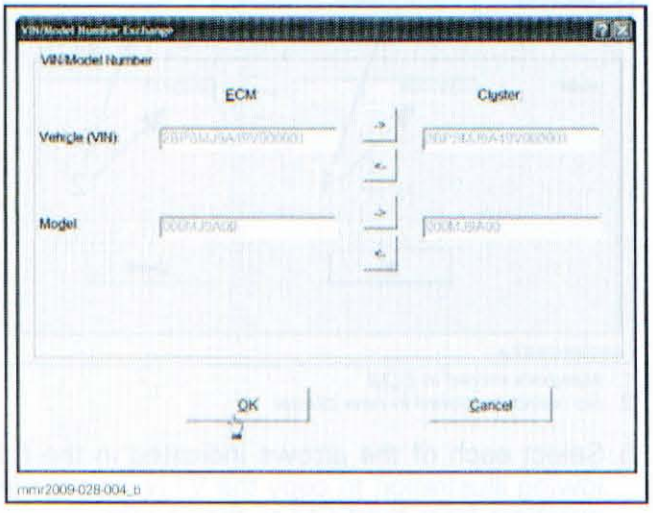

7. Once the gauge has been matched to the ECM, you will need to set the units of measurement, imperial or metric (imperial is the default setting). See procedure in this section.
8. Ensure the gauge functions properly and that all settings and indications are within parameters.
9. Be sure to set the clock function according to gauge and vehicle type, refer to *CLOCK ACTIVATION (PREMIUM GAUGE)* in this section.
10. Shut down vehicle and disconnect the communication tools.

REMOTE MODE AND SET BUTTON

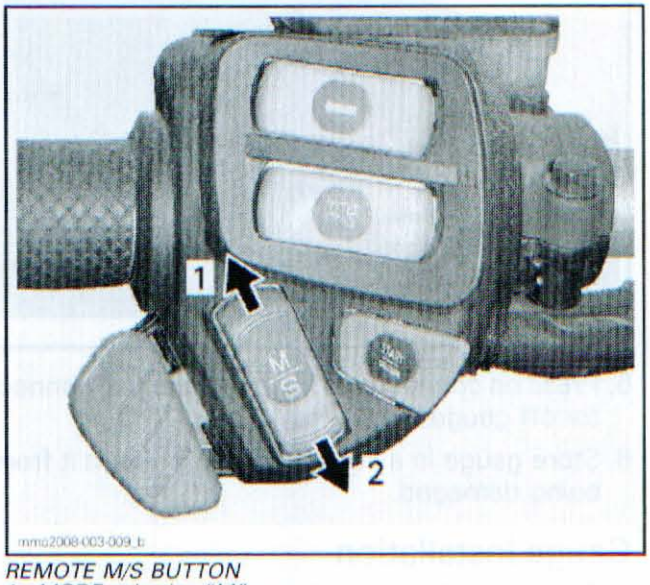

REMOTE M/S BUTTON
1. MODE selection "M"
2. SET selection "S"

Remote Button Testing with B.U.D.S.

Using the B.U.D.S. software, select the **Monitoring** tab.

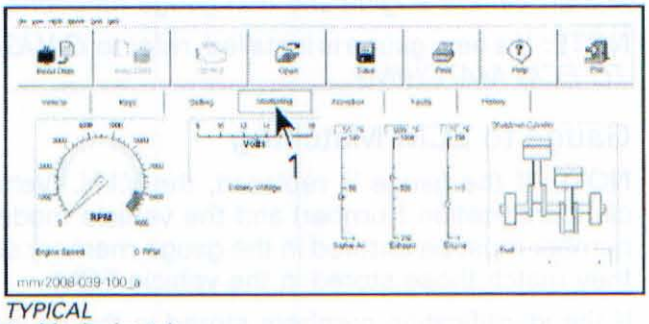

TYPICAL
1. Monitoring tab

On the lower LH side of the **Monitoring** page, choose the **Cluster** tab.

www.midwestmanuals.com

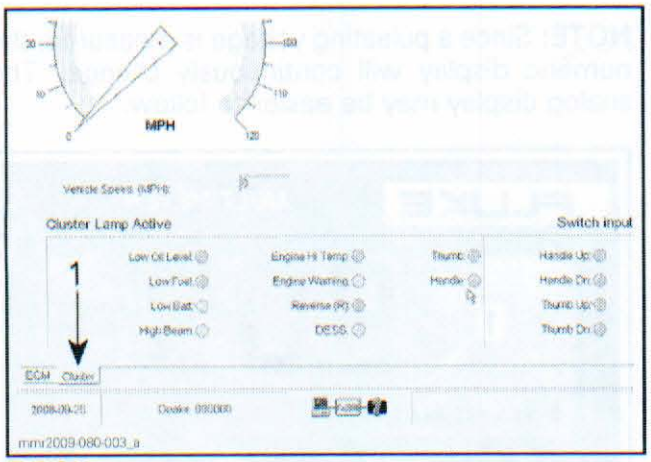

TYPICAL
1. Press here to select Cluster page

Alternately press on the "**M**" and "**S**" and look for applicable indicator light in the **Switch inputs** field to turn green.

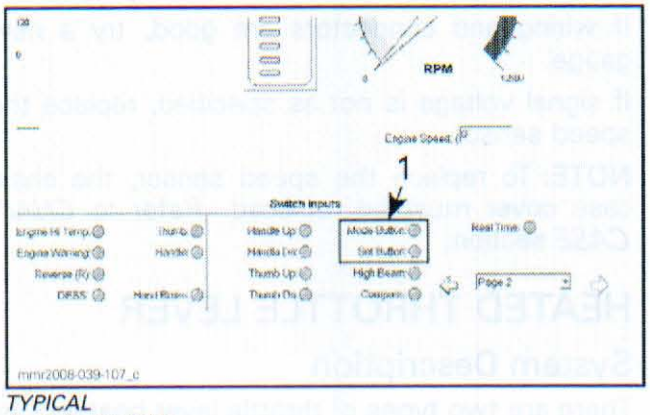

TYPICAL
1. Indicator lights

If the indicator lights come ON in B.U.D.S., the remote **M/S** button is functioning correctly.

If the indicator lights do not come ON, carry out the *REMOTE M/S BUTTON TESTING* procedure.

Remote Button Continuity Test

1. If using the **M/S** button does not affect the indication, try using the buttons on the gauge. If they function, the remote **M/S** button circuit may be open.
2. Remove the gauge.
3. Disconnect the HG and the AC connectors.

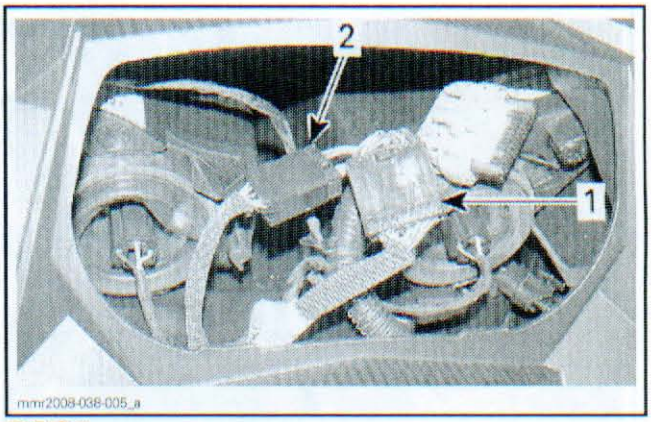

TYPICAL
1. AC connector
2. HG connector

4. Set the FLUKE 115 DIGITAL MULTIMETER (P/N 529 035 868) to Ω and carry out the following continuity test.



REMOTE M/S BUTTON TESTING			
SWITCH SELECTION	AC CONNECTOR WIRE	HG CONNECTOR WIRE	RESISTANCE
Centered	Pin 6 (YL/BR)	Pin 1 (BK/BU)	Infinite Ω
	Pin 7 (YL/GN)		
"M"	Pin 6 (YL/BR)	Pin 1 (BK/BU)	Close to 0 Ω
"S"	Pin 7 (YL/GN)		

If you do not obtain the values as specified, repair or replace switch, wiring and connections.

SPEED SENSOR

The speed sensor is mounted in the chain case cover.

Speed Sensor Static Test

1. Locate speed sensor connector.

www.midwestmanuals.com

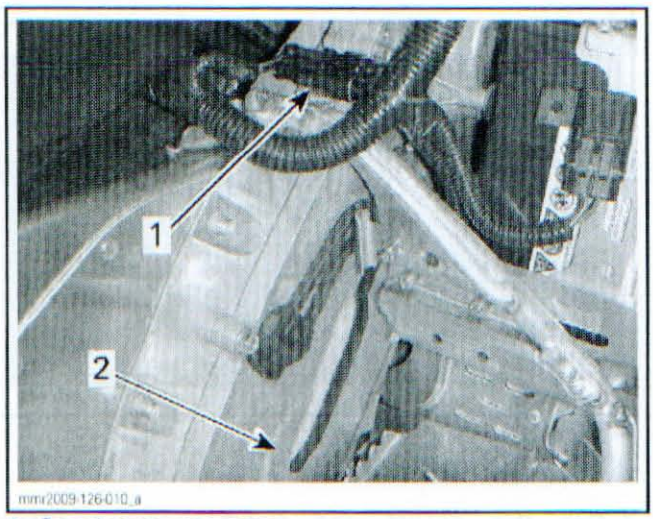

1. *Speed sensor connector*
2. *Speed sensor (inside cover)*

2. Lift and support back end of vehicle so that the track is completely off the ground.
3. Install T-HARNESS (P/N 529 035 869) on diagnostic connector.
4. To perform verifications, use the FLUKE 115 DIGITAL MULTIMETER (P/N 529 035 868) with Fluke TP88 rigid back probe pins or equivalent.
5. With multimeter set to Vdc, back-probe connector and read sensor supply voltage as follows.

SPEED SENSOR CONNECTOR (SENSOR SIDE)		VOLTAGE
RD	BK	Approximately 12 Vdc

If you do not have proper supply voltage, remove T-Harness and carry out a continuity test of wiring from sensor to gauge. Refer to *WIRING DIAGRAM* for circuit detail.

If supply voltage is good, measure the signal voltage as follows.

6. Back-probe connector between GREEN and BLACK wires, read voltage.
7. Rotate driven pulley by hand while watching multimeter display.

ROTATE TRACK	SPEED SENSOR CONNECTOR (SENSOR SIDE)		VOLTAGE
	GN	BK	Alternate 12 Vdc and 0 Vdc

The signal voltage should alternate between approximately 12 Vdc and 0 Vdc.

NOTE: Since a pulsating voltage is measured, the numeric display will continuously change. The analog display may be easier to follow.

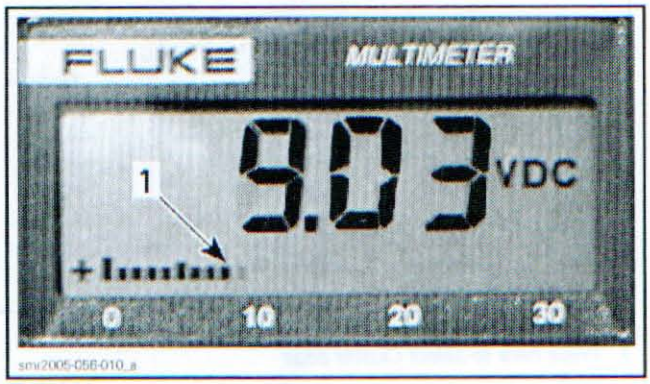

TYPICAL
1. *Analog display*

If voltage is as specified, repair or replace wiring and connectors between sensor and gauge.

If wiring and connectors are good, try a new gauge.

If signal voltage is not as specified, replace the speed sensor.

NOTE: To replace the speed sensor, the chain case cover must be replaced. Refer to *CHAIN CASE* section.

HEATED THROTTLE LEVER

System Description

There are two types of throttle lever heating systems used on the REV-XR platform.

The type of system used is determined by the gauge package installed at the factory, standard gauge or premium gauge.

Models with Standard Gauge

On vehicles equipped with a "Standard" gauge, the throttle lever heater is controlled by a toggle switch on the LH multifunction switch assembly.

The switch allows you to select **High**, center (**Off**), and **Low** heat settings. The switch button will remain in the selected position until another selection is made.

www.midwestmanuals.com

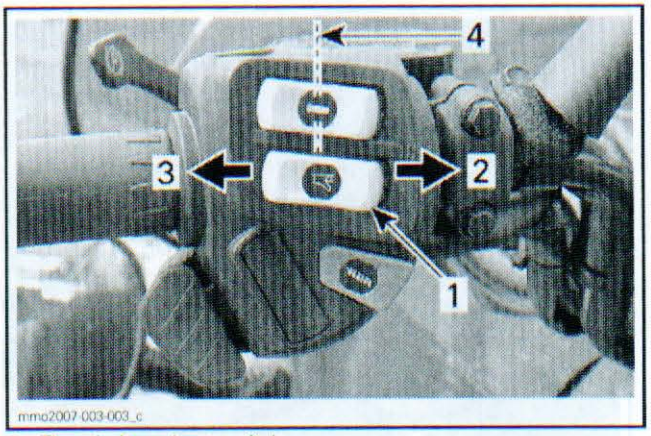

1. *Throttle lever heat switch*
2. *High*
3. *Low*
4. *Heat OFF (center position)*

Models with Premium Gauge

On vehicles factory equipped with a "Premium" gauge, the throttle lever heat is controlled through the gauge.

The heated throttle lever will not be powered until the engine runs at least 2000 RPM.

A three position switch on the LH multifunction switch assembly allows selection of 9 heat levels, which are displayed in the indicator.

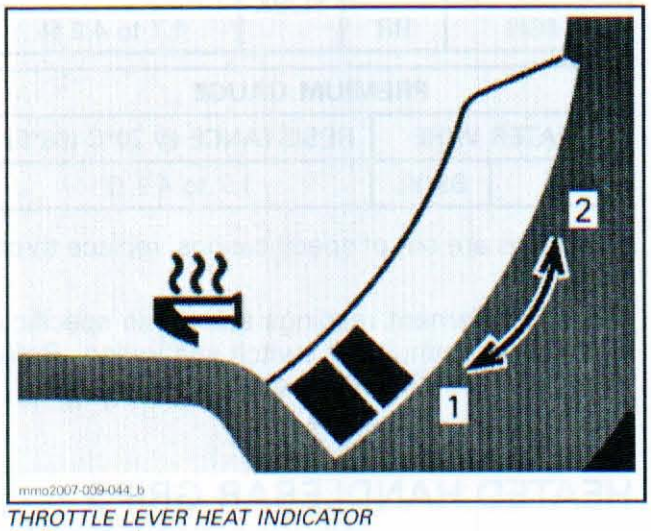

THROTTLE LEVER HEAT INDICATOR
1. *Decrease heat*
2. *Increase heat*

The switch selection sends a signal to the premium gauge to increase or decrease heat.

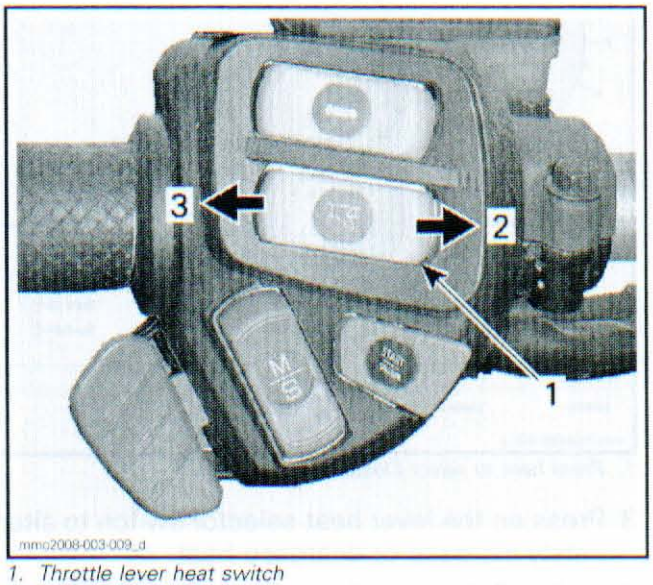

1. *Throttle lever heat switch*
2. *Increase heat*
3. *Decrease heat*

The gauge then applies the appropriate amount of current to the heater according to the selection.

To turn OFF the heaters, select heat down until there is no more indication on the bar graph.

When released, the switch springs back to the center neutral position.

Heat Selector Switch Testing with B.U.D.S. (Premium gauge)

1. Using the B.U.D.S. software, select the **Monitoring** tab.

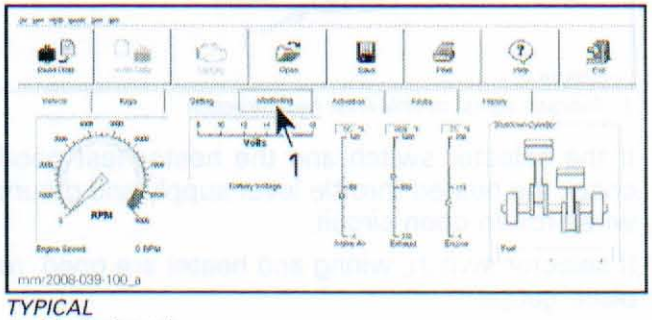

TYPICAL
1. *Monitoring tab*

2. On the lower LH side of the **Monitoring** page, choose the **Cluster** tab.

www.midwestmanuals.com

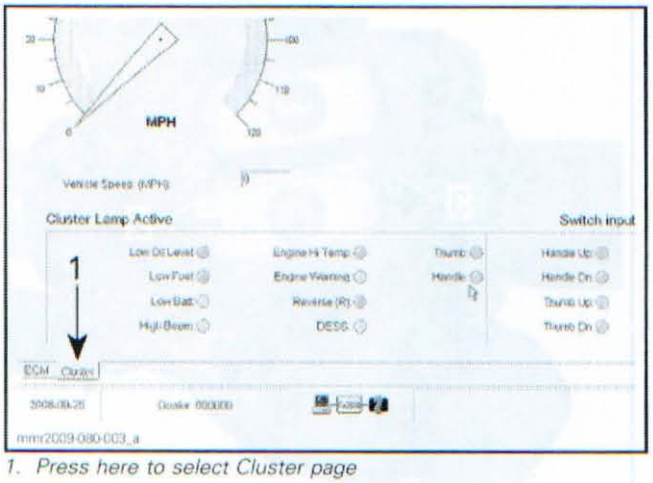

1. Press here to select Cluster page

3. Press on the lever heat selector switch to alternately increase or decrease heat.
4. In B.U.D.S., look for the applicable indicator light in the **Switch inputs** field to turn GREEN (**Thumb Up** or **Thumb Dn**). If they do, the heat selector switch for the throttle lever is functioning correctly.

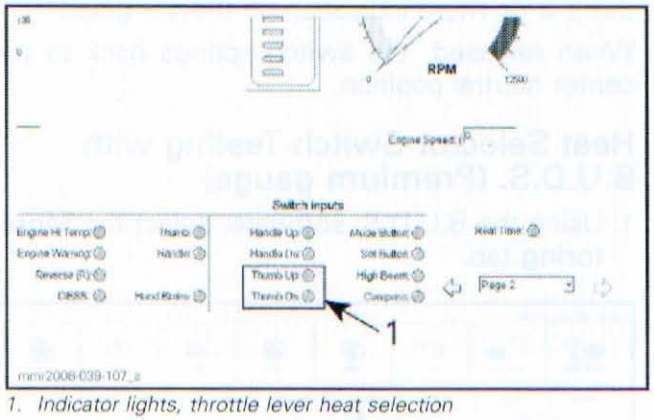

1. Indicator lights, throttle lever heat selection

If the selector switch and the heater test good, check the heated throttle lever supply and ground wires for an open circuit.

If selector switch, wiring and heater are good, replace gauge.

Lever Heating Element Testing

1. Disconnect the RH steering connectors located under the steering cover.

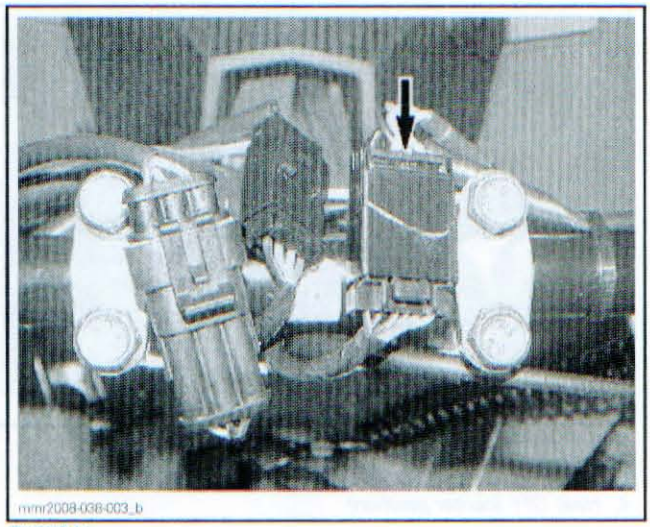

TYPICAL

2. Set the FLUKE 115 DIGITAL MULTIMETER (P/N 529 035 868) to Ω.
3. Carry out a resistance check of the heating elements as follows.

STANDARD GAUGE			
INTENSITY	HEATER WIRE		RESISTANCE @ 20°C (68°F)
LOW	BR/YL	YL/BK	5.7 to 18.5 Ω
HIGH	BR		1.7 to 4.2 Ω

PREMIUM GAUGE		
HEATER WIRE		RESISTANCE @ 20°C (68°F)
BR	BK/YL	1.7 to 4.2 Ω

If readings are out of specifications, replace throttle lever.

If heating element readings are within specifications, test continuity of switch and wiring. Refer to *WIRING DIAGRAM* for details.

4. Reconnect connectors.

HEATED HANDLEBAR GRIPS

System Description

There are two types of grip heating systems used on the REV-XR platform.

The type of system used is determined by the gauge package installed at the factory, standard gauge or premium gauge.

Models with Standard Gauge

On vehicles equipped with a "Standard" gauge, the grip heater is controlled by a toggle switch on the LH multifunction switch assembly.

www.midwestmanuals.com

The switch allows you to select **High**, center (**Off**), and **Low** heat settings. The switch button will remain in the selected position until another selection is made.

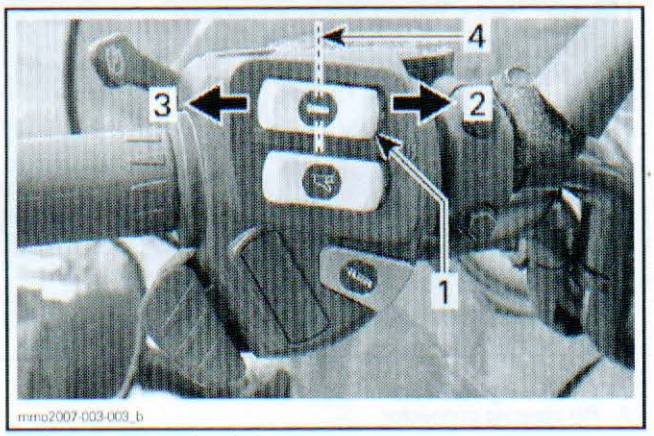

1. *Grip heat control switch*
2. *High*
3. *Low*
4. *Heat OFF (center position)*

Models with Premium Gauge

On vehicles factory equipped with a "Premium" gauge, the grip heat is controlled through the gauge.

The heated hand grips will not be powered until the engine runs at 2000 RPM or above.

A three position switch on the LH multifunction switch assembly allows selection of 9 heat levels, which are displayed in the indicator.

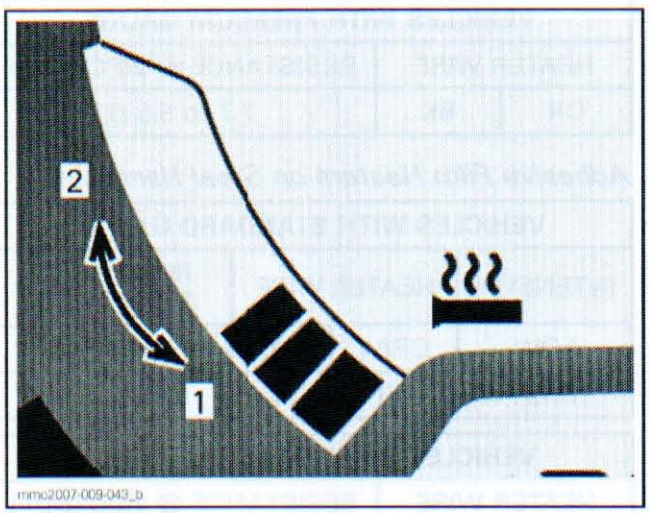

1. *Decrease heat*
2. *Increase heat*

The switch selection sends a signal to the premium gauge to increase or decrease heat.

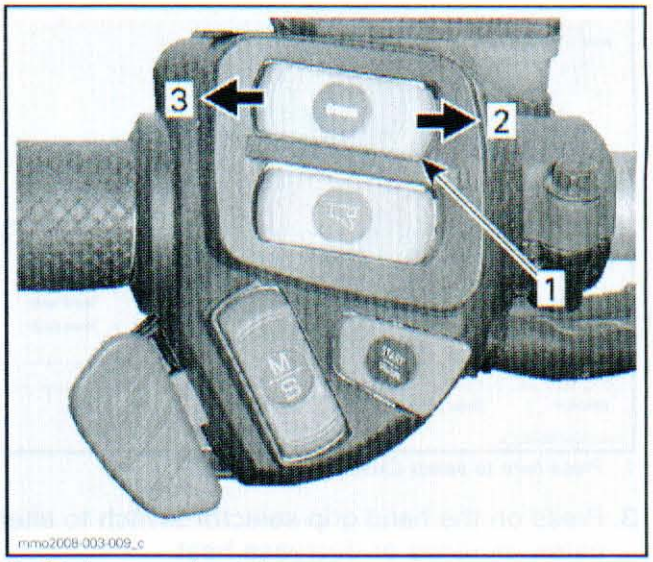

1. *Grip heat control switch*
2. *Increase heat*
3. *Decrease heat*

The gauge then applies the appropriate amount of current to the heater according to the selection.

To turn OFF the heaters, select heat down until there is no more indication on the bar graph.

When released, the switch springs back to the center neutral position.

Heat Selector Switch Testing with B.U.D.S. (Premium Gauge)

1. Using the B.U.D.S. software, select the **Monitoring** tab.

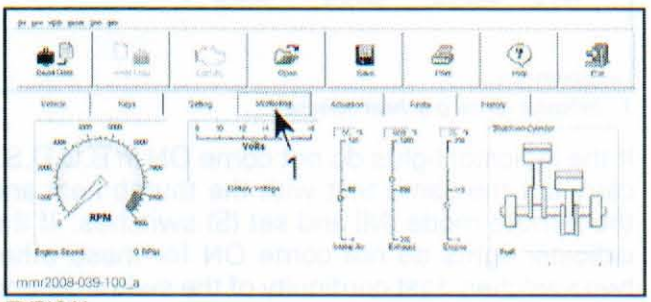

TYPICAL
1. *Monitoring tab*

2. On the lower LH side of the **Monitoring** page, choose the **Cluster** tab.

www.midwestmanuals.com

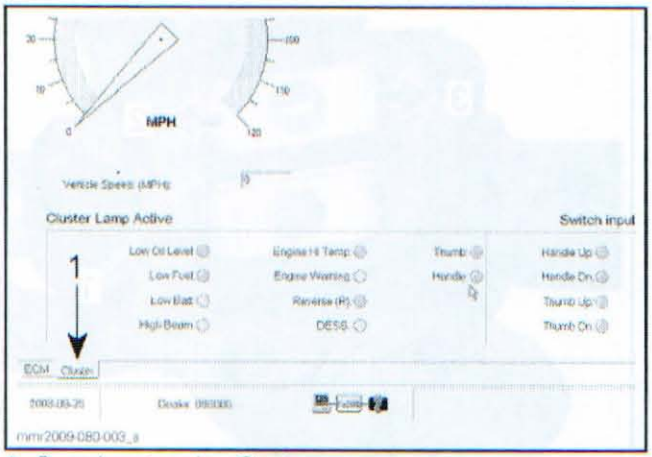

1. Press here to select Cluster

3. Press on the hand grip selector switch to alternately increase or decrease heat.
4. In B.U.D.S., look for the applicable indicator light in the **Switch inputs** box to turn green (Handle Up or Handle Dn). If they do, the heat selector switch for the hand grips is functioning correctly.

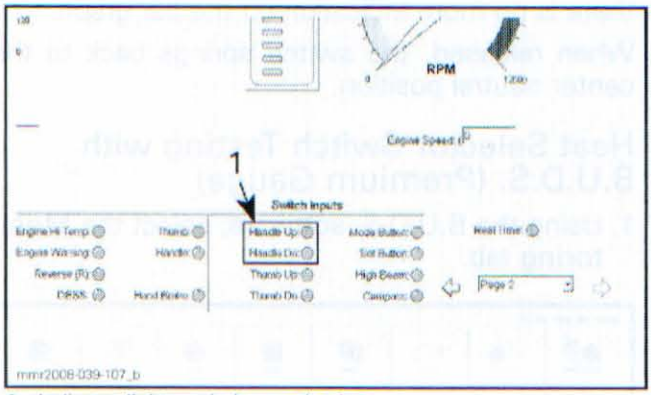

1. Indicator lights, grip heat selection

If the indicator lights do not come ON in B.U.D.S., carry out the same test with the thumb heat and the remote mode (M) and set (S) switches. If the indicator lights do not come ON for these other two switches, test continuity of the switch ground wire circuit. Refer to the *WIRING DIAGRAM* for circuit details.

If the selector switch, wiring and the heaters test good, replace the gauge.

Grip Heating Element Testing

If you cannot feel the temperature increase of a hand grip heating element, carry out the following steps.

1. Disconnect the two steering connectors located under the steering cover.

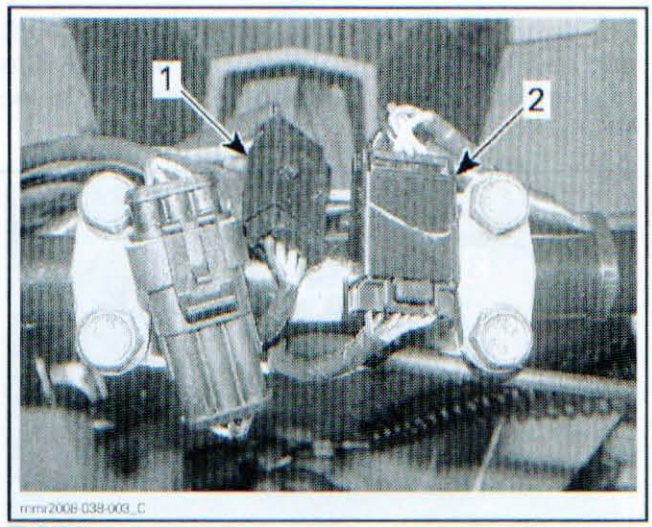

TYPICAL
1. LH steering connector
2. RH steering connector

2. Set the FLUKE 115 DIGITAL MULTIMETER (P/N 529 035 868) to Ω.
3. Test heating elements on either side as per following specifications.

Integrated Heaters

VEHICLES WITH STANDARD GAUGE			
INTENSITY	HEATER WIRE		RESISTANCE @ 20°C (68°F)
LOW	OR/VI	BK	15.5 to 19 Ω
HIGH	OR	BK	7.7 to 9.5 Ω

VEHICLES WITH PREMIUM GAUGE		
HEATER WIRE		RESISTANCE @ 20°C (68°F)
OR	BK	7.7 to 9.5 Ω

Adhesive Film Heaters on Steel Handlebar

VEHICLES WITH STANDARD GAUGE			
INTENSITY	HEATER WIRE		RESISTANCE @ 20°C (68°F)
LOW	OR/VI	BK	17 to 21 Ω
HIGH	OR	BK	8.5 to 10.5 Ω

VEHICLES WITH PREMIUM GAUGE		
HEATER WIRE		RESISTANCE @ 20°C (68°F)
OR	BK	8.5 to 10.5 Ω

www.midwestmanuals.com

Adhesive Film Heaters on Aluminum Handlebar

VEHICLES WITH STANDARD GAUGE			
INTENSITY	HEATER WIRE		RESISTANCE @ 20°C (68°F)
LOW	OR/VI	BK	10.7 to 13.1 Ω
HIGH	OR	BK	5.3 to 6.6 Ω

VEHICLES WITH PREMIUM GAUGE		
HEATER WIRE		RESISTANCE @ 20°C (68°F)
OR	BK	5.3 to 6.6 Ω

4. If readings are out of specifications, replace applicable handle grip heating element.

If heating element readings are within specifications, test continuity of switch and wiring. Refer to *WIRING DIAGRAM* for details.

5. Reconnect connectors.

Grip Heater Element Removal

NOTICE **Heater wire routing may vary significantly due to different type handlebars and vehicles. Its highly important to take note of exact positioning of grip heaters, locking ties, and wire routing before removing them from the handle bars. Failure to properly route wires may lead to equipment damage or failure.**

Models with Integrated Heaters

On models with heaters integrated within the rubber hand grip, refer to the *STEERING SYSTEM* section for removal procedure.

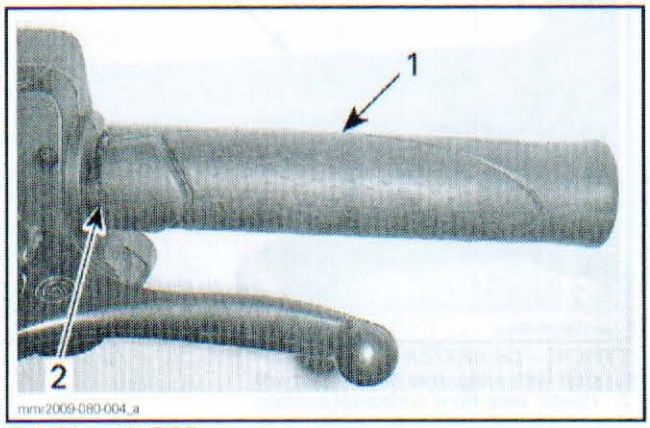

TYPICAL - LH SIDE
1. *Grip with integrated heater element*
2. *Heater wire*

Models with Adhesive Film Heaters

1. Remove the following items as applicable, refer to *STEERING SYSTEM* section for details.
   - Steering cover
   - Rubber hand grip
   - Multifunction switch cover.
2. Disconnect the LH or RH steering connectors under the steering cover.

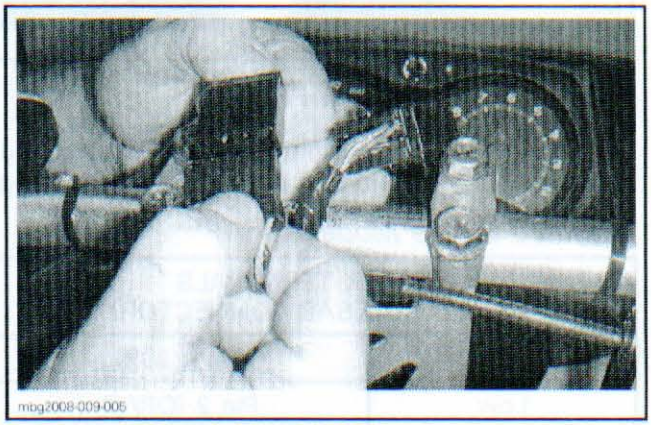

TYPICAL - STEERING CONNECTORS

3. Open the cover on the back of the connector housing using a small screwdriver or a suitable tool.

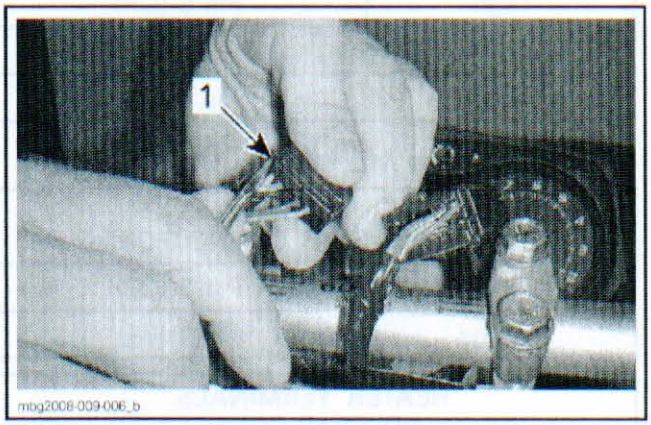

TYPICAL
1. *Connector housing cover locks (one each side)*

4. Using an appropriate tool such as the MULTILOCK - TERMINAL EXTRACTION TOOL (P/N 755430-2), unlock the heater wire terminals and push them out of the connector housing.

www.midwestmanuals.com

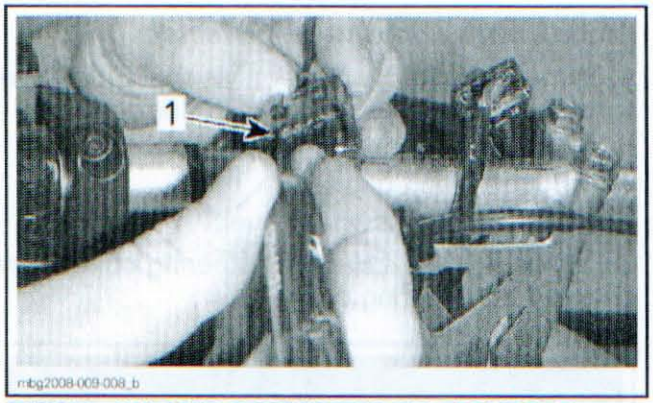

TYPICAL - UNLOCKING CONNECTOR PIN (FRONT SIDE)
1. Pin removal tool inserted above pin

NOTE: Terminals are unlocked and pushed out from the front (pin side) of the connector housing.

Standard Gauge Models

HEATER TERMINALS (LH HANDLEBAR CONNECTOR)	
High	Pin 1 (OR)
Low	Pin 2 (OR/VI)
Ground	Pin 3 (BK)

HEATER TERMINALS (RH HANDLEBAR CONNECTOR)	
High	Pin 6 (OR)
Low	Pin 5 (OR/VI)
Ground	Pin 4 (BK)

Premium Gauge Models

HEATER TERMINALS (LH HANDLEBAR CONNECTOR)	
Supply	Pin 2 (OR)
Ground	Pin 1 (BK)

HEATER TERMINALS (RH HANDLEBAR CONNECTOR)	
Supply	Pin 1 (OR)
Ground	Pin 4 (BK)

NOTICE **Be sure to take note of exact positioning of grip heaters, locking ties, and wire routing before removing them from the handlebar.**

5. Cut locking ties securing heater wires to handlebar.
6. Pull wires from harness protective sheath, multifunction switch housing or throttle lever housing.
7. Cut and remove BLACK electrical tape from heater element and remove heater from cork insulator.

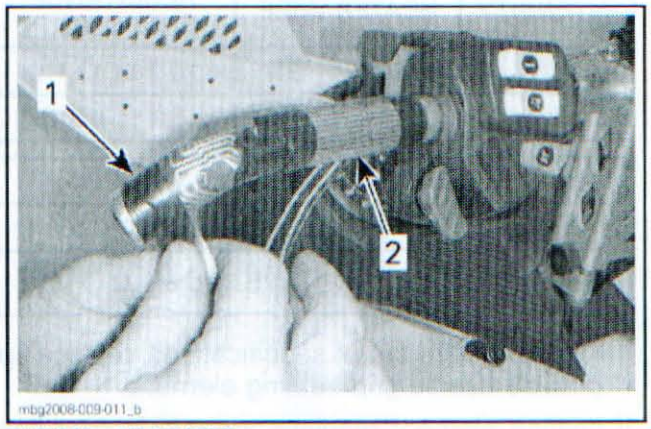

TYPICAL - LH HEATER
1. Electrical tape
2. Heater element

8. If damaged, remove cork insulator from handle bar and clean all adhesive residue from the handlebar.

Grip Heater Element Installation

Models with Integrated Heaters

On models with heaters integrated within the rubber hand grip, refer to the *STEERING SYSTEM* section for installation procedures.

NOTE: When installing the hand grips with integrated heaters, be sure to position them with the heater wire horizontally at the front of the handlebar for proper routing, both sides.

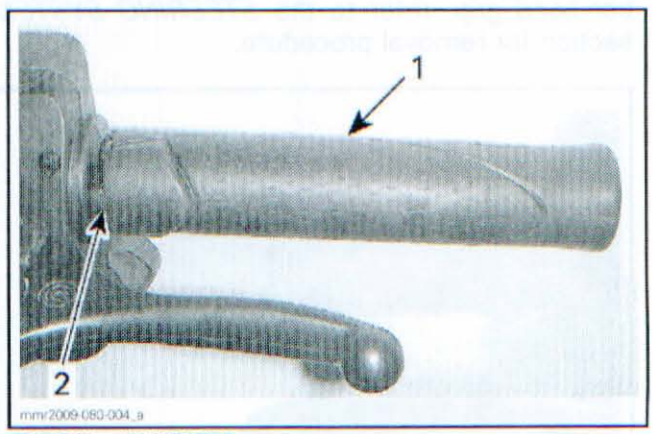

TYPICAL - LH HEATER
1. Grip with integrated heater element
2. Heater wire front horizontal position

www.midwestmanuals.com

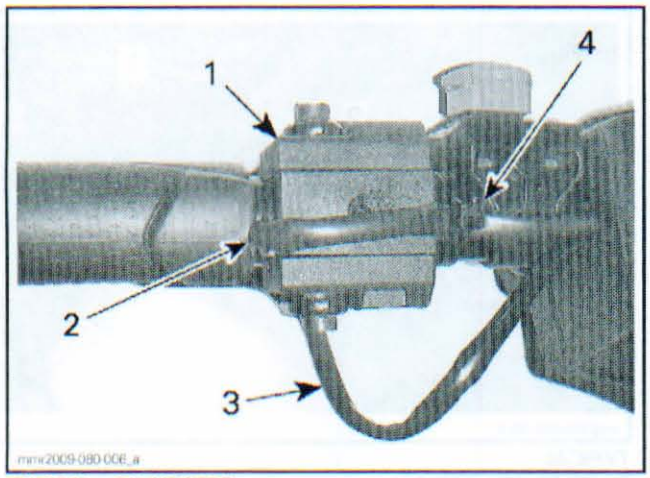

TYPICAL - RH HEATER
1. *Throttle lever housing*
2. *Heater wire front horizontal position*
3. *Throttle lever heater wire*
4. *Locking tie*

Models with Adhesive Film Heaters

1. Measure specified distance from the end of the handlebar, and across the top of the bend in the bar (if applicable). Trace a reference line with a marker at that point on the handle bar as shown.

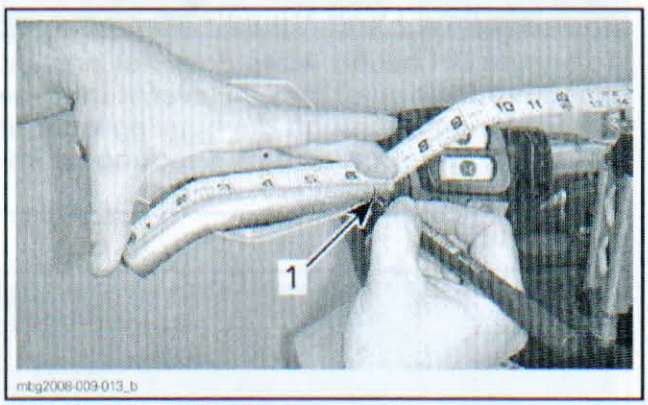

TYPICAL - ALUMINUM TYPE
1. *Trace reference line*

HANDLEBAR TYPE	REFERENCE LINE DISTANCE
STEEL	135 mm (5.3 in)
ALUMINUM	153 mm (6 in)

2. Align the edge of the cork insulator with the reference line centered with the handlebar folding axis as illustrated. The ends should meet to form the joint under the handlebar.

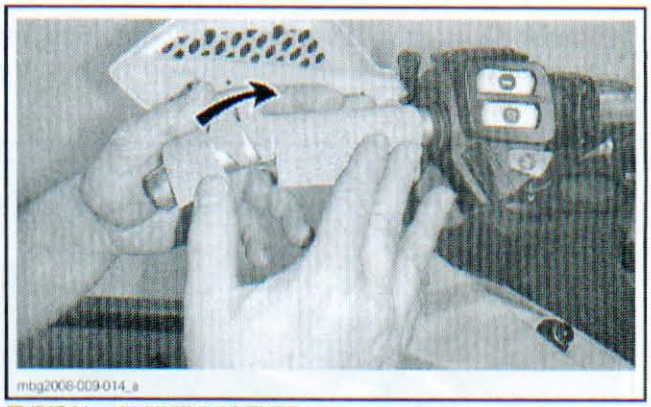

TYPICAL - ALUMINUM TYPE

3. Apply firm pressure to cork insulator to assure proper adherence to handlebar.
4. Install the film heater element on the cork insulator and center of handlebar folding axis as per following table.

HANDLEBAR TYPE	HEATER ALIGNMENT
STEEL	At 2.5 mm (3/32 in) of the inside edge of insulator
ALUMINUM	Flush to inside edge of insulator

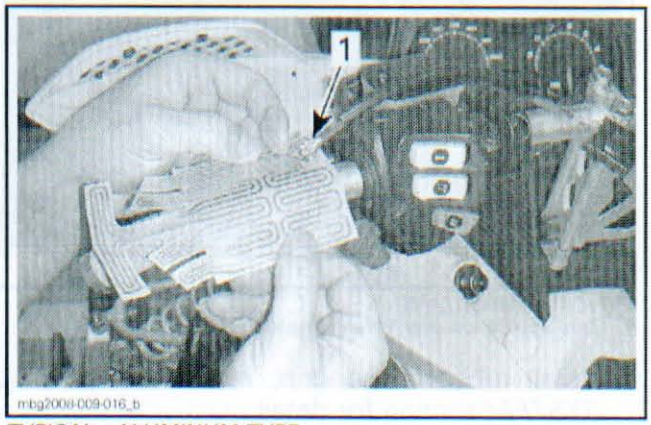

TYPICAL - ALUMINUM TYPE
1. *Heater wire position (LH front, RH rear)*

5. Apply firm pressure to heater to assure proper adherence to cork insulator.

NOTE: The same heater element is used for both the LH and RH sides. Therefore, the electrical wiring will be in front of the handlebar on the LH side, and behind the handlebar (towards driver) on the RH side.

6. On aluminum handlebar, apply two turns of BLACK electrical tape at each of the four locations illustrated. On steel handlebar, apply tape at the outside and inside ends (two locations). The tape must cover the edges of the

www.midwestmanuals.com

heater element and welds to prevent snagging and damage to the element during rubber grip installation.

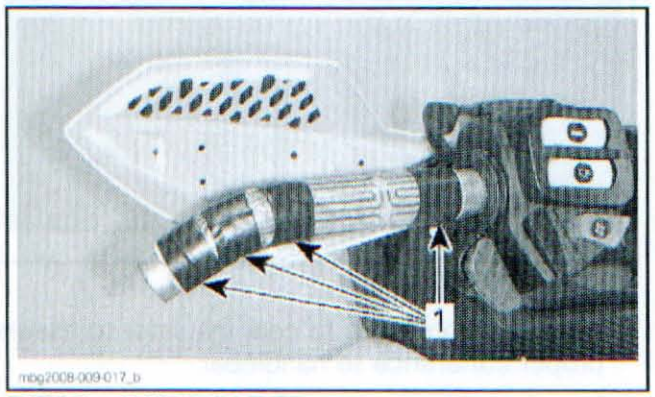

TYPICAL - ALUMINUM TYPE
1. Electrical tape application

NOTE: It is highly important to apply tape so that it fully secures the electrical wire connections and covers welds. This will ease installation of the rubber hand grip and prevent undue stress to the connections.

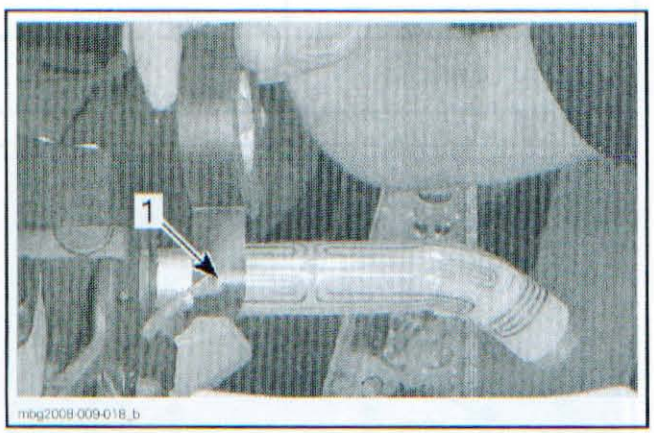

TYPICAL - IMPORTANT
1. Tape application over wire connections

7. Install rubber hand grip, refer to *STEERING SYSTEM* section for detail.
8. Route wiring as noted during the removal procedure.
9. Insert wire connectors in steering connector housing.

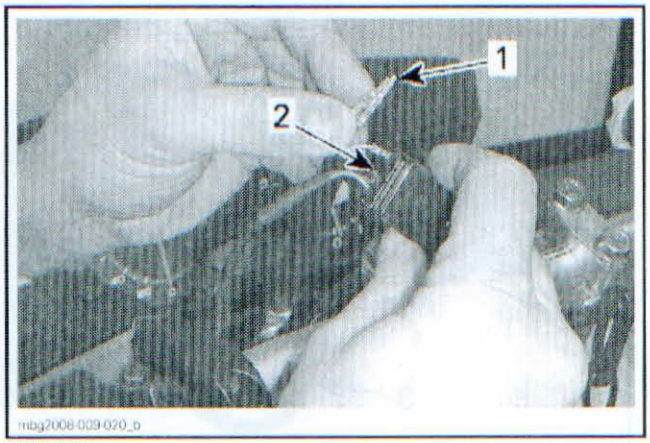

TYPICAL
1. Heater wire terminals
2. Insertion through back of connector

NOTE: On vehicles equipped with a premium gauge, only two of the heater wires are used. The ORANGE/VIOLET wire terminal will need to be cut off near the connector, insulated using heat shrink, a terminal end or electrical tape, then stored inside the wire harness protective sheath.

10. Install locking ties to secure the heater wire tightly against the handlebar.

⚠ WARNING

To ensure RH heater wires does not prevent smooth operation of throttle lever, it must be passed straight through the housing without any slack, and secured with a locking tie immediately after the lever housing.

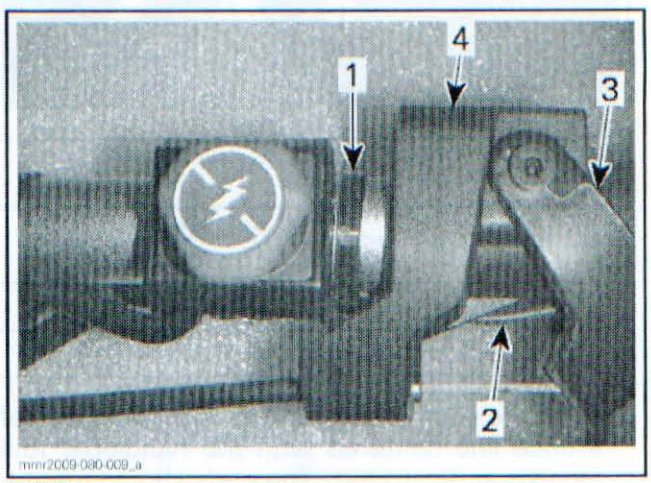

TYPICAL
1. Locking tie
2. Heater wire straight through throttle lever housing
3. Throttle lever
4. Lever housing

www.midwestmanuals.com

NOTICE Ensure LH heater wires are properly routed through multifunction switch housing to prevent them from being pinched when installing housing cover. Pinched or damaged wires may result in a short circuit.

11. Start engine or apply power to the accessories, refer to *LIGHTING AND ACCESSORIES SYSTEM TESTING* in this subsection.
12. Using the hand grip heat selector switch, turn on the hand grip heaters and ensure they are functioning correctly.

PASSENGER HEATED GRIPS

GTX Only

System Description

The grip heater is controlled by a toggle switch located on the LH handhold.

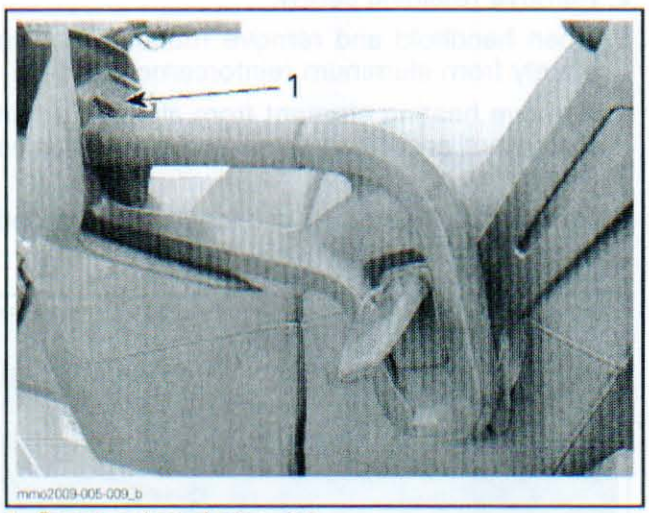

1. Passenger heated grip switch

Adjust heating intensity as shown.

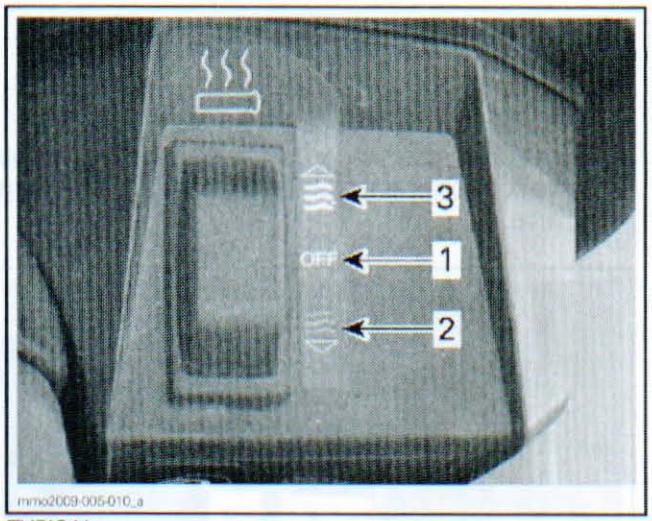

TYPICAL
1. OFF
2. Low
3. High

Passenger Grips Voltage Input Test

1. Refer to *BODY* and remove passenger seat.
2. From under the seat, locate the applicable accessory connector and pull it out of its retaining clip.
3. Set FLUKE 115 DIGITAL MULTIMETER (P/N 529 035 868) to Vdc.
4. Start engine or apply power to the accessories, refer to *LIGHTING AND ACCESSORIES SYSTEM TESTING* in this subsection.
5. Back probe connector and read voltage as follows:

LH HEATED GRIP			
SWITCH POSITION	PROBES		VOLTAGE
Low	OR wire (pin 1)	BK (Pin 3)	Battery voltage
High	OR/VI wire (pin 2)		

LH HEATED GRIP			
SWITCH POSITION	PROBES		VOLTAGE
Low	OR wire (pin 3)	BK (Pin 1)	Battery voltage
High	OR/VI wire (pin 2)		

Reading should be battery voltage. If no voltage is read, refer to *WIRING DIAGRAM* and check switch, ground and supply circuits independently. Repair open circuit or replace switch as needed.

www.midwestmanuals.com

Passenger Grips Heating Element Testing

1. Refer to *BODY* and remove passenger seat.
2. From under the seat, disconnect the applicable accessory connector and pull it out of its retaining clip.

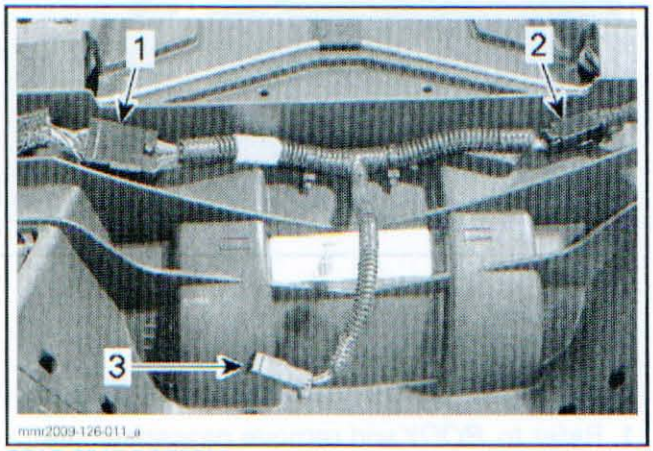

REAR SEAT BOTTOM
1. *LH accessory connector*
2. *RH accessory connector*
3. *Rear seat supply connector*

3. Set multimeter to Ω.
4. Test heating element as per following specifications.

LH PASSENGER GRIP HEATER			
INTENSITY	HEATER WIRE		RESISTANCE @ 20°C (68°F)
LOW	OR/VI Pin 2	BK Pin 3	17 to 21 Ω
HIGH	OR Pin 1		8.5 to 10.5 Ω

RH PASSENGER GRIP HEATER			
INTENSITY	HEATER WIRE		RESISTANCE @ 20°C (68°F)
LOW	OR/VI Pin 2	BK Pin 1	17 to 21 Ω
HIGH	OR Pin 3		8.5 to 10.5 Ω

If heating element readings are not within specifications, replace heating element.

If heating element readings are within specifications, carry out *PASSENGER GRIPS VOLTAGE INPUT TEST*.

Passenger Grips Heating Element Replacement

1. Roll up rubber grip just enough to clear retaining screw.

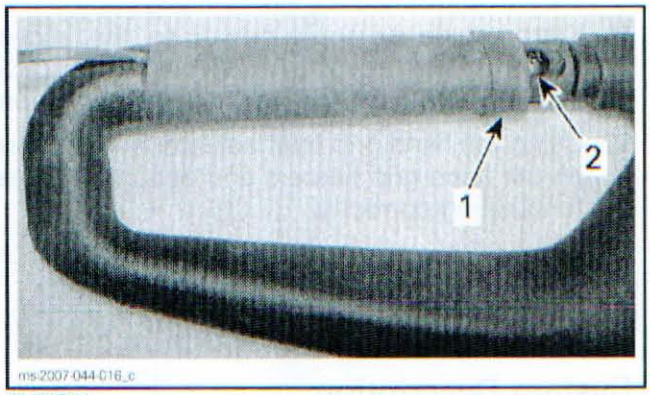

TYPICAL
1. *Rubber grip*
2. *Screw*

2. Remove retaining screw.
3. Open handhold and remove rubber grip completely from aluminum reinforcement.
4. Remove heating element from aluminum reinforcement and clean remaining glue if necessary.
5. Turn seat upside down and locate the appropriate connector.

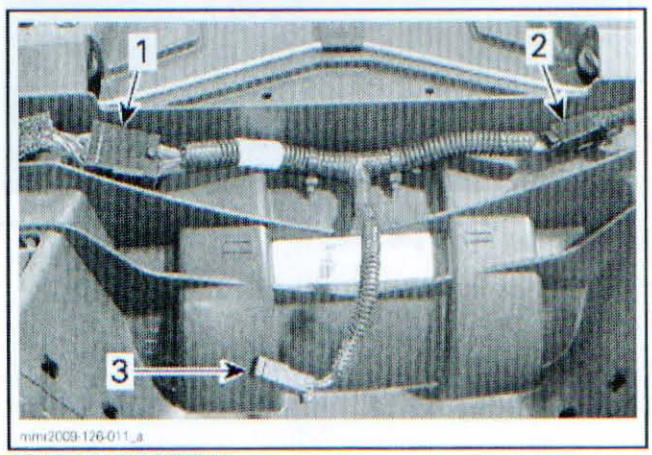

REAR SEAT BOTTOM
1. *LH accessory connector*
2. *RH accessory connector*
3. *Rear seat supply connector*

6. Open connector cover.

www.midwestmanuals.com

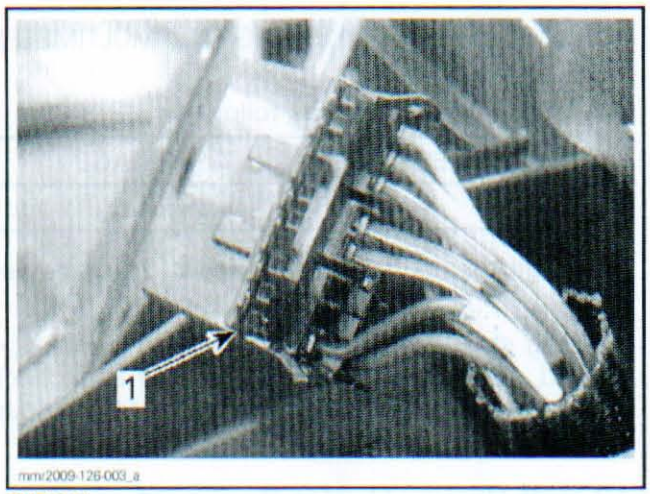

mmr2009-126-003_a

TYPICAL

1. Connector cover

7. Using an appropriate tool such as the MULTILOCK - TERMINAL EXTRACTION TOOL (P/N 755430-2), unlock the heater wire terminals and push them out of the connector housing.

NOTE: On the RH connector, remove all three terminals.

LH CONNECTOR HEATER TERMINALS	
High	Pin 1 (OR)
Low	Pin 2 (OR/VI)
Ground	Pin 3 (BK)

8. Securely Install the end of a metal wire length on the terminals and apply some electrical tape tightly over it. This will help routing the wires back through the sheath.

NOTE: The LH wires have to be pulled out one at time. The RH wires can be pulled out all together.

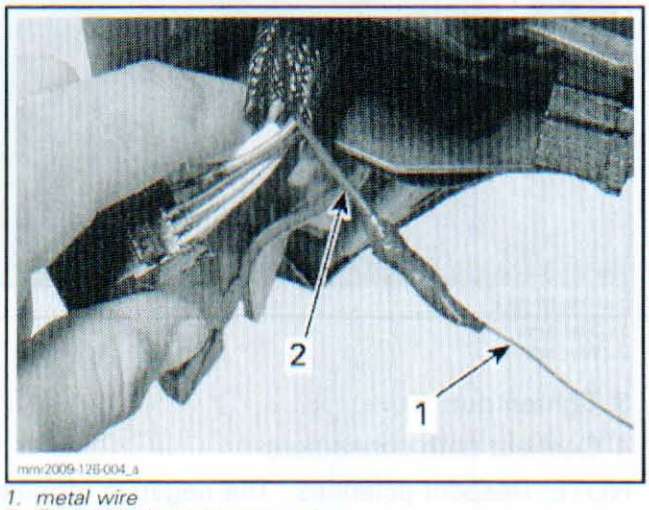

mmr2009-126-004_a

1. metal wire
2. Electrical wire to be removed

9. Carefully pull the wires out.

10. Remove the old heating element wires from the metal wire end.
11. Securely install the end of the metal wire on the new heating element wire terminals and apply tape.
12. Carefully route the new heating element wires through the sheath using the metal wire.
13. Stick the new heating element starting at approximately 2 mm (5/64 in) from the lower edge of the aluminum reinforcement.

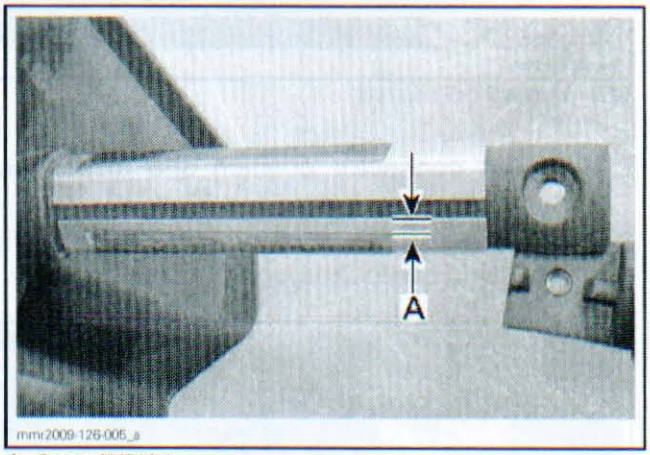

mmr2009-126-005_a

A. 2 mm (5/64 in)

14. Apply a solution of soap and water to the inside of the rubber hand grip.
15. Slide rubber grip back onto the aluminum reinforcement leaving room to install screw.
16. Close the handhold and tighten screw.
17. Finish the rubber grip installation.
18. Reinstall terminals into connector housing and close cover.
19. Reconnect connector and install seat.
20. Start engine or apply power to the accessories, refer to *LIGHTING AND ACCESSORIES SYSTEM TESTING* in this subsection.
21. Operate heated grips to make sure they work properly.
22. Install remaining components.

Passenger Heated Grips Switch Replacement

1. Remove all five LH wind deflector screws.

NOTE: The fifth screw is located inside wind deflector.

www.midwestmanuals.com

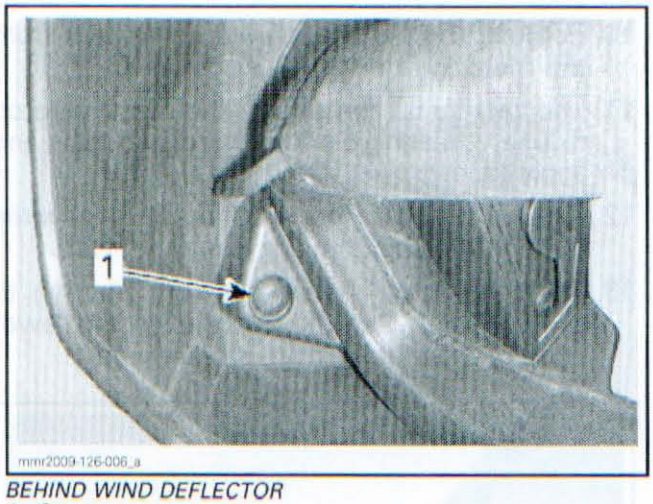

BEHIND WIND DEFLECTOR
1. *Screw*

2. Note the connector position and disconnect them.
3. Remove switch by pushing retaining clips in and passing switch through console.

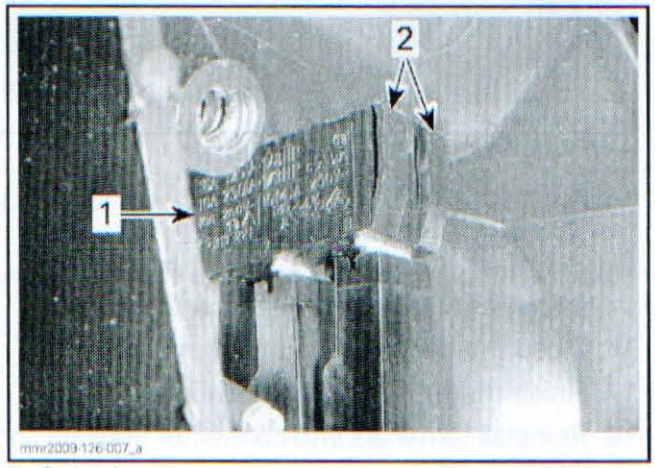

1. *Switch housing*
2. *Retaining clips*

4. Install and connect the new switch.
5. Install other removed parts.

12-VOLT POWER OUTLET

12-Volt Power Outlet Testing

GSX and GTX Only

First try another accessory, if it does not function, test outlet as follows:

1. Remove console, refer to *BODY* section.
2. Disconnect both power outlet connectors.
3. Apply power to the accessories circuits, see *LIGHTING AND ACCESSORIES SYSTEM TESTING* in this section.
4. Set the FLUKE 115 DIGITAL MULTIMETER (P/N 529 035 868)
5. Measure the voltage as follows.

WIRES		VOLTAGE
RD/YL	BK	Approximately 12 Vdc

If voltage reading is good, replace 12 volt power outlet.

Reading should be battery voltage. If no voltage is read, refer to *WIRING DIAGRAM* and check ground and supply circuits independently. Repair open circuit as needed.

12-Volt Power Outlet Removal

1. Remove console, refer to *BODY* section.
2. Disconnect both connectors from the power outlet.
3. Unscrew the nut securing the power outlet to console until loose (maximum 1/2 turn), then pull it off.
4. Unlock power outlet by turning it counterclockwise, then remove it.

12-Volt Power Outlet Installation

1. Install power outlet in bore, then lock it in place by turning it clockwise.
2. Align the nut tabs with the flat areas on the power outlet, then push nut up until it leans against the gauge support.

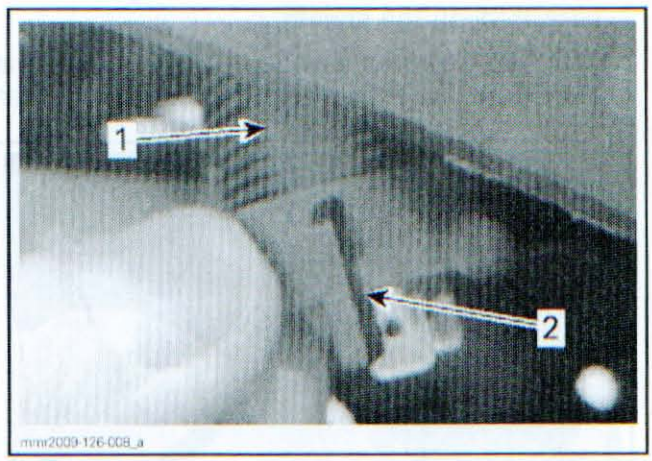

1. *Flat area*
2. *Nut tab*

3. Tighten nut.
4. Connect both connectors.

NOTE: Respect polarities. The negative terminal is located closest to the power outlet edge.

www.midwestmanuals.com

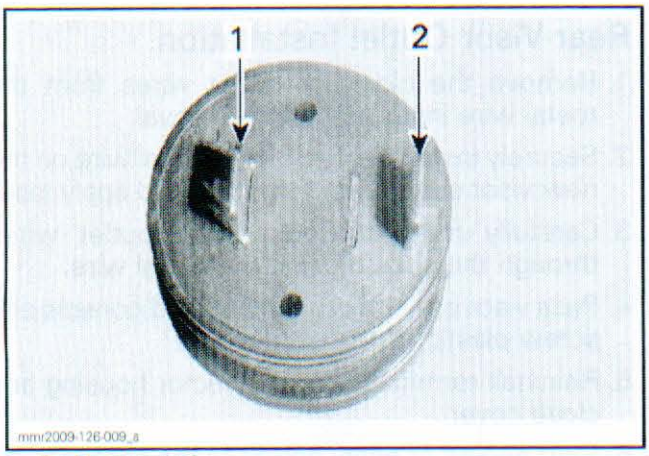

1. Positive terminal
2. Negative terminal (closer to the edge)

FRONT VISOR OUTLET (DRIVER)

GSX and GTX Only

Front Visor Outlet Testing

1. Set the FLUKE 115 DIGITAL MULTIMETER (P/N 529 035 868) to Vdc.
2. Apply power to the accessories circuits, see *LIGHTING AND ACCESSORIES SYSTEM TESTING* in this subsection.
3. Measure voltage in visor outlet.
   - 3.1 Put multimeter RED probe in the outlet female terminal and hold.
   - 3.2 Touch the metal outer surface of the outlet with the BLACK multimeter probe.

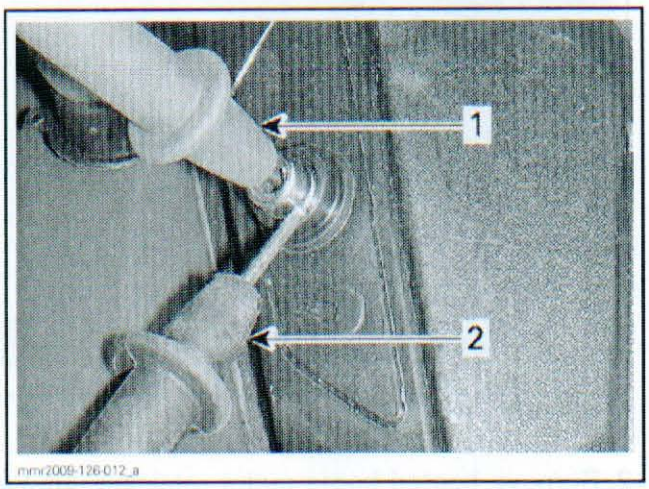

1. RED probe
2. BLACK probe

Reading should be battery voltage. If no voltage is read, refer to *WIRING DIAGRAM* and check ground and supply circuits independently. Repair open circuit as needed.

Front Visor Outlet Removal

1. Remove console, refer to *BODY* section.
2. Refer to *AIR INTAKE SYSTEM* and disconnect intake hose.
3. Follow the visor outlet wires, locate connector and disconnect it.
4. Unscrew the visor outlet plastic cover, then remove outlet from gauge support.

Front Visor Outlet Installation

The installation is the reverse of the removal procedure. Refer to *AIR INTAKE SYSTEM* subsection for intake hose installation and *BODY* section for console installation.

REAR VISOR OUTLET (PASSENGER)

GTX Only

Rear Visor Outlet Testing

1. Apply the *FRONT DRIVER VISOR OUTLET TESTING (DRIVER)* method.

Rear Visor Outlet Removal

1. Refer to *BODY* and remove passenger seat.
2. Turn seat upside down and locate the LH connector.

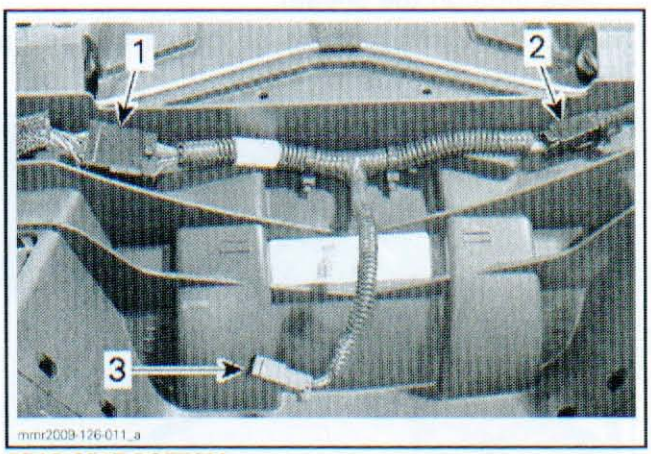

REAR SEAT BOTTOM
1. LH accessory connector
2. RH accessory connector
3. Rear seat supply connector

3. Open connector cover.

www.midwestmanuals.com

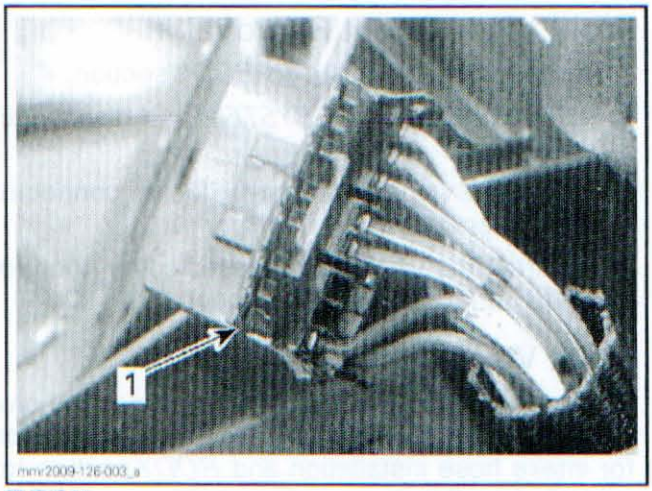

TYPICAL
1. *Connector cover*

4. Using an appropriate tool such as the MULTILOCK - TERMINAL EXTRACTION TOOL (P/N 755430-2), unlock the visor outlet wire terminals and push them out of the connector housing.

VISOR OUTLET CONNECTOR TERMINALS	
Positive	Pin 11 (RD/YL)
Ground	Pin 6 (BK)

5. Securely Install the end of a metal wire length on the terminals and apply some electrical tape tightly over it. This will help routing the wires back through the sheath.

NOTE: The wires have to be pulled out one at time.

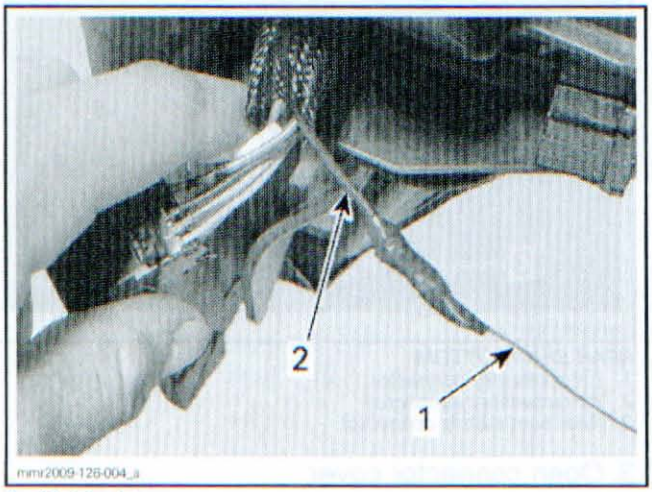

1. *Metal wire*
2. *Electrical wire to be removed*

6. Carefully pull the wires out.

Rear Visor Outlet Installation

1. Remove the old visor outlet wires from the metal wire installed during removal.
2. Securely install the end of the metal wire on the new visor outlet wire terminals and apply tape.
3. Carefully route the new visor outlet wires through the sheath using the metal wire.
4. Pass visor outlet through handhold console and screw plastic cap to secure it.
5. Reinstall terminals into connector housing and close cover.
6. Start engine or apply power to the accessories, refer to *LIGHTING AND ACCESSORIES SYSTEM TESTING* in this subsection.
7. Test visor outlet to make sure it works properly.
8. Install remaining components.

HEATED BOOTS OUTLET (GTX ONLY)

Heated Boots Outlet Testing

First, try another accessory, if it does not function, test visor outlet.

1. Remove all five LH wind deflector screws.

NOTE: The fifth screw is located inside wind deflector.

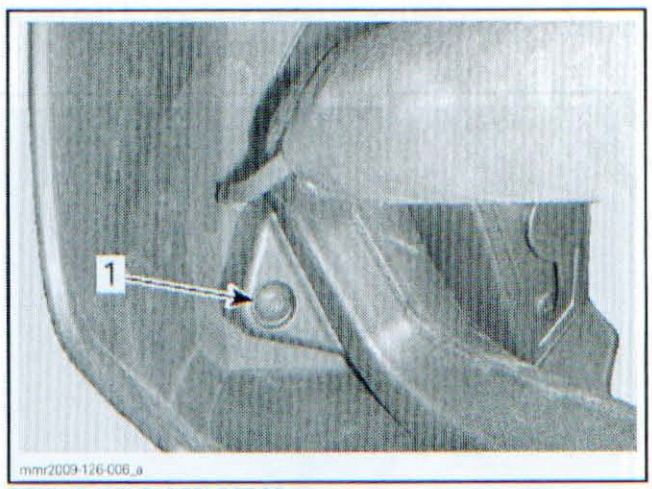

BEHIND WIND DEFLECTOR
1. *Screw*

2. Remove heated boots outlet retaining nut and washer, then remove outlet.
3. Set FLUKE 115 DIGITAL MULTIMETER (P/N 529 035 868) to Vdc.
4. Apply power to the accessories circuits, see *LIGHTING AND ACCESSORIES SYSTEM TESTING* in this subsection.

www.midwestmanuals.com

5. Measure voltage on heated boots outlet.
   5.1 Put multimeter RED probe in the outlet making sure to touch the pin terminal (positive).
   5.2 Touch the metal tab (ground) on the outlet with the BLACK multimeter probe.

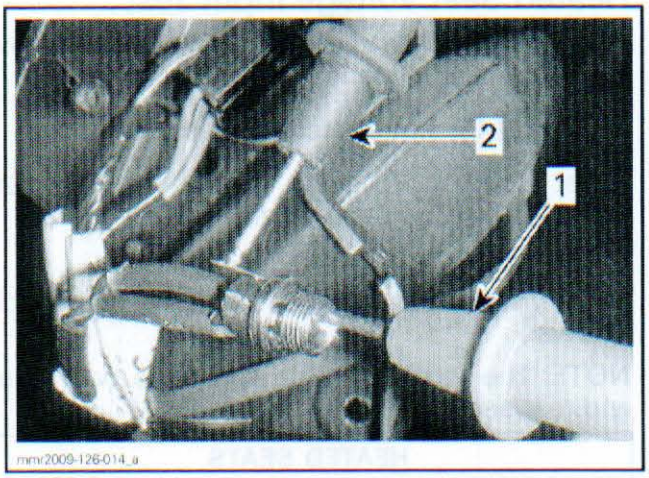

1. RED Probe
2. BLACK probe

Reading should be battery voltage. If no voltage is read, refer to *WIRING DIAGRAM* and check ground and supply circuits independently. Repair open circuit as needed.

Heated Boots Outlet Removal

1. Carry out steps 1 and 2 of *HEATED BOOTS OUTLET TESTING*.
2. Refer to *BODY* and remove passenger seat.
3. Turn seat upside down and locate the LH connector.

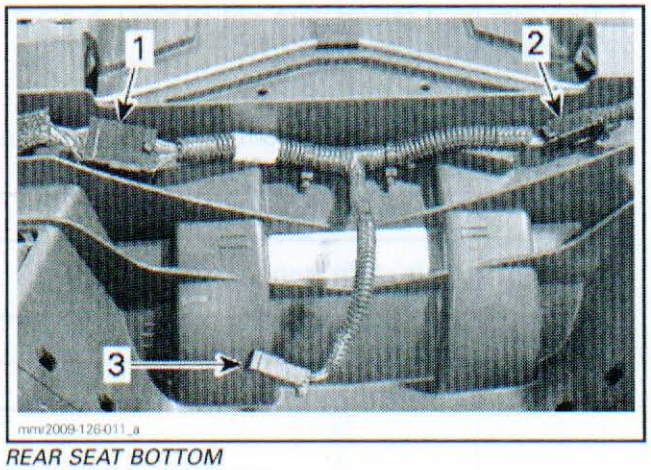

REAR SEAT BOTTOM
1. LH accessory connector
2. RH accessory connector
3. Rear seat supply connector

4. Open connector cover.

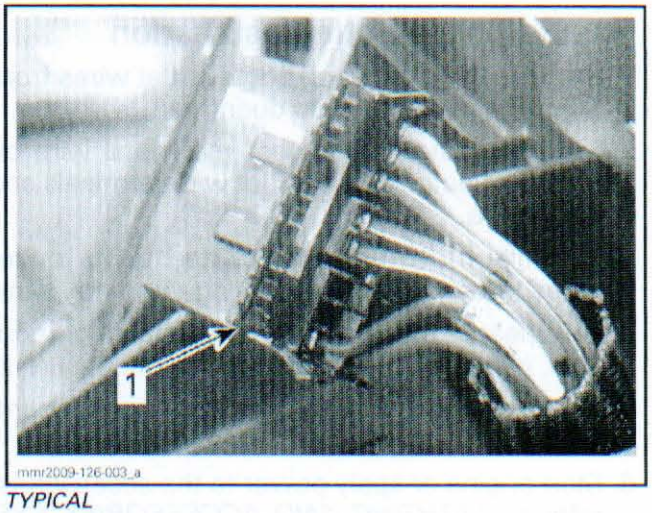

TYPICAL
1. Connector cover

5. Using an appropriate tool such as the MULTILOCK - TERMINAL EXTRACTION TOOL (P/N 755430-2), unlock the heated boots outlet wire terminals and push them out of the connector housing.

HEATED BOOTS OUTLET CONNECTOR TERMINALS	
Positive	Pin 10 (RD/YL)
Ground	Pin 14 (BK)

6. Securely Install the end of a metal wire length on the terminals and apply some electrical tape tightly over it. This will help routing the wires back through the sheath.

NOTE: The wires have to be pulled out one at time.

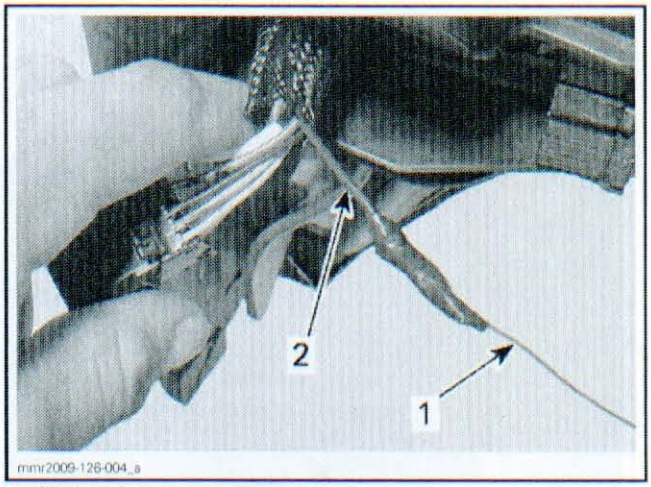

1. Metal wire
2. Electrical wire to be removed

7. Carefully pull the wires out.

www.midwestmanuals.com

Heated Boots Outlet Installation

1. Remove the old heated boots outlet wires from the metal wire installed during removal.
2. Securely install the end of the metal wire on the new heated boots outlet wire terminals and apply tape.
3. Carefully route the new heated boots outlet wires through the sheath using the metal wire.
4. Pass heated boots outlet through handhold console, install washer and screw nut to secure it.
5. Reinstall terminals into connector housing and close cover.
6. Start engine or apply power to the accessories, refer to *LIGHTING AND ACCESSORIES SYSTEM TESTING* in this subsection.
7. Test heated boots outlet to make sure it works properly.
8. Install remaining components.

HEATED SEATS

GTX SE Only

System Description

The heated seats are controlled by toggle switches.

The driver's seat switch is located on the RH side of gauge support.

The passenger seat switch is located on the LH passenger handhold.

Adjust heating intensity as shown.

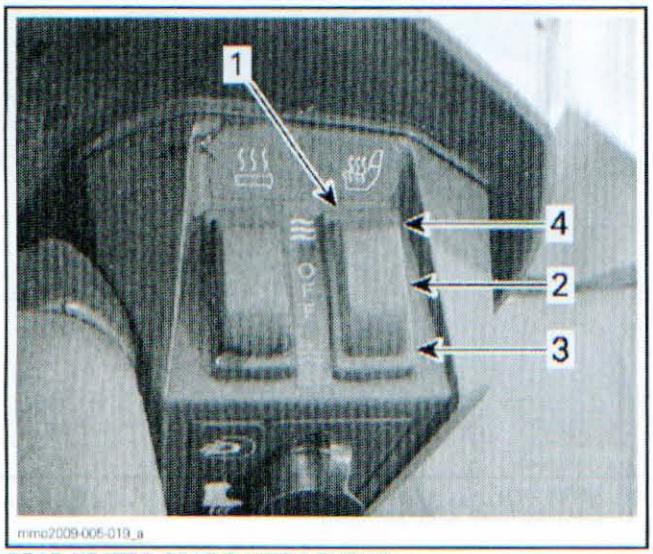

REAR HEATED SEAT SWITCH SHOWN
1. *Heated seat switch*
2. *OFF*
3. *Low*
4. *High*

NOTE: A diode is installed between the low and the high intensity circuits to prevent a current bridge between these circuits. If no seat heating intensity is felt when toggling switch from LOW to HIGH, check diode. Refer to *WIRING DIAGRAM* for details.

Heated Seat Voltage Input Test

1. Refer to *BODY* and unlatch applicable seat leaving the heater connector connected.

NOTICE **Do not stretch harness.**

2. Set FLUKE 115 DIGITAL MULTIMETER (P/N 529 035 868) multimeter to Vdc.
3. Start engine.
4. Back probe connector and read voltage as follows:

NOTE: The following table applies to both front and rear seat.

HEATED SEATS			
SWITCH POSITION	PROBES		VOLTAGE
Low	Pin 4 (YL)	Pin 1 (BK)	Battery voltage
High	Pin 3 (RD)		

Reading should be battery voltage. If no voltage is read, refer to *WIRING DIAGRAM* and check switch, ground and supply circuits independently. Repair open circuit or replace switch as needed.

Seat Heating Element Testing

The heated seat connectors are located underneath the seats, see illustrations.

1. Remove seat taking care not to stretch electrical harness, refer to *BODY*.
2. Set multimeter to Ω.
3. Measure resistance in heating element as per following table.

SEAT HEATERS			
INTENSITY	HEATER WIRE		RESISTANCE @ 20°C (68°F)
LOW	YL	BK	29 to 35 Ω
HIGH	RD	BK	16 to 19 Ω

www.midwestmanuals.com

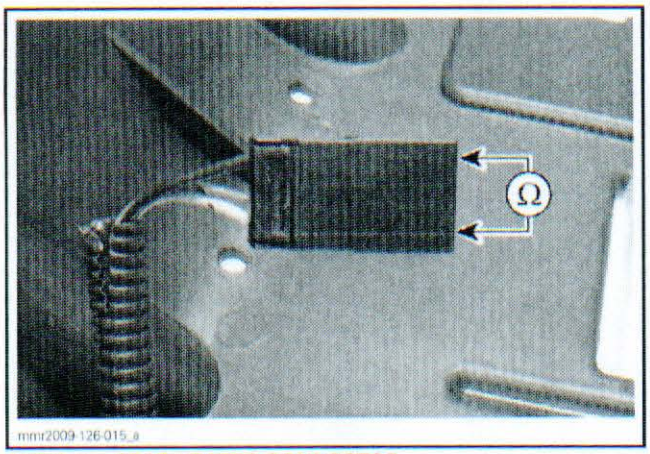

TYPICAL - SEAT HEATER CONNECTOR

If heating element readings are not within specifications, replace heating element.

If heating element readings are within specifications, carry out *HEATED SEATS VOLTAGE INPUT TEST.*

Seat Heating Element Replacement

The heating elements are part of the seat covers. To replace a defective seat heating element, replace seat cover. Refer to *BODY* for procedure.

Driver Heated Seat Switch

Driver Heated Seat Switch Replacement

1. Remove the console, refer to *BODY* section.
2. Remove switch from gauge support by releasing the retaining tabs and pushing switch out.
3. Disconnect connectors from old switch and connect them to the new switch one at a time.
4. install the new switch in the gauge support.
5. Install other removed parts.

Passenger Heated Seat Switch

Passenger Heated Seat Switch Replacement

Use the same method as the *PASSENGER HEATED GRIPS SWITCH REPLACEMENT* (in this subsection).

www.midwestmanuals.com

www.midwestmanuals.com

DRIVE BELT

SERVICE TOOLS

Description	Part Number	Page
DRIVEN PULLEY OPENING TOOL	529 017 200	299
DRIVEN PULLEY OPENING TOOL	529 036 127	299, 301

GENERAL

APPLICATION CHART

MODEL	DRIVE BELT (P/N)
All REV-XR 1200	417 300 383

PROCEDURES

DRIVE BELT GUARD

Drive Belt Guard Removal

⚠ WARNING

NEVER operate the snowmobile without the drive belt guard securely installed.

Open the LH side panel.

Remove retaining pin.

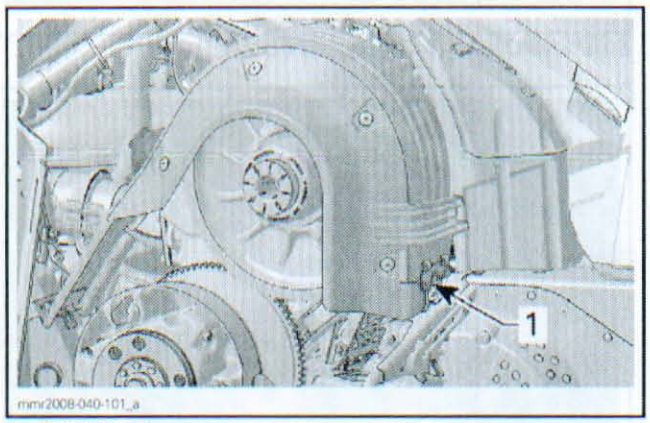

1. Retaining pin

Lift rear portion of guard then release from front tabs by pivoting the guard outwards.

Drive Belt Guard Installation

Place the front LH slot of the guard over the longest tab.

Pivot the guard inward to engage the shortest tab in the RH slot.

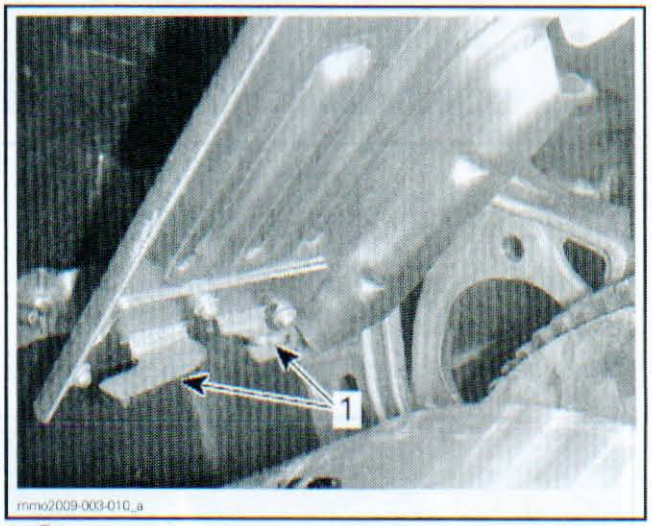

1. Tabs

Position the grommet over the retaining rod. It may be necessary to slightly lift the console to make room.

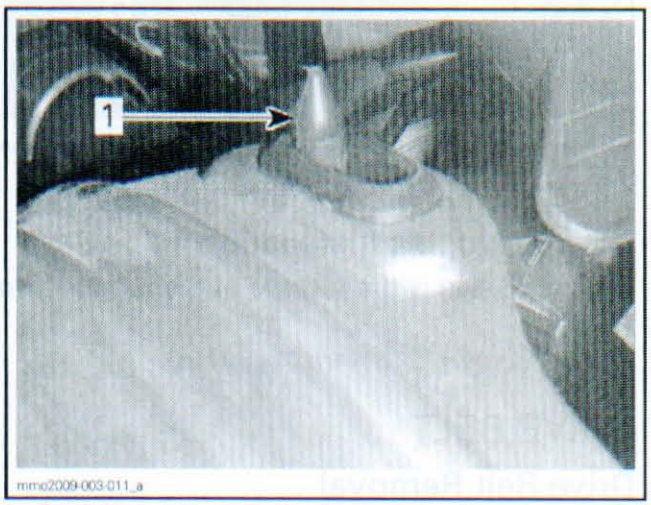

1. Retaining rod

Position rear portion of the drive belt guard over the retainer and secure it using the retaining pin.

www.midwestmanuals.com

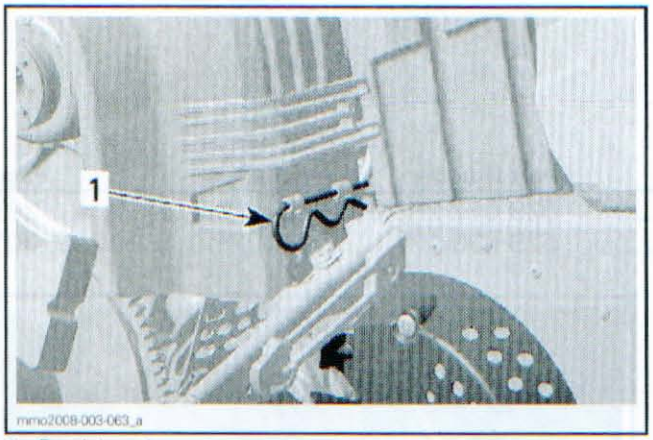

mmo2008-003-063_a

1. Retaining pin

DRIVE BELT GUARD SUPPORT

Guard Support Removal

Remove the drive belt guard.

Remove screws securing the support to vehicle.

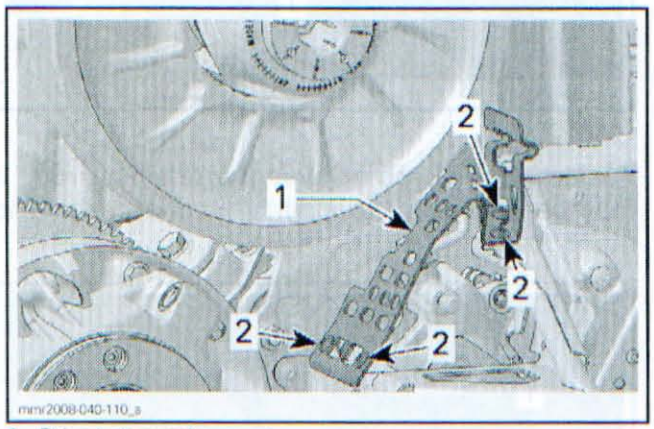

mmr2008-040-110_a

1. Drive belt guard support
2. Screws

Guard Support Installation

The installation is the reverse of the removal procedure.

Tighten screws to 5 N•m (44 lbf•**in**).

DRIVE BELT

Drive Belt Removal (Ring Type Pulley Adjuster)

Open the LH side panel.

Remove the drive belt guard.

Using the spark plug tool (included in the tool kit) or an 11/16 in thin wall socket, loosen (± 4 turns) the adjustment ring adapter located inside adjustment ring.

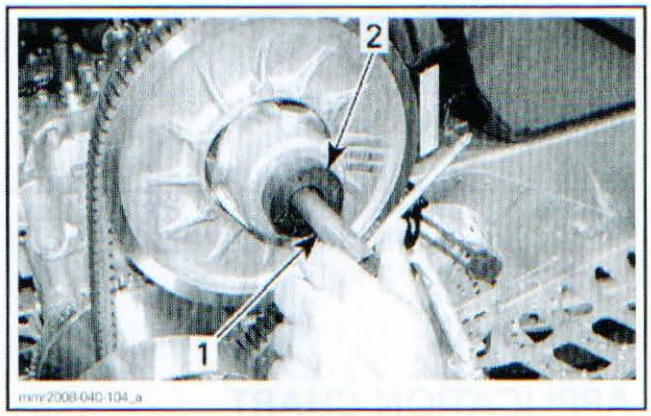

mmr2008-040-104_a

1. Spark plug tool
2. Driven pulley adjustment ring

To open the driven pulley, proceed as follows with one of the following tools.

Procedure with Suspension Adjustment Tool

Using the suspension adjustment tool (included in the tool kit), open the driven pulley by turning the tool clockwise.

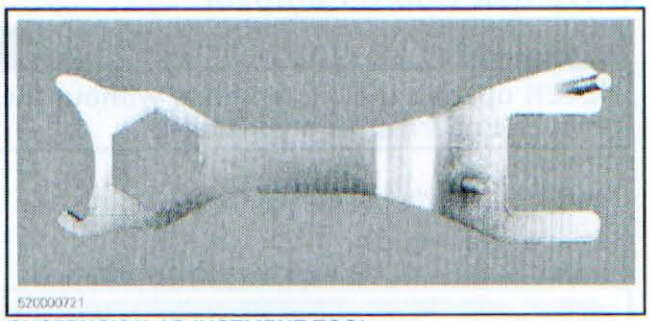
520000721

SUSPENSION ADJUSTMENT TOOL

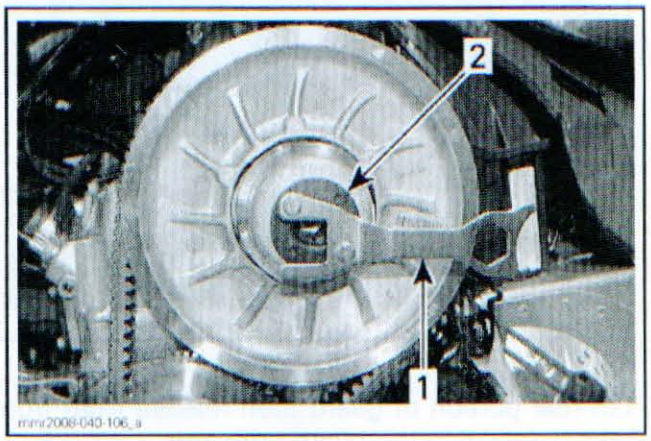

mmr2008-040-106_a

1. Suspension adjustment tool
2. Driven pulley adjustment ring

To remove belt, slip the belt over the top of driven pulley.

www.midwestmanuals.com

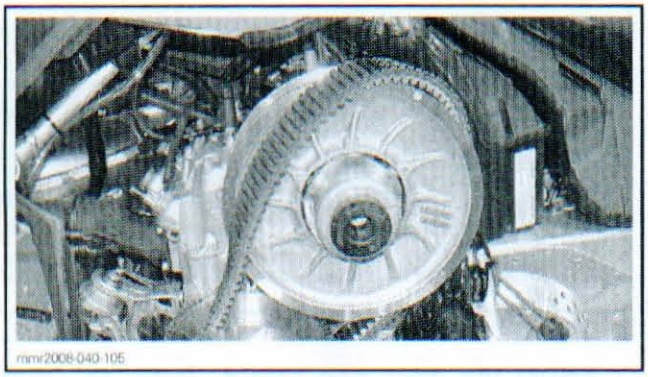

Procedure with Driven Pulley Opening Tool

Using the DRIVEN PULLEY OPENING TOOL (P/N 529 036 127), open the driven pulley by turning the tool clockwise.

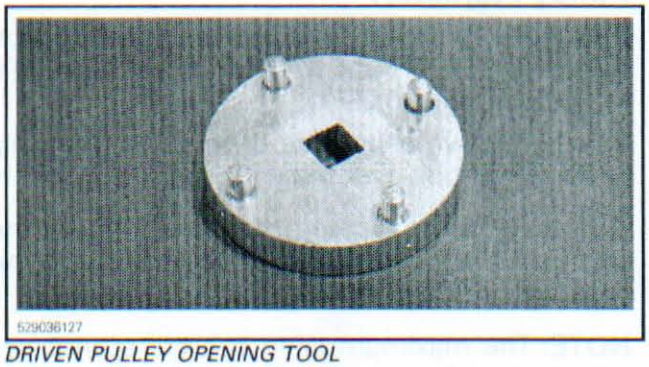

DRIVEN PULLEY OPENING TOOL

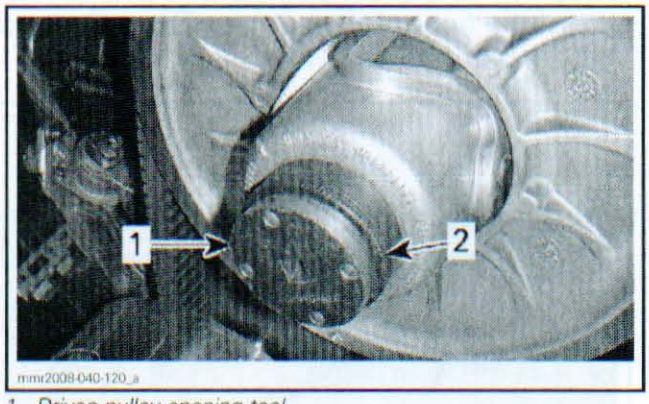

1. *Driven pulley opening tool*
2. *Driven pulley adjustment ring*

To remove belt, slip the belt over the top of driven pulley, then over the drive pulley.

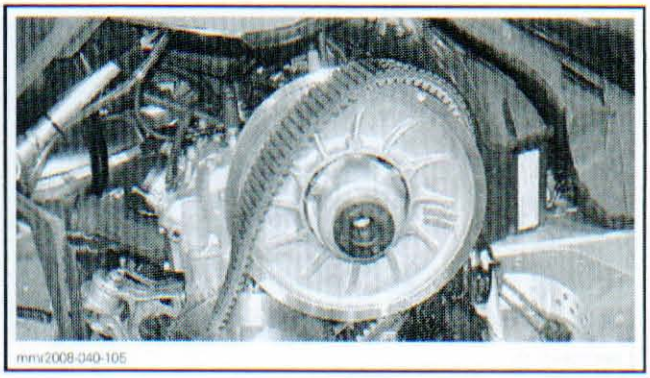

Drive Belt Removal (Screw Type Pulley Adjuster)

1. Remove the drive belt guard.
2. Insert the DRIVEN PULLEY OPENING TOOL (P/N 529 017 200) (or the tool provided in the tool box) in the threaded hole on the adjuster hub.

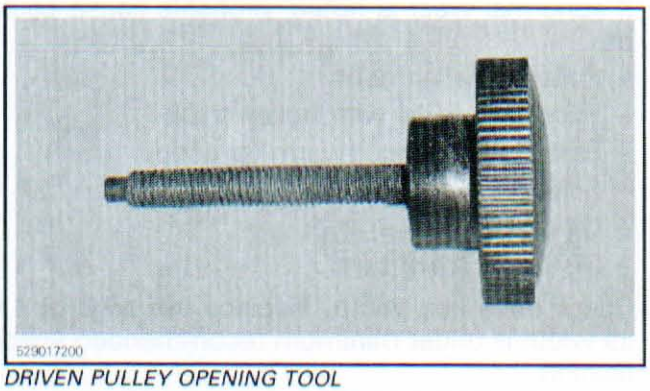

DRIVEN PULLEY OPENING TOOL

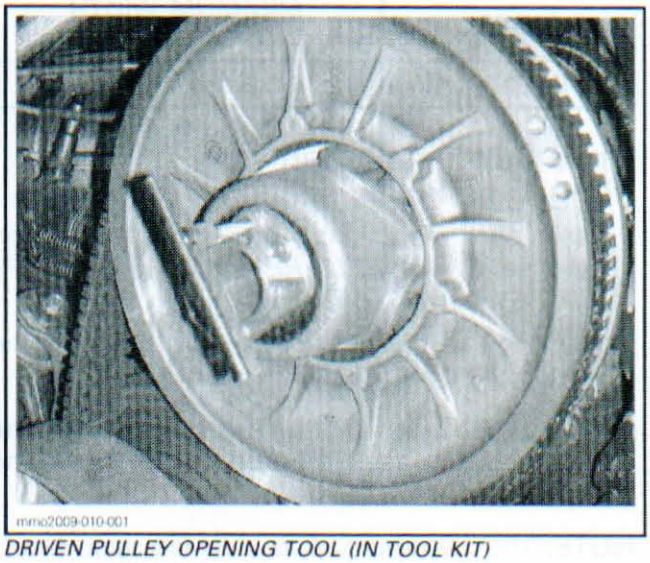

DRIVEN PULLEY OPENING TOOL (IN TOOL KIT)

3. Open the driven pulley by screwing the tool in.
4. To remove belt, slip the belt over the top of driven pulley, then over the drive pulley.

www.midwestmanuals.com

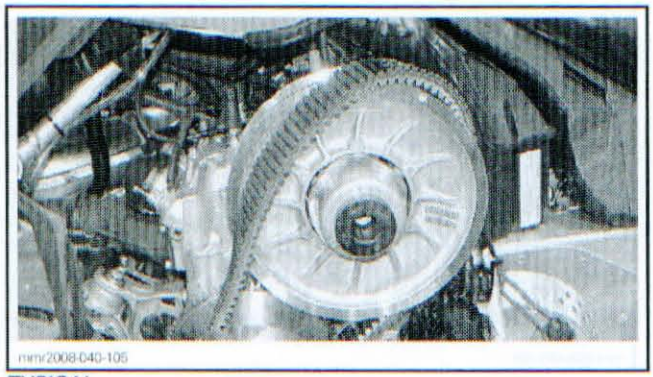
mmr2008-040-105
TYPICAL

Drive Belt Inspection

Inspect belt for:
- Cracks
- Fraying
- Abnormal wear (uneven wear, wear on one side, missing cogs, cracked fabric).

If abnormal wear is noted, probable cause could be:
- Pulley misalignment
- Excessive RPM with frozen track
- Fast starts without warm-up period
- Scratched or rusty sheave
- Oil on belt
- Distorted spare belt.

Check drive belt width. Replace the drive belt if its width is under minimum recommended specification.

MODEL	MINIMUM WIDTH (WEAR LIMIT)
All REV-XR 1200	35.9 mm (1.413 in)

Drive Belt Installation (Ring Type Pulley Adjuster)

1. Make sure the driven pulley is opened. If not, refer to *DRIVE BELT REMOVAL (RING TYPE PULLEY ADJUSTER)* above.
2. Place the belt inside drive pulley, then slip the top of belt over the driven pulley.

NOTICE Do not force or use tools to pry the belt into place, as this could cut or break the cords in the belt.

NOTE: The maximum drive belt life span is obtained when the arrows on the drive belt are directed toward the front of vehicle. This will ensure that correct direction of rotation is respected.

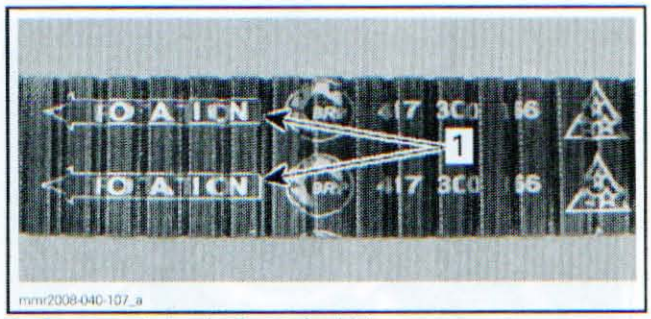

mmr2008-040-107_a
1. *Arrows pointing the front of vehicle*

3. Adjust the drive belt height. Refer to *DRIVE BELT HEIGHT ADJUSTMENT (RING TYPE PULLEY ADJUSTER)* and follow steps 4 to 10.

Drive Belt Installation (Screw Type Pulley Adjuster)

1. Make sure the driven pulley is opened. If not, refer to *DRIVE BELT REMOVAL (SCREW TYPE PULLEY ADJUSTER)*.
2. Set the drive belt inside drive pulley, then slip the top of belt over the driven pulley.

NOTICE Do not force or use tools to pry the belt into place, as this could cut or break the cords in the belt.

NOTE: The maximum drive belt life span is obtained when the arrow on the drive belt is directed toward the front of the vehicle. This will ensure that correct direction of rotation is respected.

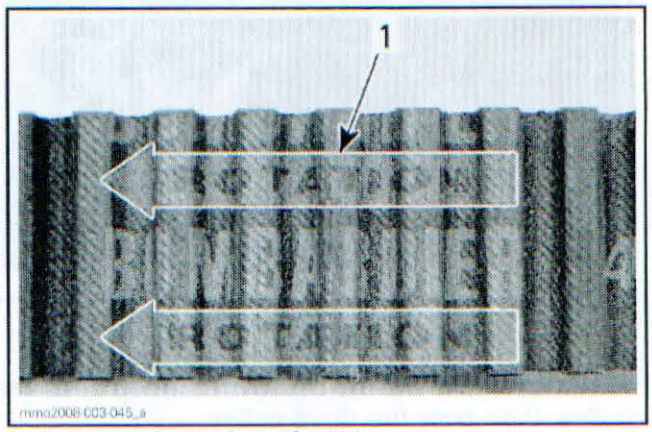

mmr2008-003-045_a
1. *Arrow pointing the front of vehicle*

3. Unscrew and remove the driven pulley opening tool from the pulley.
4. Rotate the driven pulley several times to properly set the belt between the sheaves.
5. Adjust the drive belt height. Refer to *DRIVE BELT HEIGHT ADJUSTMENT (SCREW TYPE PULLEY ADJUSTER)* and follow steps 3 to 8.

www.midwestmanuals.com

Drive Belt Height Adjustment (Ring Type Pulley Adjuster)

NOTE: Adjust drive belt height every time drive belt is installed.

1. Open the LH side panel.
2. Remove the drive belt guard.
3. Using the spark plug tool (included in the tool kit) or an 11/16 in thin wall socket, loosen (± 4 turns) the adjustment ring adapter located inside adjustment ring.

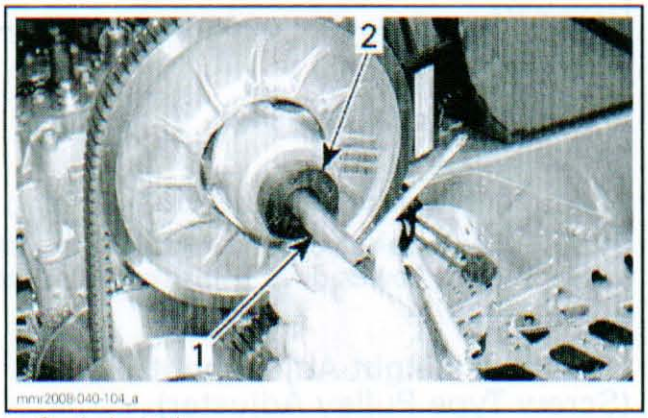

1. *Spark plug tool*
2. *Driven pulley adjustment ring*

4. Using the suspension adjustment tool or the DRIVEN PULLEY OPENING TOOL (P/N 529 036 127), turn the driven pulley adjuster accordingly to achieve the required drive belt height.

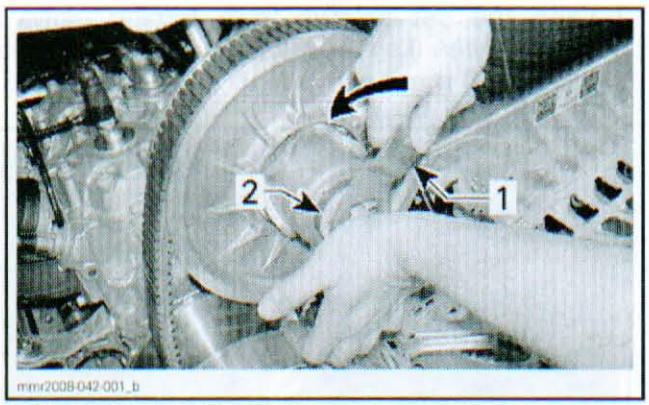

1. *Suspension adjustment tool*
2. *Adjustment ring*

5. Manually rotate drive belt to position it properly inside pulley sheaves.



MANUALLY ROTATE DRIVE BELT

Models with a Mechanical Reverse

Repeat steps 4 and 5 until the bottom of grooves on the external side of drive belt are flush with the driven pulley edges.

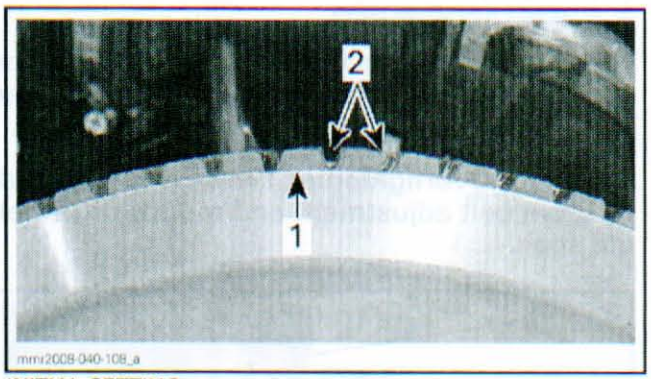

INITIAL SETTING
1. *Driven pulley edge*
2. *External drive belt grooves*

Models with an Electronic Reverse

Repeat steps 4 and 5 until the external side of drive belt is flush with the driven pulley edges.

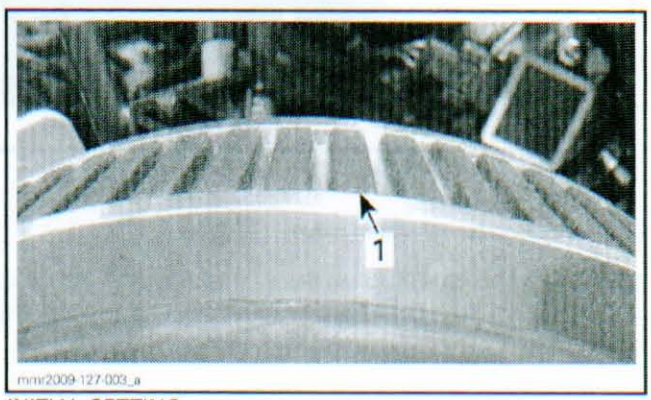

INITIAL SETTING
1. *Flush with driven pulley edge*

www.midwestmanuals.com

All Models

6. When the drive belt is properly positioned, ensure that the swivel ring leans against the driven pulley cam.

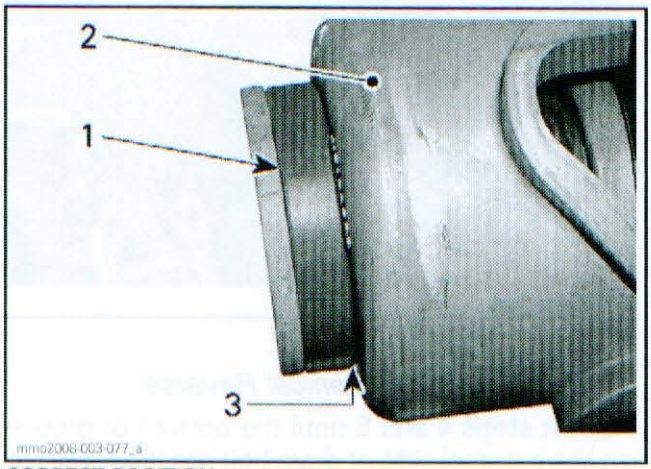

CORRECT POSITION
1. *Swivel ring*
2. *Driven pulley cam*
3. *In contact with driven pulley*

7. If the swivel ring is not in contact with the cam, turn adjustment ring clockwise to lean the swivel ring against the driven pulley cam.

NOTICE **Overtightening swivel ring will modify drive belt adjustment and reduce drive belt life span.**

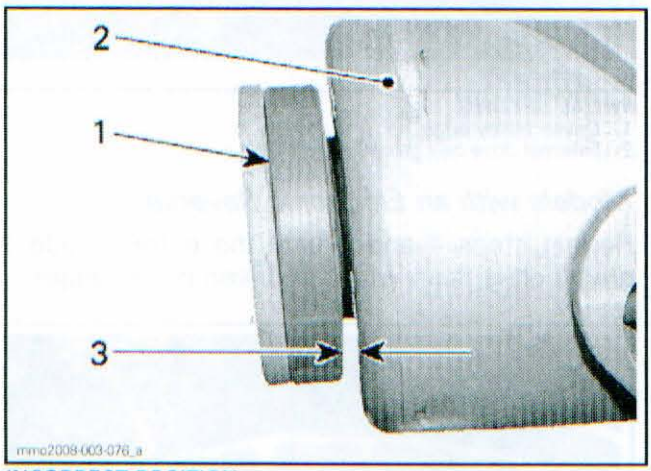

INCORRECT POSITION
1. *Swivel ring*
2. *Driven pulley cam*
3. *Not in contact with driven pulley*

8. Using the spark plug tool (included in the tool kit) or an 11/16 in thin wall socket, snug up the locking nut (± 4 turns).

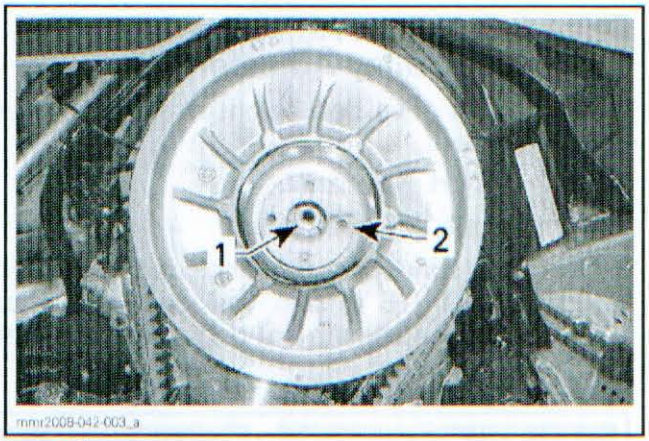

1. *Locking nut*
2. *Adjustment ring*

9. Reinstall the drive belt guard.
10. Close LH side panel.
11. Start engine and check if vehicle is creeping.
    11.1 If vehicle creeps, readjust drive belt height (lower drive belt from initial setting).

Drive Belt Height Adjustment (Screw Type Pulley Adjuster)

NOTE: The drive belt height adjustment must be performed every time a new belt is installed.

To adjust the drive belt height, proceed as follows:

1. Open the LH side panel.
2. Remove the drive belt guard.
3. Keep the set screws from turning using a 3 mm Allen key and loosen both lock nuts using a 10 mm open wrench.

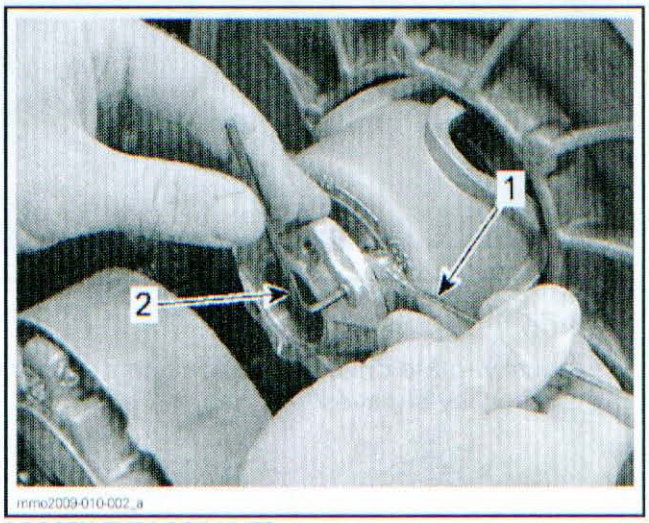

LOOSEN THE LOCK NUTS
1. *3 mm Allen key*
2. *10 mm open wrench*

www.midwestmanuals.com

4. Turn one set screw 1/4 turn at a time then rotate the driven pulley to properly set the belt between the pulley sheaves. Repeat until the belt reaches the recommended height.

NOTE: Turning the set screws clockwise lowers the belt in the pulley. Turning the set screws counterclockwise raises the belt in the pulley.

Models with a Mechanical Reverse

The bottom of grooves on the external side of drive belt should reach the driven pulley edges.

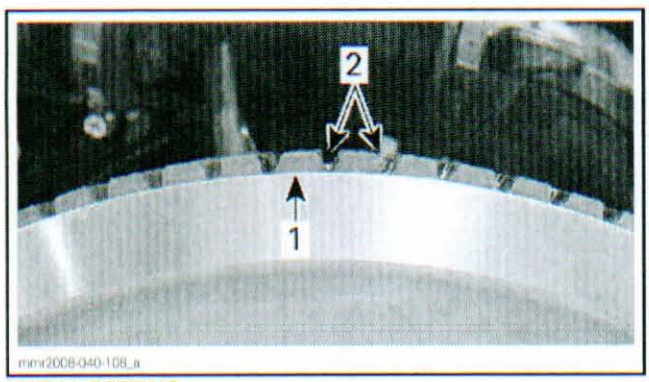

INITIAL SETTING
1. *Driven pulley edge*
2. *External drive belt grooves*

Models with an Electronic Reverse

The external side of drive belt should be flushed with the driven pulley edges.

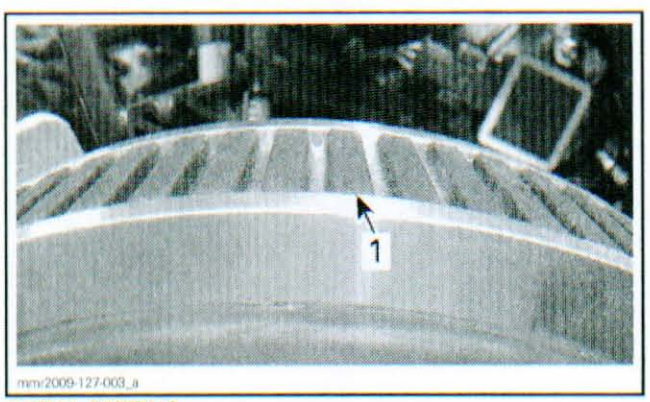

INITIAL SETTING
1. *Flush with driven pulley edge*

All Models

5. Set the other set screw so that it rests on the steel ring.

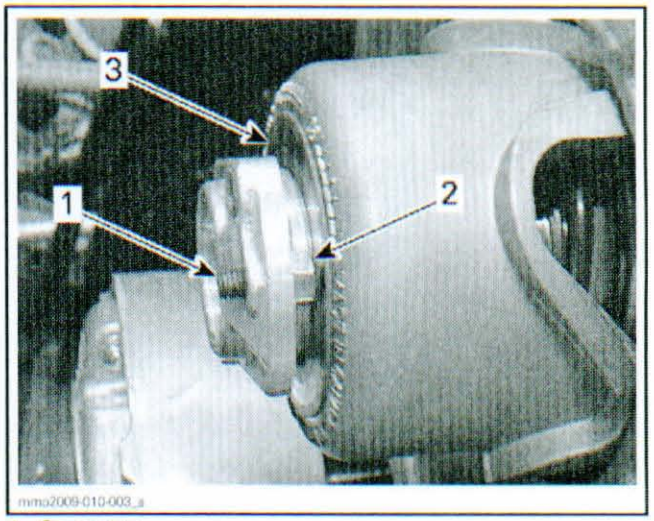

1. *Set screw*
2. *Lock nut*
3. *Steel ring*

6. Keep the set screws from turning and tighten the lock nuts towards the adjuster hub to 5 N•m (44 lbf•**in**)
7. Install the drive belt guard.
8. Close side panel.
9. Start engine and check if vehicle is creeping.
   9.1 If vehicle creeps, readjust drive belt height (lower drive belt from initial setting).

www.midwestmanuals.com

www.midwestmanuals.com

DRIVE PULLEY

SERVICE TOOLS

Description	Part Number	Page
DRIVE PULLEY HOLDER	529 035 674	307–308, 316
DRIVE PULLEY PULLER	529 022 400	307
PULLEY SPRING COMPRESSOR TOOL	529 036 012	309, 311, 313–314
SLIDER SHOE FORK	529 005 500	308, 314
SLIDING HALF BUSHING REMOVER/INSTALLER	529 035 931	311, 313
SMALL BUSHING PULLER/LARGE INSTALLER	529 031 200	311

SERVICE PRODUCTS

Description	Part Number	Page
LOCTITE 680	293 800 114	313
PULLEY FLANGE CLEANER	413 711 809	311, 316

www.midwestmanuals.com

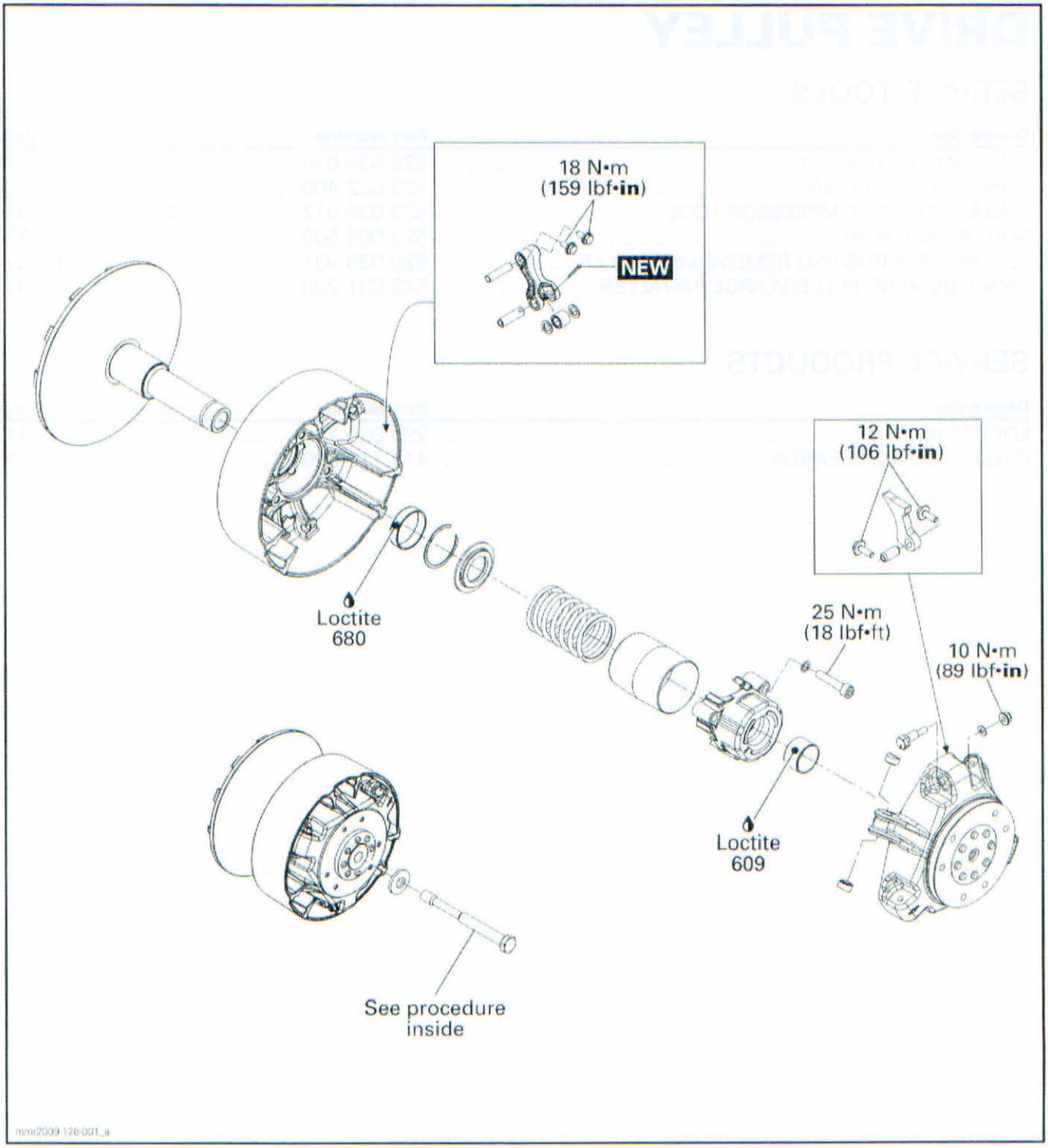

www.midwestmanuals.com

GENERAL

TRA drive pulley stands for **Total Range Adjustable** drive pulley.

These are lubrication free drive pulleys. Do not lubricate any component.

Always refer to appropriate *PARTS CATALOG* for replacement part.

Most parts of TRA IV are not interchangeable with those of the other TRA pulley type.

NOTICE **Never use any type of impact wrench at drive pulley removal and installation. The use of impact wrench could damage the drive pulley and modify the calibration.**

Some drive pulley components (return spring, ramp) can be changed to improve vehicle performance in high altitude regions. A Service Bulletin gives information about calibration according to altitude.

NOTICE **Such modifications should only be performed by experienced mechanics since they can greatly affect vehicle performance. Verify spring specifications before installation. Do not only refer to the spring color code.**

⚠ WARNING

Any drive pulley repairs must be performed by an authorized Ski-Doo dealer. Subcomponent installation and assembly tolerances require strict adherence to procedures detailed.

During assembly/installation, use torque values and service products as in the exploded view.

Clean threads before applying a threadlocker. Refer to *SELF-LOCKING FASTENERS* and *LOCTITE APPLICATION* at the beginning of this manual for complete procedure.

⚠ WARNING

Torque wrench tightening specifications must be strictly adhered to.
Locking devices (e.g.: locking tabs, elastic stop nuts, cotter pins, etc.) must be replaced with new ones.

PROCEDURES

DRIVE PULLEY

Drive Pulley Removal

Remove drive belt. Refer to *DRIVE BELT* subsection.

Secure drive pulley with the DRIVE PULLEY HOLDER (P/N 529 035 674). Install it over a sliding sheave tower.

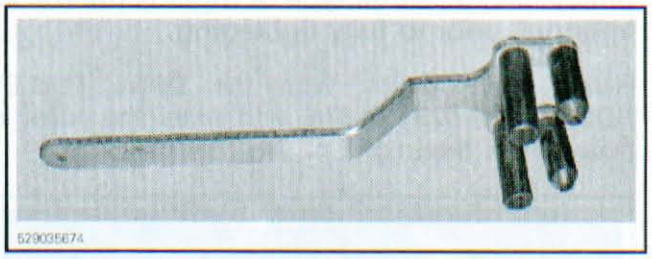

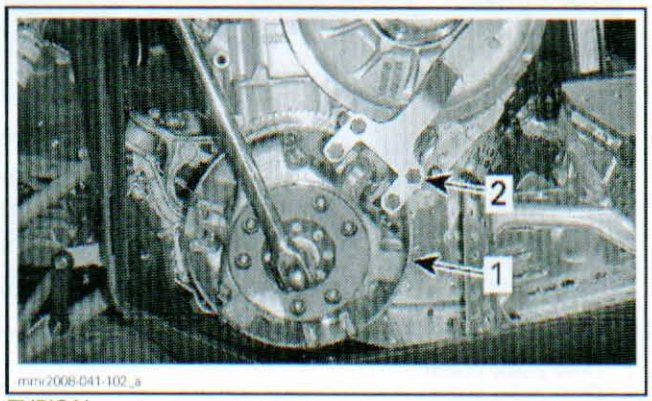

TYPICAL
1. *Drive pulley*
2. *Drive pulley holder*

Remove the drive pulley bolt and its conical spring washer.

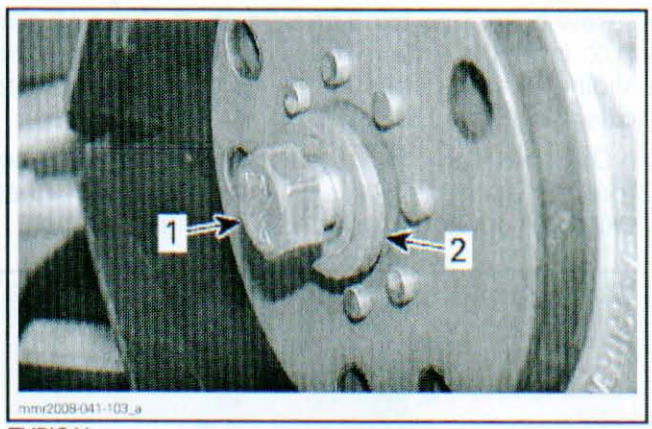

TYPICAL
1. *Drive pulley bolt*
2. *Conical spring washer*

To remove drive pulley from engine, use the DRIVE PULLEY PULLER (P/N 529 022 400).

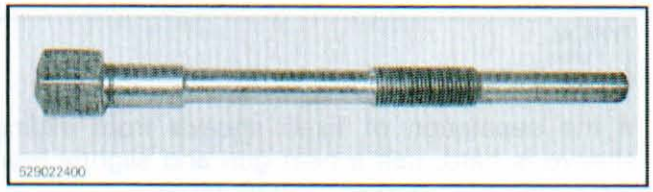

www.midwestmanuals.com

NOTICE These pulleys have metric threads. Do not use imperial threads puller. Always tighten puller by hand to ensure that the drive pulley has the same type of threads (metric vs imperial) prior to fully tightening.

Retain drive pulley with the DRIVE PULLEY HOLDER (P/N 529 035 674), and install the puller in pulley shaft then tighten.

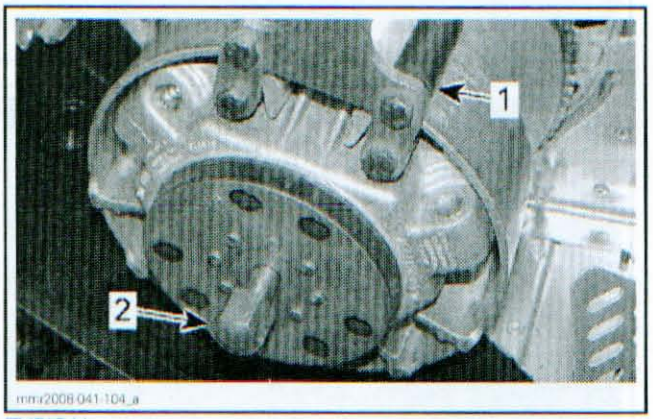

TYPICAL
1. *Drive pulley holder*
2. *Drive pulley puller*

Drive Pulley Disassembly

NOTICE NEVER tap on governor cup.

To separate fixed sheave from sliding sheave, screw puller into fixed sheave shaft about 13 mm (1/2 in). Raise drive pulley and hold it by the sliding sheave while knocking on puller head to disengage fixed sheave.

NOTE: No components marking is required before disassembling this drive pulley since it has factory mark and arrows as indexing reference.

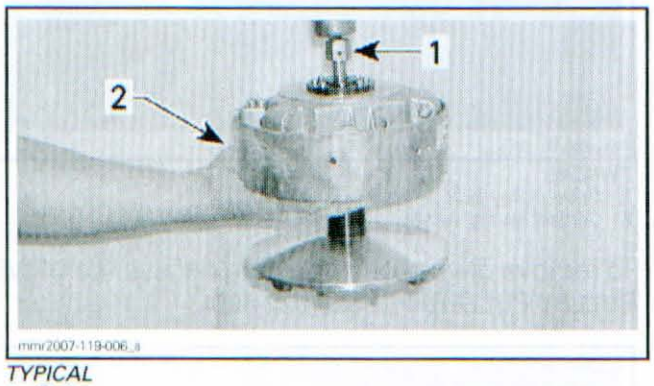

TYPICAL
1. *Puller*
2. *Holding sliding sheave*

If the separation of fixed sheave from sliding sheave is hard, use a heat gun and slightly heat the governor cup to expand its taper.

NOTICE Never use any type of torch to heat governor cup.

Slider Shoes and Governor Cup

Carefully lift governor cup until slider shoes come at their highest position into guides.

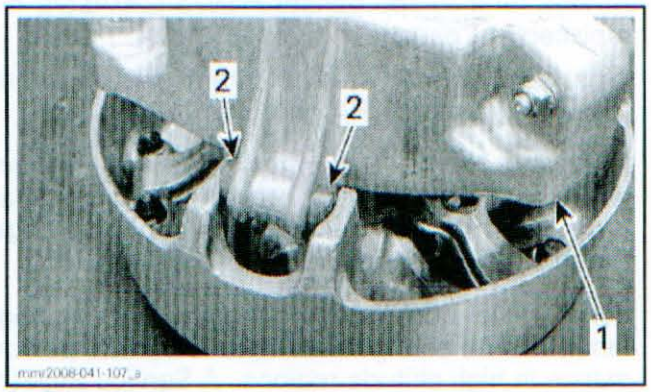

1. *Governor cup*
2. *Slider shoes*

Hold a slider shoe set then carefully lift its housing and install a SLIDER SHOE FORK (P/N 529 005 500). Proceed the same way for other housings lifting one at a time.

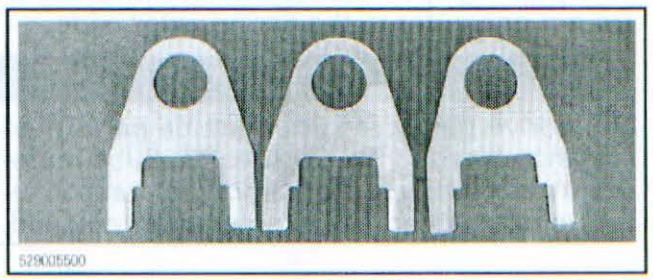

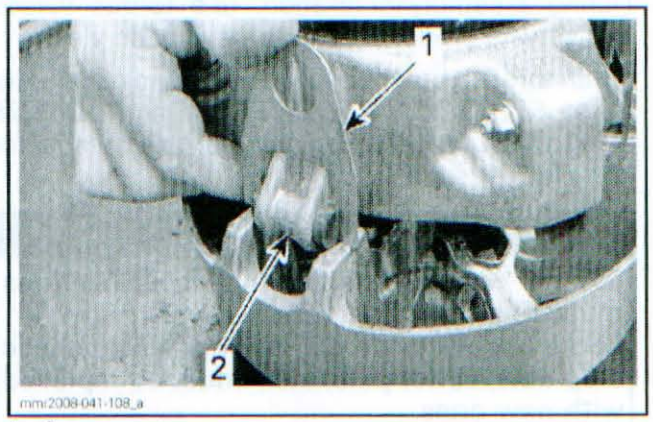

1. *Governor cup*
2. *Slider shoe forks*

When all slider shoes are held with the forks, remove the governor cup.

www.midwestmanuals.com

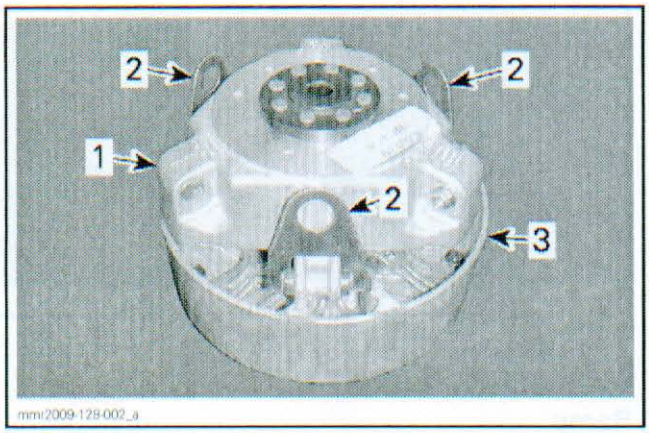

1. *Governor cup*
2. *Slider shoe forks*
3. *Sliding sheave*

Spring Cover

To remove the spring cover, always use the PULLEY SPRING COMPRESSOR TOOL (P/N 529 036 012). The spring cover is under high clutch spring preload.

⚠ WARNING

Clutch spring is very strong. Never attempt to remove spring cover without the recommended tools.

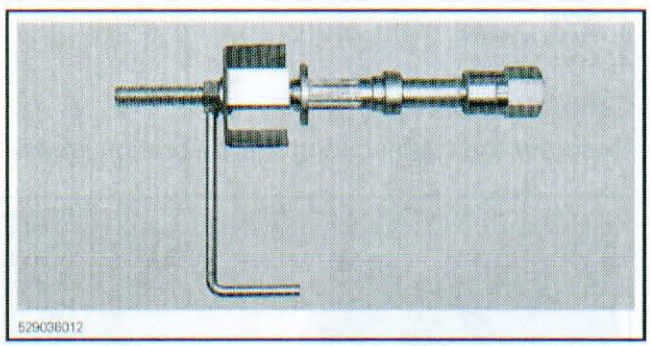

Install support guide of spring compressor in a vice.

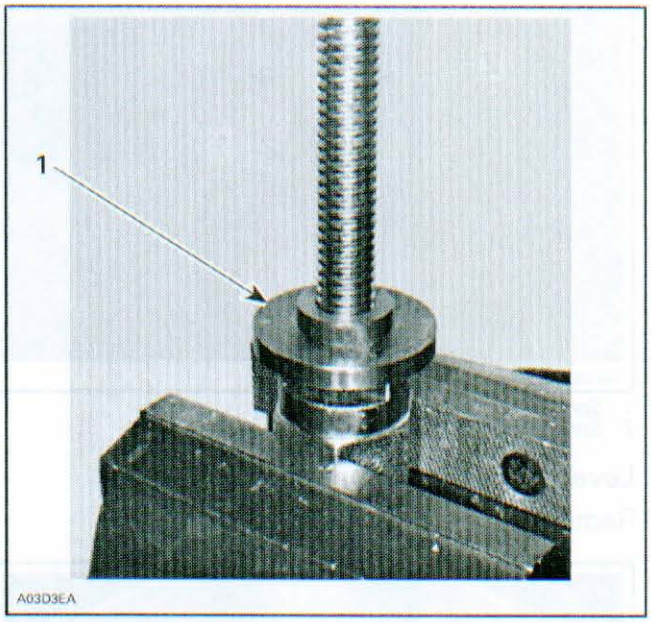

1. *Support guide*

NOTE: The support guide will prevent bushing damages.

Install sliding sheave then the support cup over spring cover.

Remove 3 Allen screws retaining spring cover then unscrew compressor.

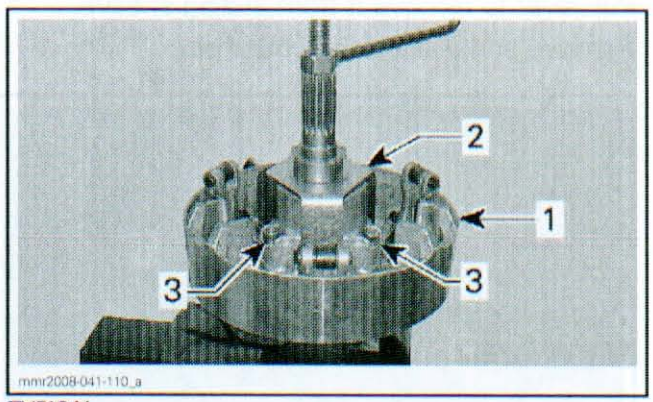

TYPICAL
1. *Sliding sheave*
2. *Support cup*
3. *Spring cover screws*

Remove spring cover, spring and spring seat.

www.midwestmanuals.com

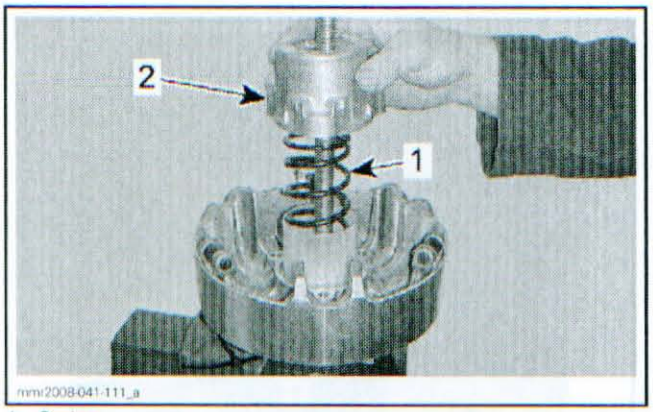

1. *Spring*
2. *Spring cover*

Lever, Roller and Pin

Remove lever screws.

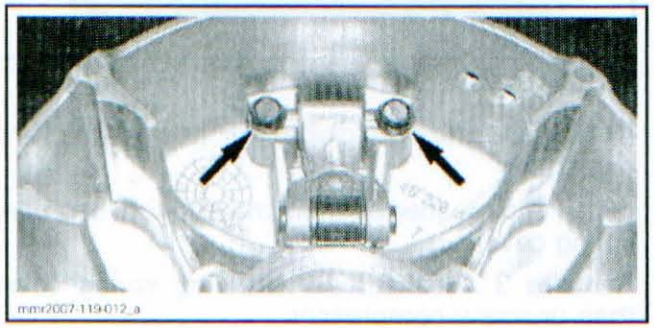

Pull lever to remove it from sliding sheave.

Remove and discard the cotter pin.

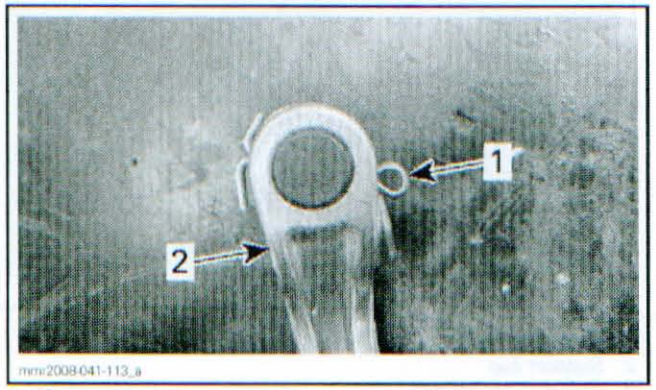

1. *Cotter pin*
2. *Lever*

Remove pin, thrust washers and roller.

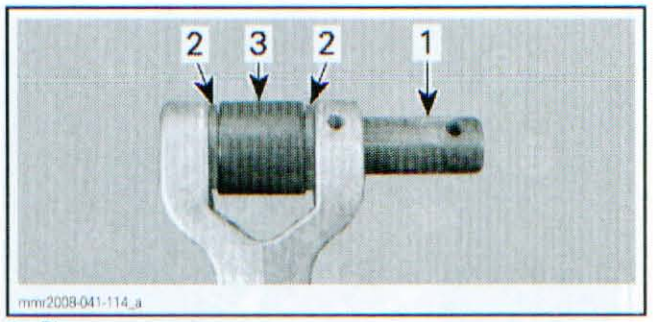

1. *Pin*
2. *Thrust washers*
3. *Roller*

Ramp

Turn the governor cup up side down.

Remove screws retaining ramp to governor cup.

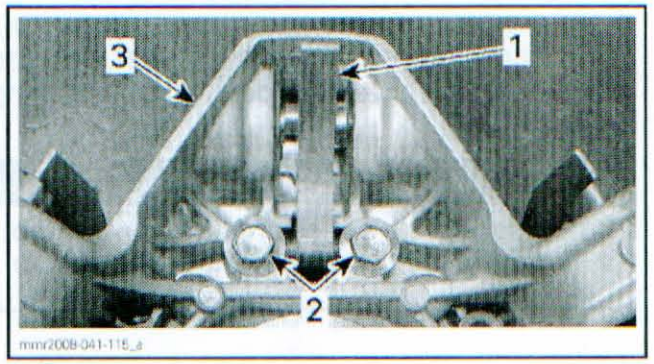

1. *Ramp*
2. *Ramp screws*
3. *Governor cup*

Calibration Screw

Unscrew the nut securing the calibration screw.

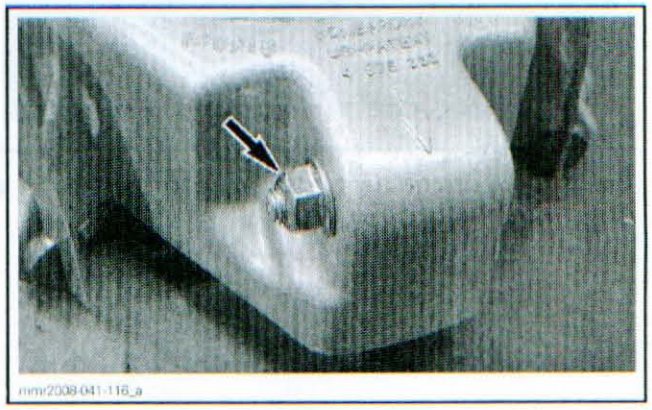

Remove calibration screw and its washer.

www.midwestmanuals.com

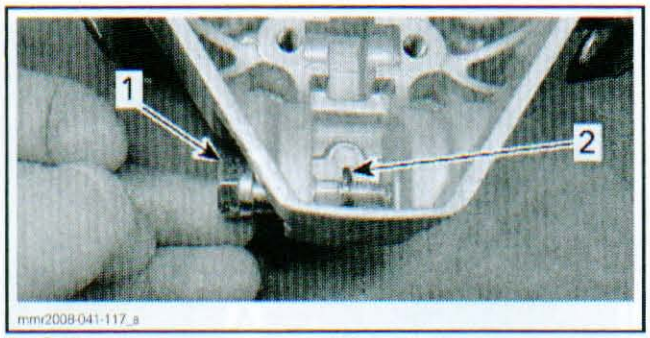

1. Calibration screw
2. Washer

Sliding Sheave Bushing Removal

NOTE: In case of worn out bushing, it is advisable to replace whole sliding sheave assembly as replacing just the bushing may reduce the drive pulley performance.

If bushing is out of specifications, remove it as follows:

1. Remove circlip from the sliding sheave.

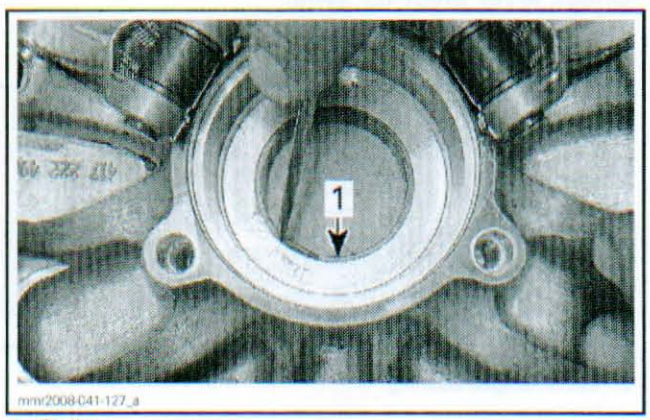

1. Circlip

2. Secure the PULLEY SPRING COMPRESSOR TOOL (P/N 529 036 012) in a vice.
3. Mount the SMALL BUSHING PULLER/LARGE INSTALLER (P/N 529 031 200) and the sliding sheave assembly on it.

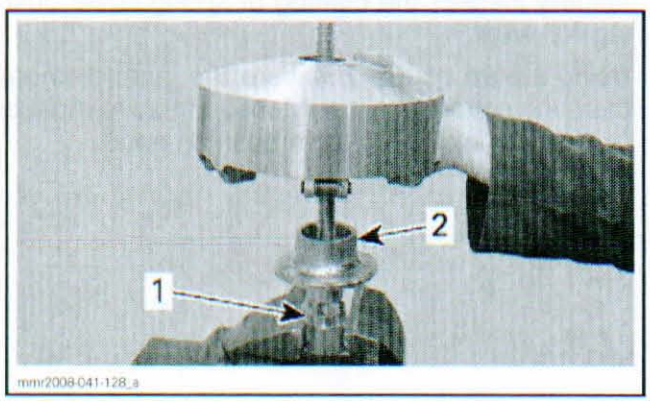

1. Spring compressor
2. Bushing remover/installer

4. Use the SLIDING HALF BUSHING REMOVER/INSTALLER (P/N 529 035 931) to press out old bushing.

NOTE: Make sure to use the tool as marked; to remove the bushing press using the side marked "OUT", as shown below in the picture.



5. Use a soft sand paper to clean sliding sheave bushing mounting surface.



6. Clean sliding sheave bushing mounting surface with PULLEY FLANGE CLEANER (P/N 413 711 809).
7. Clean the circlip groove.

Drive Pulley Cleaning

Parts must be at room temperature before cleaning.

Clean pulley sheaves and shaft with fine steel wool and dry cloth.

Using a paper towel with PULLEY FLANGE CLEANER (P/N 413 711 809), clean crankshaft tapered end and the taper inside the fixed sheave of the drive pulley, crankshaft threads and retaining screw threads.

NOTICE **Avoid contact between cleaner and crankshaft seal because damage may occur.**

www.midwestmanuals.com

Remove all hardened oil deposits that have baked on crankshaft and pulley tapered surfaces with coarse or medium steel wool and/or sand paper no. 600.

NOTICE Do not use any other type of abrasive.

Reclean mounting surfaces with paper towel and cleaning solvent.

Wipe off the mounting surfaces with a clean, dry paper towel.

NOTICE Mounting surfaces must be free of any oil, cleaner or towel residue.

Drive Pulley Inspection

NOTE: During inspection, replace any component if found defective or out of specifications.

Fixed Sheave and Governor Cup

Inspect fixed sheave for marks or scratches.

Slider Shoes

Check slider shoes for wear. Replace if groove is not apparent on top.

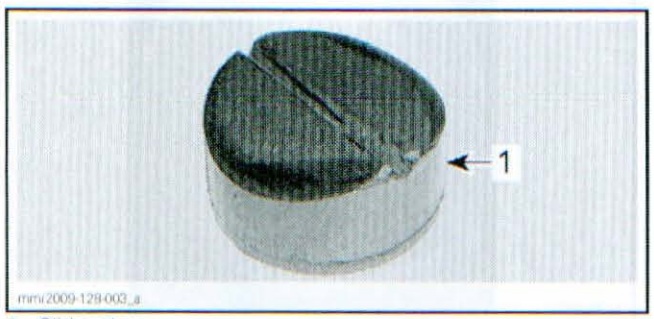

1. Slider shoe

Sliding Sheave

Inspect pulley sheave for marks or scratches.

Visually inspect coating of bushings.

Using a bore gauge, measure the inner diameter of sliding sheave bushing. Measuring point must be at least 5 mm (1/4 in) from bushing edge.

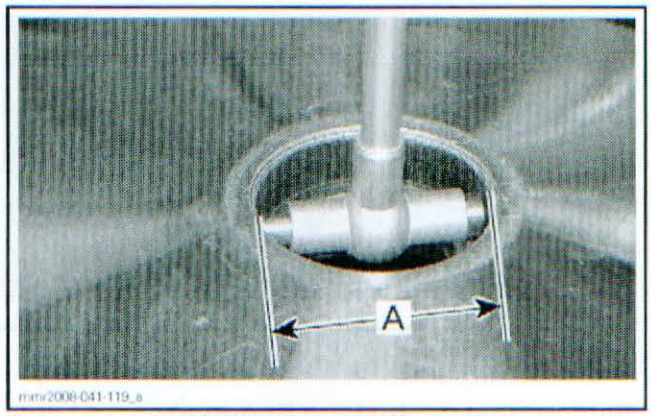

A. Inner diameter of sliding sheave bushing

SLIDING SHEAVE BUSHING	
Service limit	40.3 mm (1.587 in)

Lever, Roller and Pin

Check levers for cracks, distortion or other damages.

Check lever pivot for wear.

Check lever flanged bushing for wear.

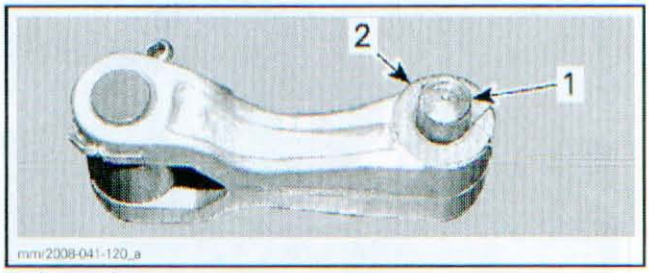

1. Lever pivot
2. Lever flanged bushing

Check rollers for roundness of external diameter.

Check thrust washers for thickness wear.

Check roller pins for wear.

Spring Cover

Check spring cover for cracks or wear.

Visually inspect the coating of spring cover bushing for wear.

Using a bore gauge, measure the inner diameter of spring cover bushing. Measuring point must be at least 5 mm (1/4 in) from bushing edge.

www.midwestmanuals.com

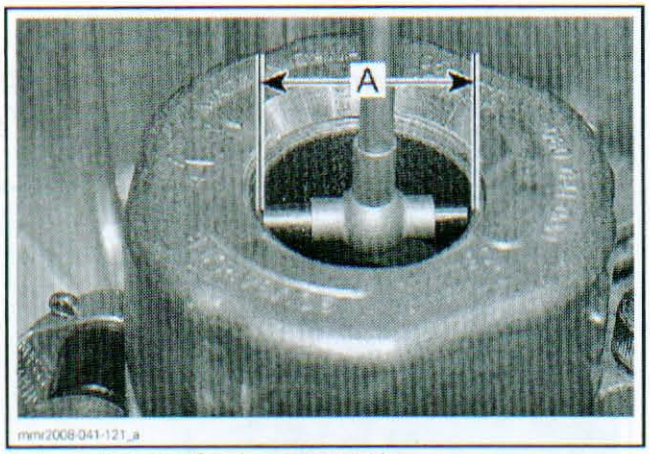

A. Inner diameter of spring cover bushing

SPRING COVER BUSHING	
Service limit	30.4 mm (1.197 in)

Replace the spring cover if the inner diameter of bushing is out of specification.

Spring Inspection

Check spring color code and its free length. Replace if necessary.

DRIVE PULLEY SPRING		
MODEL	COLOR CODE	FREE LENGTH
GSX and GTX	YL/BU	90.7 mm (3-9/16 in)
MX Z	BU/BU	99.8 mm (3-15/16 in)

Drive Pulley Assembly

Sliding Sheave Bushing Installation

To install a **NEW** bushing, secure the PULLEY SPRING COMPRESSOR TOOL (P/N 529 036 012) in a vice and mount the sliding sheave.

Apply LOCTITE 680 (P/N 293 800 114) on the outside of bushing face.

Insert the bushing from inner side of sliding sheave.

Mount the SLIDING HALF BUSHING REMOVER/INSTALLER (P/N 529 035 931) with side marked "IN" to press in a new bushing.

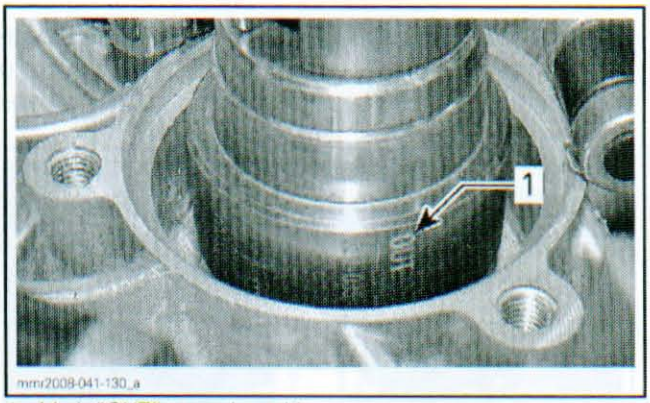

1. Mark "OUT" toward outside

NOTE: Make sure that the bushing is well seated on the sliding sheave.

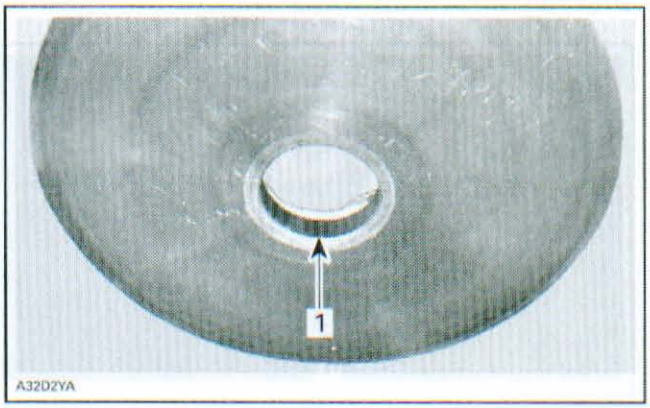

1. Bushing

Install the circlip.

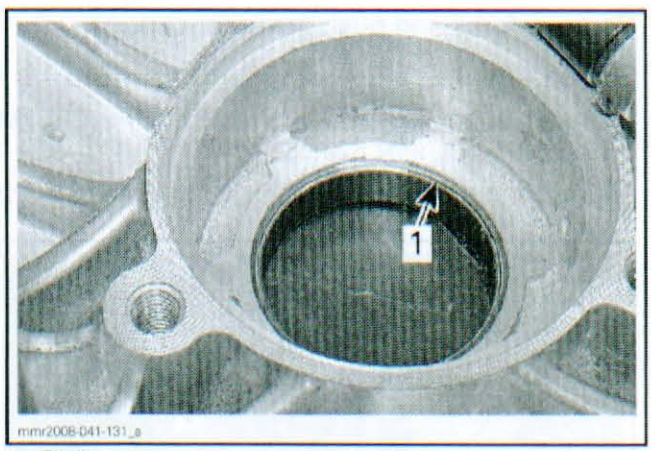

1. Circlip

NOTICE **Make sure that the circlip is properly position in its groove.**

Sliding Sheave, Slider Shoes and Governor Cup

Insert slider shoes into governor cup so that groove in each slider shoe is vertical to properly slide in guides.

www.midwestmanuals.com

Install a SLIDER SHOE FORK (P/N 529 005 500) into slider shoe grooves to maintain them for governor cup installation. Proceed on 3 set of slider shoes.

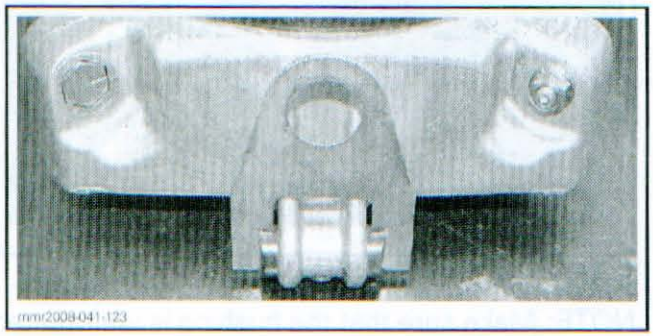

Make sure to align governor cup arrow with sliding sheave mark.

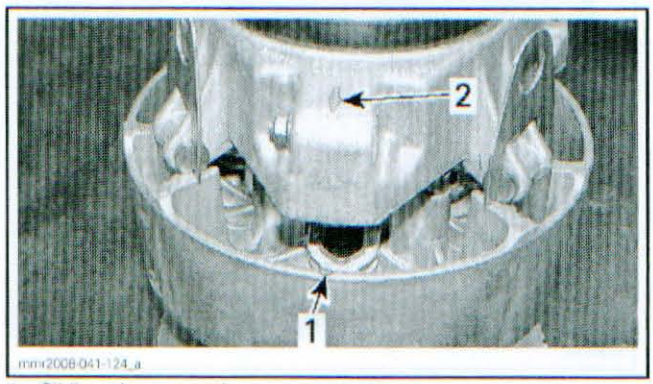

1. *Sliding sheave mark*
2. *Governor cup arrow*

Carefully slide governor cup into sliding sheave.

Remove forks and push governor cup.

Spring Cover

To install spring cover, use PULLEY SPRING COMPRESSOR TOOL (P/N 529 036 012).

Align spring cover arrow with sliding sheave mark.

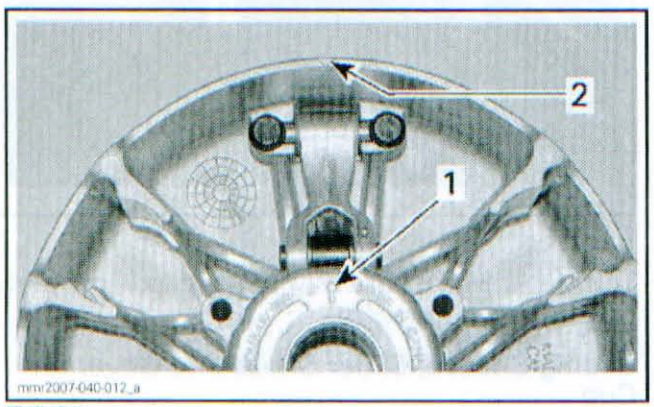

TYPICAL
1. *Spring cover arrow*
2. *Sliding sheave mark*

Tighten screws to 25 N•m (18 lbf•ft).

Lever, Roller and Pin

Always use the same type of pin as originally installed when servicing. Refer to *TECHNICAL SPECIFICATIONS*.



SOLID PIN

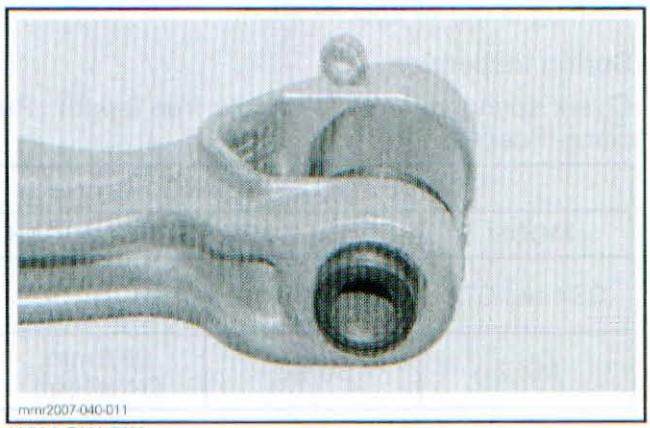

HOLLOW PIN

NOTE: Different types have different weights for calibration purpose. Refer to *HIGH ALTITUDE BULLETIN*.

While installing lever make sure that the curved sides of the levers are outwards as shown.

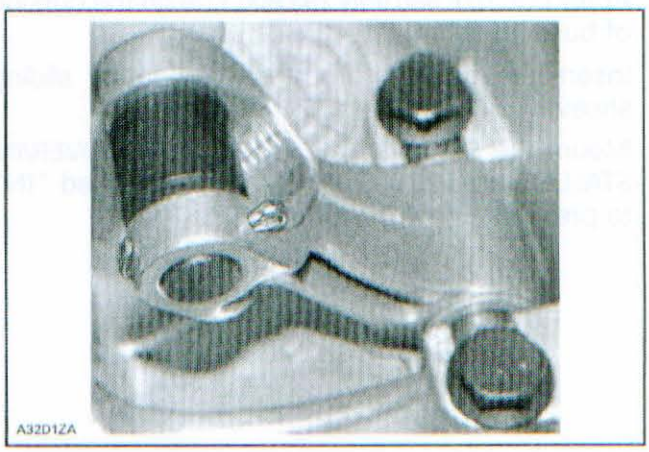

www.midwestmanuals.com

Always install lever assemblies so cotter pin heads are oriented on top when lever is set at the bottom of sliding sheave.

Bend cotter pin ends to sit perfectly against lever.

⚠ WARNING

Whenever replacing centrifugal levers, always replace all 3 at the same time. Otherwise, drive pulley unbalance will occur because of levers difference.

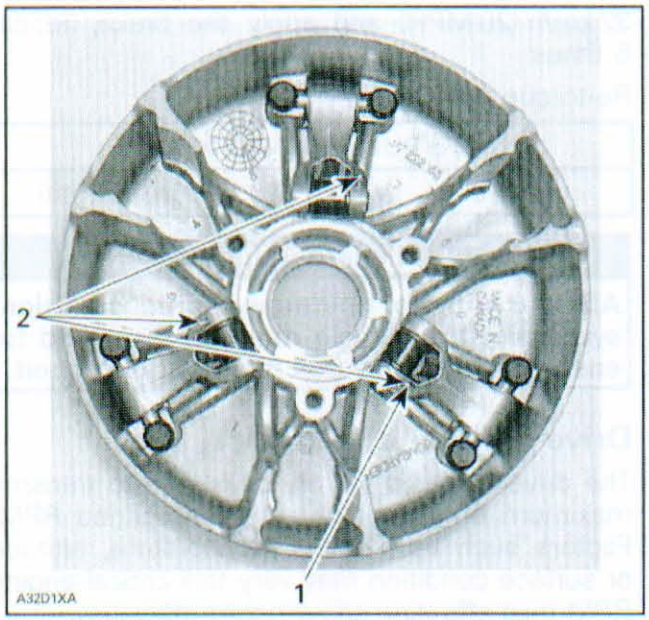

1. Cotter pin head on top
2. All on the same side

Torque lever screws to 18 N•m (159 lbf•**in**).

NOTICE Levers and rollers must move easily after installation.

Ramp

Insert dowel tube from chamfered side.

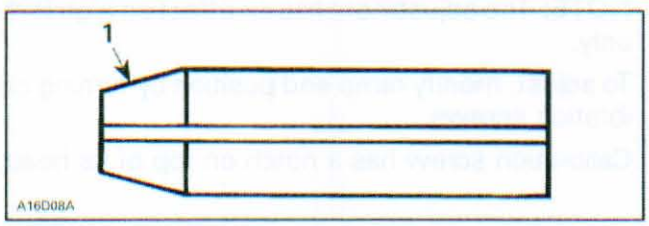

1. Chamfered side

Position dowel tube split at the angle "A".

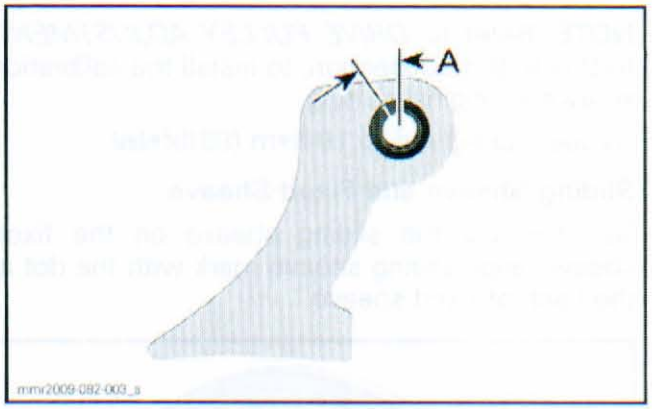

MODEL	ANGLE "A"
TRA IV	45 ± 3°

Make sure ramp is centered on dowel tube.

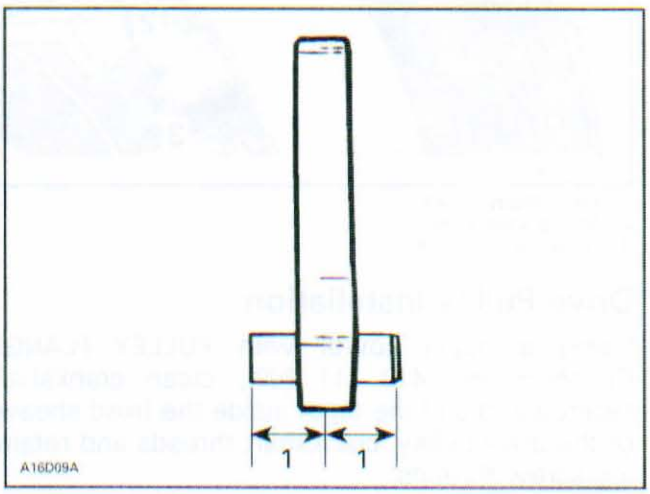

1. Equal distance

Torque ramp screws to 12 N•m (106 lbf•**in**).

Calibration Screw

When installing calibration screw, make sure to install washer as shown.

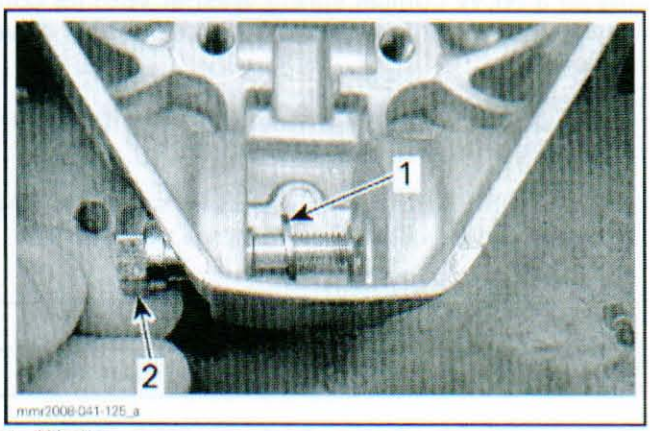

1. Washer
2. Calibration screw

www.midwestmanuals.com

NOTE: Refer to *DRIVE PULLEY ADJUSTMENT*, further in this subsection, to install the calibration screws in original setting.

Torque locking nut to 10 N•m (89 lbf•**in**).

Sliding Sheave and Fixed Sheave

To assemble the sliding sheave on the fixed sheave, align sliding sheave mark with the dot at the back of fixed sheave.

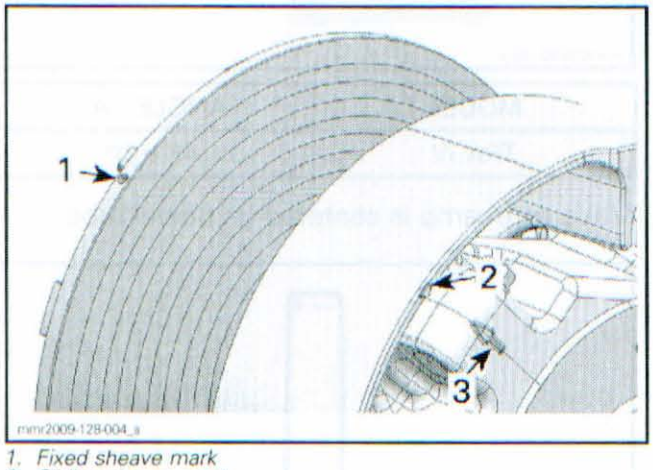

1. *Fixed sheave mark*
2. *Sliding sheave mark*
3. *Governor cup mark*

Drive Pulley Installation

Using a paper towel with PULLEY FLANGE CLEANER (P/N 413 711 809), clean crankshaft tapered end and the taper inside the fixed sheave of the drive pulley, crankshaft threads and retaining screw threads.

NOTICE **Do not apply antiseize or any lubricant on crankshaft and drive pulley tapers. Mounting surfaces must be free of any oil, cleaner or towel residue.**

Install drive pulley on crankshaft extension.

Install a **NEW** conical spring washer with its concave side towards drive pulley then install drive pulley bolt.

NOTICE **Always use BRP genuine parts for conical spring washer and bolt.**

Use the DRIVE PULLEY HOLDER (P/N 529 035 674) to retain drive pulley. See removal procedure.

Torque drive pulley bolt.

DRIVE PULLEY FIRST TORQUE	
TRA IV	120 N•m (89 lbf•ft)

Before starting engine, perform drive pulley adjustment, see further in this subsection.

Install drive belt and guard.

Raise the rear of the vehicle and support it with a mechanical stand.

⚠ WARNING

Ensure that the track is free of particles which could be thrown out while track is rotating. Keep hands, tools, feet and clothing clear of track. Ensure nobody is standing near the vehicle.

Accelerate the vehicle at low speed (maximum 32 km/h (20 MPH) and apply the brake, repeat 5 times.

Re-torque drive pulley bolt.

DRIVE PULLEY FINAL TORQUE	
TRA IV	120 N•m (89 lbf•ft)

⚠ WARNING

After 10 hours of operation the transmission system of the vehicle must be inspected to ensure drive pulley bolt is properly torqued.

Drive Pulley Adjustment

The drive pulley is factory calibrated to transmit maximum engine power at a predefined RPM. Factors such as ambient temperature, altitude or surface condition may vary this critical engine RPM thus affecting snowmobile efficiency.

This adjustable drive pulley allows setting maximum engine RPM in the vehicle to maintain maximum power. Refer to *ENGINE MANAGEMENT SYSTEM* for engine RPM adjustment.

Calibration screws should be adjusted so that actual maximum engine RPM in vehicle matches the maximum horsepower RPM given in *TECHNICAL SPECIFICATIONS*.

NOTE: The adjustment has an effect on high RPM only.

To adjust, modify ramp end position by turning calibration screws.

Calibration screw has a notch on top of its head.

www.midwestmanuals.com

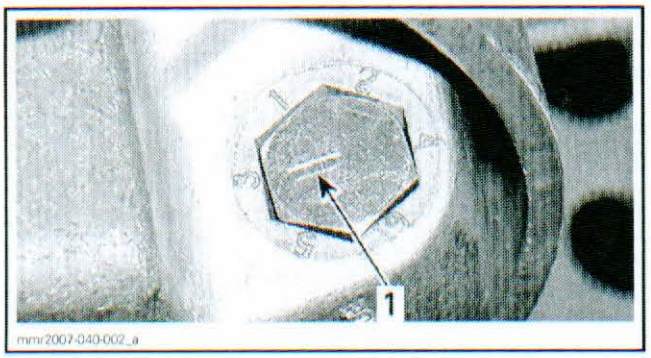

1. Notch

Governor cup has 6 positions numbered 1 to 6.

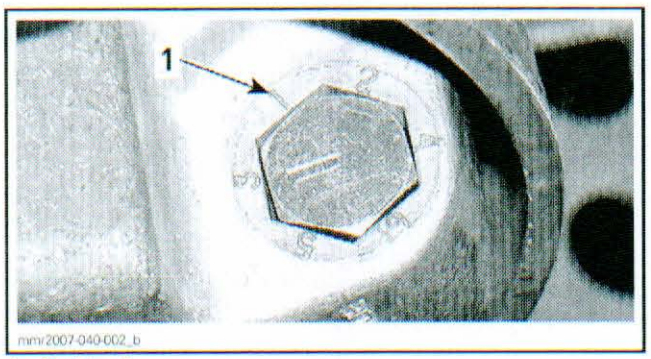

1. Position 1

See the following table for original setting.

CALIBRATION SCREW	
MODEL	POSITION
All	3

Each number modifies maximum engine RPM by about 200 RPM.

Lower numbers decrease engine RPM in steps of 200 RPM and higher numbers increase it in steps of 200 RPM.

Example:

Calibration screw is set at position 3 and is changed to position 5. So maximum engine RPM is increased by about 400 RPM.

To Adjust:

Just loosen locking nut enough to pull calibration screw **partially** out. Do not completely remove the locking nut.

NOTICE **Do not completely remove calibration screw otherwise its inside washer will fall off.**

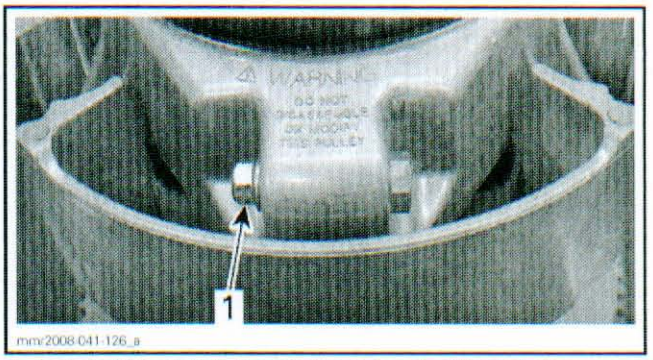

1. Loosen just enough to permit rotating of calibration screw

Adjust to desired position.

NOTICE **Always adjust all 3 calibration screws and make sure they are all set at the same number.**

Torque locking nuts to 10 N•m (89 lbf•**in**).

Midwest Manuals
sales@midwestmanuals.com
www.midwestmanuals.com

www.midwestmanuals.com

www.midwestmanuals.com

DRIVEN PULLEY AND COUNTERSHAFT

SERVICE TOOLS

Description	Part Number	Page
CHAINCASE GEAR RETAINING TOOL	529 036 152	322
COUNTERSHAFT BEARING INSTALLER	529 036 066	331
COUNTERSHAFT BEARING REMOVER	529 036 065	330
COUNTERSHAFT RETAINING TOOL	529 036 165	328
COUNTERSHAFT SUPPORT	529 036 067	330
DRIVEN PULLEY SPRING COMPRESSOR	529 036 064	324
ENGINE LIFTING TOOL	529 036 151	331
PRELOAD TESTER	529 036 164	328
QRS HUB TORQUING TOOL	529 036 147	323, 330

SERVICE TOOLS – OTHER SUPPLIER

Description	Part Number	Page
FISH SCALE	N. A.	328
ROTOR CLIP® APPLICATOR	A-150	327

SERVICE PRODUCTS

Description	Part Number	Page
LOCTITE 243 (BLUE)	293 800 060	330
LOCTITE 609	413 703 100	331
LOCTITE 767 (ANTISEIZE LUBRICANT)	293 800 070	329
LOCTITE PRIMER N	293 800 041	330
PULLEY FLANGE CLEANER	413 711 809	326, 331

www.midwestmanuals.com

DRIVEN PULLEY (RING TYPE PULLEY ADJUSTER)

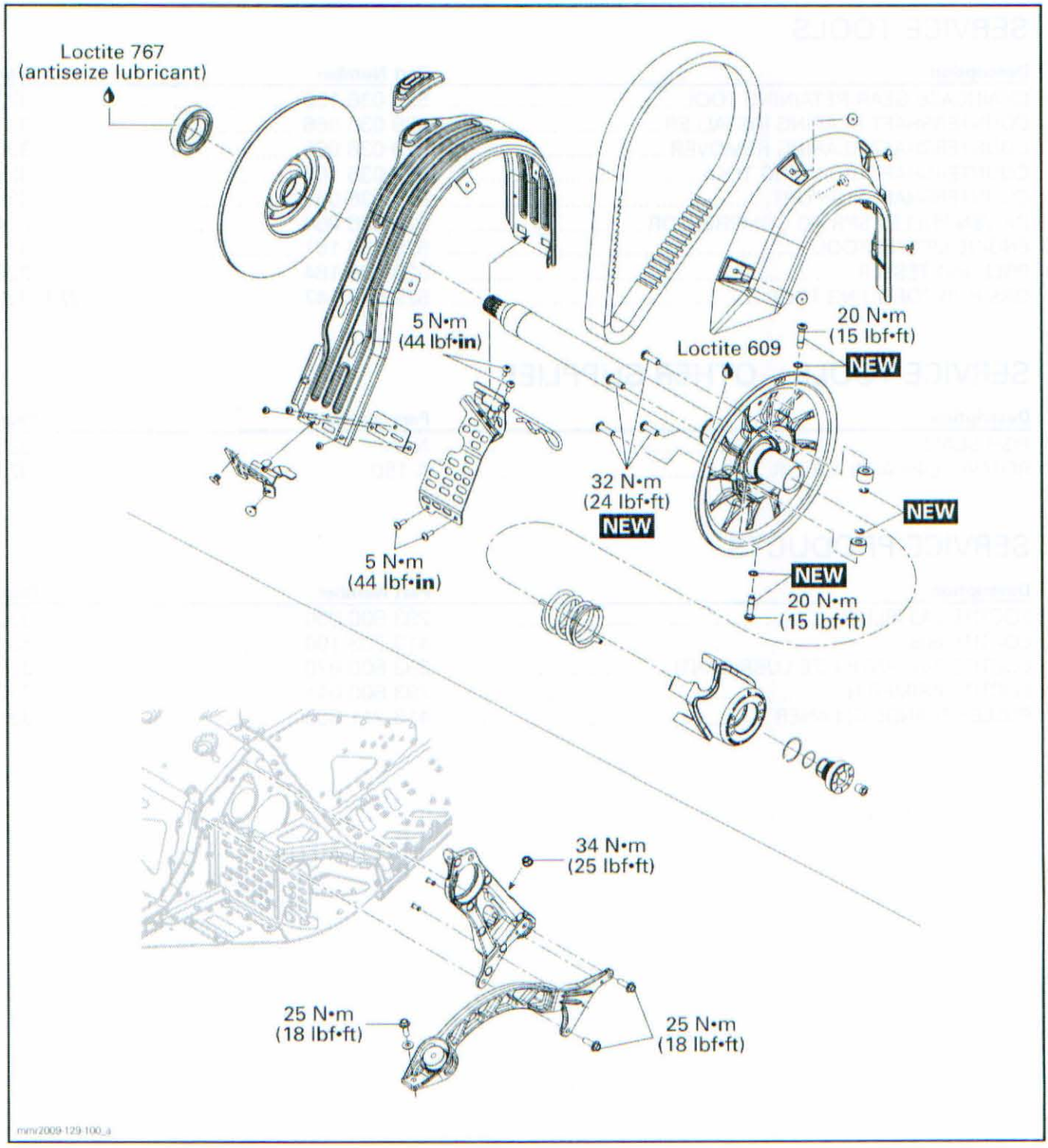

www.midwestmanuals.com

DRIVEN PULLEY (SCREW TYPE PULLEY ADJUSTER)

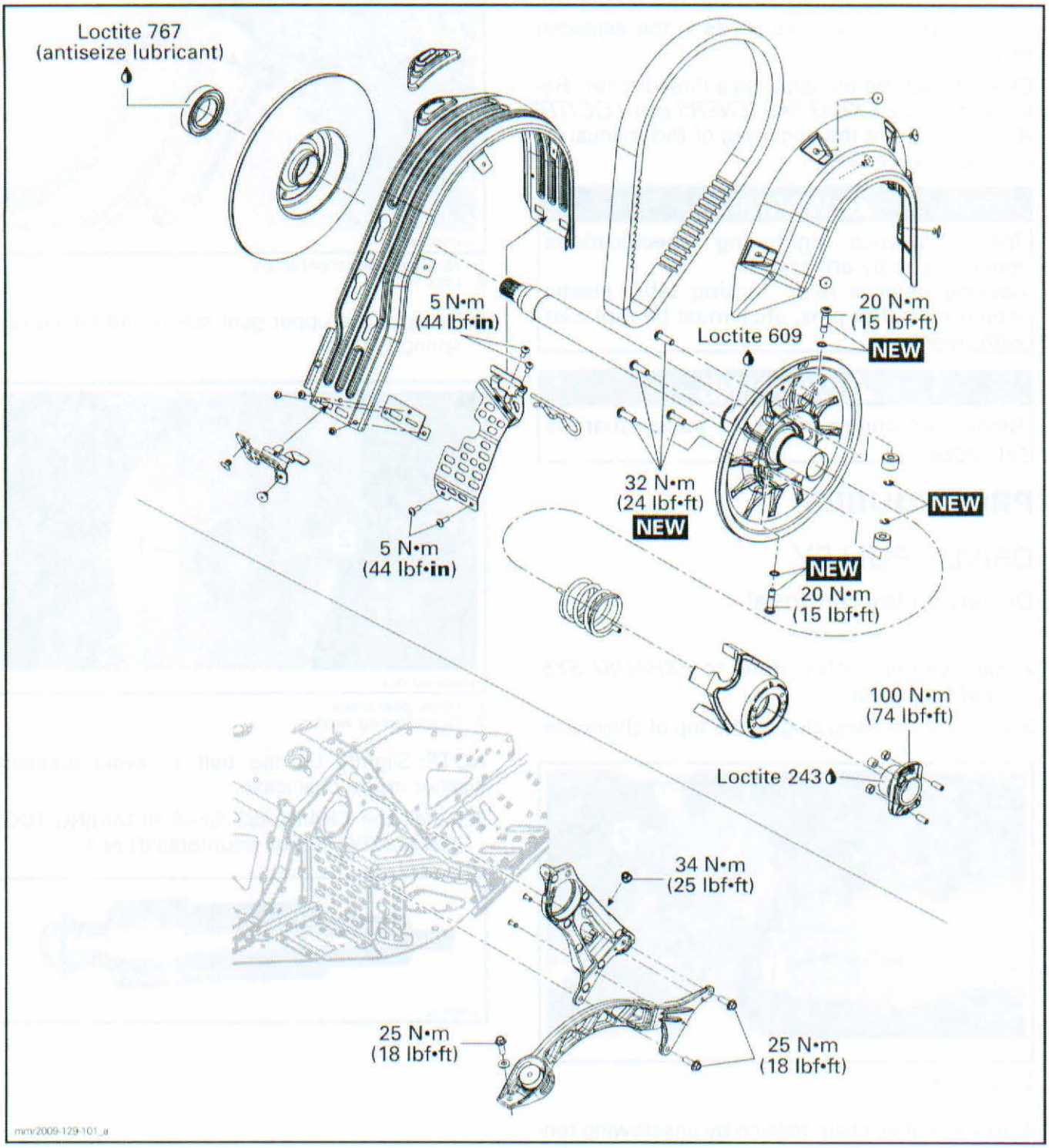

www.midwestmanuals.com

GENERAL

During assembly/installation, use the torque values and the service products as in the exploded views.

Clean threads before applying a threadlocker. Refer to *SELF-LOCKING FASTENERS* and *LOCTITE APPLICATION* at the beginning of this manual for complete procedure.

⚠ WARNING

Torque wrench tightening specifications must be strictly adhered to.
Locking devices (e.g.: locking tabs, elastic stop nuts, cotter pins, etc.) must be replaced with new ones.

⚠ WARNING

Never start engine when the pulley guard is removed.

PROCEDURES

DRIVEN PULLEY

Driven Pulley Removal

1. Open left side panel.
2. Remove the muffler. Refer to *EXHAUST SYSTEM* subsection.
3. Remove the filling plug on the top of chaincase.

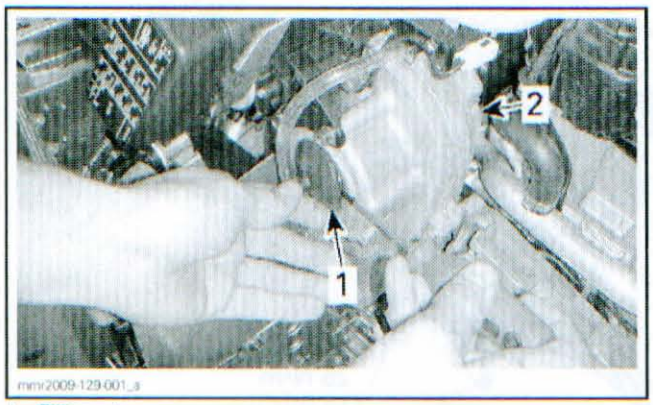

mmr2009-129-001_a

1. *Filling plug*
2. *Chaincase*

4. Release drive chain tension by unscrewing tensioner adjustment screw.

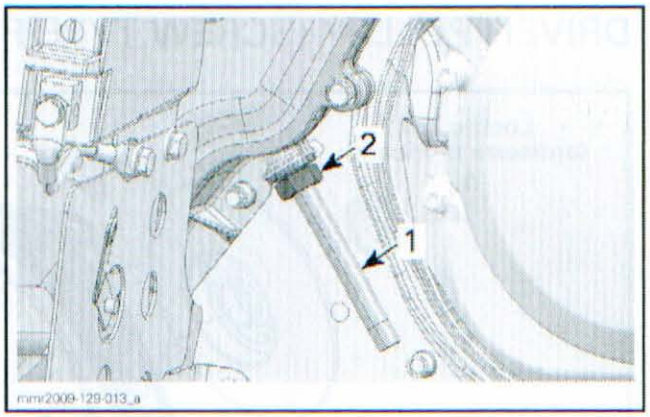

mmr2009-129-013_a

1. *Tensioner adjustment screw*
2. *Lock nut*

5. Remove the upper gear screw and the conical spring washer.

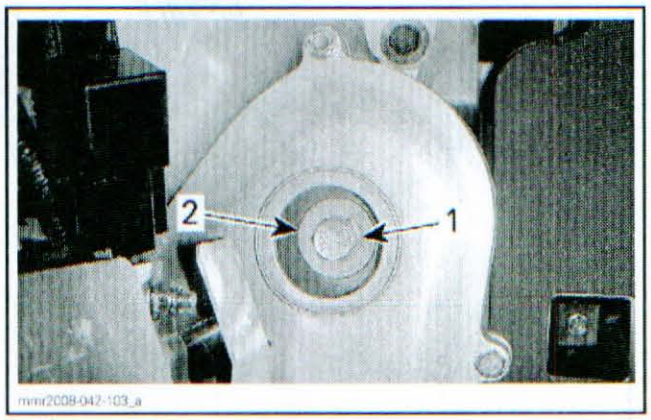

mmr2008-042-103_a

1. *Upper gear screw*
2. *Conical spring washer*

NOTE: Slightly tilt the bolt to avoid dropping washer inside chaincase.

6. Install the CHAINCASE GEAR RETAINING TOOL (P/N 529 036 152) on countershaft end.

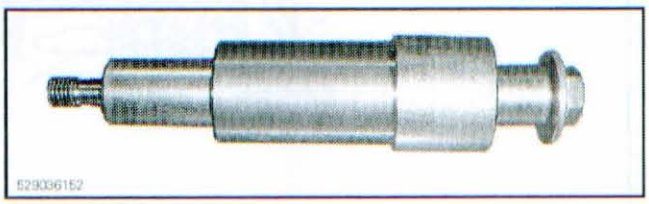

www.midwestmanuals.com

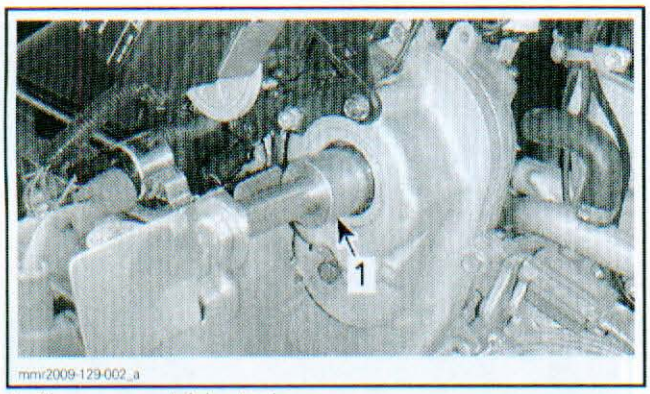

1. Upper gear retaining tool

7. Open right side panel.
8. Remove the drive belt. Refer to *DRIVE BELT* subsection.
9. Behind driven pulley, remove screw securing the countershaft bearing flange.

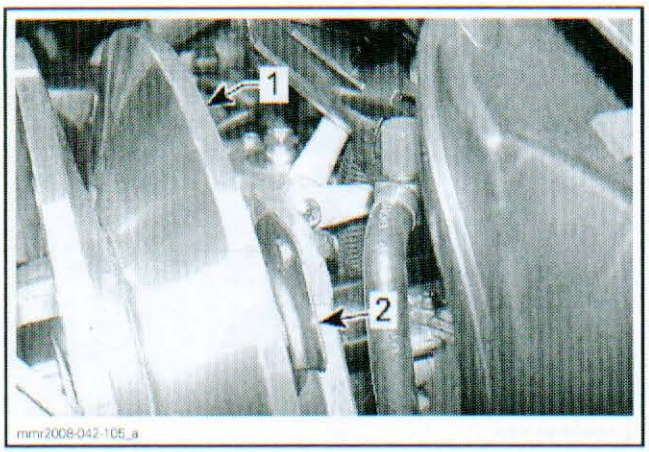

1. Driven pulley
2. Countershaft bearing flange

10. Pull the driven pulley to disengage countershaft and upper gear.

NOTE: If necessary, tap the upper gear retaining tool with a plastic hammer.

11. Unscrew countershaft from the upper gear retaining tool. Do not remove tool.

NOTE: While countershaft is removed from vehicle, the upper gear retaining tool keeps the drive chain and the upper gear in position inside chaincase.

Driven Pulley Disassembly

Cam and Spring

1. Unscrew and remove the following parts according to pulley adjuster type.

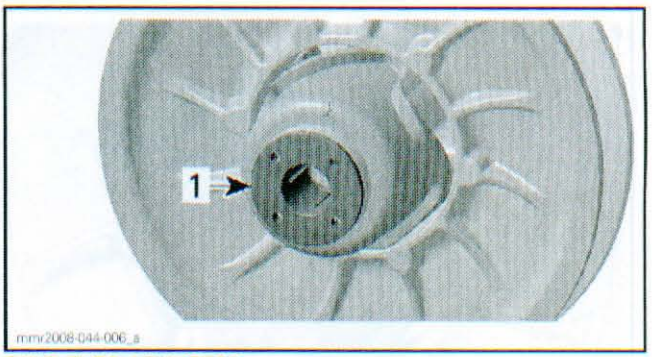

RING TYPE ADJUSTER
1. Adjusting ring

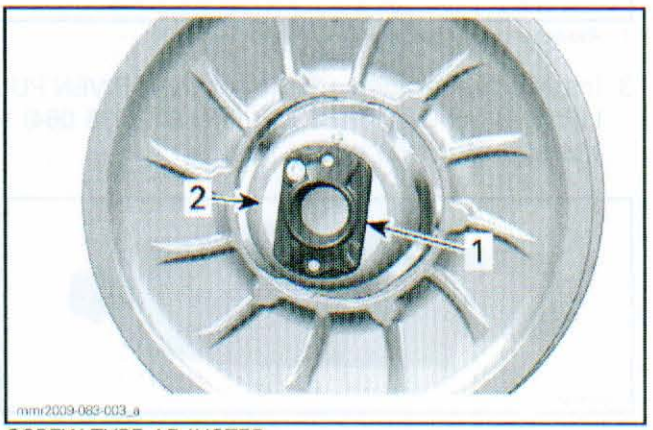

SCREW TYPE ADJUSTER
1. Adjuster hub
2. Washer

NOTE: To remove the screw type adjuster, use the QRS HUB TORQUING TOOL (P/N 529 036 147).

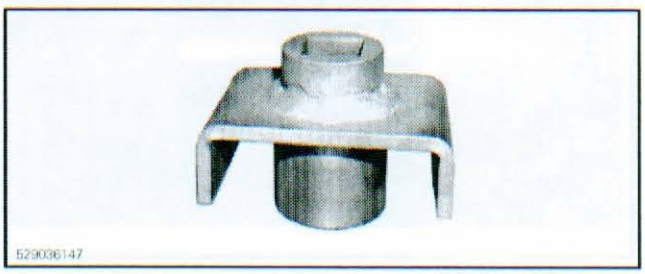

2. Remember spring position for reinstallation.

www.midwestmanuals.com

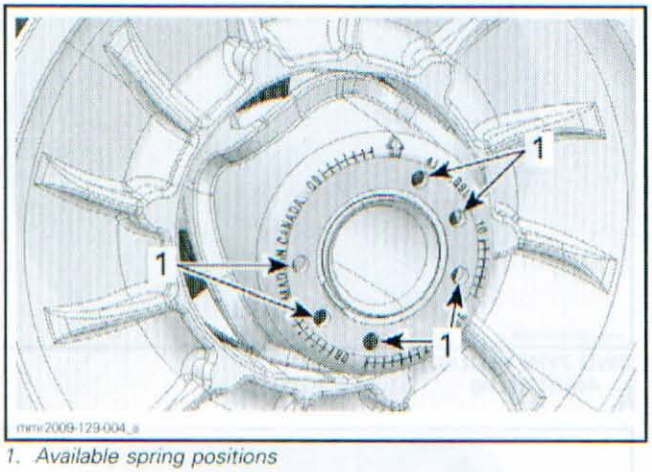

mmr2009-129-004_a

1. Available spring positions

3. Install the threaded adapter of the DRIVEN PULLEY SPRING COMPRESSOR (P/N 529 036 064) at the end of driven pulley.

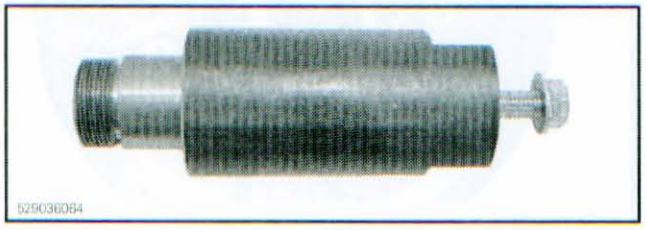
529036064

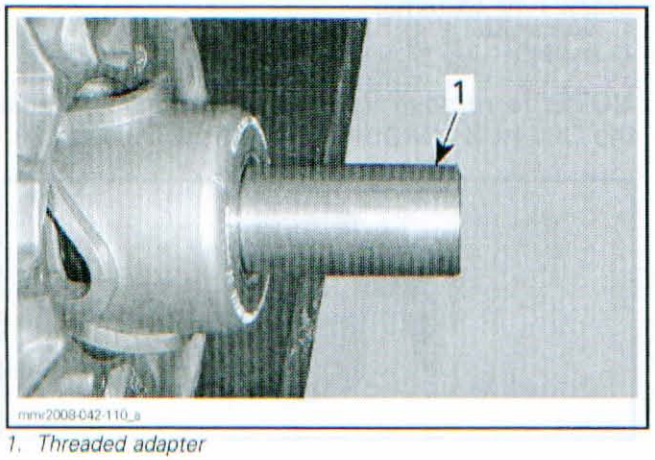

mmr2008-042-110_a

1. Threaded adapter

4. Install the external sleeve over the threaded adapter and secure sleeve with the driven spring compressor screw.

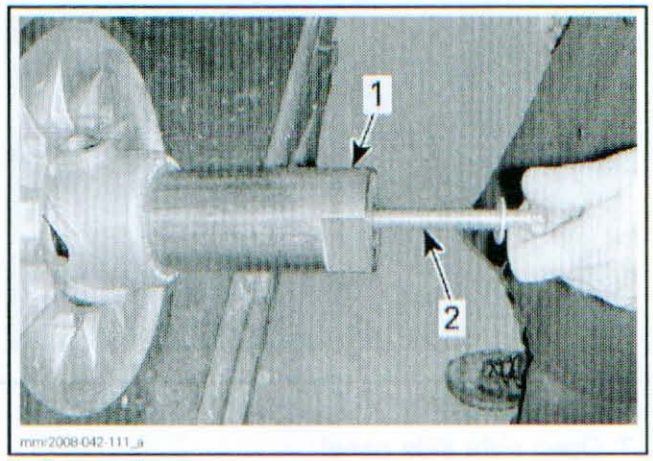

mmr2008-042-111_a

1. External sleeve
2. Driven spring compressor screw

5. Tighten the driven spring compressor screw to compress the cam.
6. Install the driven spring compressor in a vice.

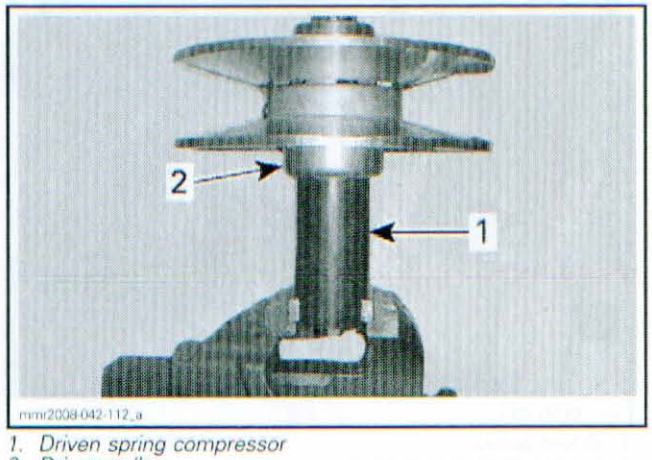

mmr2008-042-112_a

1. Driven spring compressor
2. Driven pulley

7. Using a heat gun, heat cam screws to break the thread locker.

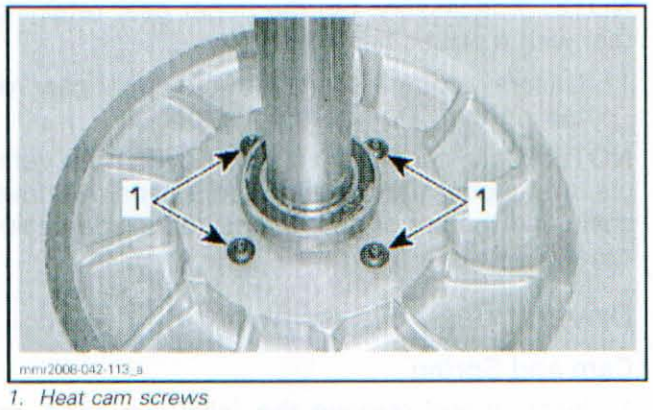

mmr2008-042-113_a

1. Heat cam screws

8. Remove and discard cam screws.
9. Unscrew the driven spring compressor screw completely.
10. Retain cam and spring in position.

www.midwestmanuals.com

11. Hold spring against the fixed sheave and remove cam.
12. Remember spring position before removing it from fixed sheave.

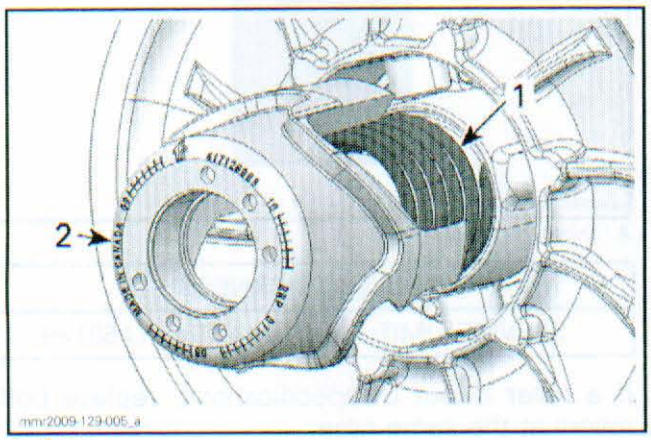

1. Spring
2. Cam

Sliding Sheave

1. Remove the cam and spring. See procedure in this subsection.
2. Remove the *COUNTERSHAFT BEARING*, see procedure in this subsection.
3. Remove sliding sheave.

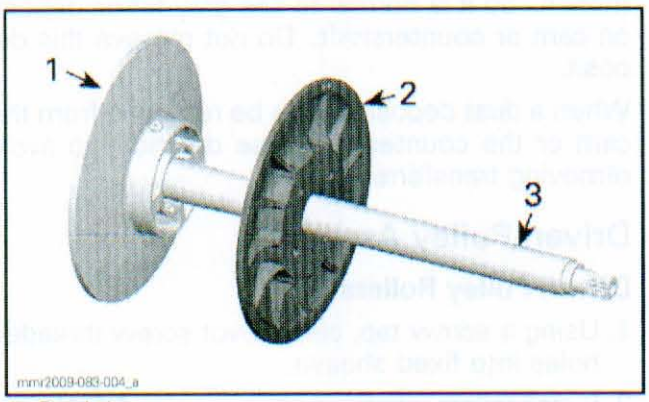

1. Fixed sheave
2. Sliding sheave
3. Countershaft

Fixed Sheave

The fixed sheave and countershaft are sold as an assembly. They are not available separately.

Driven Pulley Rollers

1. Move apart sliding and fixed sheaves.
2. Remove and **discard** pivot screws.

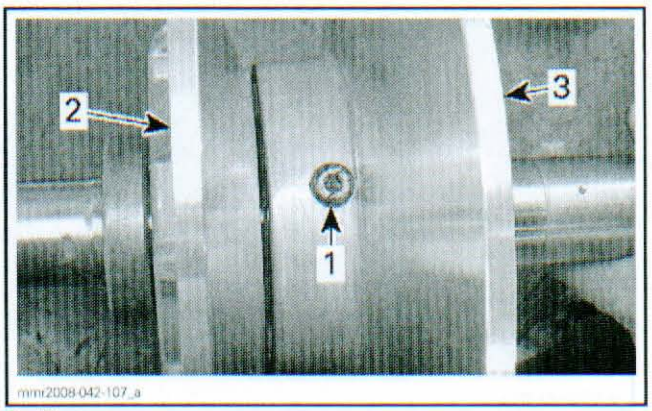

1. Pivot screw
2. Sliding sheave
3. Fixed sheave

3. Remove rollers.
4. Discard E-clips.

Driven Pulley Inspection

Cam and Spring

Verify contact surfaces of cam for visible damages. Replace cam if necessary.

Using a dial bore gauge, measure the inner diameter of cam bushing. Measuring point must be at least 5 mm (1/4 in) from bushing edge.

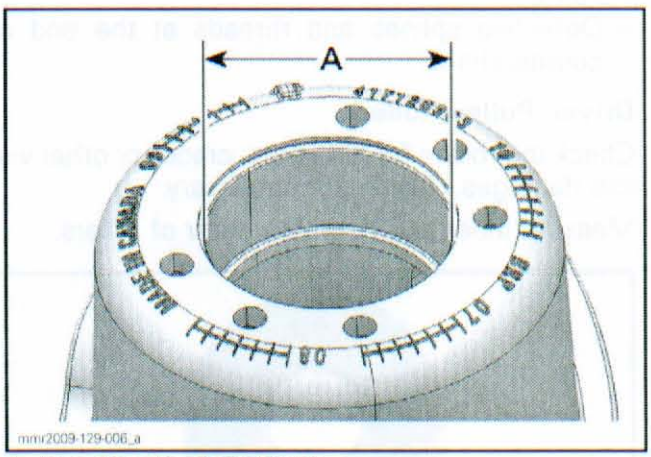

A. Inner diameter of cam bushing

BUSHING	SERVICE LIMIT
Cam bushing	41.5 mm (1.634 in)

Replace the cam if the inner diameter of bushing is out of specification.

Sliding Sheave

Inspect pulley sheave for marks or scratches.

Using a dial bore gauge, measure the inner diameter of sliding sheave bushing. Measuring point must be at least 5 mm (1/4 in) from bushing edge.

www.midwestmanuals.com

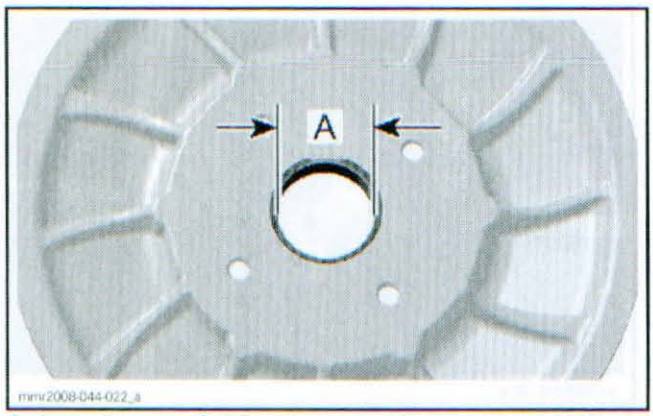

A. Inner diameter of sliding sheave bushing

BUSHING	SERVICE LIMIT
Sliding sheave bushing	41.5 mm (1.634 in)

Replace the sliding sheave if the inner diameter of bushing is out of specification.

Fixed Sheave

Replace fixed sheave and countershaft if one of the following problem is detected:

- Marks or scratches on pulley sheave
- Bent, twisted or otherwise damaged countershaft
- Defective splines and threads at the end of countershaft.

Driven Pulley Rollers

Check the rollers for flat spots, cracks or other visible damages. Replace if necessary.

Measure inner and outer diameter of rollers.

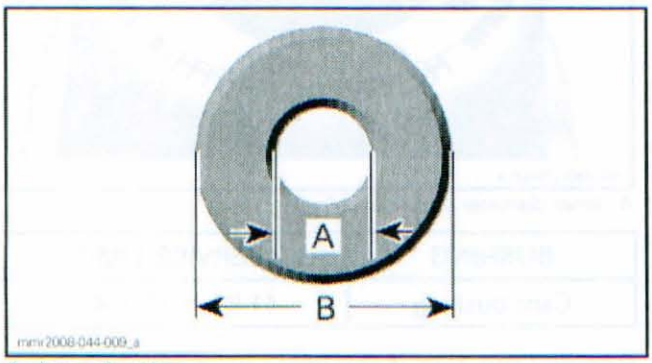

A. Inner diameter
B. Outer diameter

ROLLER DIAMETER	SERVICE LIMIT
Inner diameter	8.5 mm (.335 in)
Outer diameter	21.5 mm (.846 in)

Measure the roller thickness.

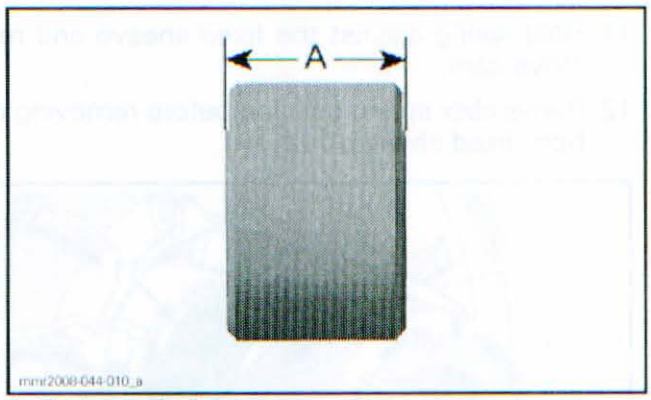

A. Thickness of roller

ROLLER THICKNESS	
SERVICE LIMIT	14.75 mm (.581 in)

If a roller is out of specifications, replace both rollers at the same time.

Driven Pulley Cleaning

Use the PULLEY FLANGE CLEANER (P/N 413 711 809) and a clean rag to clean pulley sheaves.

Cam and Spring

During break-in period, teflon from bushing moves to cam or countershaft surface. A teflon over teflon running condition occurs, leading to low friction. So it is normal to see gray teflon deposit on cam or countershaft. Do not remove this deposit.

When a dust deposit has to be removed from the cam or the countershaft, use dry cloth to avoid removing transferred teflon.

Driven Pulley Assembly

Driven Pulley Rollers

1. Using a screw tap, clean pivot screw threaded holes into fixed sheave.
2. Install rollers into fixed sheave using **NEW** pivot screws with ribbed lock washers.

NOTICE **Always use new pivot screws with pre-applied threadlocker.**

3. Torque pivot screws to 20 N•m (15 lbf•ft).

www.midwestmanuals.com

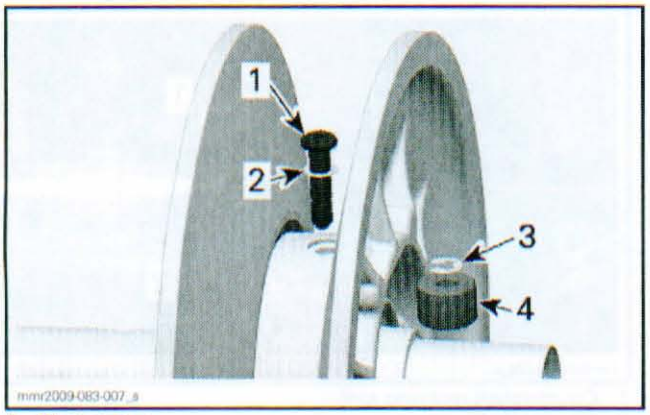

1. *Pivot screw*
2. *Ribbed lock washer*
3. *E-clip*
4. *Roller*

4. Using a ROTOR CLIP® APPLICATOR (P/N A-150), install **NEW** E-clips to lock pivot screws.

NOTE: To purchase an applicator, contact Rotor Clip Company at **www.rotorclip.com**.

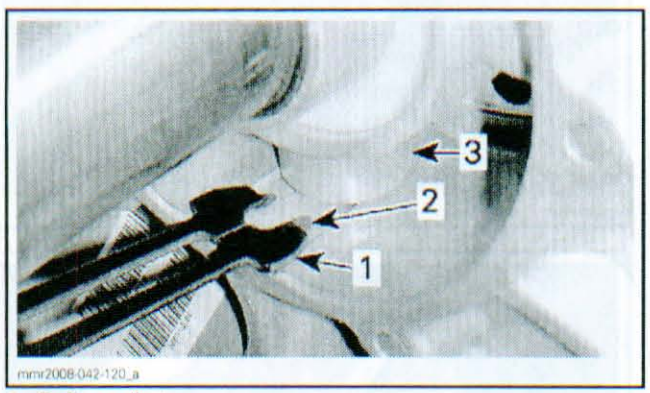

1. *E-clip applicator*
2. *E-clip*
3. *Roller*

Cam and Spring

1. Insert one end of the spring into the appropriate cam locating hole (previously noted during removal).
2. Install cam and spring. Enter the other end of the spring in its fixed sheave locating hole previously noted during removal.

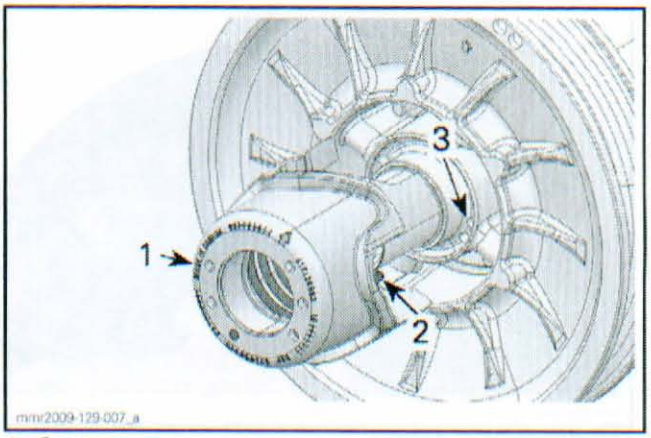

1. *Cam*
2. *End of spring*
3. *Fixed sheave locating holes*

3. Push and turn the cam to align its arrow with the arrow on fixed sheave.

At the end of cam installation, the arrow on the cam should be move clockwise (± 30°).

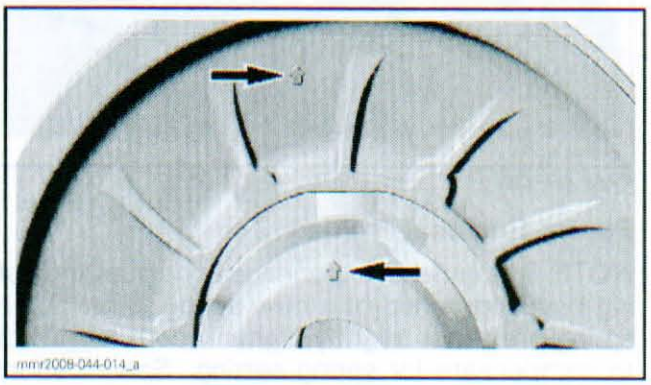

4. Install the driven spring compressor sleeve and tighten the driven spring compressor screw until cam is completely pressed against sliding sheave.
5. Check the *SPRING TORSIONAL PRELOAD*.
6. When preload is within specification, install 4 **NEW** cam screws.
7. Torque cam screws to 32 N•m (24 lbf•ft).
8. Remove the driven spring compressor.

Sliding Sheave

The assembly of sliding sheave is the reverse of the disassembly. However, pay attention to the following.

When installing sliding sheave, make sure to align its arrow with the arrow on cam.

Rotor Clip® is a trademark of Rotor Clip Company, Inc.

www.midwestmanuals.com

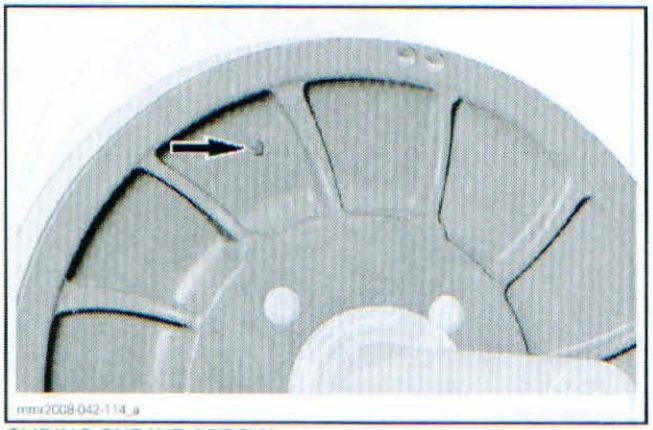

SLIDING SHEAVE ARROW

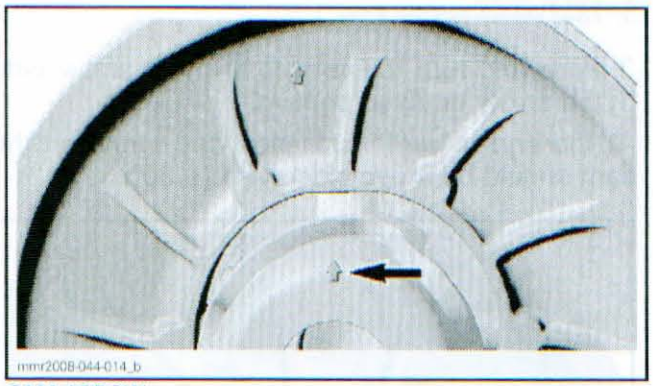

CAM ARROW

Spring Torsional Preload

NOTE: It is usual to experience spring setting during breaking period of a new spring. The factory spring preload is slightly higher (about 1 kg (2 lb)) to compensate for spring setting. Specifications in *TECHNICAL SPECIFICATIONS* are applicable after break-in period (about 10 hours of use).

1. Secure the countershaft in a vise using the COUNTERSHAFT RETAINING TOOL (P/N 529 036 165).

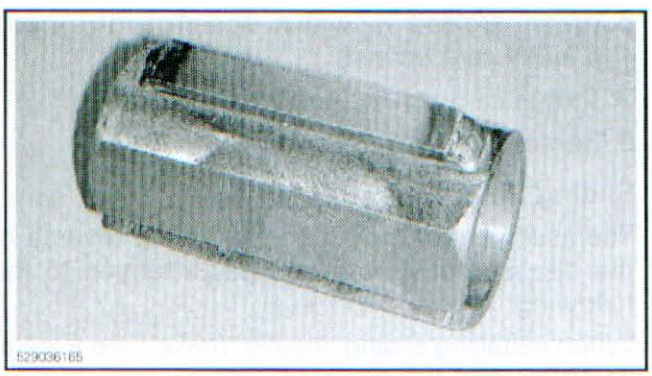

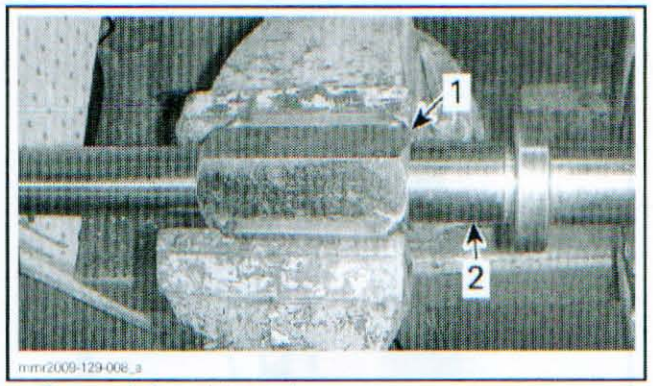

1. *Countershaft retaining tool*
2. *Countershaft*

2. Install the PRELOAD TESTER (P/N 529 036 164) using old cam screws.

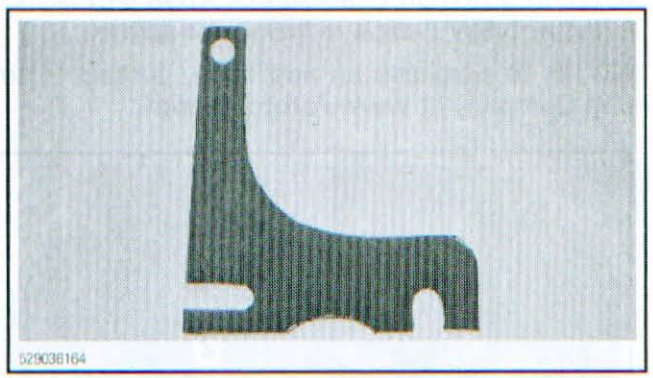

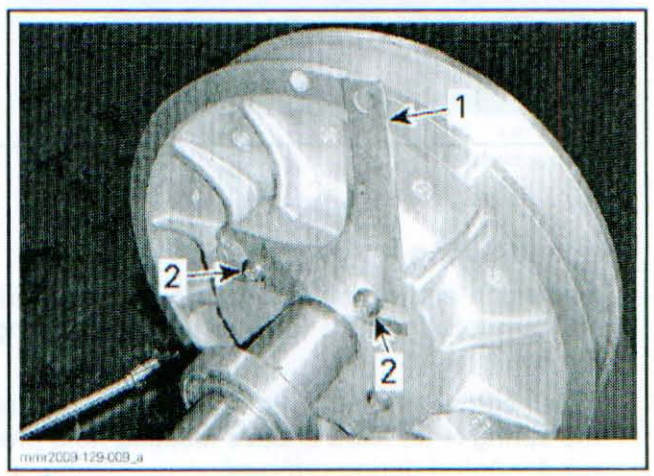

1. *Preload tester*
2. *Cam screws*

3. Pull sliding sheave with a FISH SCALE (P/N N. A.) perpendicularly with pulley axle.

   NOTE: The fish scale can be purchased locally.

   3.1 Take 1st measurement when sliding sheave begins to turn.

   3.2 Hold fish scale at this position.

   3.3 Slowly release tension from fish scale and take the 2nd measurement when sliding sheave begins to return.

www.midwestmanuals.com

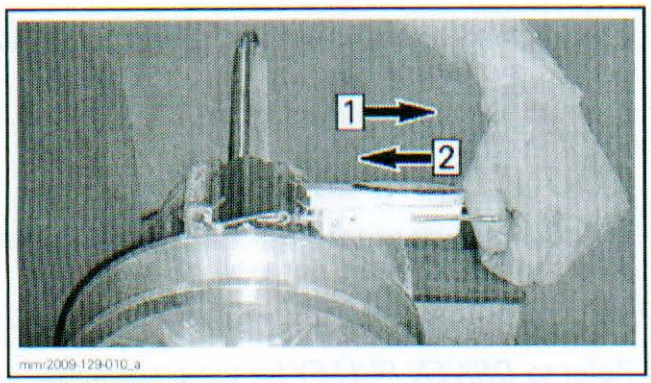

Step 1: 1st measurement
Step 2: 2nd measurement

Spring preload is the average measurement between these 2.

$$\frac{\text{1ST MEASUREMENT (WHEN OPENING)} + \text{2ND MEASUREMENT (WHEN CLOSING)}}{2} = \text{SPRING PRELOAD}$$

Example:

$$\frac{\text{8.2 KG (18 LB) (WHEN OPENING)} + \text{6.5 KG (14 LB) (WHEN CLOSING)}}{2} = \text{7.3 KG (16 LB) ACTUAL SPRING PRELOAD}$$

To adjust spring preload, relocate spring end in cam, moving it clockwise to increase the preload and counterclockwise to decrease it. Always recheck torsional preload after adjusting.

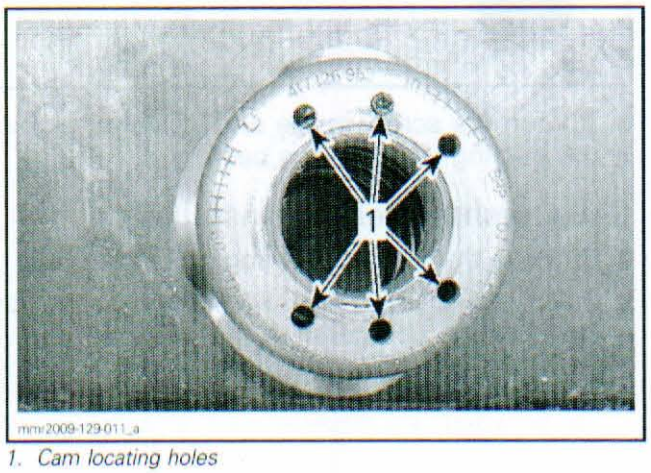

1. Cam locating holes

If spring preload can not be adjusted, try to relocate the other end of spring in fixed sheave.

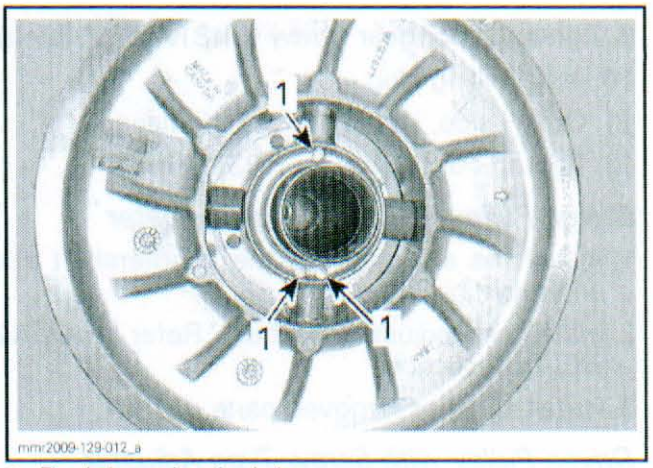

1. Fixed sheave locating holes

4. Finalize driven pulley assembly.

Driven Pulley Installation

1. Using sand paper (600-grit or 1000-grit) or steel wool, remove any rust on bearing shoulder of countershaft bearing support.

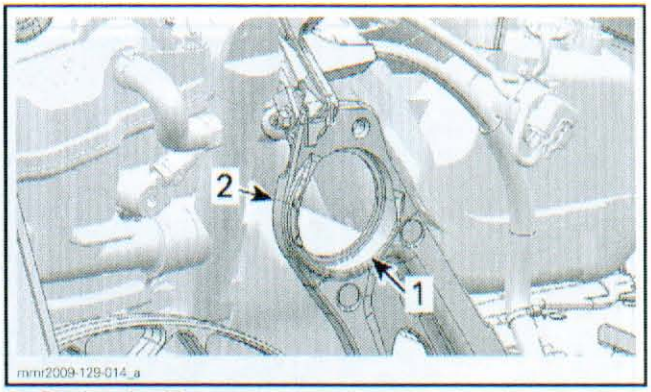

1. Bearing shoulder
2. Countershaft bearing support

2. Apply a thin layer of LOCTITE 767 (ANTISEIZE LUBRICANT) (P/N 293 800 070) on bearing shoulder.
3. Insert countershaft through countershaft bearing support.
4. Fasten the end of countershaft to upper gear retaining tool.
5. Align countershaft splines with upper gear splines.
6. Using the upper gear retaining tool as a puller, install countershaft into upper gear. Ensure countershaft bearing is installed properly into countershaft bearing support.
7. Remove the upper gear retaining tool.
8. Install the upper gear screw and the conical spring washer.

NOTE: The conical spring washer must be installed with its concave side towards upper gear.

www.midwestmanuals.com

9. Tighten upper gear screw to 48 N•m (35 lbf•ft).
10. Install filling plug.
11. On LH side, install the bearing flange.
12. Tighten nut to 15 N•m (133 lbf•**in**).

Driven Pulley with Ring Type Adjuster

1. Install the adjuster into the countershaft end and fully tight it.
2. Install and adjust drive belt. Refer to *DRIVE BELT* subsection.
3. Install all other removed parts.

Driven Pulley with Screw Type Adjuster

1. First, apply LOCTITE PRIMER N (P/N 293 800 041) then LOCTITE 243 (BLUE) (P/N 293 800 060) on threads of adjuster hub.
2. Install the adjuster hub with its washer into the countershaft end and fully tight it.

NOTE: Ensure to position the washer against the adjuster nuts. Washer must turns freely.

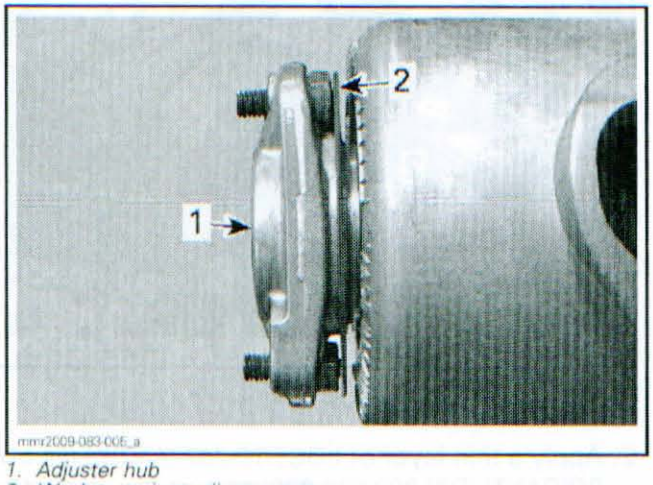

1. Adjuster hub
2. Washer against adjuster nuts

3. Using the QRS HUB TORQUING TOOL (P/N 529 036 147), torque adjuster hub to 100 N•m (74 lbf•ft).

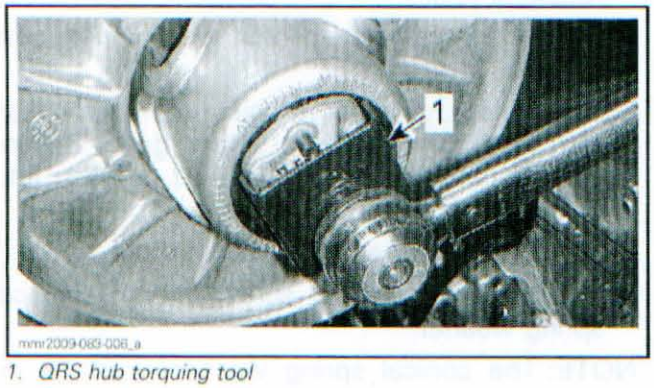

1. QRS hub torquing tool

4. Install and adjust drive belt. Refer to *DRIVE BELT* subsection.
5. Install all other removed parts.

COUNTERSHAFT

The countershaft and the fixed sheave are sold as an assembly. They are not available separately.

Countershaft Removal and Installation

Refer to *DRIVEN PULLEY* for the procedures.

COUNTERSHAFT BEARING

Countershaft Bearing Removal

1. Remove *DRIVEN PULLEY*, see procedure in this subsection.
2. Install the COUNTERSHAFT BEARING REMOVER (P/N 529 036 065) on countershaft.

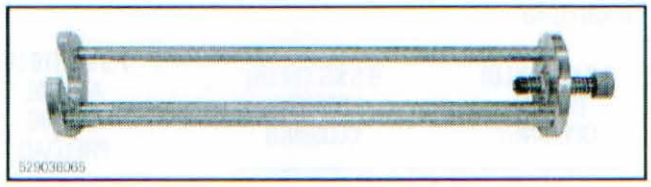

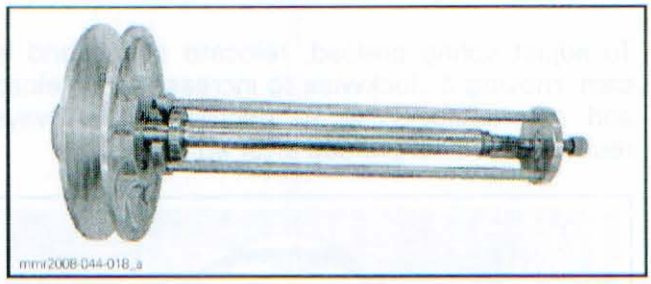

3. Tighten the screw at the end of tool to extract the bearing. Discard the bearing.

Countershaft Bearing Installation

1. Remove the adjustment ring on cam.
2. Insert the COUNTERSHAFT SUPPORT (P/N 529 036 067) into countershaft.

www.midwestmanuals.com

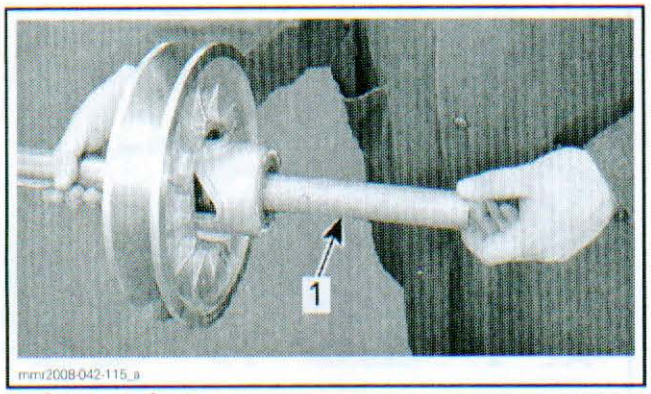

1. Countershaft support

NOTICE **The countershaft support is mandatory to avoid damaging the countershaft threaded end and the cam during bearing installation.**

3. Using PULLEY FLANGE CLEANER (P/N 413 711 809), clean residues on countershaft bearing surface.
4. Check countershaft bearing surface for wear.
5. Apply LOCTITE 609 (P/N 413 703 100) on countershaft bearing surface.

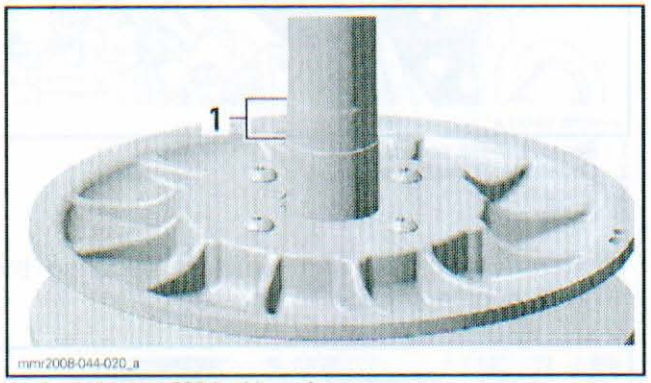

1. Apply Loctite 609 in this region

6. Using a press and the COUNTERSHAFT BEARING INSTALLER (P/N 529 036 066), install the **NEW** bearing on countershaft.

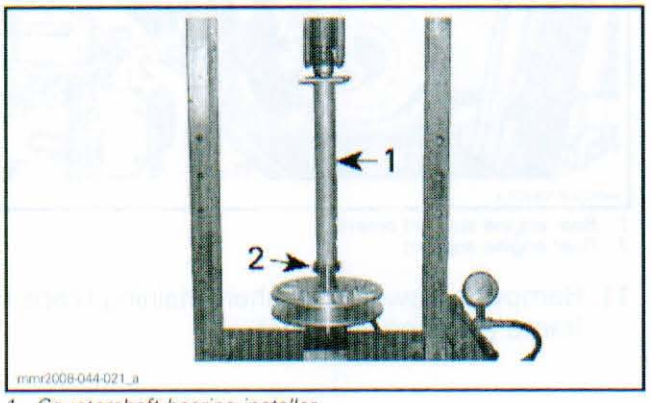

1. Countershaft bearing installer
2. NEW bearing

NOTICE **Use a press only, never tap on countershaft bearing installer with an hammer to avoid damaging bearing and countershaft.**

7. Clean the surplus of Loctite with a rag to avoid having Loctite on sliding sheave bushing.

COUNTERSHAFT BEARING SUPPORT

Countershaft Bearing Support Removal

1. Remove the exhaust manifold. Refer to *EXHAUST SYSTEM* subsection.
2. Remove the drive pulley. Refer to *DRIVE PULLEY* subsection.
3. Remove the driven pulley, see procedure in this subsection.
4. Install the ENGINE LIFTING TOOL (P/N 529 036 151).
   4.1 Install the tool instead of exhaust manifold.

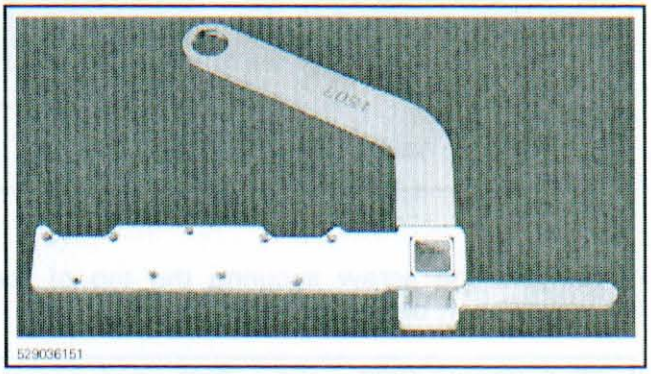

   4.2 Using exhaust manifold nuts, secure the tool.

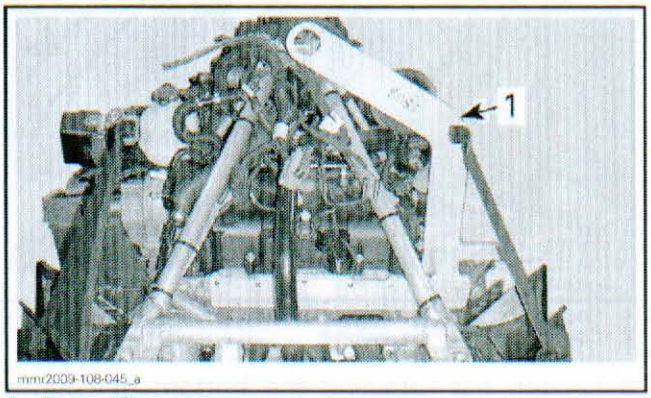

1. Engine lifting tool

   4.3 Install a hoist.
5. Remove the caliper protector.

www.midwestmanuals.com

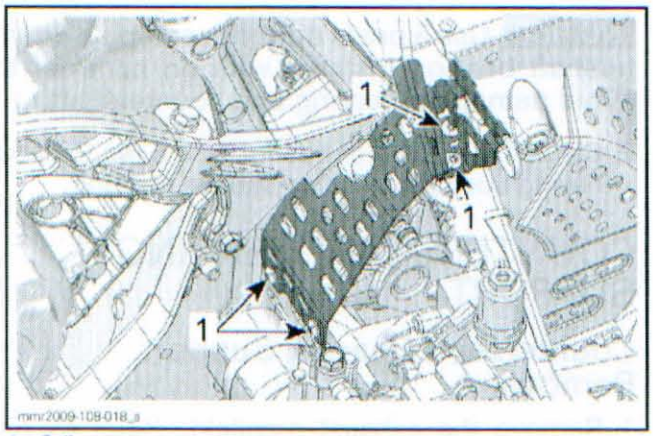

1. Caliper protector screws

6. Remove the Banjo fitting then move the brake hose aside. Discard sealing washers.

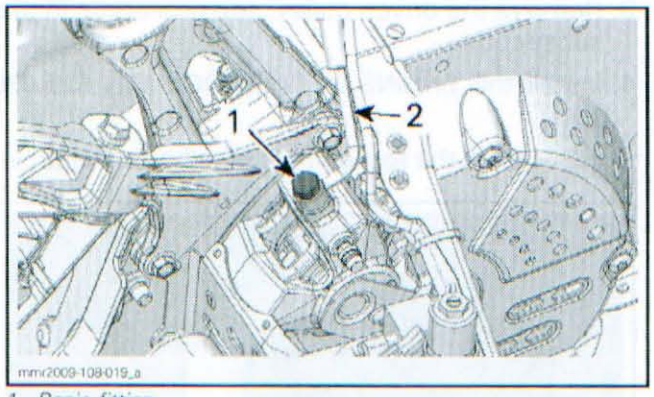

1. Banjo fitting
2. Brake hose

7. Remove the screw securing the top of the countershaft bearing support.

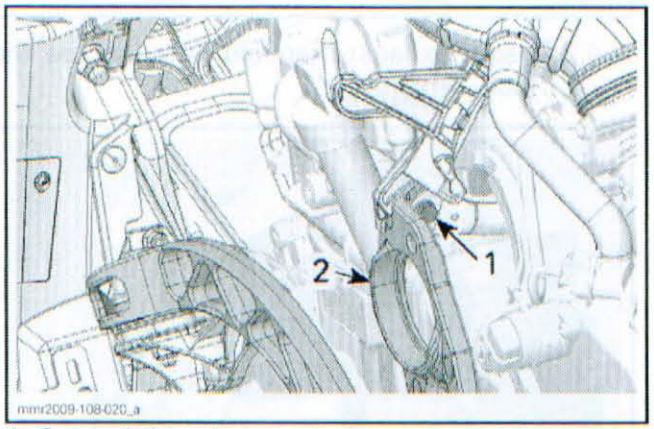

1. Countershaft bearing support upper screw
2. Countershaft bearing support

8. Loosen nut retaining the bottom of countershaft bearing support to frame.

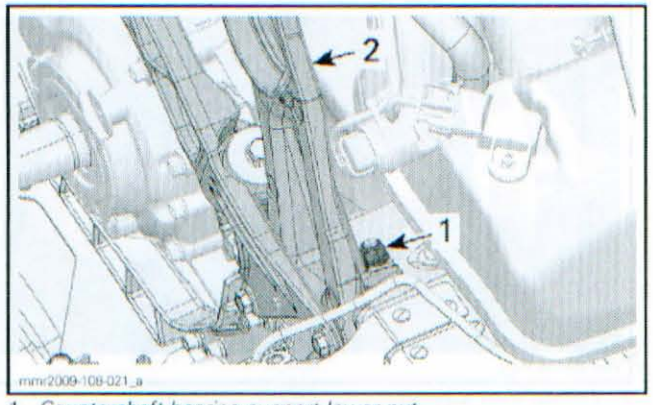

1. Countershaft bearing support lower nut
2. Countershaft bearing support

9. Remove both screws retaining the brace and the countershaft bearing support to frame.

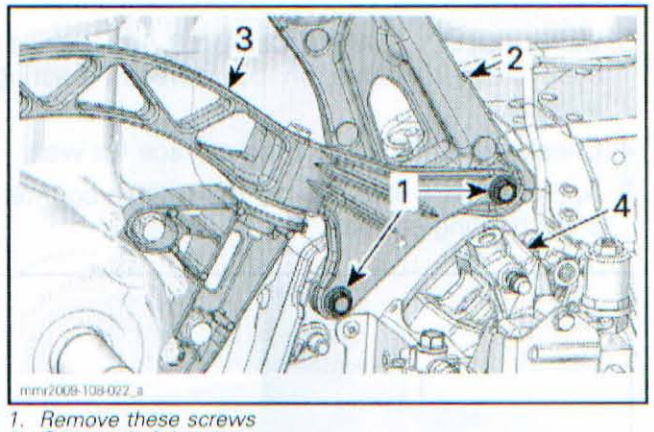

1. Remove these screws
2. Countershaft bearing support
3. Brace
4. Caliper

10. Remove screws and washers securing the rear engine support to engine.

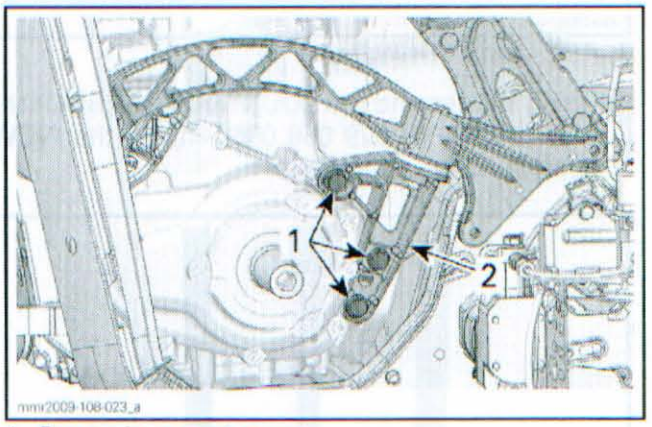

1. Rear engine support screws
2. Rear engine support

11. Remove screw and washer retaining brace to frame (front engine side).

www.midwestmanuals.com

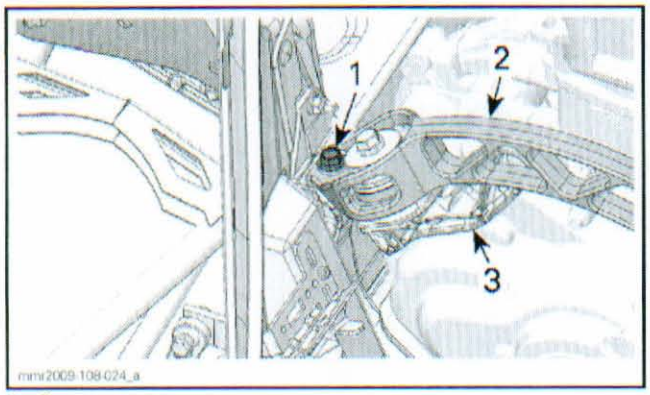

1. *Brace screw*
2. *Brace*
3. *Front engine support*

12. Unscrew the engine front rubber mount.

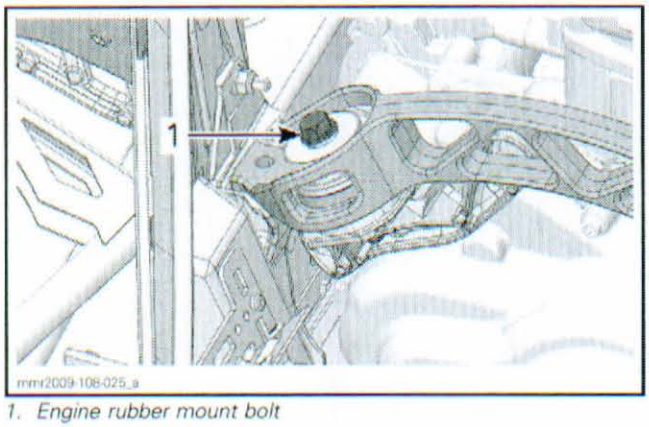

1. *Engine rubber mount bolt*

13. Remove the brace with countershaft bearing support and rear engine support.
14. Drill rivets securing countershaft bearing support to brace.

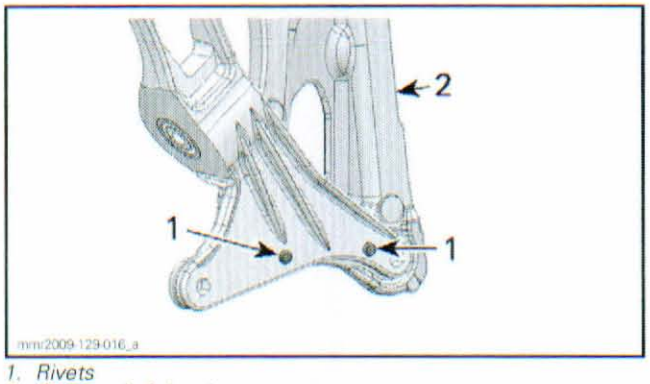

1. *Rivets*
2. *Countershaft bearing support*

15. Remove the support.

Countershaft Bearing Support Installation

1. Install countershaft bearing support to brace with two rivets.
2. Install brace on vehicle using procedure describes in *ENGINE REMOVAL AND INSTALLATION* subsection.
3. Install all other removed parts.

www.midwestmanuals.com

www.midwestmanuals.com

BRAKE

SERVICE TOOLS

Description	Part Number	Page
CALIPER PULLER	529 036 145	341
FLUKE 115 DIGITAL MULTIMETER	529 035 868	345
PROTECTIVE CAP	529 036 150	341

SERVICE PRODUCTS

Description	Part Number	Page
BRAKE FLUID GTLMA (DOT 4)	293 600 062	337
LOCTITE 767 (ANTISEIZE LUBRICANT)	293 800 070	342
XP-S SYNTHETIC GREASE	293 550 010	344

www.midwestmanuals.com

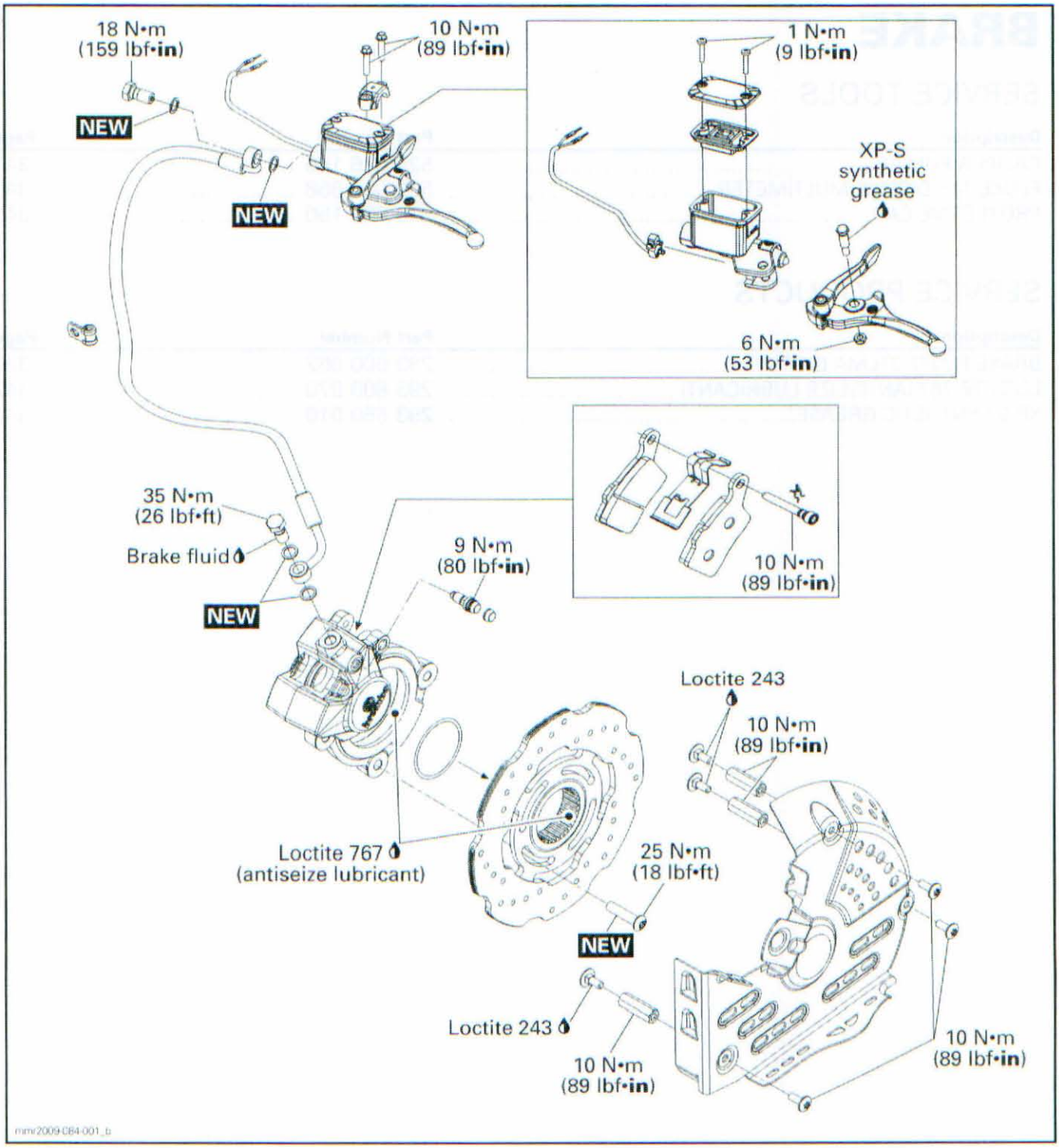

www.midwestmanuals.com

GENERAL

During assembly/installation, use torque values and service products as in the exploded view.

Clean threads before applying a threadlocker. Refer to *SELF-LOCKING FASTENERS* and *LOCTITE APPLICATION* at the beginning of this manual for complete procedure.

⚠ WARNING

Torque wrench tightening specifications must be strictly adhered to.
Locking devices (e.g.: locking tabs, elastic stop nuts, cotter pins, etc.) must be replaced with new ones.

Hoses or cables removed or disconnected must be installed and routed at the same place.

NOTICE Locking ties removed during a procedure must be replaced and installed at the same location.

⚠ WARNING

Never apply anything to brake fittings, The use of threads sealant or Teflon tape could cause brake system failure. Severe injury or death can occur.

⚠ WARNING

A contaminated brake disc or pad reduces stopping power. Discard contaminated pads and clean contaminated disc with a high quality brake degreasing agent.

NOTICE Avoid spilling brake fluid on plastic, rubber or painted parts. Protect these parts with a rag when servicing brake system.

NOTICE Wipe up any brake fluid spillage.

NOTICE To avoid serious damage to the brake system, use only DOT 4 brake fluid from a sealed container. Do not use brake fluid taken from old or already opened containers, nor mix different fluids for topping off.

NOTICE Sealing washers must be discarded and replaced with NEW ones every time a Banjo fitting is unscrewed.

Dispose brake fluid as per your local environmental regulation.

MAINTENANCE

BRAKE FLUID

The brake fluid must be changed in accordance with the maintenance chart.

Recommended Brake Fluid

Always use brake fluid meeting the specification DOT 4 such as BRAKE FLUID GTLMA (DOT 4) (P/N 293 600 062).

Brake Fluid Level Verification

With the vehicle on a level surface, position steering in straight-ahead position to ensure reservoir is level.

Brake fluid must always be above the MIN. line when brake lever is squeezed.

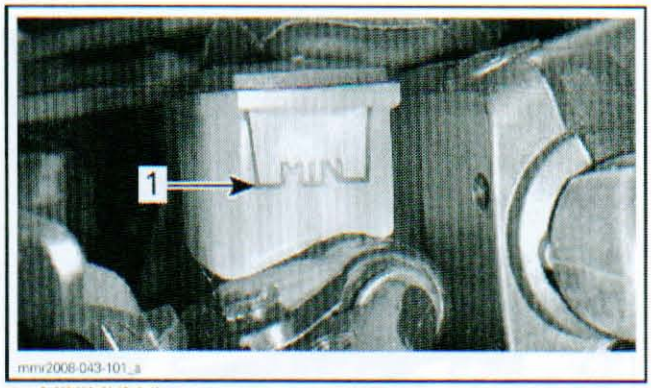

1. MINIMUM line

Add fluid as required. Do not overfill.

NOTE: A low level may indicate leaks or worn brake pads.

Brake Fluid Replacement

NOTE: Make sure not to contaminate brake lever with brake fluid. The brake lever pivot must always be properly lubricated. Refer to *BRAKE LEVER REPLACEMENT* in this subsection.

Draining

1. Place vehicle on a level surface.
2. Remove reservoir cover with its diaphragm.

www.midwestmanuals.com

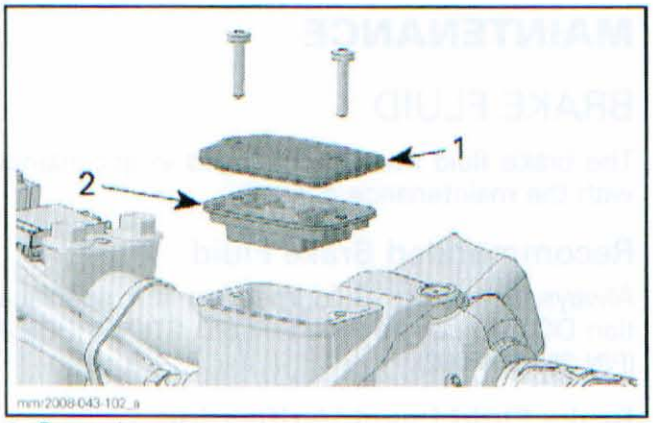

1. Reservoir cover
2. Diaphragm

3. Connect a clear hose to caliper bleeder.
4. Place the other end of hose in a container.
5. Loosen bleeder and pump brake lever until no more fluid flows out of bleeder.

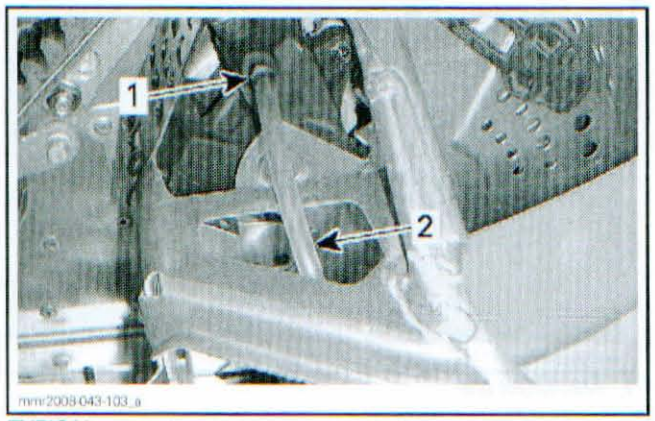

TYPICAL
1. Bleeder
2. Clear hose to catch used brake fluid

Filling

To fill brake circuit when it is empty do the following:

1. Ensure reservoir cover is removed.
2. Using a big syringe, push brake fluid slowly into the caliper.

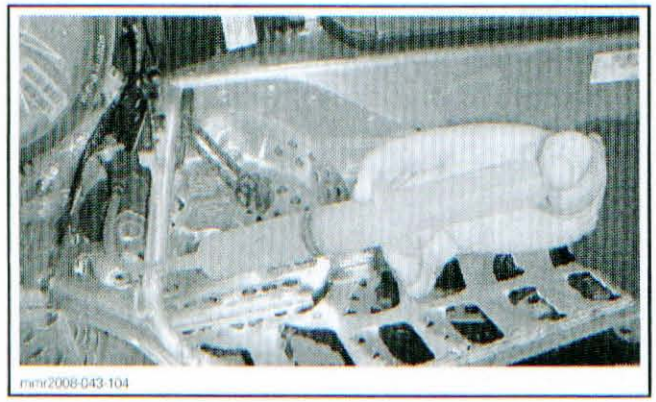

3. Continue to push brake fluid until reservoir is half full.
4. Close bleeder.
5. Add brake fluid into reservoir and install cover.
6. Squeeze brake lever.
   - 6.1 If brake lever is firm, it is not required to bleed brake system. Tighten bleeder to 9 N•m (80 lbf•**in**).
   - 6.2 If brake lever is spongy, bleed brake system as per following procedure.

Bleeding

1. Install a clear hose on bleeder.
2. Place the other end in a container partially filled with clean brake fluid.
3. Pump up circuit pressure with brake lever until lever resistance is felt.
4. Squeeze brake lever and open bleeder. When lever touches the handlebar, do not release lever and close bleeder.
5. Release brake lever slowly.
6. Repeat the procedure until no more air bubbles appear in hose.

NOTE: Check fluid level often to prevent air from being pumped into the circuit.

7. Install cover on reservoir.
8. Squeeze brake lever.
   - 8.1 If brake lever is firm, bleeding procedure is completed. Tighten bleeder to 9 N•m (80 lbf•**in**).
   - 8.2 If brake lever is still spongy, go to step 9.
9. Push back brake pads with caliper in place and squeeze brake lever.
10. Repeat step 2 to step 5.
11. Tighten bleeder to 9 N•m (80 lbf•**in**).
12. Install diaphragm and cover on reservoir.

PROCEDURES

BRAKE PADS

Brake Pads Inspection

1. Measure brake pad lining thickness.

SERVICE LIMIT	
Brake pad thickness	1 mm (1/32 in)

NOTICE Brake pads must always be replaced in pairs.

www.midwestmanuals.com

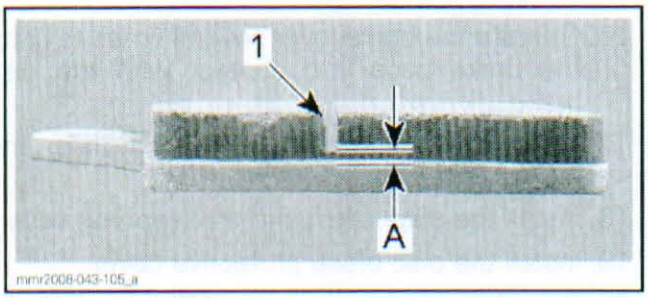

1. Groove on pad lining
A. Brake pad minimum thickness 1 mm (1/32 in)

2. Inspect brake disc at the same time.

Brake Pads Replacement

1. Place the vehicle on a level surface.
2. Cover the plastic parts under and near master cylinder in the event that brake fluid would be spilled.
3. Remove reservoir cover with its diaphragm.

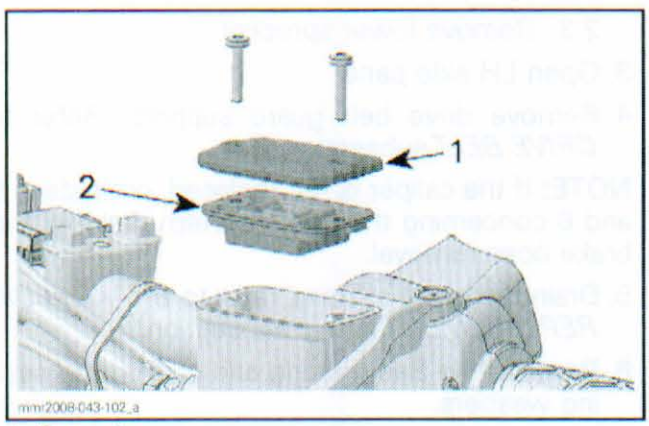

1. Reservoir cover
2. Diaphragm

4. Remove the disc brake protective cover.

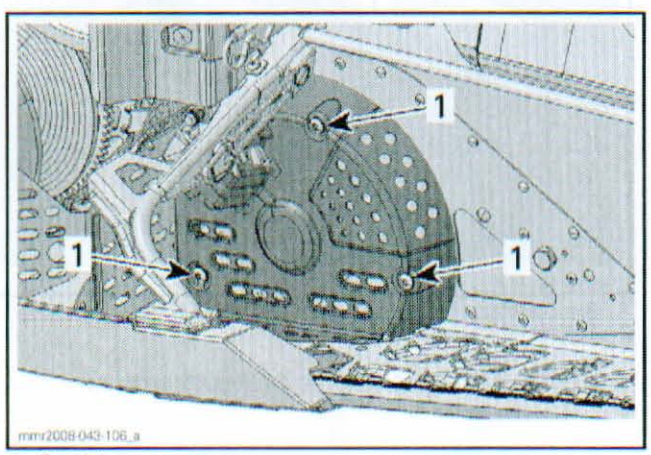

1. Retaining screws

5. Remove the clip securing pad pin.
6. Unscrew and remove the pad pin.

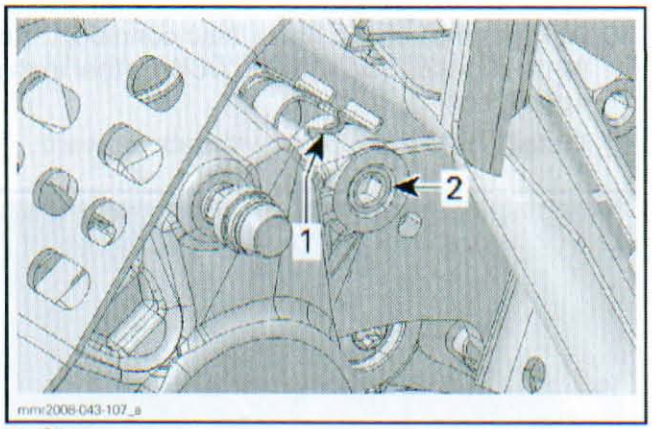

1. Clip
2. Brake pad pin

7. Using a flat screwdriver, retract pistons into their bores.

NOTICE Pay attention to avoid scratching brake disc.

8. Remove the circlip securing disc brake to drive shaft.

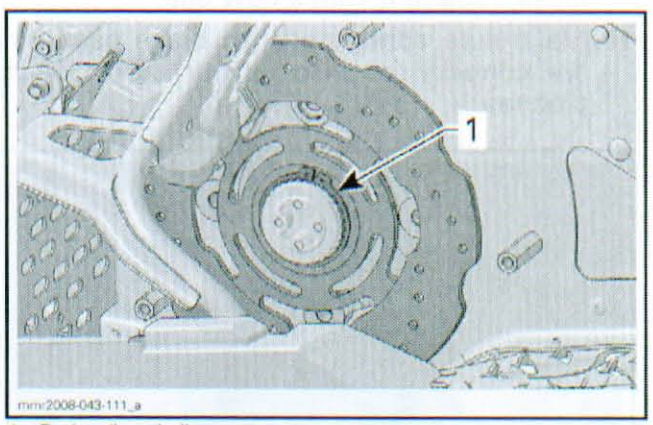

1. Brake disc circlip

9. Remove brake pads.
   - 9.1 Remove the external pad first.
   - 9.2 Pull the brake disc and remove the internal pad.

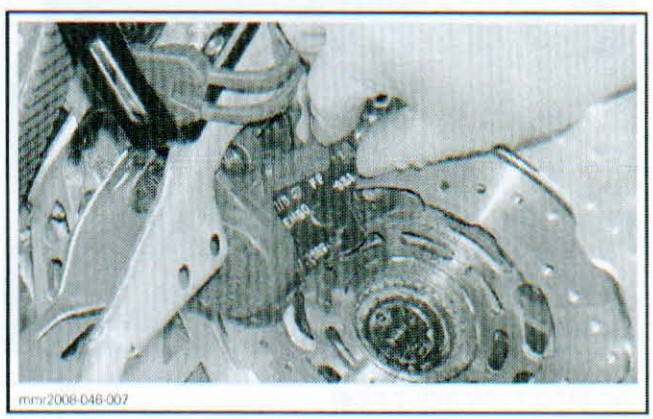

www.midwestmanuals.com

10. At this time, check brake disc condition. Refer to *BRAKE DISC INSPECTION* further in this subsection.
11. Install **NEW** brake pads with tabs upward.

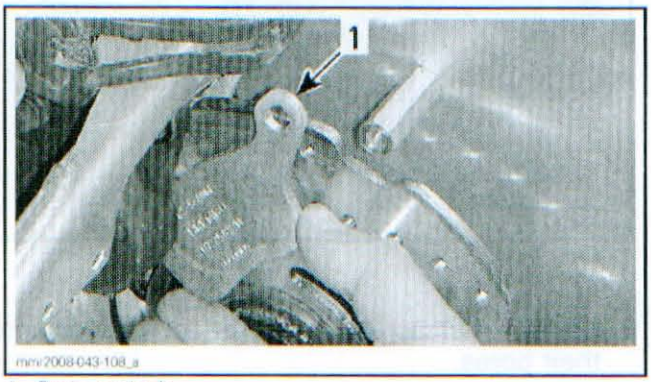

mmr2008-043-108_a

1. Brake pad tab

12. Install brake pad pin.
13. Tighten pin to 10 N•m (89 lbf•**in**).
14. Install clip on brake pad pin. If the clip seems loose, replace it with a new one.
15. Make sure spring ends on brake pads pins are correctly installed as per the following pictures.


mdd2009-001-236

CORRECT

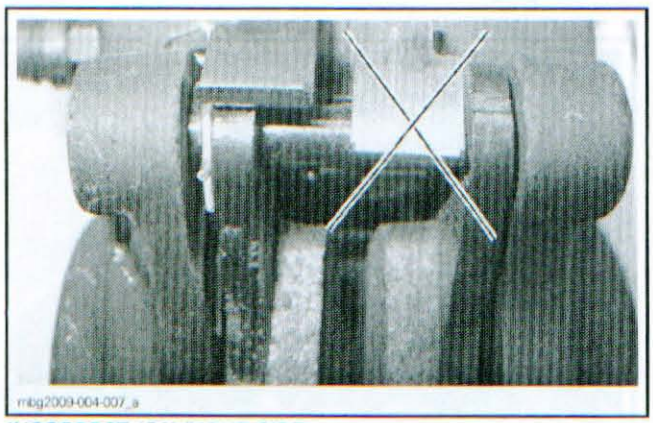
mbg2009-004-007_a

INCORRECT (ON RIGHT SIDE)

16. Operate the brake lever several times to bring the brake pads into contact with the disc brake.
17. Check brake fluid level in master cylinder and refill if necessary.
18. Install the diaphragm and the reservoir cover.
19. Install the disc brake protective cover.
20. Ride the vehicle a few minutes to make sure the repair is successful.

CALIPER

Caliper Removal

1. Open the RH side panel.
2. Refer to *CHAINCASE AND REVERSE* subsection and carry out the following steps.
   - 2.1 Remove chaincase cover.
   - 2.2 Loosen drive chain.
   - 2.3 Remove lower sprocket.
3. Open LH side panel.
4. Remove drive belt guard support. Refer to *DRIVE BELT* subsection.

NOTE: If the caliper is not replaced, omit steps 5 and 6 concerning the brake system draining and brake hose removal.

5. Drain the brake system, refer to *BRAKE FLUID REPLACEMENT* in this subsection.
6. Remove the Banjo fitting and discard the sealing washers.

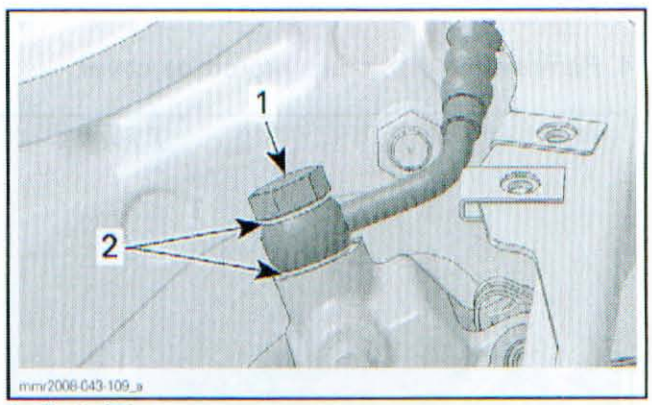

mmr2008-043-109_a

1. Banjo fitting
2. Sealing washers

7. Remove the brake disc protective cover.

www.midwestmanuals.com

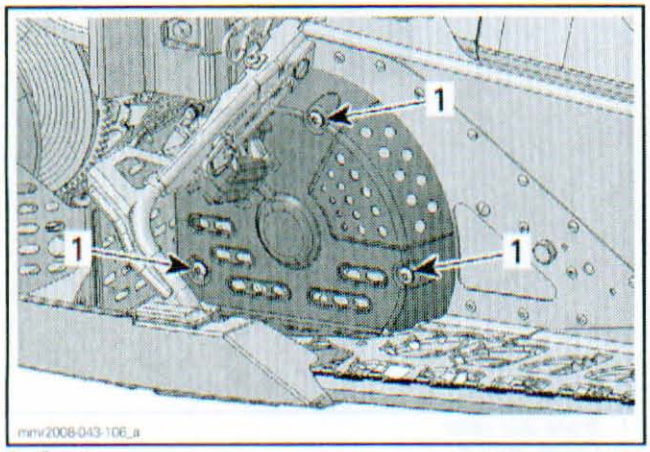

1. Screws

8. Lift the rear of vehicle and release track tension completely. Refer to *TRACK* subsection.
9. Turn driven pulley to align brake disc slots with caliper bracket screws.
10. Remove caliper screws (4) behind brake disc.

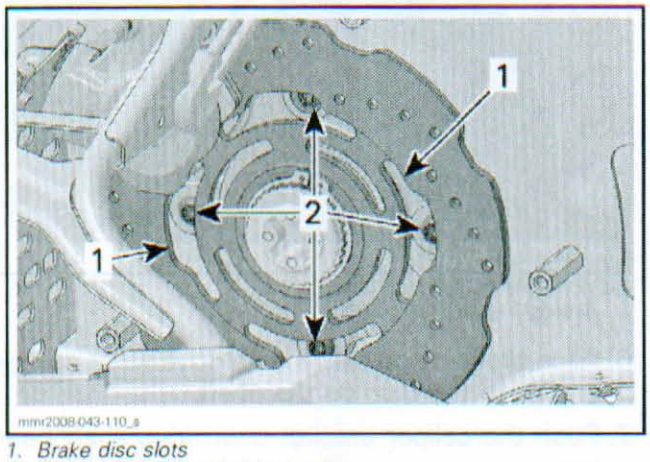

1. Brake disc slots
2. Caliper screws behind brake disc

11. Pull the drive axle assembly (brake disc, caliper and bearing) from LH side.

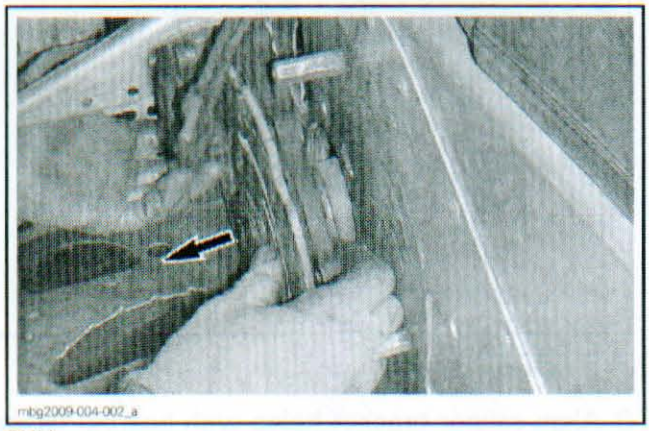

PULL

12. Remove *BRAKE PADS*, see procedure in this section.
13. Install the CALIPER PULLER (P/N 529 036 145) on the brake caliper through brake disc slots.

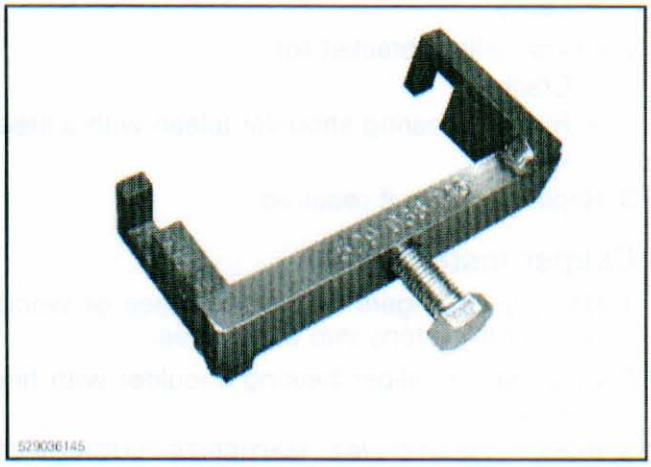

NOTE: Make sure puller tabs are correctly engaged on caliper.

14. Install the PROTECTIVE CAP (P/N 529 036 150) between caliper puller bolt and plastic cap.

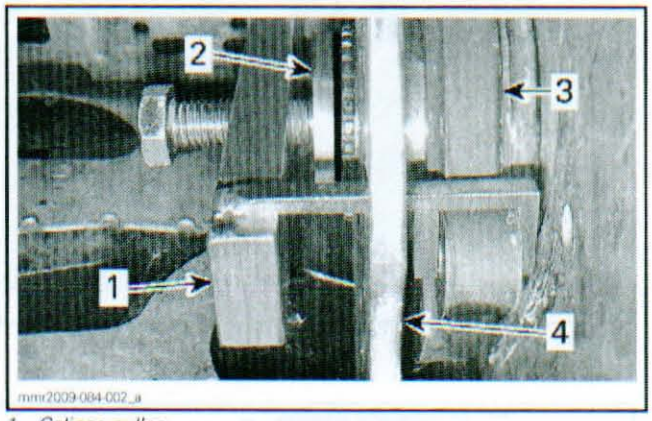

1. Caliper puller
2. Protective cap
3. Caliper bracket
4. Brake disc

15. Tighten caliper puller bolt to separate caliper from drive axle bearing.

NOTICE **Never use an impact tool to operate caliper puller. The caliper or the puller could break.**

16. When brake disc is out of splines, remove it.
17. Remove caliper.

NOTICE **Do not let caliper hangs by the hose and do not stretch or twist the hose.**

www.midwestmanuals.com

Caliper Inspection

1. Check pistons for:
   - Rust
   - Scratches
   - Leaks.
2. Check caliper bracket for:
   - Cracks
   - Rust on bearing shoulder (clean with a steel wood).
3. Replace caliper if required.

Caliper Installation

1. Using your fingers or a small piece of wood, push both pistons into their bores.
2. Clean brake caliper bearing shoulder with fine steel wool.
3. Apply LOCTITE 767 (ANTISEIZE LUBRICANT) (P/N 293 800 070) on drive shaft splines and on caliper bracket bearing shoulder.

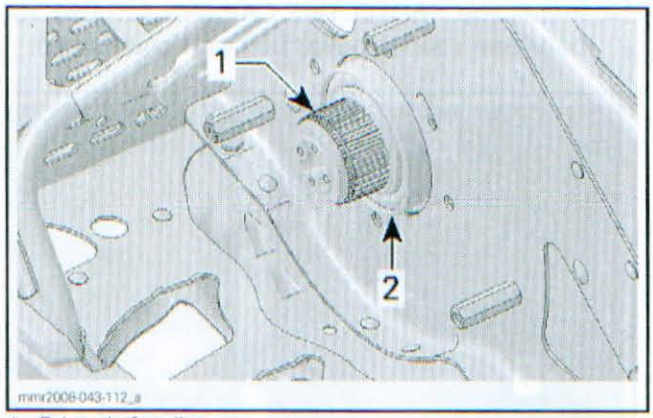

1. Drive shaft splines
2. Drive shaft bearing

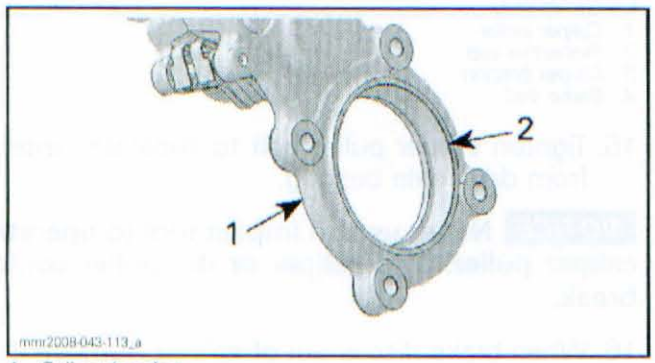

1. Caliper bracket
2. Bearing shoulder

4. Insert brake disc into caliper. The brake disc collar must be inserted into caliper bracket.

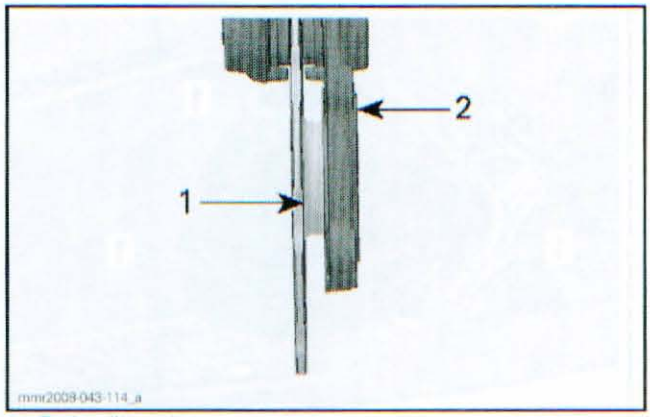

1. Brake disc collar
2. Caliper bracket

5. Ensure bearing flange is properly locked. Tabs must be properly inserted in frame.

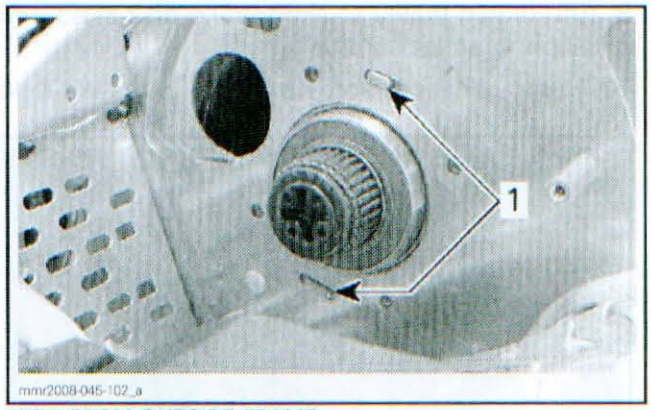

VIEW FROM OUTSIDE FRAME
1. Bearing flange locking tabs

6. Align brake disc splines with drive shaft splines and push the disc on the shaft.
7. Push the caliper bracket over drive shaft bearing.

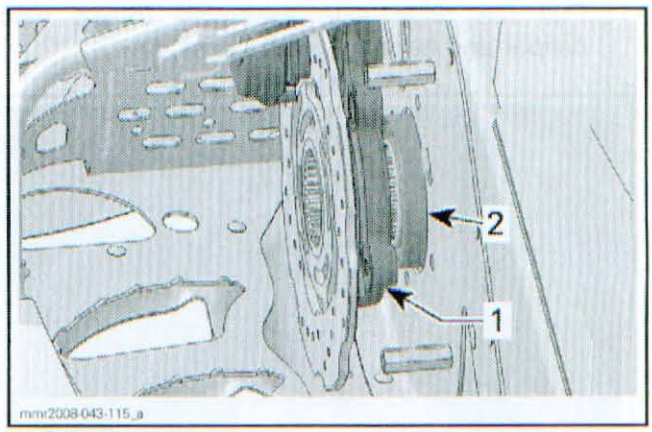

1. Caliper bracket
2. Drive shaft bearing

8. Align caliper bracket holes with bearing flange holes and install caliper screws.

www.midwestmanuals.com

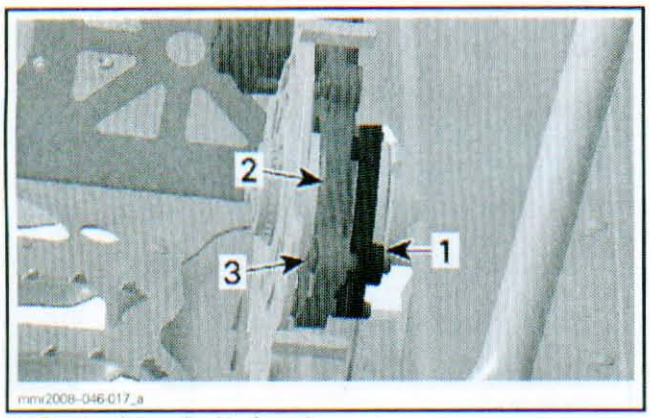

1. Bearing flange (inside frame)
2. Caliper bracket
3. Caliper screws

9. **HAND TORQUE** each caliper bracket screws evenly in a criss-cross pattern until bracket is correctly positioned against frame.

NOTICE Never use an air tool to tighten caliper screws. The caliper bracket could crack.

10. Torque screws to 25 N•m (18 lbf•ft).
11. Install *BRAKE PADS*, see procedure above in this section.
12. Install the brake disc circlip.
13. Apply brake fluid on Banjo fitting threads.
14. Install the Banjo fitting with two **NEW** sealing washers.
15. Torque Banjo fitting to 35 N•m (26 lbf•ft).
16. Fill and bleed the brake system. Refer to *BRAKE FLUID REPLACEMENT* in this section.
17. Install all other removed parts.
18. Check the operation of the brake carefully before riding the snowmobile.

BRAKE DISC

Brake Disc Inspection

Prior Brake Disc Removal

1. Remove the disc brake protective cover.
2. Check for scoring, cracking or bending, replace as required.
3. Measure brake disc thickness. If the brake disc is out of specification, replace it with a new one.

NOTICE Brake disc should never be machined.

BRAKE DISC THICKNESS	
Minimum thickness	4.5 mm (.177 in)

After Brake Disc Removal

1. Check brake disc splines and drive shaft splines for wear or other damages. Replace defective parts.

Brake Disc Removal and Installation

Use the same procedure as for the caliper.

MASTER CYLINDER

Master Cylinder Removal

NOTE: If the master cylinder is not replaced, omit the next steps concerning the brake system draining and brake hose removal.

1. Drain the brake system, refer to *BRAKE FLUID REPLACEMENT* at the beginning of this section.
2. Remove the Banjo fitting and discard the sealing washers.

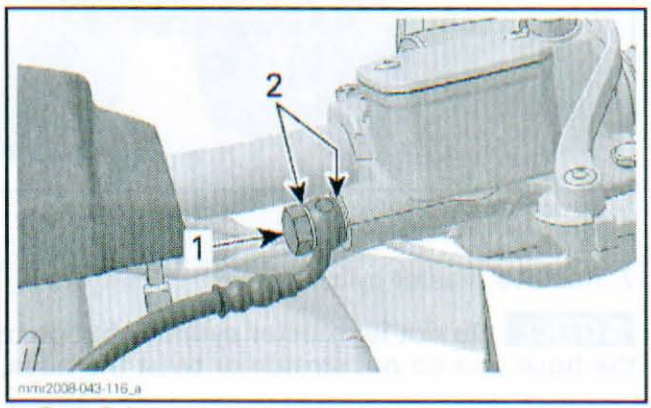

1. Banjo fitting
2. Sealing washers

3. Remove steering pad.

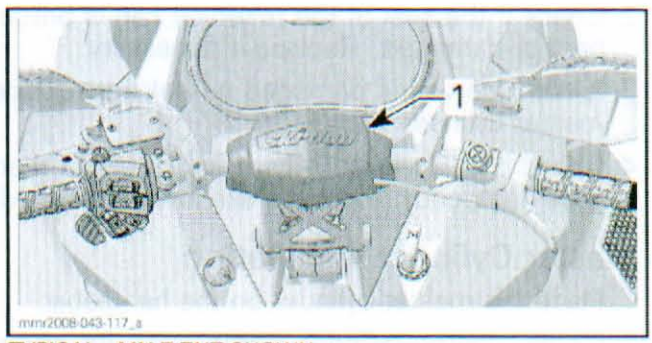

TYPICAL - MX Z TNT SHOWN
1. Steering pad

4. Unplug the LH connector.

www.midwestmanuals.com

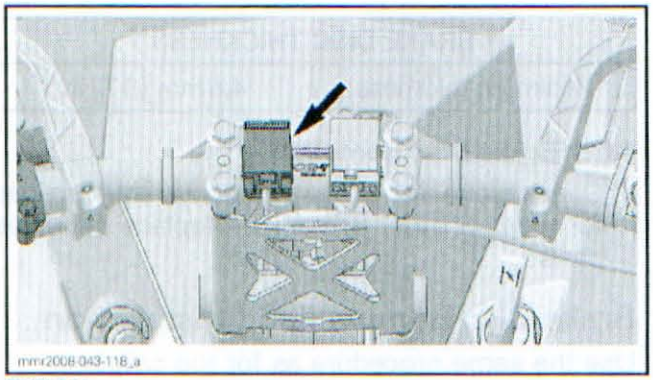

TYPICAL

5. Cut locking tie securing brake light switch wiring to handlebar.
6. Remove screws and clamp securing master cylinder to handlebar.

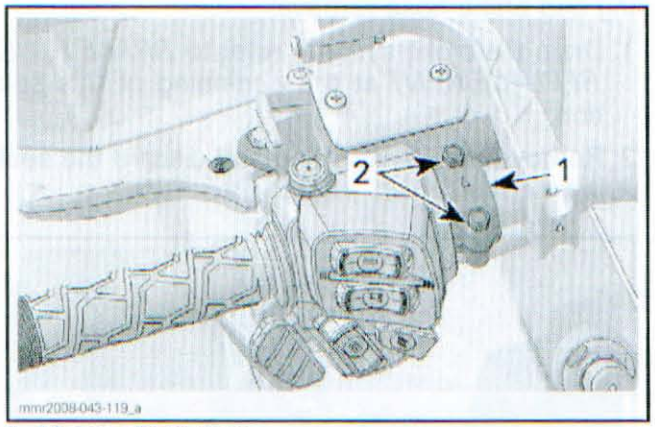

1. *Master cylinder clamp*
2. *Master cylinder clamp screws*

7. Remove master cylinder.

NOTICE **Do not let master cylinder hangs by the hose and do not stretch or twist the hose.**

Master Cylinder Inspection

1. Discard all remaining fluid inside master cylinder reservoir.
2. Check if the seal of the reservoir cap is brittle, hard or damaged. Replace if necessary.
3. If the reservoir is damaged or leaking, replace master cylinder.
4. Check if brake lever is bent, cracked or otherwise damaged. Replace brake lever if required.

Master Cylinder Installation

1. Place the master cylinder on the handlebar.
2. Install master cylinder clamp with its arrow pointing toward the front of vehicle.

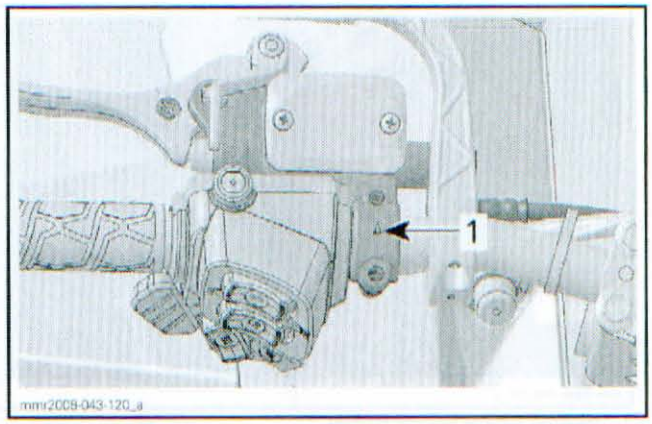

1. *Arrow on clamp*

3. Install master cylinder clamp screws and tighten loosely.
4. With the handlebar in a straight ahead position, place the reservoir parallel to the ground.
5. Tighten brake lever clamp screws to 10 N•m (89 lbf•**in**).
6. Install the Banjo fitting with two **NEW** sealing washers.
7. Torque Banjo fitting to 18 N•m (159 lbf•**in**).
8. Fill and bleed the brake system. Refer to *BRAKE FLUID REPLACEMENT* at the beginning of this subsection.
9. Connect brake light switch connector.
10. Install steering cover.

BRAKE LEVER

Brake Lever Replacement

Lubricate brake lever pivot using XP-S SYNTHETIC GREASE (P/N 293 550 010).

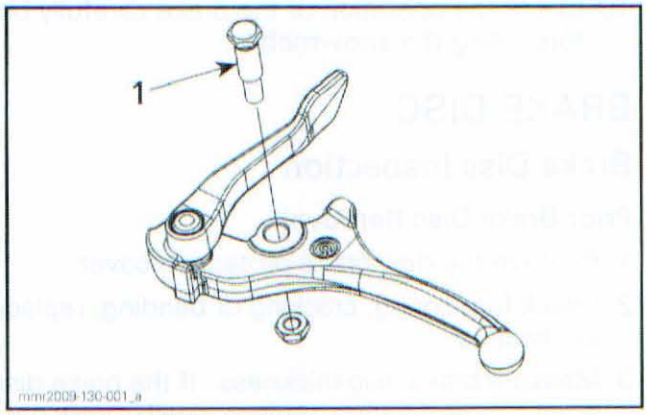

1. *Lubricate brake lever pivot*

Torque pivot nut of brake lever to 6 N•m (53 lbf•**in**).

www.midwestmanuals.com

BRAKE LIGHT SWITCH

Brake Light Switch Continuity Test

1. Remove steering cover.
2. Disconnect brake light switch connector.

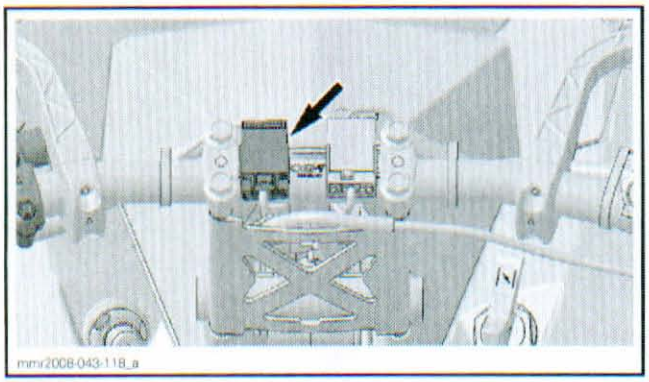

TYPICAL

3. Set the FLUKE 115 DIGITAL MULTIMETER (P/N 529 035 868) to Ω.
4. Release brake lever.
5. Measure resistance as per the following table.

TEST PROBES	RESISTANCE
Pin 2 (WH)	Open (OL)
Pin 3 (RD/YL)	

6. Press and hold brake lever.
7. Measure resistance as per the following table.

TEST PROBES	RESISTANCE
Pin 2 (WH)	Close to 0 Ω
Pin 3 (RD/YL)	

If readings do not correspond to the above tables, replace switch.

If readings correspond to the above tables, check fuse, wiring and connectors going to switch. Repair or replace defective part(s). Refer to *LIGHTS, GAUGE AND ACCESSORIES* subsection.

Brake Light Switch Removal

1. Slip a small screwdriver between brake light switch and brake lever and separate them.

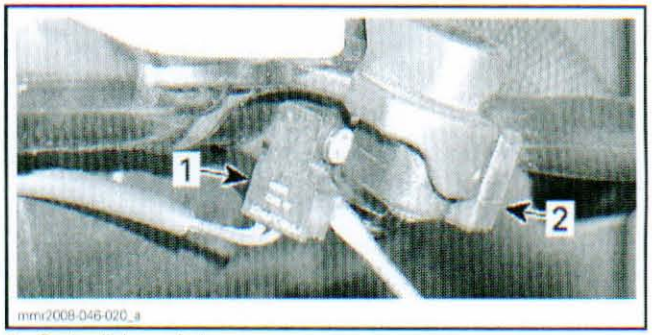

1. Brake light switch
2. Brake lever

2. Remove the steering cover and unplug the LH connector.

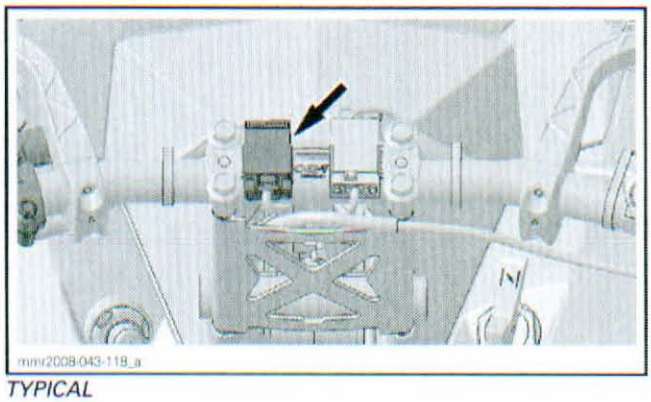

TYPICAL

3. Cut all locking ties securing switch wires.
4. Remove switch wires from connector.

NOTE: Check wires location for reinstallation.

Brake Light Switch Installation

1. Plug switch wires into connector.
2. Squeeze brake lever.
3. Insert the both tabs of switch into brake lever body.
4. Plug the connector.
5. Check if switch is working properly.
6. Install new locking ties and the steering cover.

www.midwestmanuals.com

www.midwestmanuals.com

CHAINCASE AND REVERSE

SERVICE TOOLS

Description	Part Number	Page
BEARING PULLER/PUSHER	529 036 111	364
BEARING PULLER/PUSHER	529 036 112	364
ECM ADAPTER TOOL (2 CONNECTORS)	420 277 010	359
FLUKE 115 DIGITAL MULTIMETER	529 035 868	357–360

SERVICE TOOLS – OTHER SUPPLIER

Description	Part Number	Page
SNAP-ON SEAL PULLER	YA105	364

SERVICE PRODUCTS

Description	Part Number	Page
XP-S SYNTHETIC CHAINCASE OIL	413 803 300	351

www.midwestmanuals.com

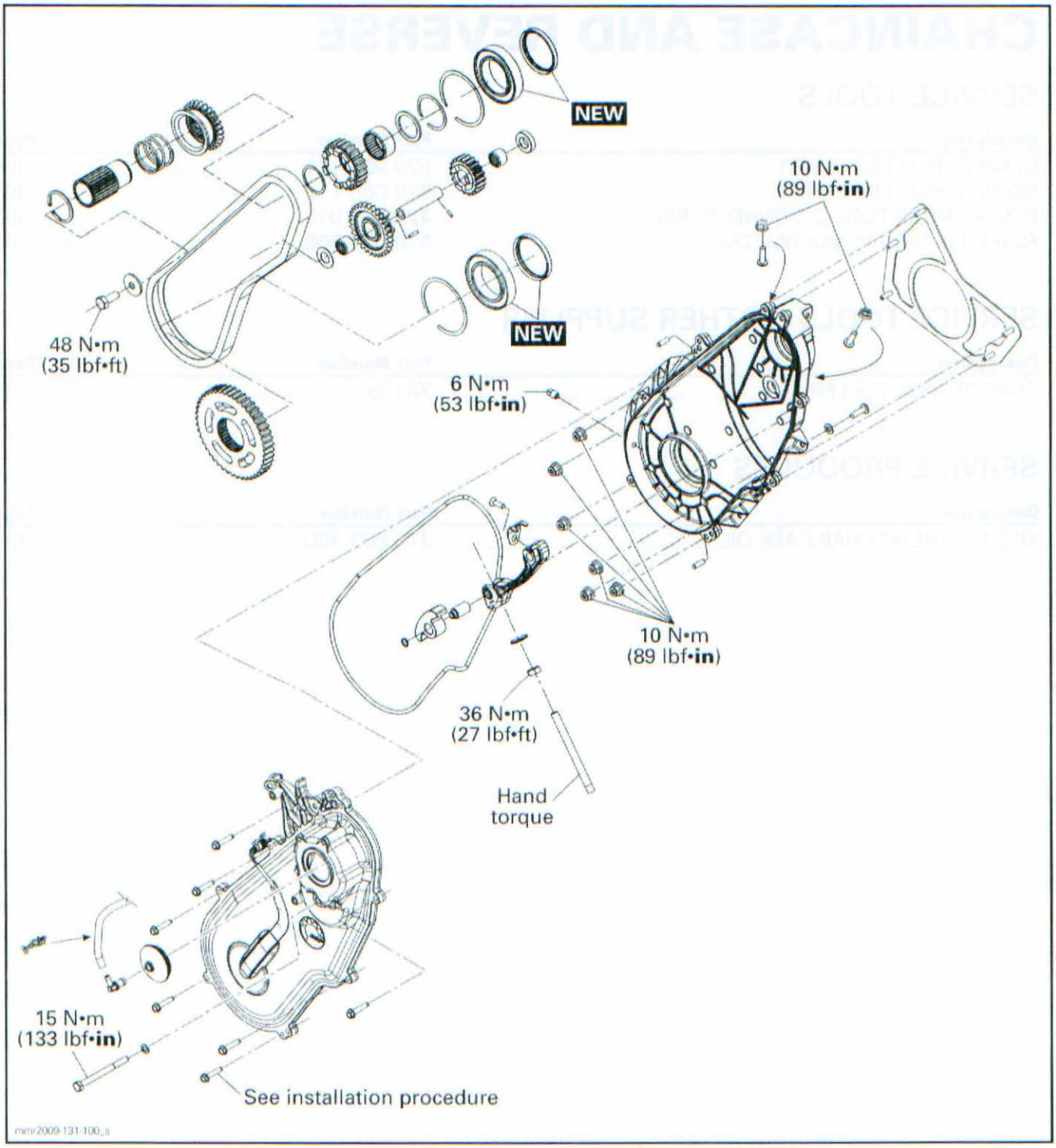

www.midwestmanuals.com

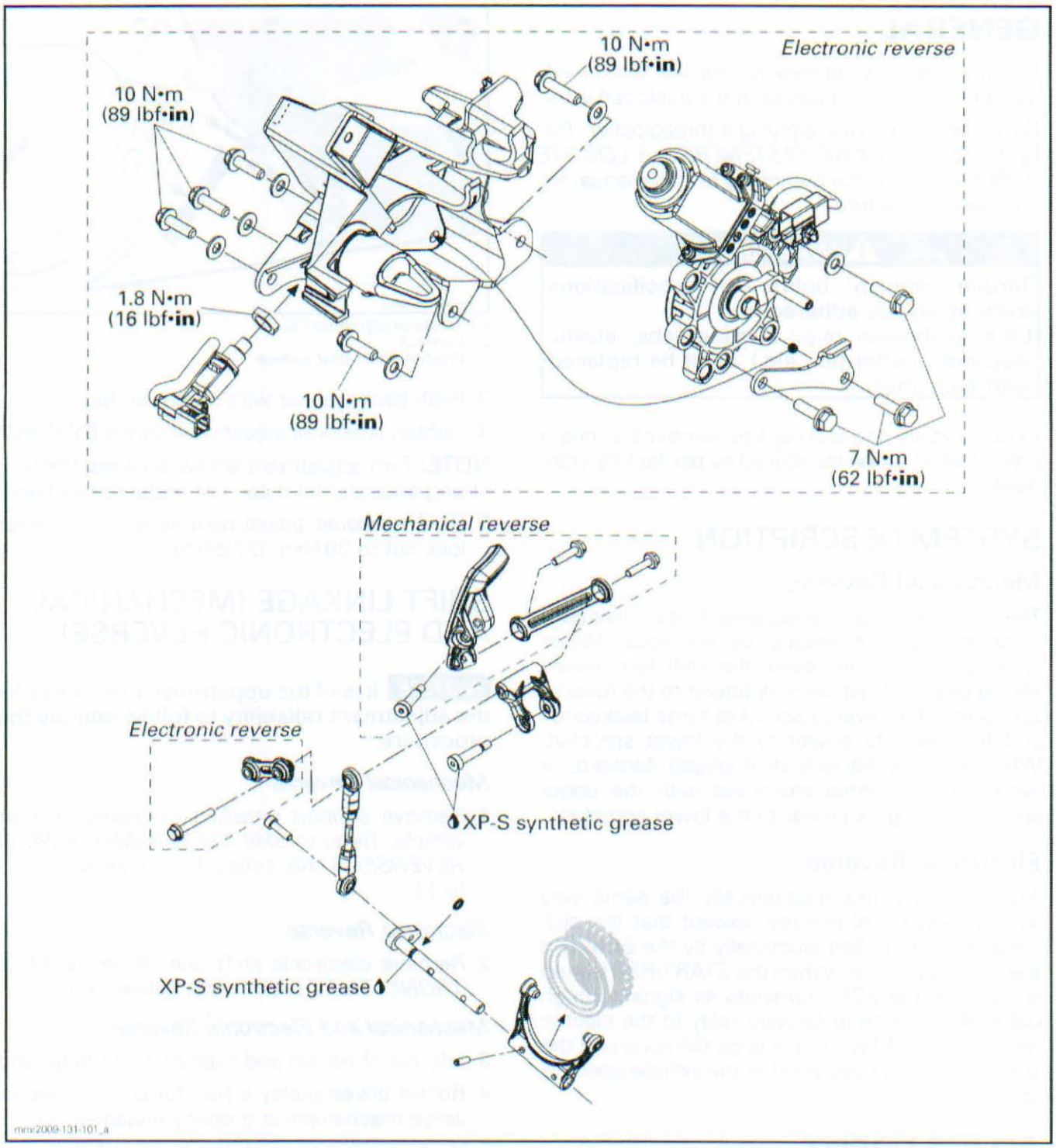

www.midwestmanuals.com

GENERAL

During assembly/installation, use the torque values and service products as in the exploded view.

Clean threads before applying a threadlocker. Refer to *SELF-LOCKING FASTENERS* and *LOCTITE APPLICATION* at the beginning of this manual for complete procedure.

⚠ WARNING

Torque wrench tightening specifications must be strictly adhered to.
Locking devices (e.g.: locking tabs, elastic stop nuts, cotter pin, etc.) must be replaced with new ones.

Hoses, cables and locking ties removed during a procedure must be reinstalled as per factory standards.

SYSTEM DESCRIPTION

Mechanical Reverse

This reverse system integrated in the chaincase is controlled mechanically by link rods. When reverse handle is engaged, the shift fork moves sliding gear and switches its power to the reverse sprocket. This reverse sprocket turns backwards and transmits its power to the lower sprocket. When the mechanism is engaged forward, it works like a normal chaincase with the upper sprocket giving its power to the lower sprocket.

Electronic Reverse

This system works mechanically the same way as the mechanical reverse, except that the sliding gear is controlled electrically by the ECM and the electrical motor. When the START/RER button is pressed, the ECM transmits its signal through either the reverse or forward relay to the electric motor. The ECM will not engage the reverse if the engine RPM is above 2000 or the vehicle speed is above 1 km/h.

ADJUSTMENT

DRIVE CHAIN

1. Remove muffler. Refer to *EXHAUST SYSTEM* subsection.
2. Unscrew lock nut on tensioner adjustment screw.

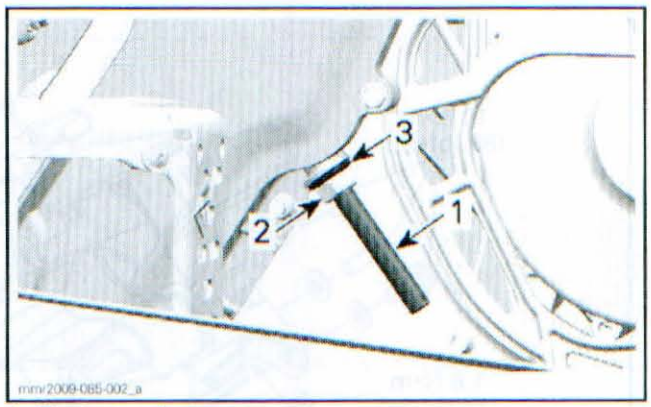

1. *Tensioner adjustment screw*
2. *Lock nut*
3. *Washer with rubber surface*

3. Push back washer with rubber surface.
4. Tighten tensioner adjustment screw **BY HAND**.

NOTE: Turn adjustment screw until resistance is strong enough that it can not be turned by hand.

5. Hold tensioner adjustment screw and tighten lock nut to 36 N•m (27 lbf•ft).

SHIFT LINKAGE (MECHANICAL AND ELECTRONIC REVERSE)

NOTICE It is of the uppermost importance for the adjustment reliability to follow entirely this procedure.

Mechanical Reverse

1. Remove support attached to chaincase from vehicle. Refer to *SHIFT LEVER (MECHANICAL REVERSE)* in this subsection. Follow steps 1 to 11.

Electronic Reverse

2. Remove electronic shift unit. Refer to *ELECTRONIC SHIFT UNIT* in this subsection.

Mechanical and Electronic Reverse

3. Lift rear of vehicle and support it off the ground.
4. Rotate driven pulley a few turns to ensure reverse mechanism is properly engaged.
5. Verify gap between shifter lever and chaincase front stopper using a feeler gauge. Refer to the following table.

SHIFT LINKAGE ADJUSTMENT	
Gap no. A	0.4 mm to 0.6 mm (.016 in to .024 in)

www.midwestmanuals.com

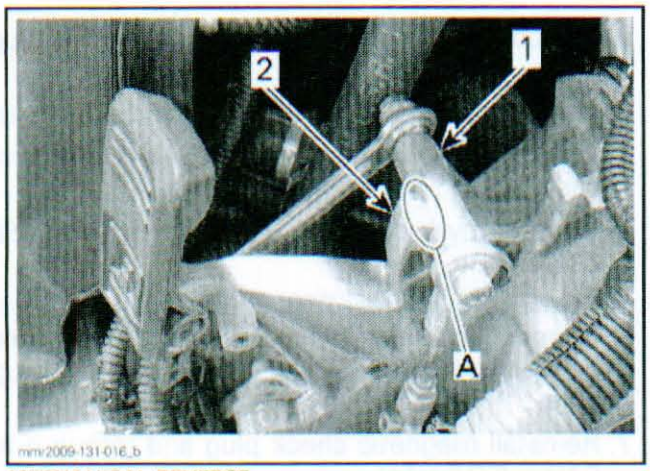

MECHANICAL REVERSE
1. *Shifter lever*
2. *Chaincase front stopper*

A. Gap = 0.4 mm to 0.6 mm (.016 in to .024 in)

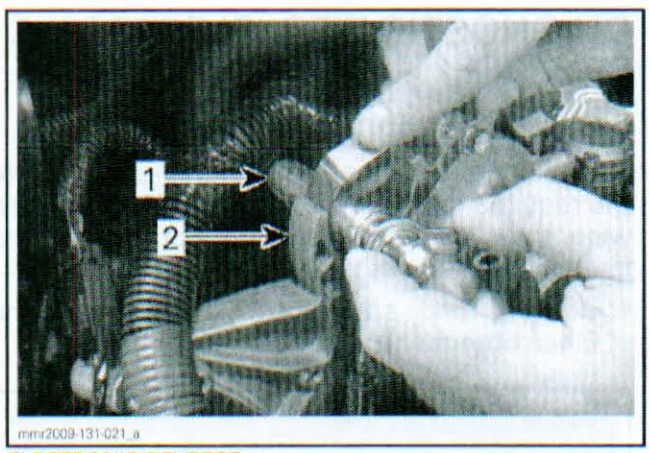

ELECTRONIC REVERSE
1. *Shifter lever*
2. *Chaincase front stopper*

6. If gap is out of specification, adjust shifter link rod as follows.

6.1 Unscrew link rod lock nuts.

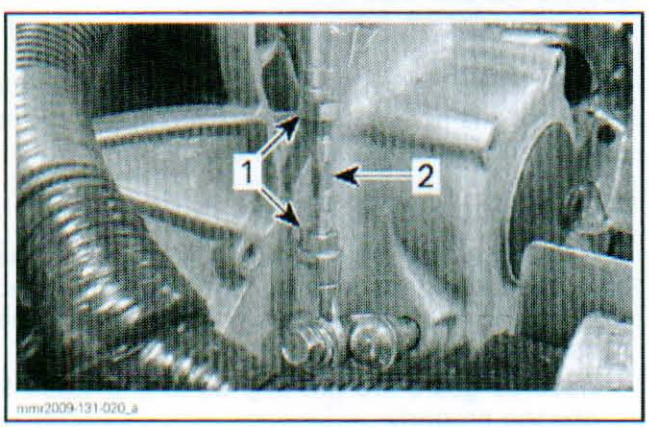

1. *Lock nuts*
2. *Link rod*

6.2 Turn link rod accordingly.

NOTE: Turn the link rod clockwise to reduce the gap and counterclockwise to increase the gap.

6.3 Tighten link rod lock nuts.

7. Engage and release reverse mechanism 10 times using reverse handle or shifter lever.



REVERSE HANDLE (MECHANICAL REVERSE)

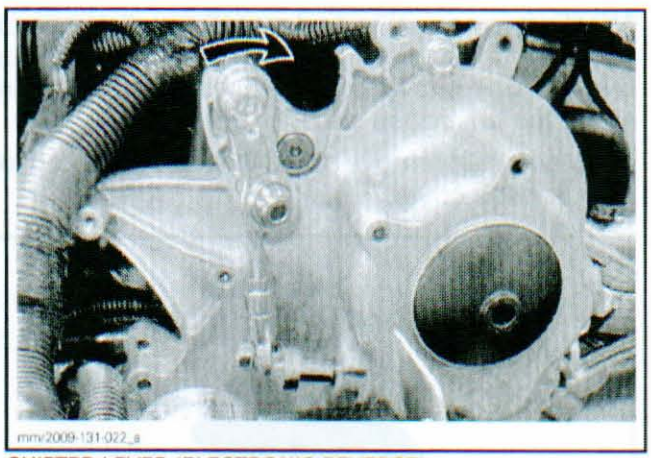

SHIFTER LEVER (ELECTRONIC REVERSE)

8. Rotate driven pulley a few turns to ensure reverse mechanism is properly engaged.
9. Verify again adjustment gap as per step 5. Readjust if necessary.

MAINTENANCE

CHAINCASE OIL

Recommended Chaincase Oil

Use XP-S SYNTHETIC CHAINCASE OIL (P/N 413 803 300).

NOTICE Use only the recommended type oil when servicing. Do not mix synthetic oil with other types of oil.

www.midwestmanuals.com

Chaincase Oil Level Verification

1. Place vehicle on a level surface.
2. Remove magnetic check plug on the left side of chaincase. Oil level must be equal with the lower edge.

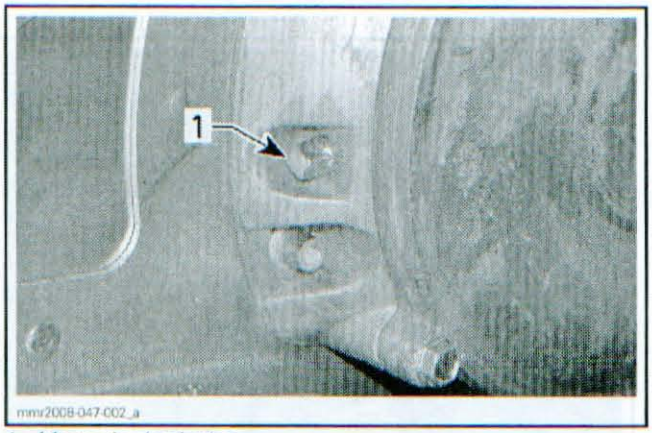

1. Magnetic check plug

3. Remove metal particles from magnetic check plug.

NOTE: It is normal to find metallic particles stuck to magnetic check plug. If bigger pieces of metal are found, remove the chaincase cover and inspect the chaincase parts.

4. To add oil, remove the filling plug on top of chaincase cover.

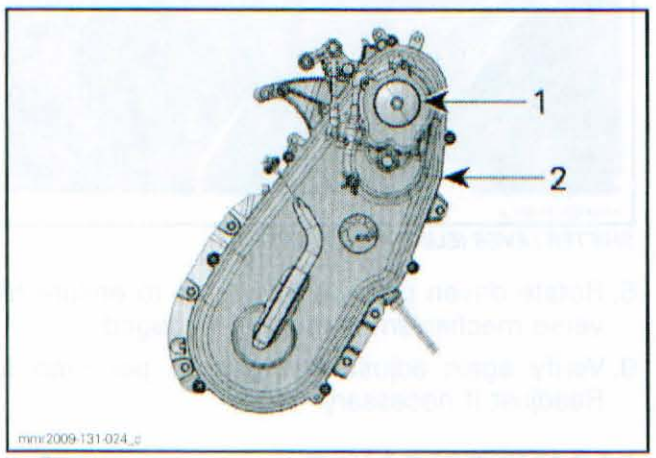

1. Filling plug
2. Chaincase cover

5. Pour recommended oil in chaincase by the filler hole until oil comes out by the magnetic check plug hole.
6. Reinstall magnetic check plug and torque it to 6 N•m (53 lbf•**in**).

Chaincase Oil Replacement

1. Place vehicle on a level surface.
2. Position a drain pan under chaincase drain plug area.
3. Loosen chaincase cover screws and pull cover.
4. Wait a while to allow oil to flow out of chaincase.
5. Tighten cover correctly. Refer to *CHAINCASE COVER*.
6. Pour approximately 250 ml (8.5 U.S. oz) of recommended oil in chaincase by the filling hole until oil comes out by the magnetic check plug hole.
7. Reinstall magnetic check plug and torque it to 6 N•m (53 lbf•**in**).

TROUBLESHOOTING

DIAGNOSTIC TIPS (ELECTRONIC REVERSE)

B.U.D.S. Configuration

If the electronic reverse is not working, make sure the required option is selected in B.U.D.S. Otherwise, the electronic reverse will not work and no fault code will be set.

1. Connect and start B.U.D.S. to check the **Electromechanical reverse** option.

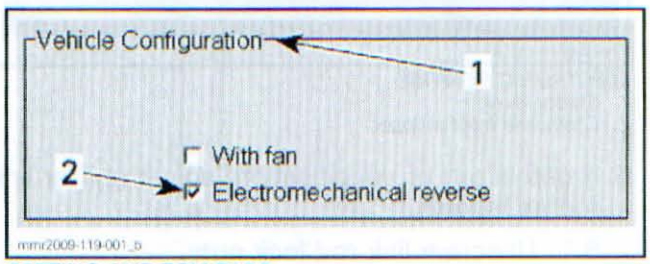

SETTING AND ECM TABS
1. Vehicle Configuration area
2. Check Electromechanical reverse

NOTE: If the option is checked in B.U.D.S. and the vehicle is not equipped with the electronic reverse, false fault code(s) will be set.

Fault Code P0736

The fault code P0736 can appear for different reasons that are not necessarily a failure of the electronic reverse. It can appear for the following reasons:

– Reverse gears are not aligned in chaincase to engage properly.

If fault code appears:

– Clear the fault using B.U.D.S.
– Lift rear of vehicle and support it off the ground.

www.midwestmanuals.com

– Rotate driven pulley a few turns to move gears in chaincase.
– Retry changing gears.

If fault code appears again:
– Check drive belt height. (Refer to *DRIVE BELT* subsection)
– Check shift linkage adjustment. (see procedure in this subsection).

If fault code persist:
– Refer to *TESTING SEQUENCE* below.

TESTING SEQUENCE (ELECTRONIC REVERSE)

Electronic Reverse Does Not Engage

First, make sure the following settings are as per specifications:
– Drive belt height
– Shift linkage adjustment.

If B.U.D.S is properly configured, drive belt and shift linkage are properly adjusted, follow this testing sequence to diagnose problem:

1. Check reverse position switch (RVPS) continuity.
2. Check electronic reverse fuse.
3. Check engine connector.
4. Check electronic reverse relays continuity.
5. Check electronic reverse motor operation.
6. Check input voltage to electronic reverse motor.
7. Check input voltage to electronic reverse relays.
8. Check electronic reverse relays ground (motor actuation).
9. Check electronic reverse relays ground signal.
10. Check ECM ground continuity (relay).

Refer to the appropriate topic to see the complete testing procedures.

PROCEDURES

SHIFT LEVER (MECHANICAL REVERSE)

Shift Lever Removal

1. Remove muffler. Refer to *EXHAUST SYSTEM* subsection.
2. Remove fuse box from fuse box holder using upper retaining clip.

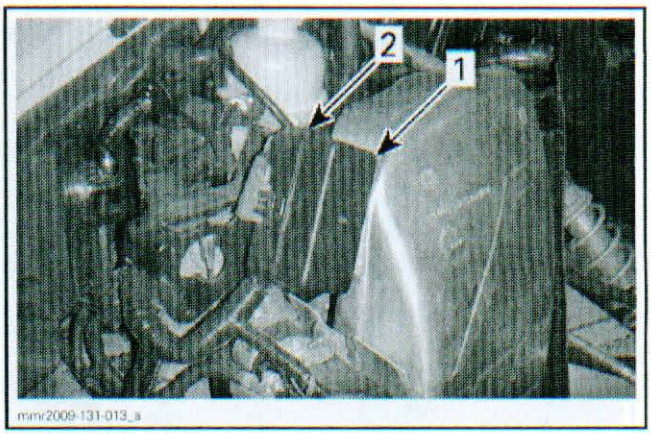

1. *Fuse box*
2. *Upper retaining clip*

3. Remove communication connector from its housing.
4. Cut main harness locking tie.
5. Detach retaining tie from chaincase vent hose.
6. Remove chaincase vent hose from filling plug.
7. Detach fuel pressure regulator hose from support.

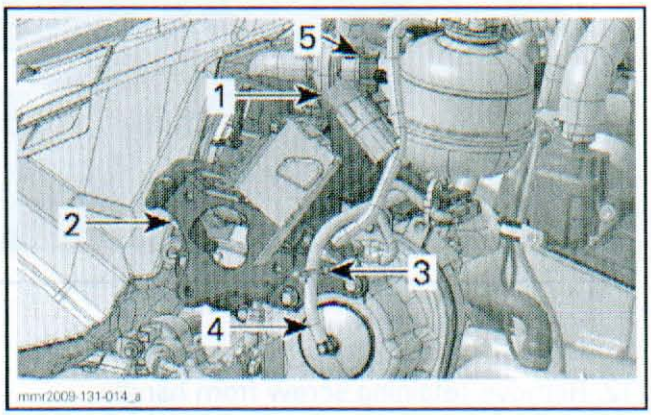

1. *Communication connector*
2. *Main harness locking tie*
3. *Retaining tie*
4. *Chaincase vent hose*
5. *Fuel pressure regulator hose*

8. Remove coolant reservoir retaining screw.

www.midwestmanuals.com

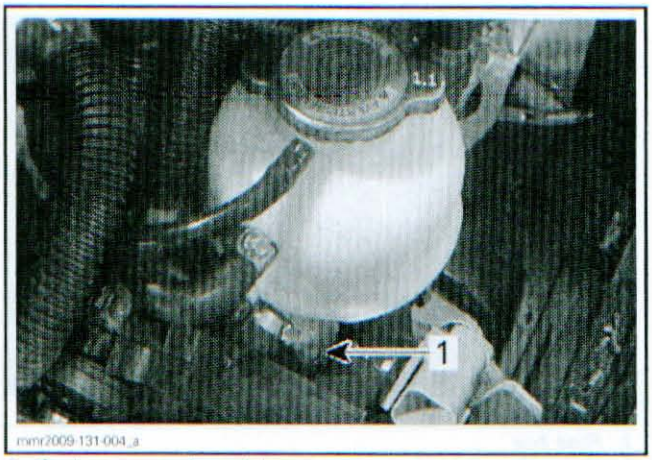

1. Coolant reservoir retaining screw

9. Disconnect RVPS switch connector.
10. Remove retaining screws from support.
11. Remove support from vehicle.

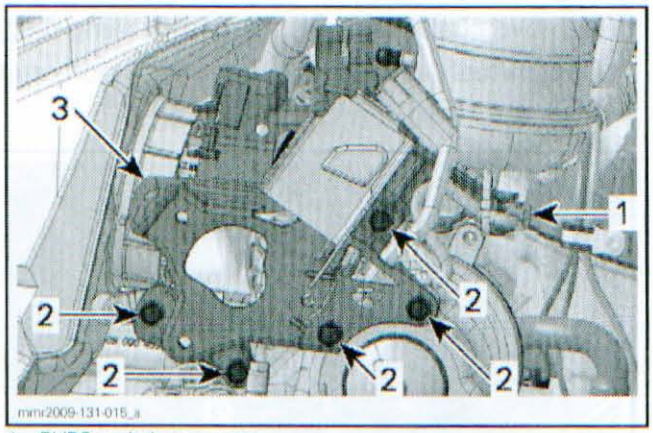

1. RVPS switch connector
2. Support retaining screws
3. Support

12. Remove retaining screw from handle.
13. Remove shift lever screw.

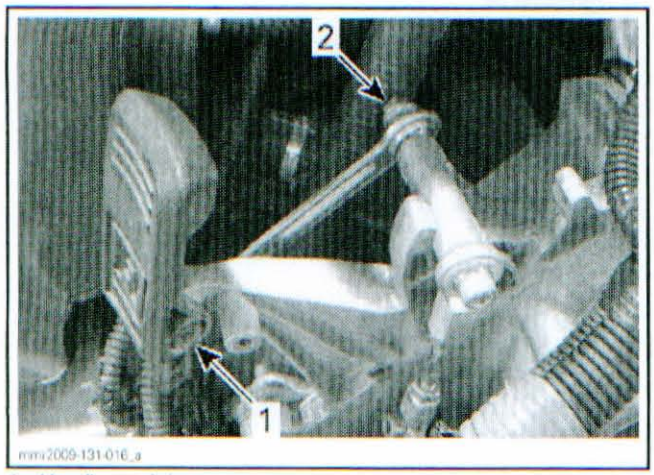

1. Handle retaining screw
2. Shift lever screw

14. Remove shift lever from vehicle.

Shift Lever Installation

The installation procedure is the reverse of removal, however pay attention to the following.

Lubricate shift lever pivots and moving parts.

Torque retaining screws of support attached to chaincase to 10 N•m (89 lbf•**in**).

ELECTRONIC SHIFT UNIT

Electronic Shift Unit Removal

⚠ WARNING

Battery BLACK (–) cable must always be disconnected first and connected last.

1. Disconnect BLACK negative cable from battery negative post.
2. Remove muffler. Refer to *EXHAUST SYSTEM* subsection.
3. Remove fuse box from fuse box holder using upper retaining clip.

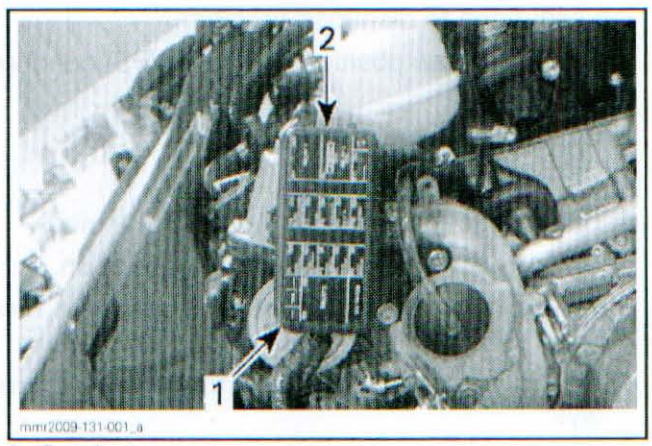

1. Fuse box
2. Upper retaining clip

4. Remove communication connector from its housing.
5. Cut main harness locking tie.
6. Detach retaining tie from chaincase vent hose.
7. Remove chaincase vent hose from filling plug.
8. Detach fuel pressure regulator hose from support.

www.midwestmanuals.com

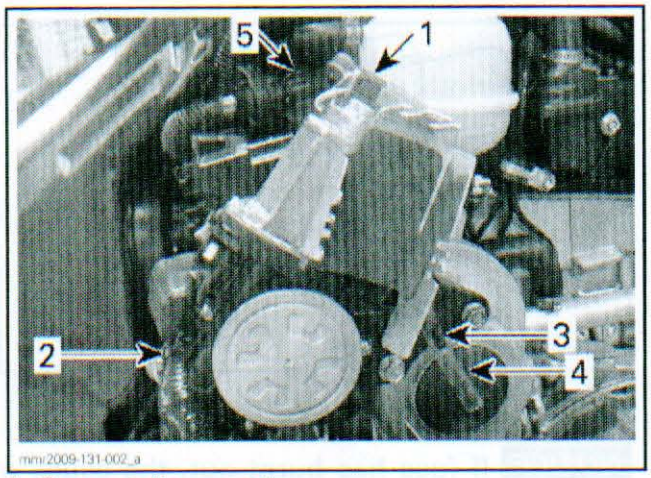

1. *Communication connector*
2. *Main harness locking tie*
3. *Retaining tie*
4. *Chaincase vent hose*
5. *Fuel pressure regulator hose*

9. Remove coolant reservoir retaining screw.

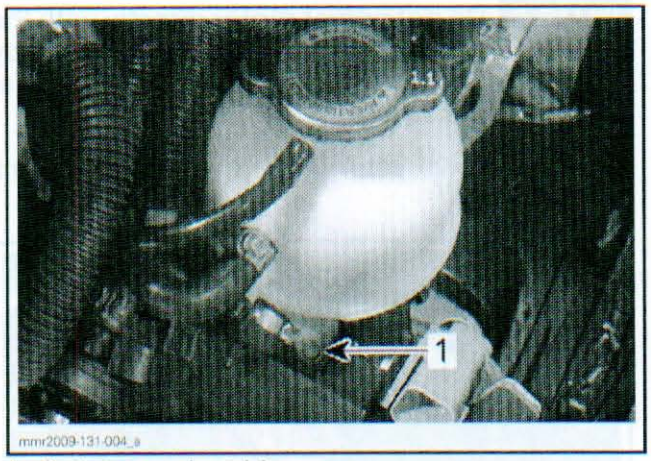

1. *Coolant reservoir retaining screw*

10. Remove retaining screws from support.

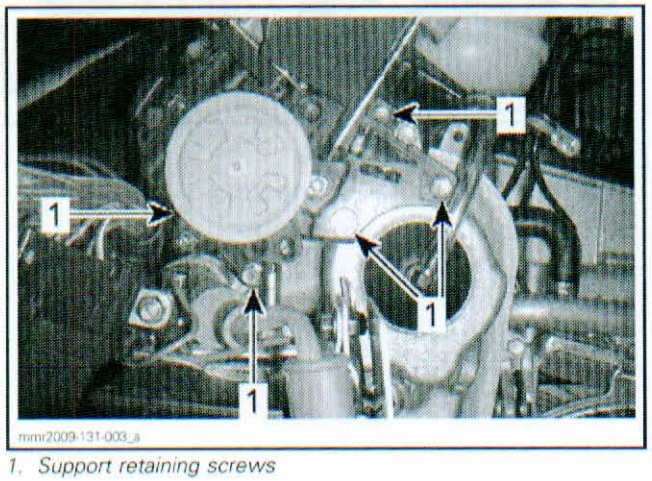

1. *Support retaining screws*

11. Remove nut from coupling shaft.

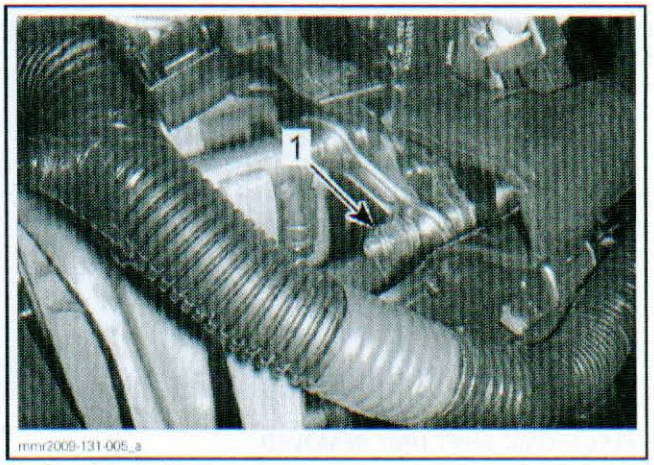

1. *Coupling shaft nut*

12. Disconnect motor connector.



1. *Motor connector*

13. Disconnect RVPS switch connector.

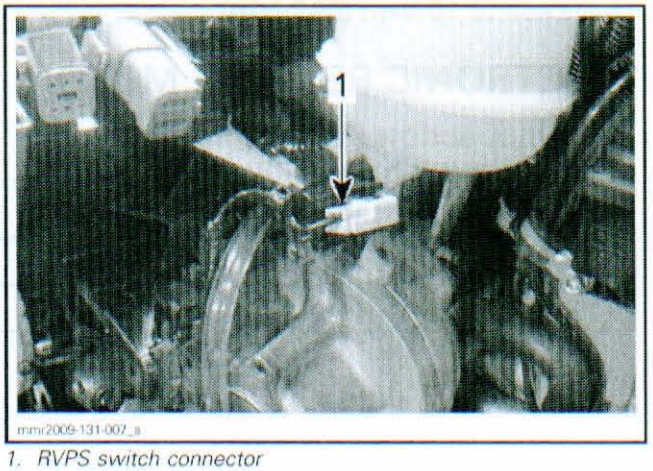

1. *RVPS switch connector*

14. Remove electronic shift unit from vehicle.

www.midwestmanuals.com

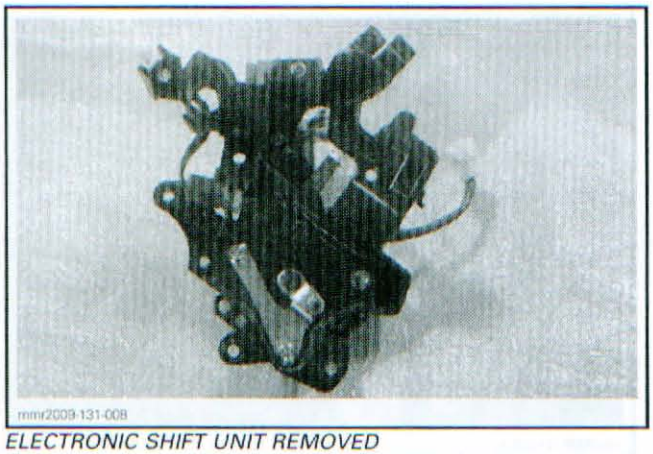

ELECTRONIC SHIFT UNIT REMOVED

Electronic Shift Unit Inspection

Inspect motor connectors for corrosion, clean if necessary.

Inspect RVPS switch for correct spring tension when pressed and released, replace if necessary.

Inspect motor coupling shaft for straightness, replace if necessary.

Inspect stopping bracket of electronic shift unit for straightness, replace if necessary.

Electronic Shift Unit Installation

The installation procedure is the reverse of removal, however pay attention to the following.

Lubricate shifter pivots and moving parts.

Torque coupling shaft nut to 7 N•m (62 lbf•**in**).

Torque retaining screws of support attached to chaincase to 10 N•m (89 lbf•**in**).

ELECTRONIC REVERSE MOTOR

Fuse Inspection (Motor)

1. Check motor fuse (F8) located in the fuse box. Replace if necessary.

MOTOR FUSE	
F8	20 A

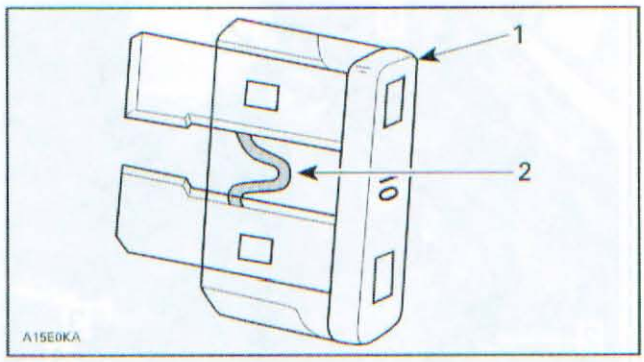

1. Fuse
2. Check if melted

NOTICE If fuse has burnt out, the cause of the malfunction should be determined and corrected before restarting.

Motor Operation Test (Electronic Reverse)

NOTICE Do not power motor directly with the battery for a long period. Apply voltage quickly to ensure that the motor will not overheat at the end of its stroke.

1. Remove lower retaining screw from shifter link rod.

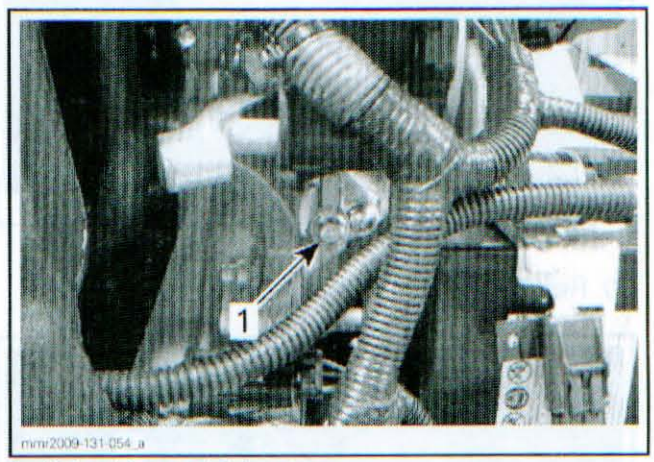

1. Link rod lower retaining screw

2. Disconnect motor connector.

www.midwestmanuals.com



1. Motor connector

3. Connect motor connector pin 2 (BLACK wire) to a 20 A suitable fuse jumper and then directly to the positive battery post.
4. Connect motor connector pin 1 (RED wire) directly to the negative battery post.

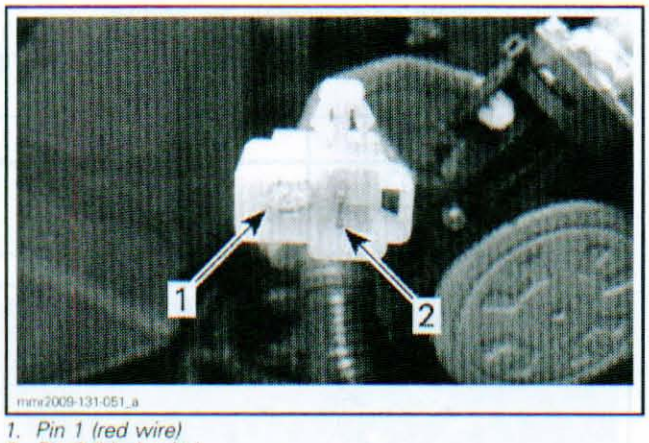

1. Pin 1 (red wire)
2. Pin 2 (black wire)

5. Verify if motor works properly and engages the reverse mechanism (link rod moves upwards).
6. Invert battery polarities and verify if motor works properly and disengages the reverse mechanism (link rod moves downwards).

Motor Input Voltage Test (Electronic Reverse)

1. Set the FLUKE 115 DIGITAL MULTIMETER (P/N 529 035 868) to Vdc.
2. Disconnect motor connector.

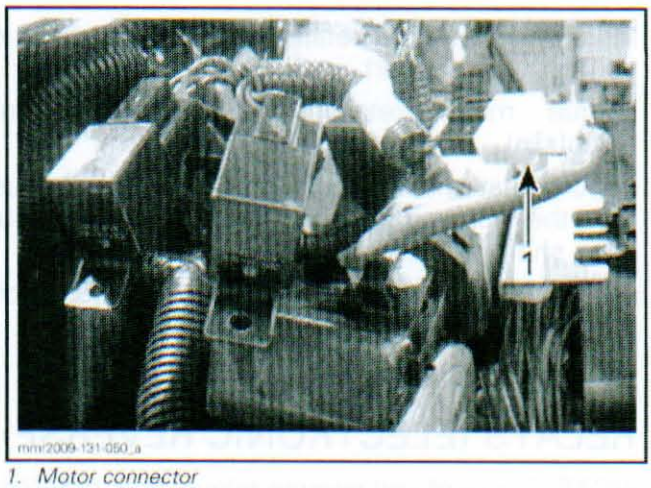

1. Motor connector

3. Start engine.
4. Press on START/RER button while engine run at idle.
5. Measure voltage between motor harness connector terminals as per the following table.

TEST PROBES	VOLTAGE
RD/YL	Battery voltage (± 12 Vdc)
BK/BU	

Motor Removal (Electronic Reverse)

1. Remove electronic shift unit. Refer to *ELECTRONIC SHIFT UNIT* in this subsection.
2. Remove motor retaining screws.

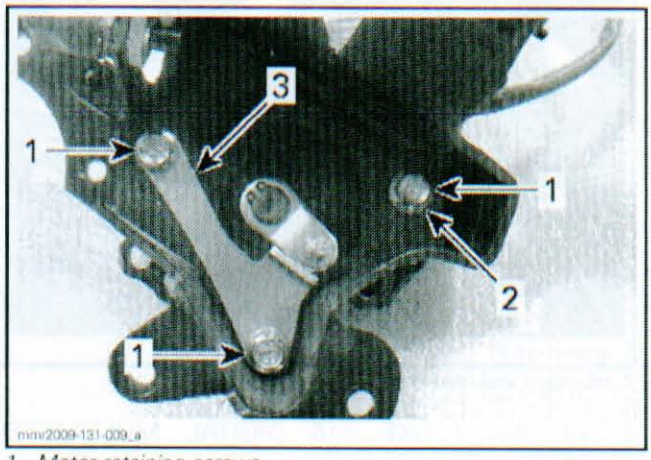

1. Motor retaining screws
2. Washer
3. Stopping bracket

3. Remove motor from unit.

Motor Installation (Electronic Reverse)

The installation procedure is the reverse of removal, however pay attention to the following.

www.midwestmanuals.com

Install washer onto retaining screw which is in contact with support.

Torque motor retaining screws to 7 N•m (62 lbf•in).

Ensure that the stopping bracket is positioned with the stopping surface toward the motor coupling shaft.

NOTE: Do not install washers onto screws which are in contact with stopping bracket.

FORWARD AND REVERSE RELAYS (ELECTRONIC REVERSE)

NOTE: Forward and reverse relays work together to control motor. Make sure to test both relays to ensure proper diagnostic.

Refer to the following table to identify forward and reverse relays.

RELAY PIN	FORWARD RELAY WIRE COLOR	REVERSE RELAY WIRE COLOR
85	BE/YL	BE/RD
30	RD/YL	BK/BU

Relay Continuity Test

1. Remove relay.

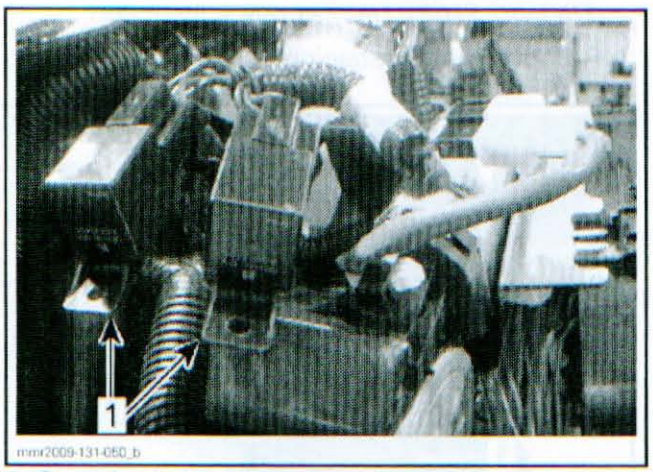

1. Forward and reverse relays

2. Set the FLUKE 115 DIGITAL MULTIMETER (P/N 529 035 868) to Ω.
3. Measure resistance as per the following table.

TEST PROBES	RESISTANCE
Terminal 30	Open (OL)
Terminal 87	

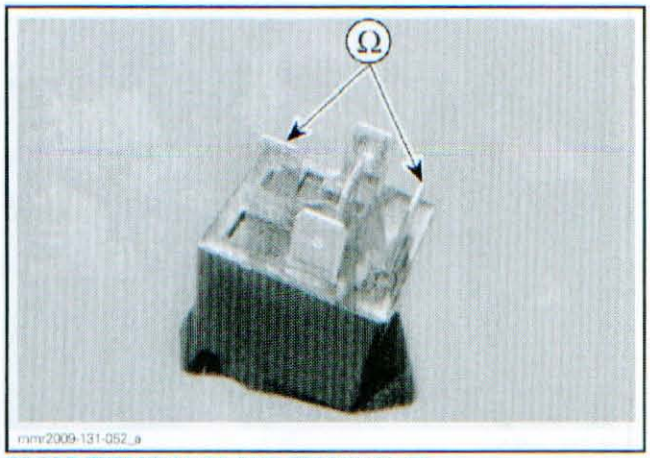

PROBE TERMINAL 30 AND TERMINAL 87

4. Measure resistance as per the following table.

TEST PROBES	RESISTANCE
Terminal 30	Close to 0 Ω
Terminal 87a	

5. Apply 12 volts on terminals 85 and 86.
6. Measure resistance again as per the following table.

TEST PROBES	RESISTANCE
Terminal 30	Close to 0 Ω
Terminal 87	

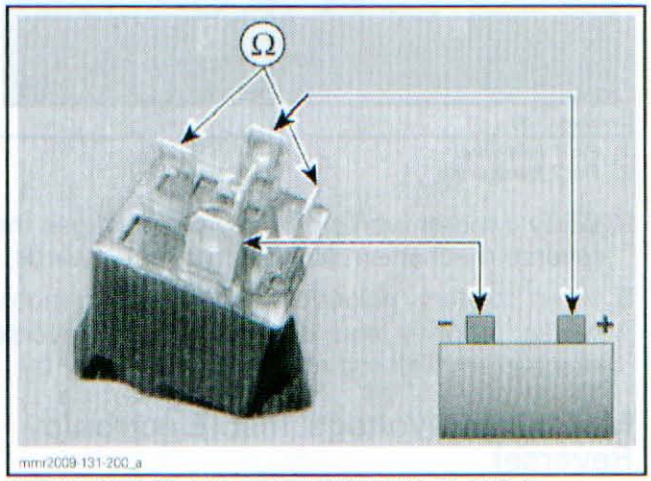

APPLY VOLTAGE AND PROBE TERMINAL 30 AND 87

7. Apply 12 volts on terminals 85 and 86.
8. Measure resistance again as per the following table.

TEST PROBES	RESISTANCE
Terminal 30	Open (OL)
Terminal 87a	

www.midwestmanuals.com

If results are not as per the above tables, replace relay.

Relay Input Voltage Test

1. Set the FLUKE 115 DIGITAL MULTIMETER (P/N 529 035 868) to Vdc.
2. Start engine.
3. Measure voltage as per the following tables.

FORWARD AND REVERSE RELAYS	
TEST PROBES	VOLTAGE
Pin 86 (RD)	Battery voltage (± 12 Vdc)
Battery negative (-) post	

FORWARD AND REVERSE RELAYS	
TEST PROBES	VOLTAGE
Pin 87 (RD)	Battery voltage (± 12 Vdc)
Battery negative (-) post	

If voltage is not as specified, repair open circuit in wiring. Refer to *WIRING DIAGRAM*.

Relay Ground Test (Motor Actuation)

1. Set the FLUKE 115 DIGITAL MULTIMETER (P/N 529 035 868) to Vdc.
2. Start engine.
3. Measure voltage as per the following table.

FORWARD AND REVERSE RELAYS	
TEST PROBES	VOLTAGE
Pin 87a (BK)	Battery voltage (± 12 Vdc)
Battery positive (+) post	

If voltage is not as specified, repair open circuit in wiring. Refer to *WIRING DIAGRAM*.

Relay Ground Signal Test

Forward Relay

NOTE: For this test, electronic reverse must be set in reverse position.

NOTE: The measured voltage will be transmitted during a short period of time.

1. Set the FLUKE 115 DIGITAL MULTIMETER (P/N 529 035 868) to Vdc.
2. Start engine and let it run at idle.
3. Press on START/RER button while measuring voltage as per the following table.

FORWARD RELAY	
TEST PROBES	VOLTAGE
Pin 85 (BE/YL)	Battery voltage (± 12 Vdc)
Battery positive (+) post	

If voltage is not as specified, repair open circuit in wiring. Refer to *WIRING DIAGRAM*.

Reverse Relay

NOTE: For this test, electronic reverse must be set in forward position.

NOTE: The measured voltage will be transmitted during a short period of time.

1. Set the FLUKE 115 DIGITAL MULTIMETER (P/N 529 035 868) to Vdc.
2. Start engine and let it run at idle.
3. Press on START/RER button while measuring voltage as per the following table.

REVERSE RELAY	
TEST PROBES	VOLTAGE
Pin 85 (BE/RD)	Battery voltage (± 12 Vdc)
Battery positive (+) post	

If voltage is not as specified, repair open circuit in wiring. Refer to *WIRING DIAGRAM*.

ECM Ground Continuity Test (Relay)

Forward Relay

1. Disconnect ECM connector A.
2. Install connector A on ECM ADAPTER TOOL (2 CONNECTORS) (P/N 420 277 010).
3. Set the FLUKE 115 DIGITAL MULTIMETER (P/N 529 035 868) to Ω.
4. Measure resistance as per the following table.

FORWARD RELAY	
TEST PROBES	RESISTANCE
ECM pin A-13	Close to 0 Ω
Relay pin 85 (BE/YL)	

Reverse Relay

1. Disconnect ECM connector B.
2. Install connector B on ECM ADAPTER TOOL (2 CONNECTORS) (P/N 420 277 010).
3. Set the FLUKE 115 DIGITAL MULTIMETER (P/N 529 035 868) to Ω.
4. Measure resistance as per the following table.

www.midwestmanuals.com

REVERSE RELAY	
TEST PROBES	RESISTANCE
ECM pin B-33	Close to 0 Ω
Relay pin 85 (BE/RD)	

REVERSE POSITION SWITCH (ELECTRONIC REVERSE)

RVPS Switch Continuity Test

1. Disconnect RVPS switch connector.

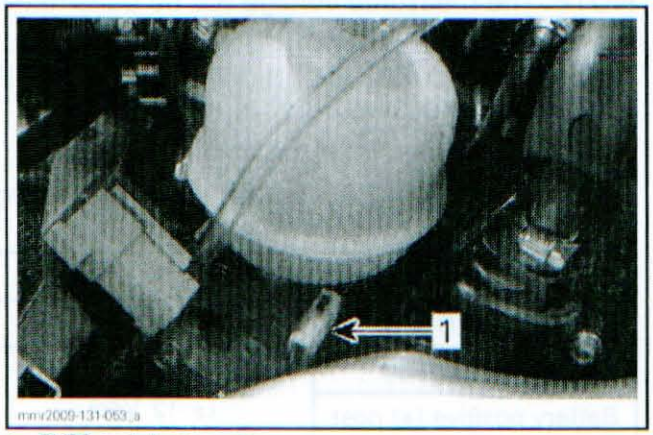

1. RVPS switch connector

2. Set the FLUKE 115 DIGITAL MULTIMETER (P/N 529 035 868) to Ω.
3. Release RVPS switch.
4. Measure resistance as per the following table.

TEST PROBES	RESISTANCE
Pin 1	Open (OL)
Pin 2	

5. Press RVPS switch.
6. Measure resistance again as per the following table.

TEST PROBES	RESISTANCE
Pin 1	Close to 0 Ω
Pin 2	

If results are not as per the above tables, replace RVPS switch.

RVPS Switch Removal

1. Remove electronic shift unit. Refer to *ELECTRONIC SHIFT UNIT* in this subsection.
2. Remove RVPS switch lock nut.

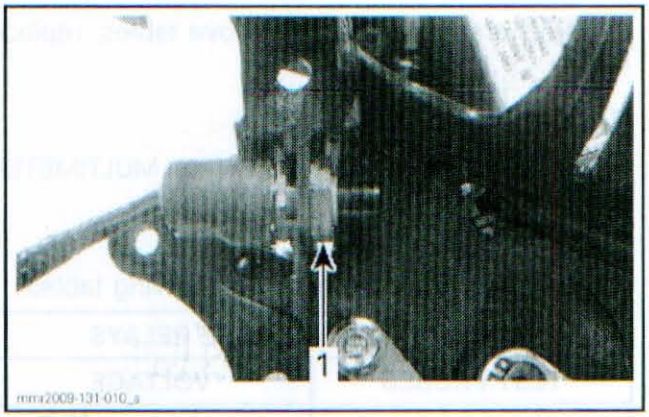

1. RVPS switch lock nut

3. Remove RVPS switch from unit.

RVPS Switch Installation

1. Remove lock nut from threaded shaft.
2. Screw adjusting nut completely onto threaded shaft.

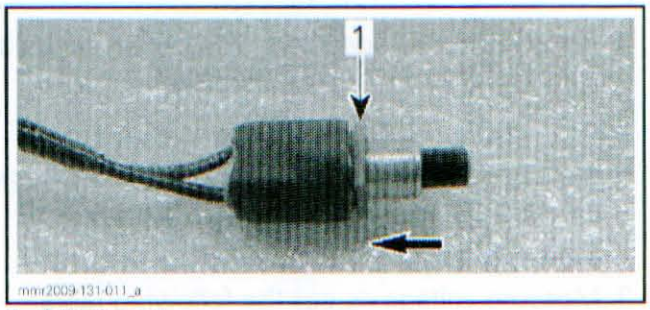

1. Adjusting nut

3. Install RVPS switch into electronic shift unit hole.
4. Torque RVPS switch lock nut to 1.8 N•m (16 lbf•**in**).

CHAINCASE

Chaincase Cover Removal

1. Apply parking brake.
2. Remove muffler. Refer to *EXHAUST SYSTEM* subsection.
3. Remove battery and battery rack. Refer to *CHARGING SYSTEM* subsection.
4. Remove shift lever (mechanical reverse) or electronic shift unit depending on the type of vehicle. See procedure in this subsection.
5. Disconnect the speed sensor connector.

www.midwestmanuals.com

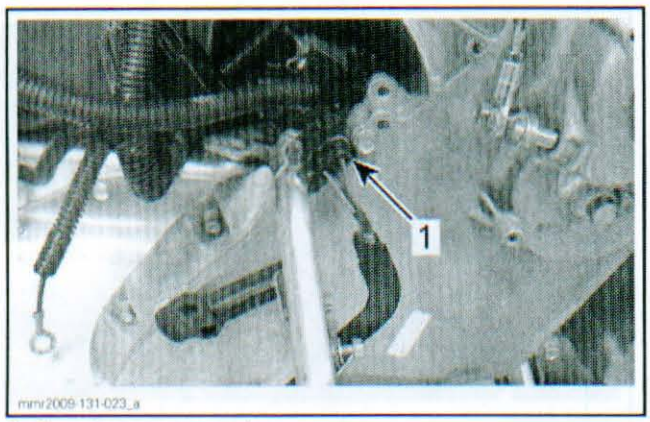

1. Speed sensor connector

6. Remove reverse gear retaining screw.

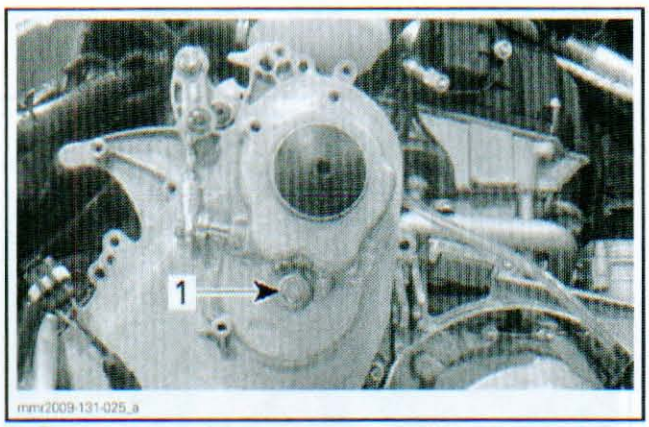

1. Reverse gear retaining screw

7. Remove lower retaining screw from shifter link rod.

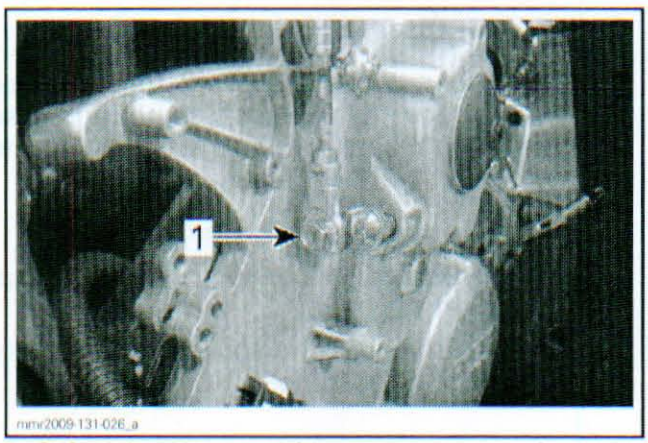

1. Shifter link rod lower retaining screw

8. Remove RH side panel strap from frame.

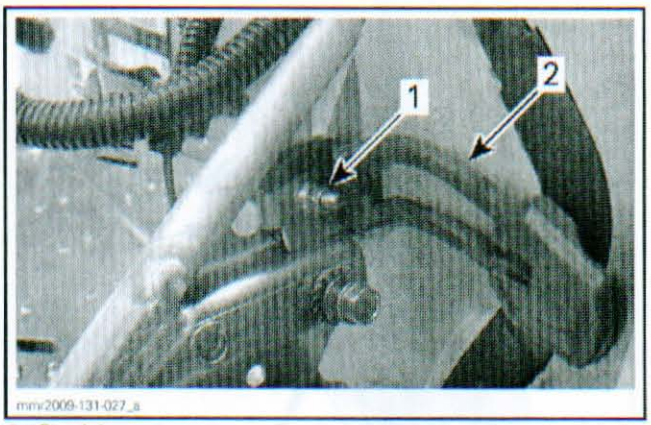

1. Retaining nut
2. Side panel strap

9. Place a container under vehicle in line with chaincase to catch chaincase oil.
10. Unscrew and remove chaincase cover screws.

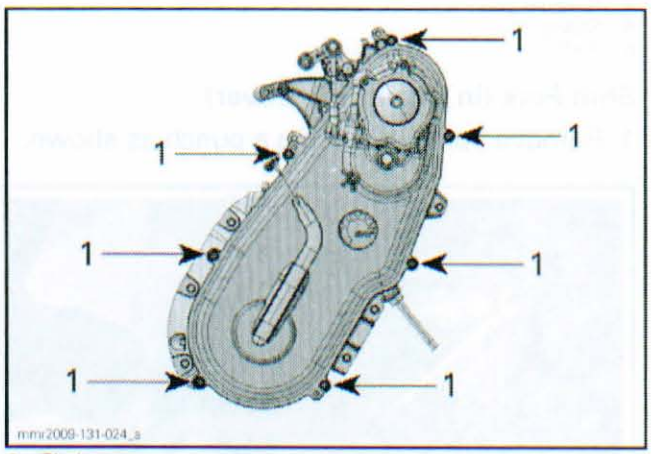

1. Chaincase cover screws

11. Pull the bottom of chaincase cover to drain oil.
12. Wait a moment then remove the cover completely.

Chaincase Disassembly

1. Apply parking brake.
2. Remove chaincase cover. Refer to *CHAINCASE COVER REMOVAL* in this subsection.

www.midwestmanuals.com

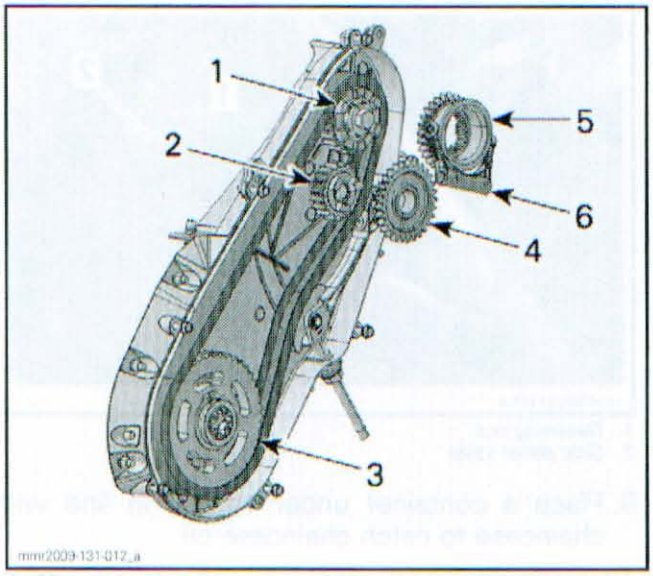

1. *Upper sprocket*
2. *Reverse sprocket*
3. *Lower sprocket*
4. *Reverse gear*
5. *Sliding gear*
6. *Shift fork*

Shift Fork (in Chaincase Cover)

1. Remove spring pin using a punch as shown.

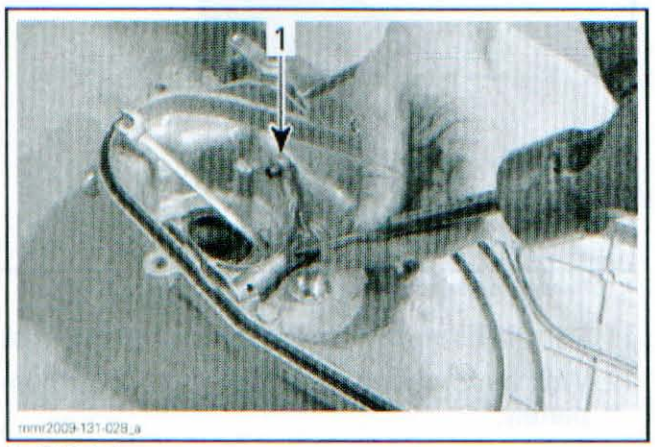

1. *Shift fork*

2. Pull out shift rod from chaincase cover.
3. Remove shift fork.

Gears and Sprockets

NOTE: Do not remove tension on drive chain for the moment.

1. Remove upper screw and washer that hold sliding gear assembly.

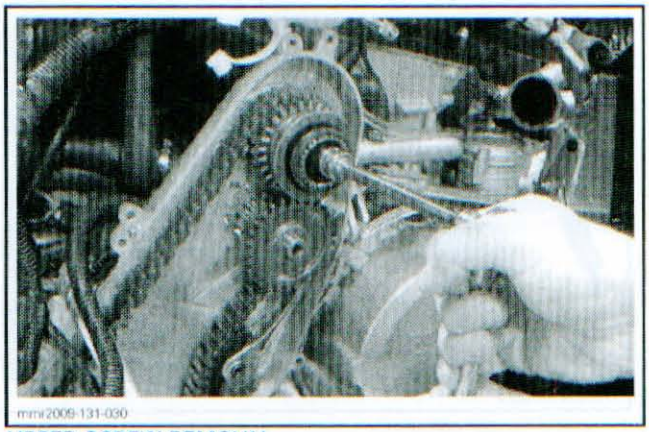

UPPER SCREW REMOVAL

2. Remove chain tensioner from chaincase.
3. Remove sliding gear assembly, reverse sprocket and reverse gear simultaneously.

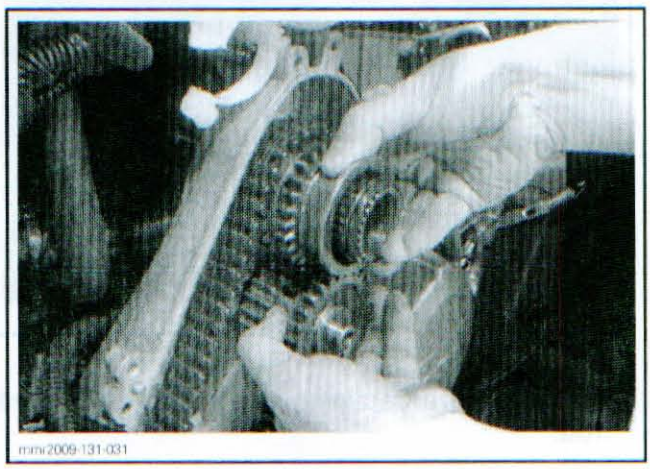

Sliding Gear Disassembly

NOTICE Do not use the press to compress the sliding gear while disassembling. Use the press ONLY as a guide to ensure that the spring tension will be released safely.

1. Install sliding gear assembly on a press.
2. Position a 25 mm (1 in) deep socket on the upper sprocket side.
3. Adjust press rod on the socket, do not apply pressure on the assembly.

www.midwestmanuals.com

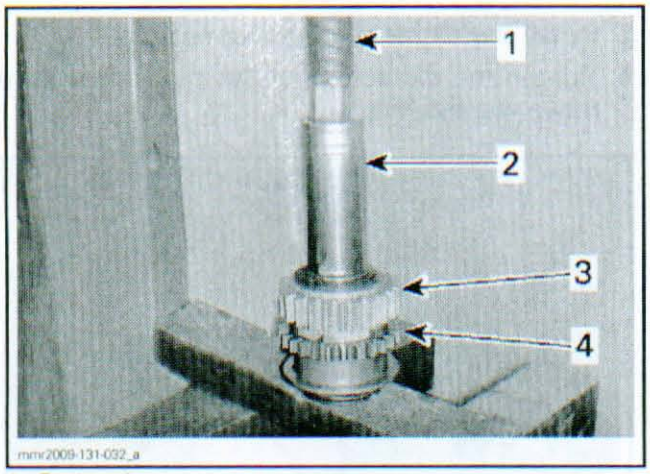

1. *Press rod*
2. *Deep socket (1 in)*
3. *Upper sprocket*
4. *Sliding gear*

4. Firmly retain upper sprocket with one hand.
5. Remove circlip from coupling shaft.

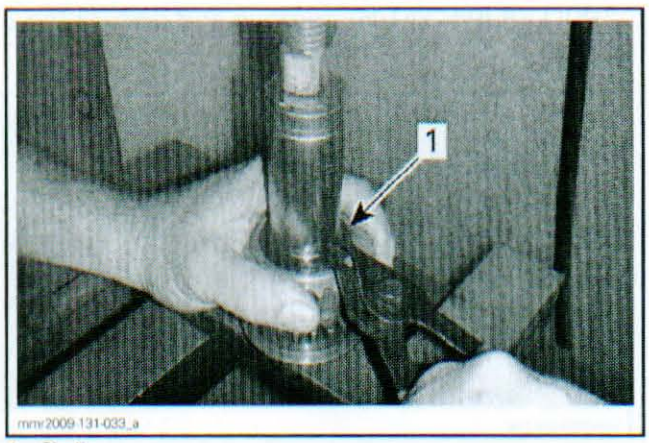

1. *Circlip*

6. Carefully release spring tension.

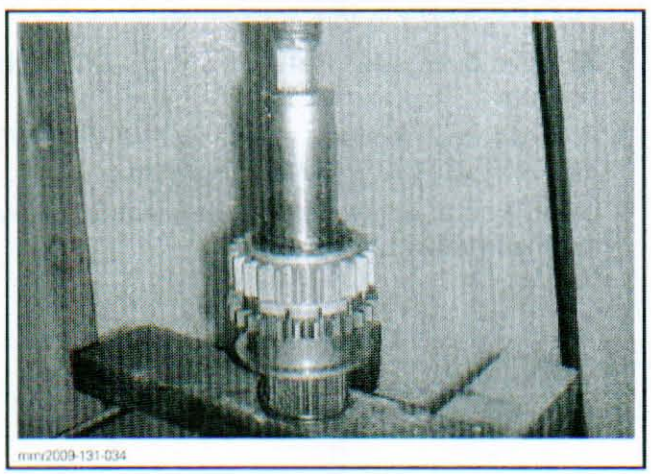

7. Remove upper sprocket and sliding gear from press.

Chain and Lower Sprocket

1. Remove the lower sprocket circlip.

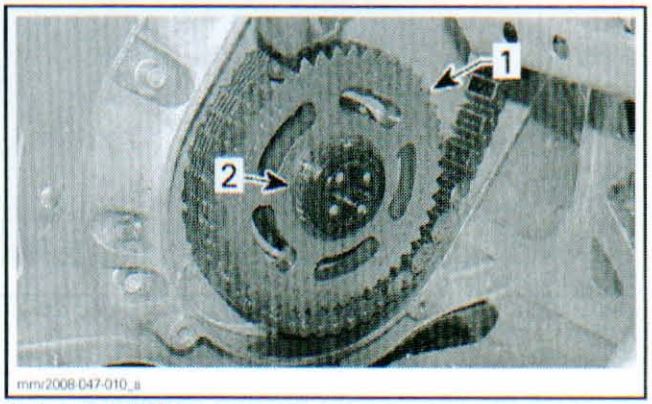

1. *Lower sprocket*
2. *Circlip*

2. Remove lower sprocket and drive chain simultaneously.

Chain Tensioner

1. Unscrew lock nut from tensioner adjustment screw.
2. Remove tensioner adjustment screw from tensioner arm.
3. Remove tensioner arm from chaincase.

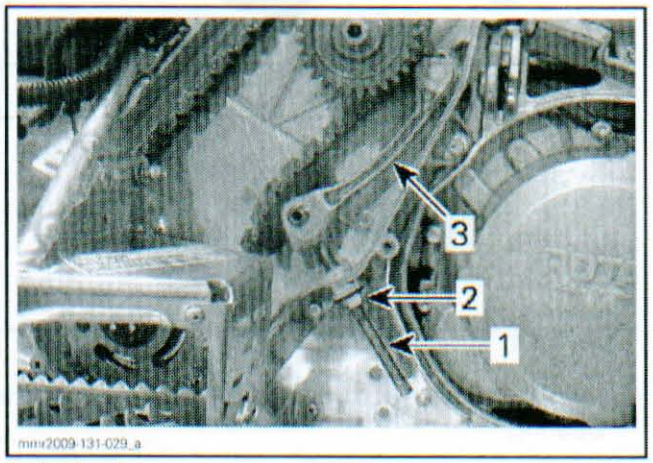

1. *Lock nut*
2. *Tensioner adjustment screw*
3. *Tensioner arm*

Chaincase Bearings

NOTE: This procedure can be applied either for the countershaft bearing or the drive shaft bearing.

1. Remove the countershaft or the drive axle, depending which bearing is replaced. Refer to appropriate section, *DRIVEN PULLEY AND COUNTERSHAFT* or *DRIVE AXLE*.
2. Remove the snap ring securing bearing into chaincase.

www.midwestmanuals.com

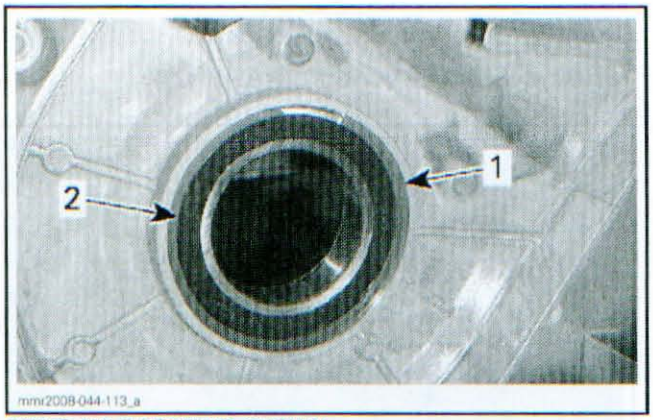

DRIVE AXLE BEARING SHOWN
1. *Snap ring*
2. *Bearing*

3. Install the appropriate bearing extractor:

BEARING	TOOL
Countershaft	BEARING PULLER/PUSHER (P/N 529 036 111)
Drive axle	BEARING PULLER/PUSHER (P/N 529 036 112)

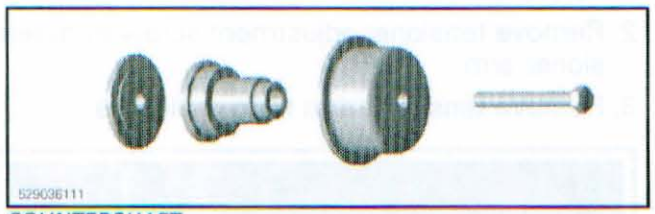

COUNTERSHAFT

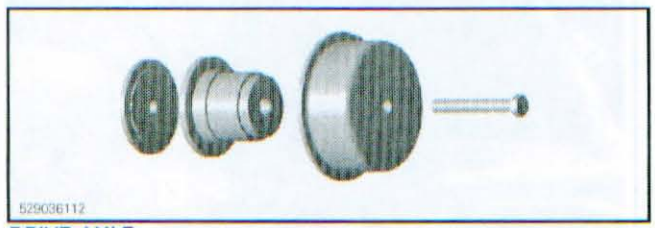

DRIVE AXLE

4. Install the extractor/installer tool behind the bearing.

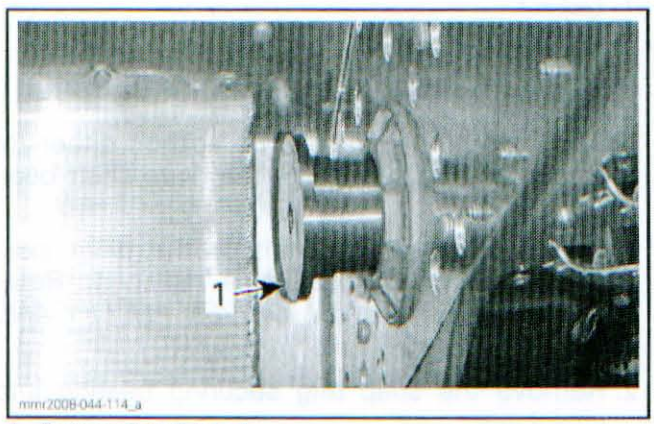

1. *Extractor/installer tool*

5. Install the extractor cup over bearing.
6. Tighten the extractor/installer tool screw to remove the bearing.

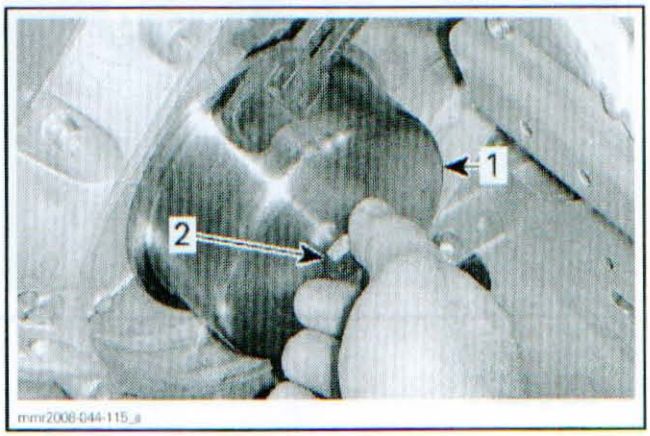

1. *Extractor cup*
2. *Tighten to remove bearing*

7. Using a seal puller such as the SNAP-ON SEAL PULLER (P/N YA105), remove and discard the oil seal.

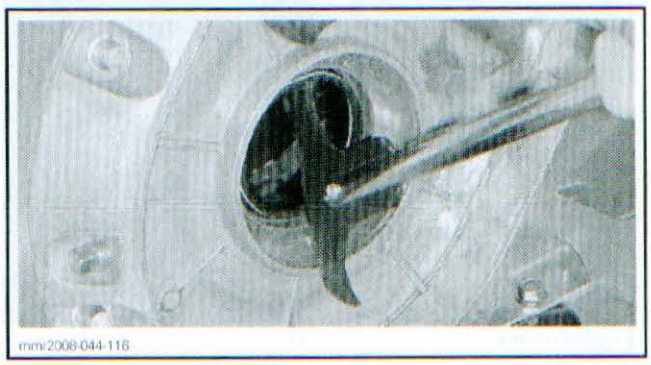

Chaincase Removal

1. Disassemble chaincase. Refer to *CHAINCASE DISASSEMBLY* in this subsection.
2. Remove drive axle. Refer to *DRIVE AXLE* subsection.
3. Remove countershaft. Refer to *DRIVEN PULLEY AND COUNTERSHAFT* subsection.
4. Using a small angle grinder, remove the following rivet heads.

www.midwestmanuals.com

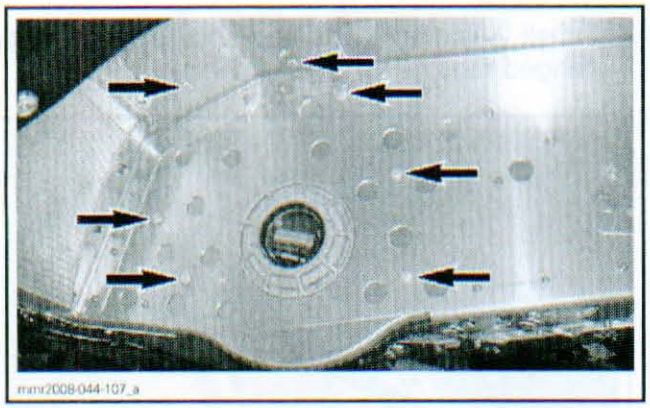

5. Using a 1/4 in drill bit, remove rivet located on right side of chaincase.

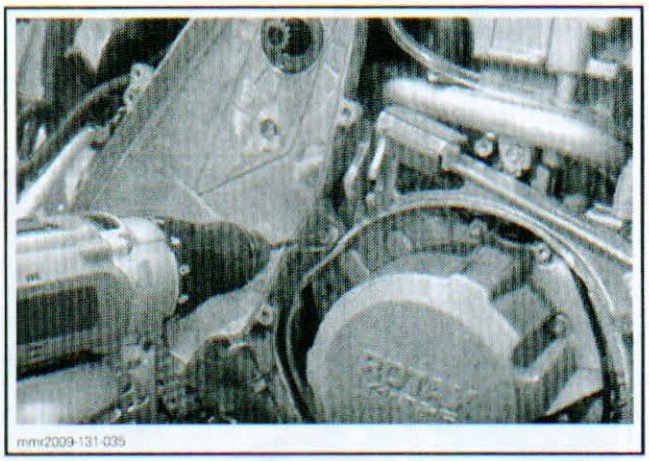

6. Unscrew bolt behind the top of chaincase.

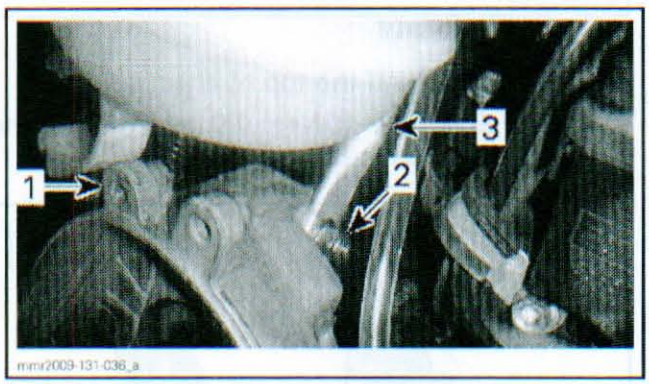

1. Chaincase
2. Retaining bolt
3. RH side frame member

7. Using 2 large pry bars inserted between chaincase and frame, pry chaincase out of vehicle.

Chaincase Inspection

Chaincase Cover

Inspect cover for cracks or other damages, replace if necessary.

Inspect cover front and rear stopper for crack, replace if necessary.

Inspect O-ring inside cover is brittle, hard or damaged, replace if necessary.

Shift Fork, Lever and Link Rod

Inspect shift fork for straightness, replace if necessary.

Inspect shift fork wear or other damages, replace if necessary.

Inspect shift lever for straightness and for rotation movement, replace if necessary.

Inspect link rod for straightness and other damages, replace if necessary.

Spring

Measure spring free length, replace if out of specification.

SPRING FREE LENGTH	
SERVICE LIMIT	48 mm ± 1 mm (1.89 in ± .039 in)

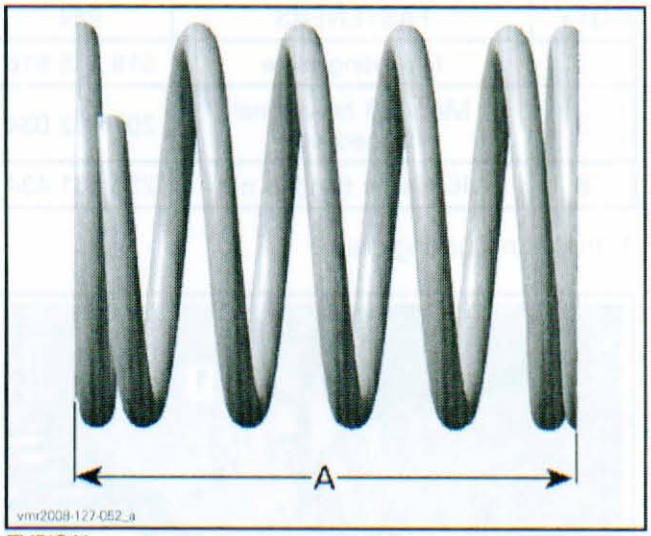

TYPICAL
A. Free length

Chain, Gears and Sprockets

Inspect the chain, gears and sprockets for:
- Wear
- Cracks
- Damages teeth
- Missing links.

If a problem is detected:
- Replace drive chain and sprockets as an assembly.

www.midwestmanuals.com

- Replace upper sprocket and sliding gear as an assembly.
- Replace reverse sprocket and reverse gear as an assembly.

Chain Tensioner

Inspect chain tensioner sliders for wear or other damages, replace if necessary.

Inspect threads of tensioner adjustment screw for damages or wear, replace if necessary.

Inspect rubber washer condition, replace if necessary.

Bearings

Inspect all bearings for smooth operation:

- If rough or excessive play is detected, replace bearing.

Chaincase Installation

To install the chaincase, have the following parts in hands:

PARTS TO INSTALL CHAINCASE		
QTY	FASTENERS	P/N
1	Mounting plate	518 325 816
3	M6 x 20 hexagonal flanged bolt	207 662 034
8	M6 elastic flanged nut	233 261 434

1. Install mounting plate.

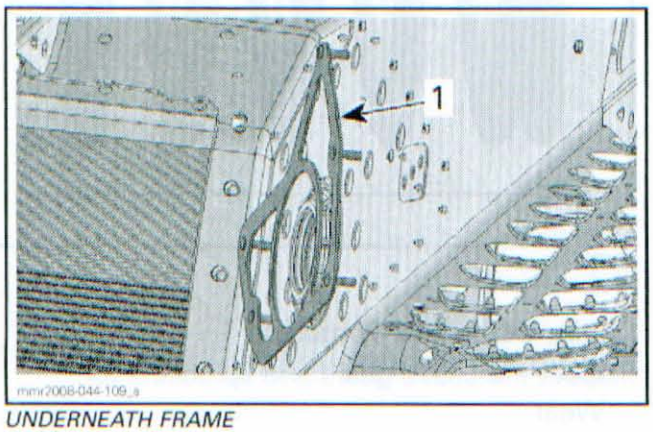

UNDERNEATH FRAME
1. Mounting plate

2. Install chaincase.
3. Install 5 elastic flanged nuts to secure chaincase.

NOTE: Unless otherwise noted, bolts and nuts holding the chaincase must be installed loosely FIRST.

4. Install 2 flanged bolts and secure with elastic flanged nuts.

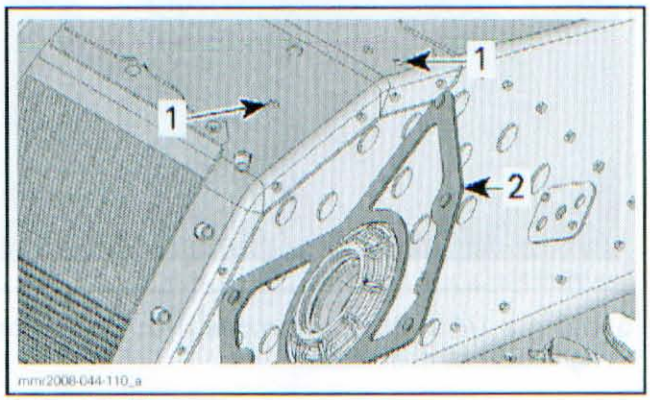

1. Install bolt here
2. Mounting plate

5. Install a flange bolt to secure chaincase to RH side member.

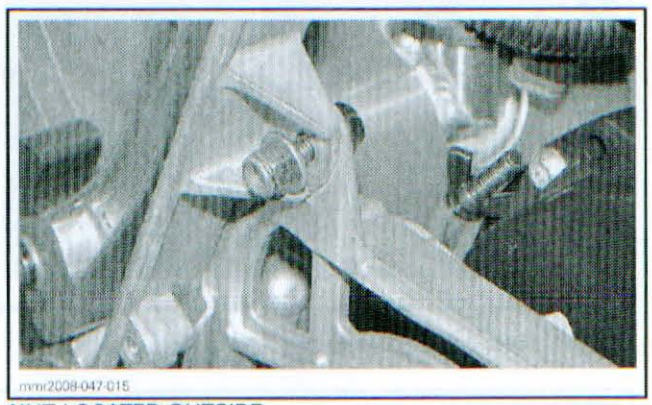

NUT LOCATED OUTSIDE

6. Install bolt behind the top of chaincase.
7. Torque all nuts to 10 N•m (89 lbf•**in**) using the following sequence.

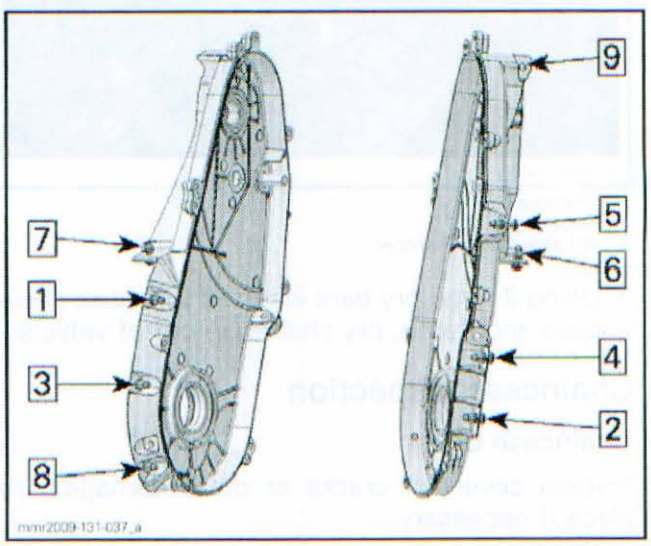

www.midwestmanuals.com

8. Install countershaft. Refer to *DRIVEN PULLEY AND COUNTERSHAFT* subsection.
9. Install drive axle. Refer to *DRIVE AXLE* subsection.
10. Assemble chaincase. Refer to *CHAINCASE ASSEMBLY* in this subsection.

Chaincase Assembly

Chaincase Bearings

NOTE: This procedure can be applied either for the countershaft bearing or the drive shaft bearing.

1. Install the **NEW** oil seal on the extractor/installer tool. Position the lips toward bearing.

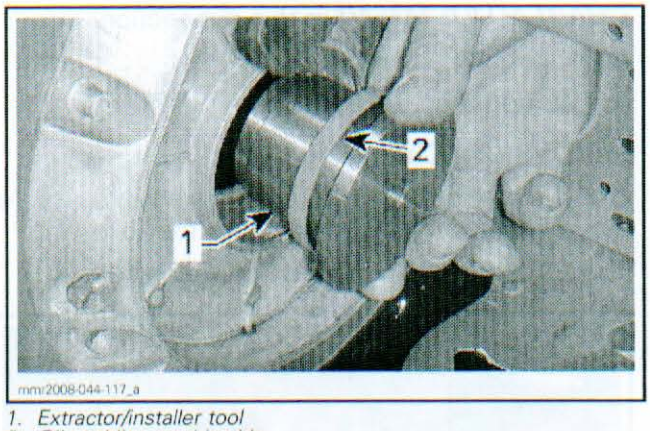

1. Extractor/installer tool
2. Oil seal lips on this side

2. Install extractor cup inside frame.

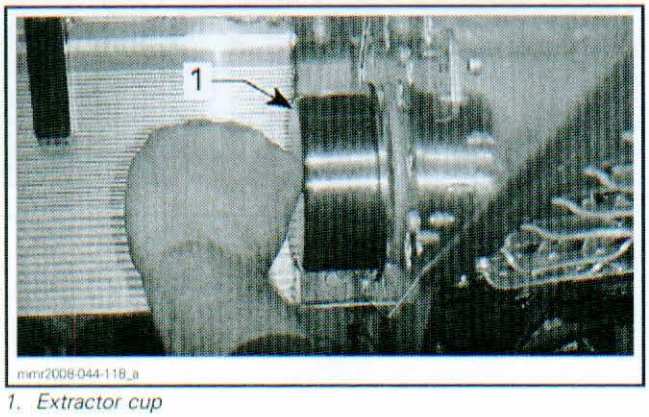

1. Extractor cup

3. Tighten extractor/installer tool screw to install the oil seal.
4. Install large washer and extractor/installer tool screw inside frame.

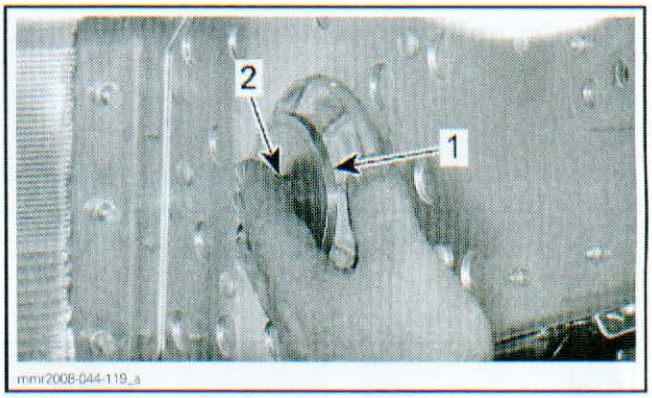

1. Large washer
2. Extractor/installer tool screw

5. In chaincase, install **NEW** bearing and extractor/installer tool.

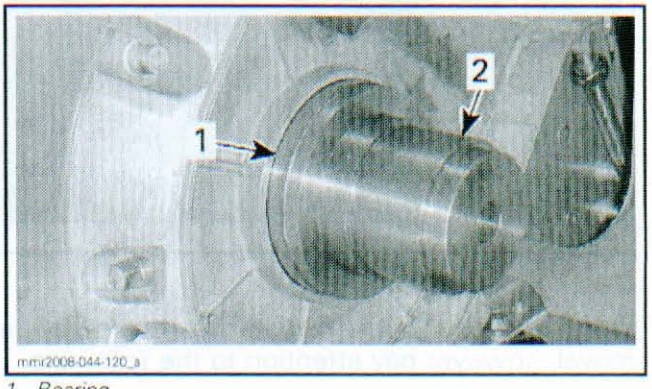

1. Bearing
2. Extractor/installer tool

6. Tighten extractor/installer tool screw to install the bearing.
7. Remove tool.

Chain Tensioner

The installation procedure is the reverse of removal.

Chain and Lower Sprocket

The installation procedure is the reverse of removal, however pay attention to the following.

Install sprocket with its inscription outward.

Sliding Gear

NOTICE **Do not use the press to compress the sliding gear while assembling. Use the press ONLY as a guide to ensure that the spring tension will be applied safely.**

The installation procedure is the reverse of removal, however pay attention to the following.

Install coupling shaft circlip on the splines side.

Install upper sprocket circlip on a press.

www.midwestmanuals.com

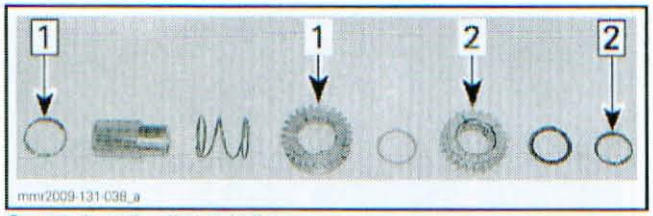

Step 1: Install splines circlip
Step 2: Install upper sprocket circlip on a press

1. *Sliding gear*
2. *Upper sprocket*

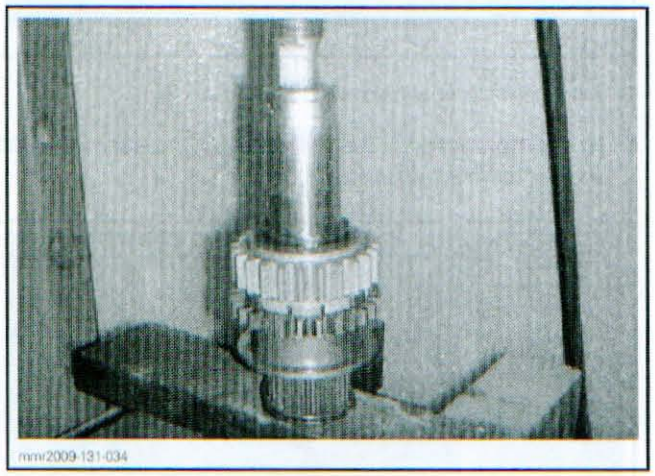

Gears and Sprockets

The installation procedure is the reverse of removal, however pay attention to the following.

Assemble reverse sprocket and reverse gear as per the following illustration.

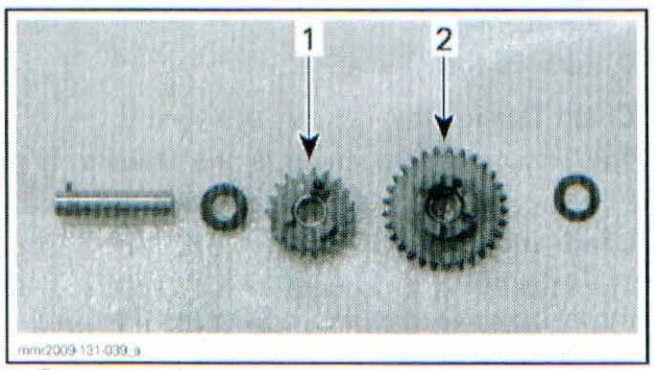

1. *Reverse sprocket*
2. *Reverse gear*

Install sliding gear assembly, reverse sprocket and reverse gear simultaneously.

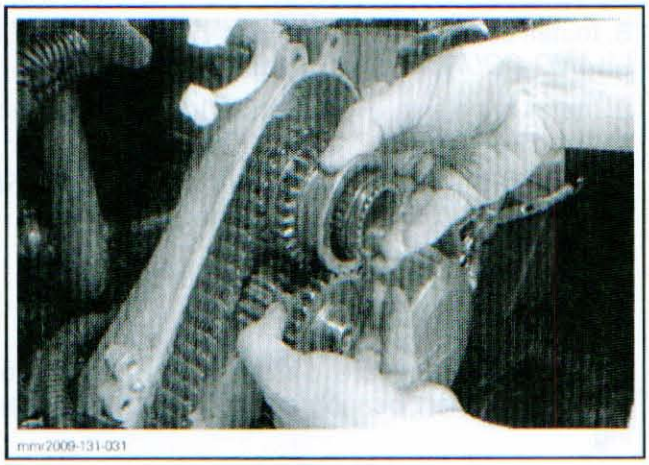

Install upper screw and washer that hold sliding gear assembly. (do not tighten for the moment).

Adjust tension on the drive chain. Refer to *DRIVE CHAIN ADJUSTMENT* in this subsection.

Apply parking brake.

Torque upper screw to 48 N•m (35 lbf•ft).

Shift Fork (in Chaincase Cover)

The installation procedure is the reverse of removal, however pay attention to the following.

Position shift fork lever toward the inside.

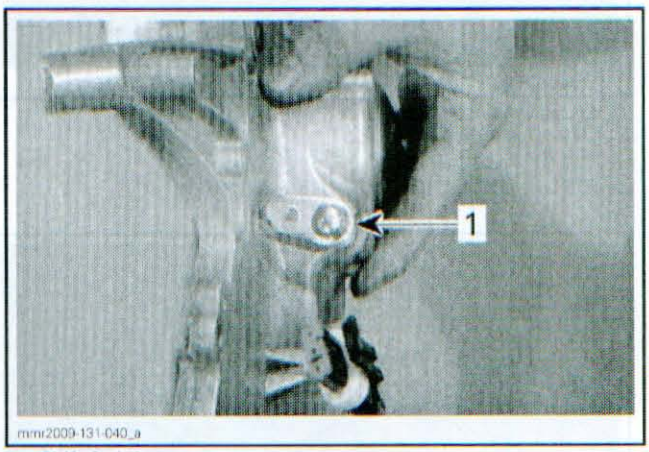

1. *Shift fork lever*

Install spring pin into the large hole.

www.midwestmanuals.com

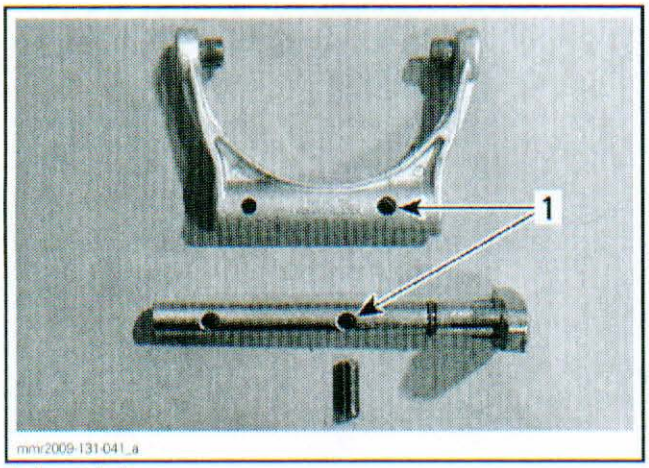

1. Large hole

Ensure that seal is properly seated on the chaincase cover.

Chaincase Cover

Install chaincase cover. Refer to *CHAINCASE COVER* in this subsection.

Chaincase Cover Installation

The installation procedure is the reverse of removal, however pay attention to the following.

Ensure cover O-ring is positioned correctly in its groove.

Ensure that link rod is positioned with the double reference marks upwards.

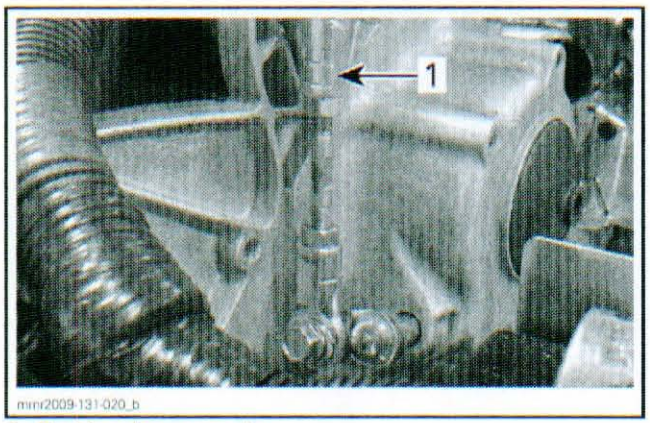

1. Double reference marks

Torque chaincase cover screws in accordance with the following sequence.

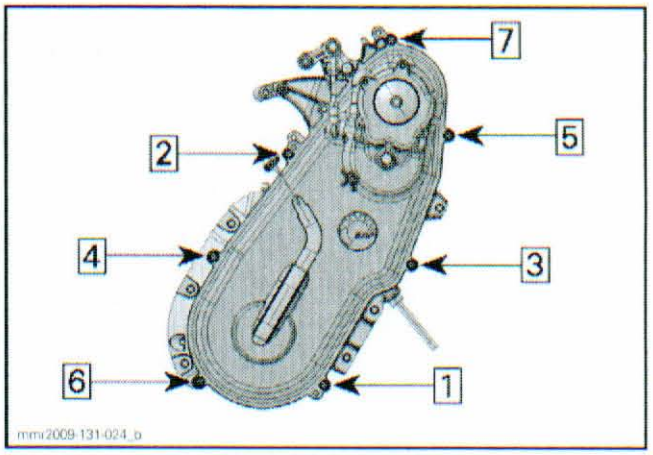

CHAINCASE COVER SCREWS TORQUE	
SAME CHAINCASE	10 N•m (89 lbf•**in**)
NEW CHAINCASE	15 N•m (133 lbf•**in**)

Torque reverse gear retaining screw to 15 N•m (133 lbf•**in**).

Install the shift lever (mechanical reverse) or electronic shift unit depending on the type of vehicle. See procedure in this subsection.

Adjust shift linkage, refer to *SHIFT LINKAGE (MECHANICAL AND ELECTRONIC REVERSE)* in this subsection.

Install battery and battery rack. Refer to *CHARGING SYSTEM* subsection.

Install muffler. Refer to *EXHAUST SYSTEM* subsection.

Refill chaincase. Refer to *CHAINCASE OIL* in this subsection.

www.midwestmanuals.com

www.midwestmanuals.com

DRIVE AXLE

SERVICE TOOLS – OTHER SUPPLIER

Description	Part Number	Page
SNAP-ON 3-JAW PULLER	cg273	374

SERVICE PRODUCTS

Description	Part Number	Page
THERMO LUBE SYNTHETIC GREASE	219 700 417	375

www.midwestmanuals.com

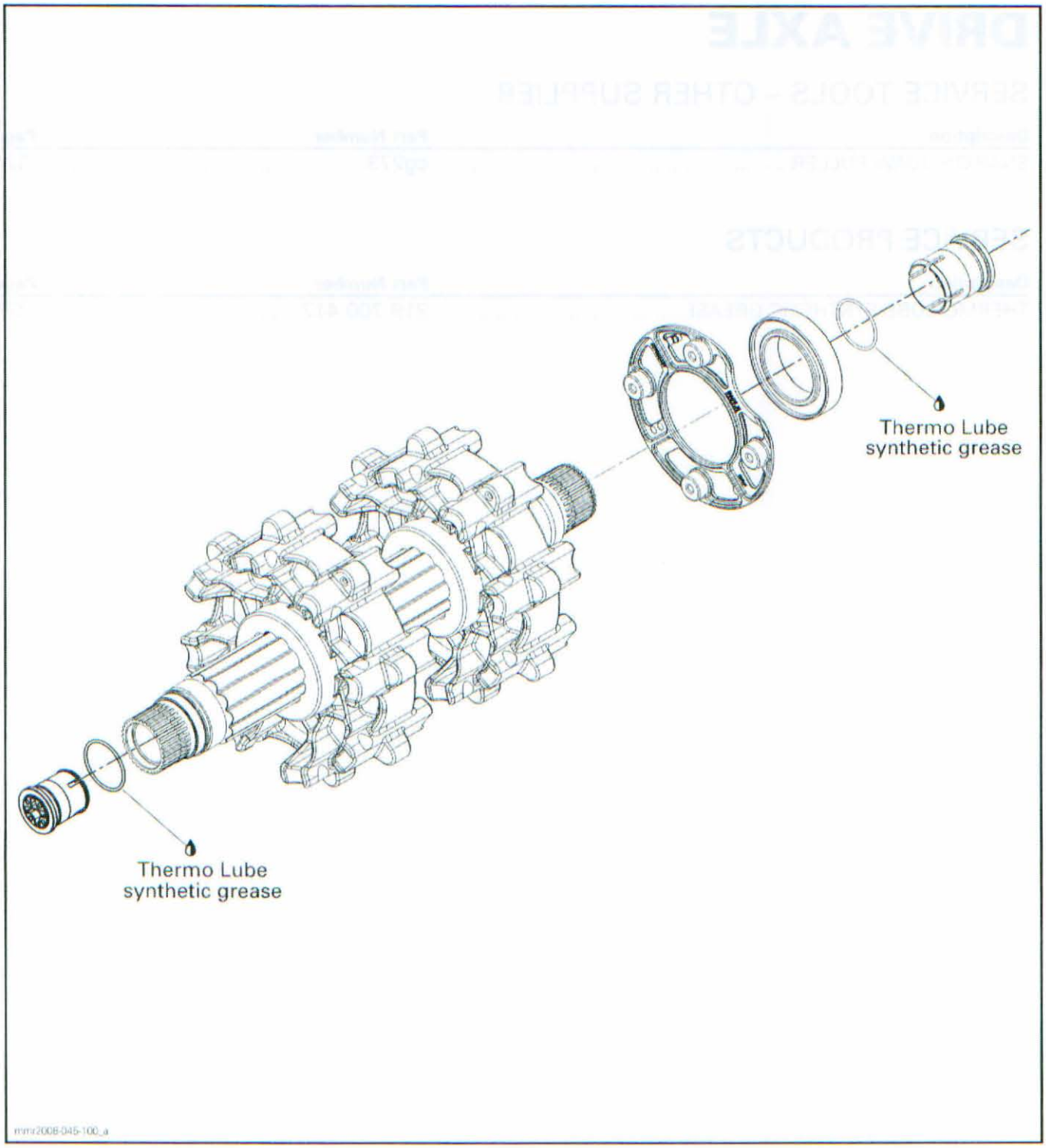

www.midwestmanuals.com

GENERAL

During assembly/installation, use torque values and service products as in the exploded view.

Clean threads before applying a threadlocker. Refer to *SELF-LOCKING FASTENERS* and *LOCTITE APPLICATION* at the beginning of this manual for complete procedure.

⚠ WARNING

Torque wrench tightening specifications must be strictly adhered to.
Locking devices (e.g.: locking tabs, elastic stop nuts, cotter pins, etc.) must be replaced with new ones.

PROCEDURES

DRIVE AXLE

Drive Axle Removal

1. Remove the rear suspension. Refer to *REAR SUSPENSION* subsection.
2. Remove the brake caliper. Refer to *BRAKE* subsection.
3. Remove the chaincase cover. Refer to *CHAINCASE AND REVERSE* subsection.
4. Release tension from drive chain by unscrewing the tensioner adjustment screw.

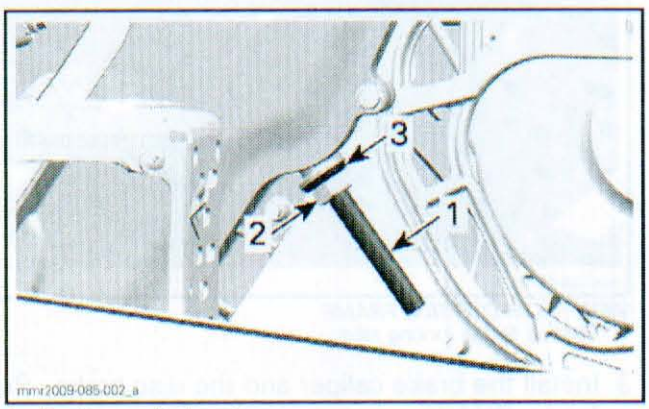

1. *Tensioner adjustment screw*
2. *Lock nut*
3. *Washer with rubber surface*

5. Remove the lower sprocket circlip.

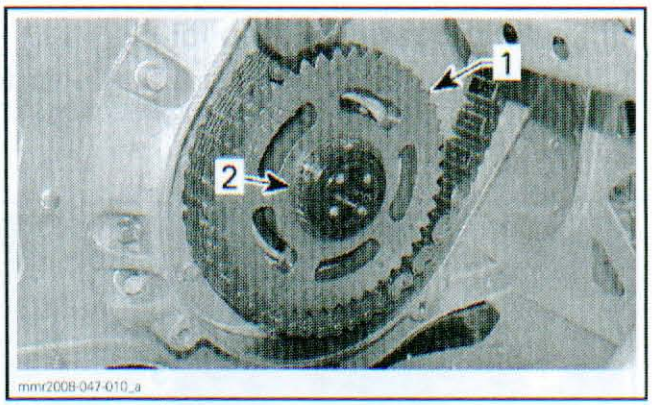

1. *Lower sprocket*
2. *Circlip*

6. Remove lower sprocket.
7. From underneath of vehicle, turn the LH bearing flange counterclockwise to unlock it from frame.

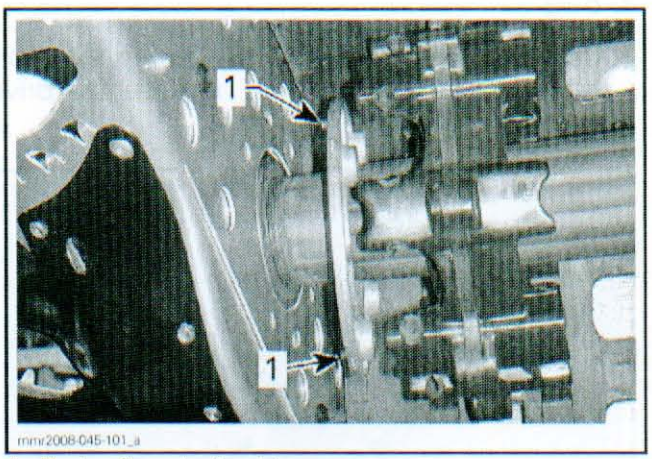

1. *Bearing flange locking tabs*

8. Release drive axle sprockets from track and at the same time, push the drive axle toward the LEFT side.
9. Move the drive axle towards the right side to remove it from vehicle.

Drive Axle Inspection

Check if bearing turns smoothly and freely. Replace if necessary.

Check if bearing seals are not damaged. Replace if necessary.

Check if the bearing flange is cracked, bent or otherwise damaged. Replace if necessary.

Replace drive axle if one of the following situations is detected:

- Cracked, worn or damaged drive axle
- Worn or damaged drive axle splines
- Worn or damaged sprockets
- Worn bearing journal.

www.midwestmanuals.com

Drive Axle Bearing Removal

1. Remove drive axle from vehicle. Refer to *DRIVE AXLE REMOVAL* in this subsection.
2. Remove the O-ring.

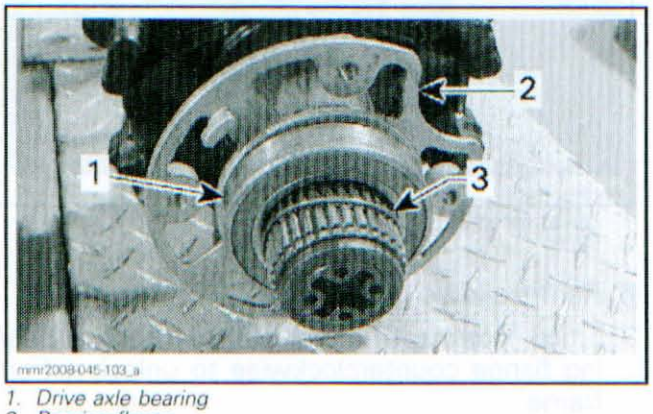

1. Drive axle bearing
2. Bearing flange
3. O-ring

3. Using a 3 legs jaw puller such as the SNAP-ON 3-JAW PULLER (P/N CG273), remove the drive axle bearing.

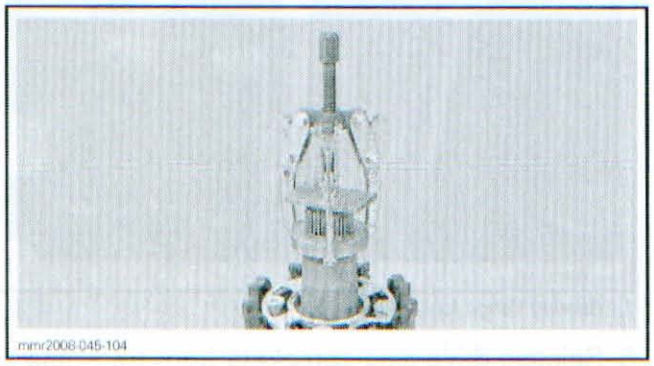

4. Remove the bearing flange.

Drive Axle Bearing Installation

1. Install bearing flange on drive axle.

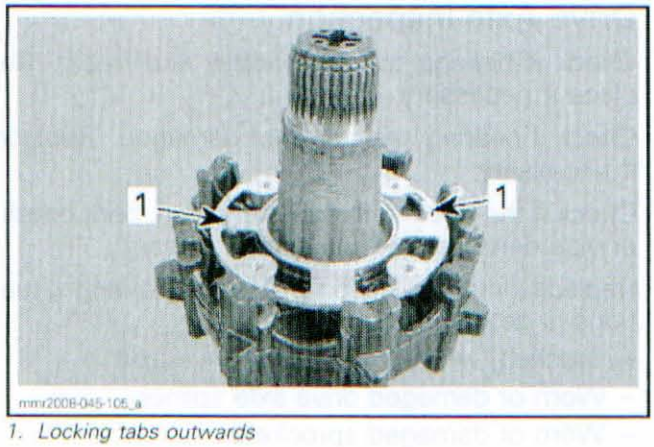

1. Locking tabs outwards

2. Using a press and a suitable pipe, push the bearing.

NOTICE **Always push the bearing by inner race.**

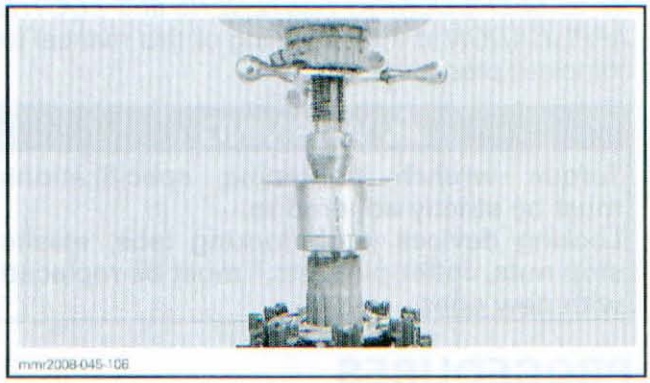

Drive Axle Installation

The installation is the reverse of the removal procedure. However, pay attention to the following.

1. Install drive axle then lock the bearing flange on frame.
2. Ensure bearing flange is properly locked.

NOTICE **Locking tabs must be properly inserted into frame.**

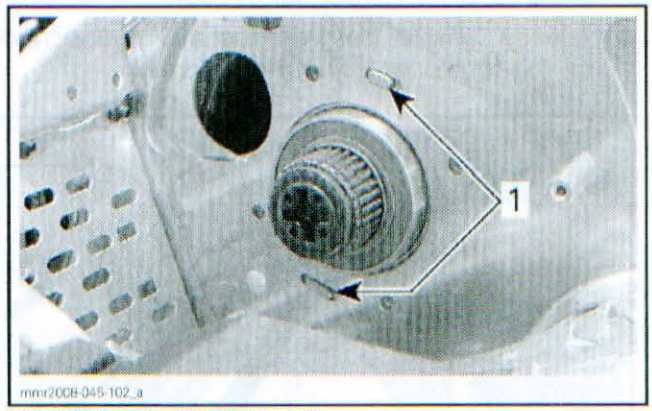

VIEW FROM OUTSIDE FRAME
1. Bearing flange locking tabs

3. Install the brake caliper and the disc brake. Refer to *BRAKE* subsection.
4. Install all other removed parts. Refer to the appropriate subsections.

MAGNETIC CAPS

Magnetic Cap Removal

1. For the RH cap, remove brake disc protective cover. Refer to *BRAKE* subsection.

www.midwestmanuals.com

2. For the LH cap, remove the chaincase cover. Refer to *CHAINCASE AND REVERSE* subsection.
3. Using 2 screwdrivers or pliers, pry or pull the magnetic cap out of drive axle end.
4. Discard the magnetic cap.

Magnetic Cap Installation

1. Apply THERMO LUBE SYNTHETIC GREASE (P/N 219 700 417) on O-ring.
2. Insert the magnetic cap into drive axle.
3. Install all other removed parts.

www.midwestmanuals.com

www.midwestmanuals.com

TRACK

SERVICE TOOLS

Description	Part Number	Page
TENSIOMETER	414 348 200	378
TRACK CLEAT INSTALLER	529 036 044	377

PROCEDURES

TRACK

Track Inspection

1. Visually inspect track for:
   - Cuts and abnormal wear
   - Broken rods
   - Broken or missing track cleats
   - Perforations in the track
   - Tears in the track (particularly around traction product holes)
   - Lugs that are broken or torn off, exposing portion of rods
   - Delamination of the rubber
   - Broken studs
   - Bent studs
   - Studs that are torn off the track
   - Missing track guide(s).

If track is damaged or rods are broken, replace track.

For damaged or missing cleats, replace by new ones.

⚠ WARNING

Do not operate a snowmobile with a cut, torn or damaged track.

Track Cleat Replacement

1. Raise rear of vehicle off the ground.
2. Lift snow guard.
3. Rotate track to expose a cleat to be replaced.
4. Remove cleat from track using plastic hammer and a big screwdriver.

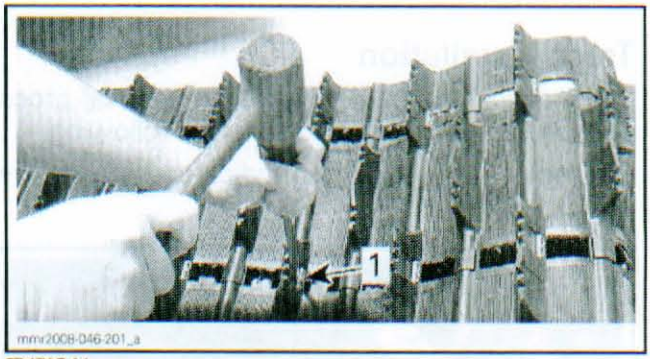

TYPICAL
1. Cleat

5. Place new cleat in position on the track.
6. Secure cleat using the TRACK CLEAT INSTALLER (P/N 529 036 044).

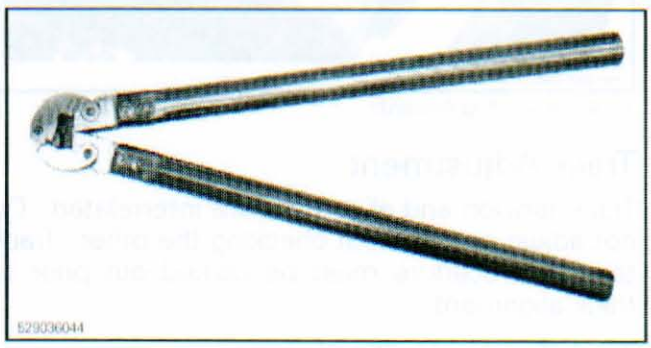

7. Bend cleat and push tabs into rubber.

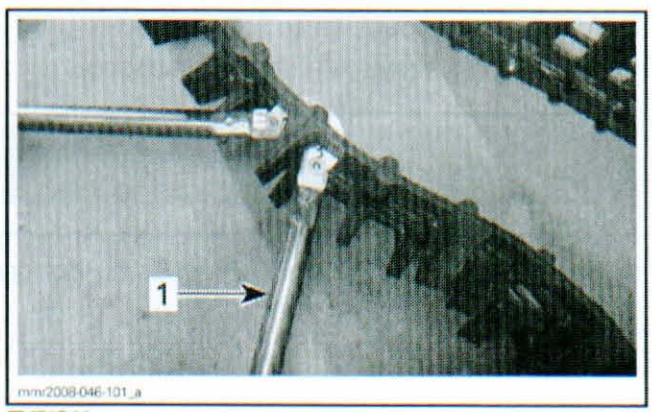

TYPICAL
1. Narrow-cleat installer

8. Reopen narrow-cleat installer.
9. Position cleat tabs on open end of tool.

www.midwestmanuals.com

10. Squeeze tabs until they are indented in rubber.

Track Removal

1. Remove rear suspension from vehicle. Refer to *REAR SUSPENSION* subsection.
2. Remove drive axle from vehicle. Refer to *DRIVE AXLE* subsection.
3. Remove track.

Track Installation

The installation is the reverse of removal procedure, however pay attention to the following.

Respect rotation direction indicated by an arrow on track thread.

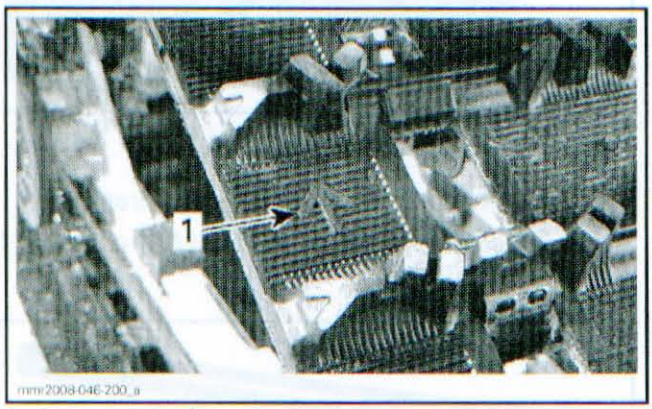

1. Arrow pointing forwards

Track Adjustment

Track tension and alignment are interrelated. Do not adjust one without checking the other. Track tension procedure must be carried out prior to track alignment.

Track Tension Verification

1. Lift rear of vehicle and support it off the ground.
2. Allow rear suspension to fully extend.
3. Use the TENSIOMETER (P/N 414 348 200).



4. Set deflection to 3.2 cm (1.26 in) using bottom O-ring.

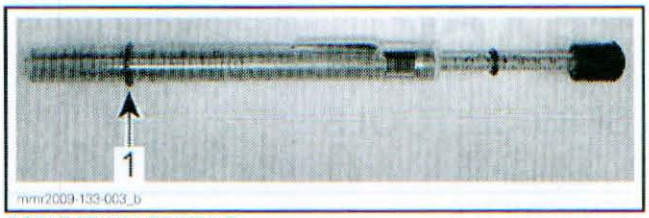

DEFLECTION SETTING
1. Bottom O-ring

5. Place upper O-ring to 0 kgf (0 lbf).
6. Position the tensiometer on track, halfway between front and rear idler wheels.
7. Push the tensiometer downwards until bottom O-ring (deflection) be aligned with the bottom of slider shoe.

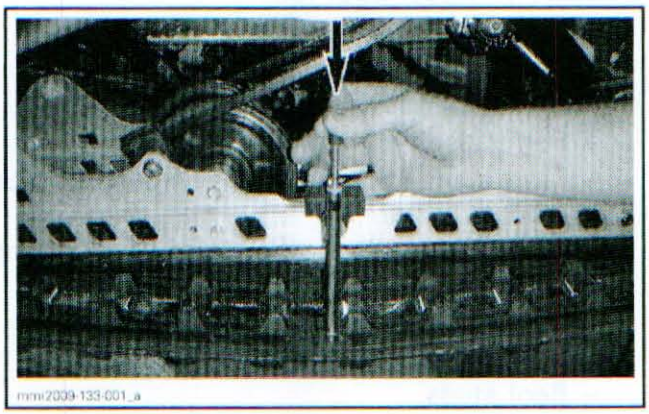

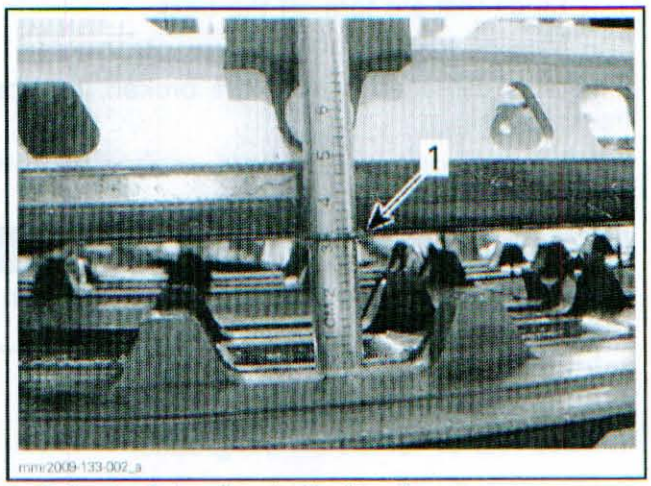

1. Deflection O-ring aligned with slider shoe

8. Read load recorded by the upper O-ring on the tensiometer.

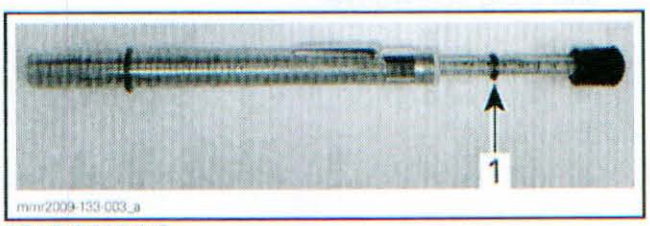

LOAD READING
1. Upper O-ring

www.midwestmanuals.com

9. Load reading must be as per the following table.

TRACK ADJUSTMENT SPECIFICATION	
Track deflection setting	3.2 cm (1.26 in)
Track load reading	6.0 kgf to 8.5 kgf (13 lbf to 19 lbf)

10. If load reading is not in accordance with the specification, adjust track tension. Refer to *TRACK TENSION ADJUSTMENT*.

NOTICE **Too much tension will result in power loss and excessive stresses on suspension components.**

Track Tension Adjustment

NOTE: After track tension adjustment, ride the snowmobile in snow about 15 to 20 minutes and recheck track tension.

1. Lift rear of vehicle and support it off the ground.
2. Remove rear idler wheel caps.

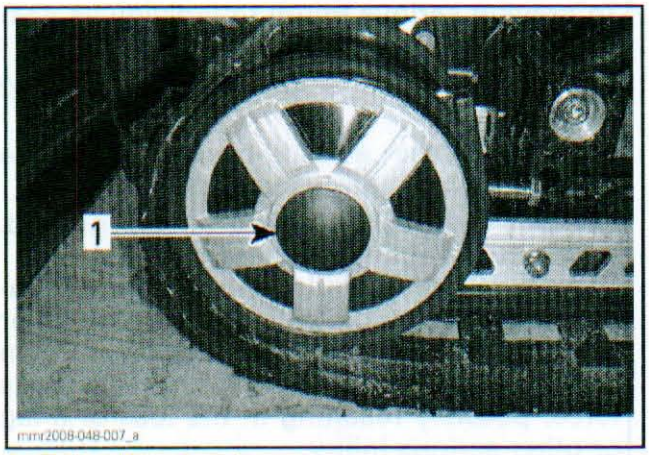

1. RH rear idler wheel cap

3. Loosen rear axle screws (one each side).



1. RH rear axle screw

4. Tighten or loosen both adjustment screws to increase or decrease track tension.

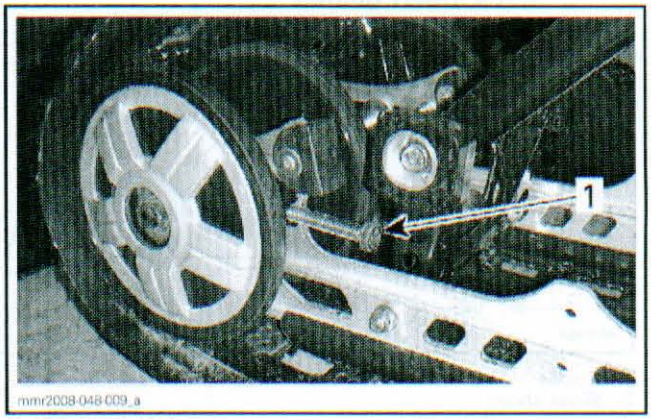

1. RH adjustment screw

5. Verify track tension, refer to *TRACK TENSION VERIFICATION*.

Track Alignment

⚠ WARNING

Before checking track alignment, ensure that the track is free of all particles which could be thrown out while track is rotating. Keep hands, tools, feet and clothing clear of track. Ensure no one is standing in close proximity to the vehicle. Never rotate at high speed.

1. Start engine and accelerate slightly so that track barely turns. This must be done in a short period of time (1 to 2 minutes).
2. Check that the track is well centered; equal distance on both sides between edges of track guides and slider shoes.

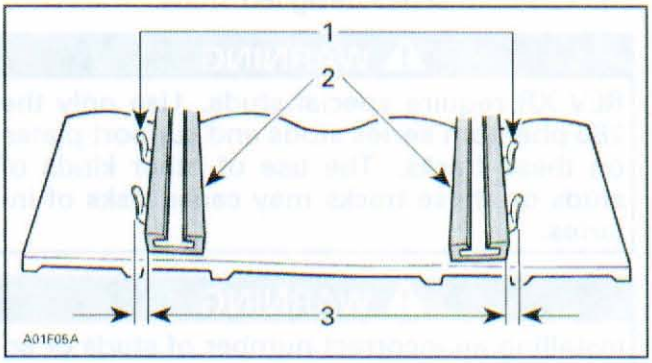

1. Guides
2. Slider shoes
3. Equal distance

3. To correct track alignment:
   3.1 Stop engine.
   3.2 Loosen rear wheel screws.

www.midwestmanuals.com

3.3 Tighten adjustment screw on side where the slider shoe is the farthest from the track insert guides.

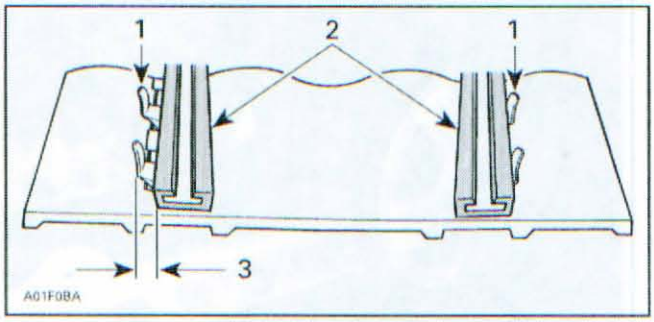

1. *Guides*
2. *Slider shoes*
3. *Tighten on this side*

4. Restart engine.
5. Rotate track slowly and recheck alignment.
6. If the satisfactory alignment is achieved:
   - 6.1 Tighten idler wheel retaining screws to 48 N•m (35 lbf•ft).
   - 6.2 Reinstall wheel caps.

TRACTION ENHANCING PRODUCTS (STUDS)

Important Safety Rules

All REV-XR tracks use special single ply of fabric track to reduce weight and rolling resistance. The conventional track design is a 2 layers of fabric and one layer of high strength tensile cord. These new tracks design is a single layer of fabric and one layer of tensile cord. This results in a thinner track and if studded, absolutely requires the use of the 286 Phantom series designed studs.

⚠ WARNING

REV-XR require special studs. Use only the 286 phantom series studs and support plates on these tracks. The use of other kinds of studs on these tracks may cause risks of injuries.

⚠ WARNING

Installing an incorrect number of studs or an improper installation could reduce the track life and possibly resulting in serious injury or death.

⚠ WARNING

Never stud a track that has not been approved for studs. Installing studs on an unapproved track could increase the risk of the track tearing or severing, possibly resulting in serious injury or death. Approved tracks can be identified by a stud symbol molded into the track surface.
Studs should only be installed in the locations indicated by molded bulges in the track surface.
Never stud a track with a profile of 35 mm (1.378 in) or more.
The maximum allowable stud penetration range is 6.4 mm to 9.5 mm (1/4 in to 3/8 in).
The number of studs installed must match the number of molded bulges in the track.
Strictly adhere to the specified tightening torque.

⚠ WARNING

To prevent serious injury to individuals near the snowmobile:
- **NEVER stand behind or near a moving track.**
- **ALWAYS use a wide-base snowmobile stand with a rear deflector panel.**
- **When the track is raised off the ground, only run it at lowest possible speed.**

Centrifugal force could cause debris, damaged or loose studs, pieces of torn track, or an entire severed track to be violently thrown backwards out of the tunnel with tremendous force, possibly resulting in the loss of a leg or other serious injury.

Effects of Having a Studded track on the Life of the Snowmobile

The use of traction enhancing products can increase the load and the stress on certain snowmobile components, as well as the vibration level. This can cause premature wear on parts such as belts, brake lining, bearings, chain, and chaincase sprockets, and on approved studded tracks, shorten track life. For this reason, it is even more important to follow the detailed maintenance program given in the *MAINTENANCE CHART.*

Studs on the track can also cause serious damage to the snowmobile if it is not equipped with the tunnel protectors designed for the particular model. Damage to the electrical wiring or perfora-

www.midwestmanuals.com

tion of the heat exchangers are potential hazards, that could cause the engine to overheat and be severely damaged.

⚠ WARNING

If tunnel protectors are excessively worn or not installed, the gas tank could be punctured, causing a fire.

Studs and Track Inspection

A visual inspection of the track should be performed before each use. Refer to *TRACK INSPECTION*.

Replace broken or damaged studs immediately. If the track shows signs of deterioration, it must be replaced immediately. In doubt, replace the track.

⚠ WARNING

Riding with a damaged track or studs could lead to loss of control, resulting in a risk of serious injury or death.

Stud Installation Tables

Use the following table for appropriate size and quantity of studs.

APPROVED STUDS ACCORDING TO TRACK LUG HEIGHT

LUG HEIGHT	STUD SIZE	QTY OF STUDS FOR A 120" TRACK	QTY OF STUDS FOR A 137" TRACK
1.000"	1.075"	84	96
1.250"	1.325"	84	96

Use the following table for appropriate tunnel protector kits.

TUNNEL PROTECTOR KITS

CHASSIS TYPE	TRACK DIMENSION	KIT P/N
REV-XR	All 120" and 137" (up to 1.250")	860 200 267

Stud Installation Procedure

Refer to manufacturer's instruction for complete installation procedure.

www.midwestmanuals.com

www.midwestmanuals.com

FRONT SUSPENSION

SERVICE TOOLS

Description	Part Number	Page
BALL JOINT EXTRACTOR	529 035 827	389
BALL JOINT INSTALLER	529 035 975	391
BALL JOINT REMOVER SUPPORT	529 036 121	391
SPRING REMOVER	529 036 007	386

Midwest Manuals
sales@midwestmanuals.com
www.midwestmanuals.com

www.midwestmanuals.com

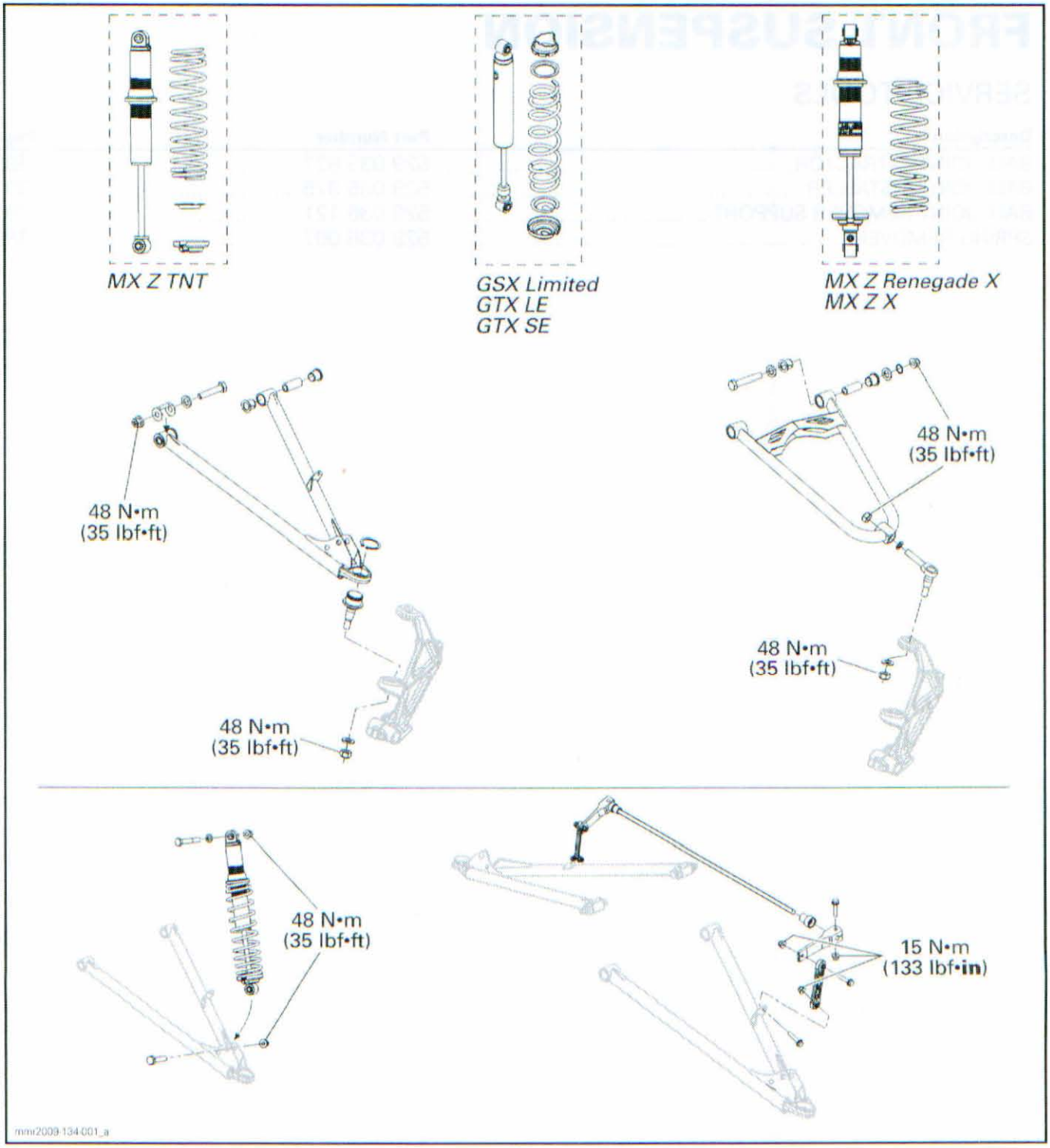

www.midwestmanuals.com

GENERAL

The procedure explained below is the same for the RH and LH sides unless otherwise noted.

During assembly/installation, use torque values and service products as in the exploded view.

Clean threads before applying a threadlocker. Refer to *SELF-LOCKING FASTENERS* and *LOCTITE APPLICATION* at the beginning of this manual for complete procedure.

⚠ WARNING

Torque wrench tightening specifications must be strictly adhered to.
Locking devices (e.g.: locking tabs, elastic stop nuts, cotter pins, etc.) must be replaced with new ones.

Check for loose, bent, worn out, rusted or otherwise damaged components. Replace the faulty components.

Hoses, cables or locking ties removed during a procedure must be reinstalled as per factory standards.

ADJUSTMENT

SPRING

SPRINGS ADJUSTMENT GUIDELINE		
HANDLING	STEERING	SOLUTION
Too soft	Too easy to turn	Increase spring preload
Too hard	Hard to turn	Decrease spring preload

⚠ WARNING

Adjust both springs to the same load. Uneven adjustment can cause poor handling and loss of stability, and/or control, and increase the risk of an accident.

Spring Preload Adjustment

Screw Type Adjustment

MX Z (Renegade X, TNT, X)

Grab and turn the spring to increase or decrease spring preload.

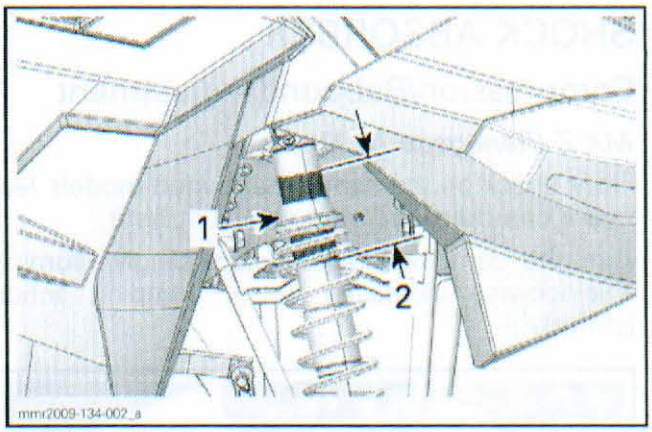

1. Adjustment ring
2. Ring positions

Cam Type Adjustment

Using the suspension adjustment tool (included in the tool kit), turn the cam to increase or decrease spring preload.

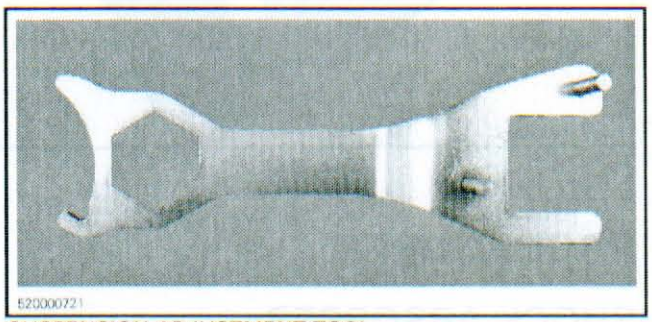

SUSPENSION ADJUSTMENT TOOL

GSX (Limited), GTX (LE, SE), MX Z (Renegade)

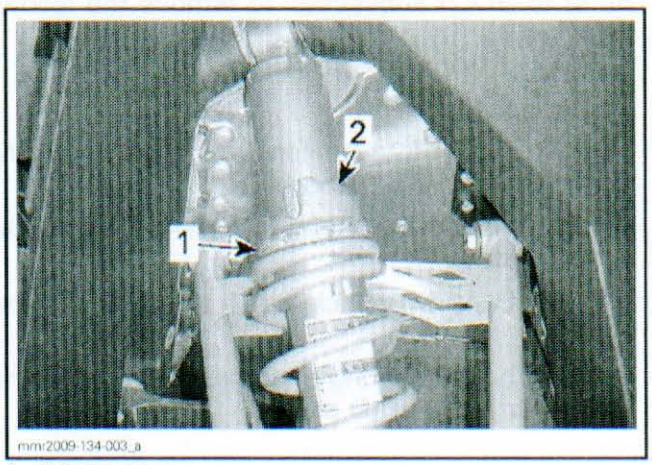

1. Adjustment cam
2. Cam positions

www.midwestmanuals.com

SHOCK ABSORBER

Compression/Rebound Adjustment

MX Z (Renegage X, X)

Front shock on the above mentioned models feature a compression/rebound adjustment.

Turn the damping adjuster accordingly. Turning it clockwise increases shock damping action (stiffer).

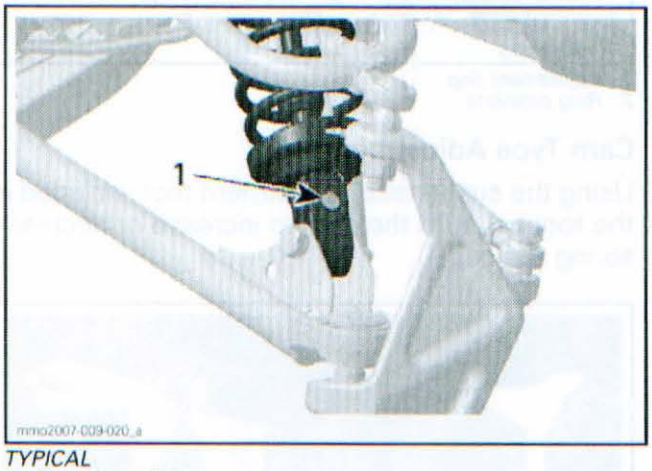

TYPICAL
1. Damping adjuster

PROCEDURES

SHOCK ABSORBER

Shock Absorber Removal

Refer to *BODY* subsection to remove the following:

- Hood
- Side panel(s).

Remove the air intake silencer. Refer to *AIR INTAKE SYSTEM* subsection.

Remove the muffler. Refer to *EXHAUST SYSTEM* subsection.

Lift the front of vehicle until skis are off the ground.

Remove bolts securing shock absorber to frame and lower suspension arm.

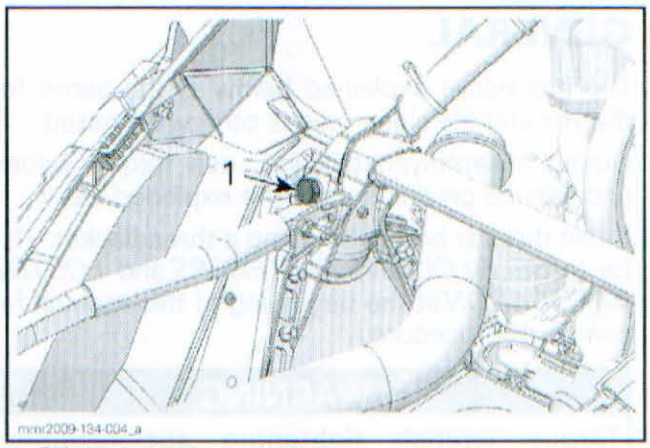

1. RH shock absorber upper bolt

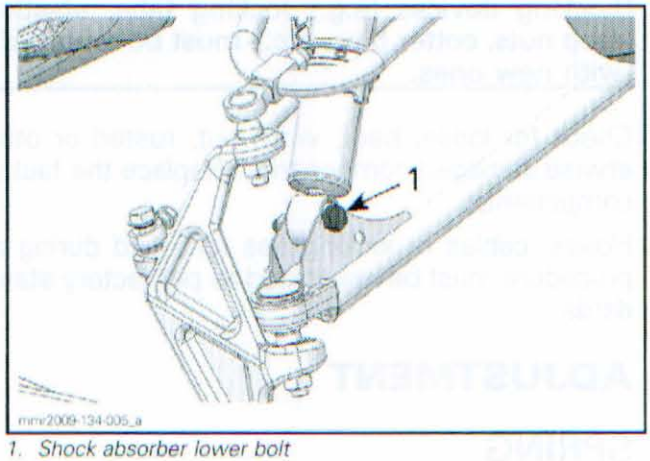

1. Shock absorber lower bolt

Remove the shock absorber.

Shock Absorber Disassembly

To remove spring from the shock absorber, use the SPRING REMOVER (P/N 529 036 007).

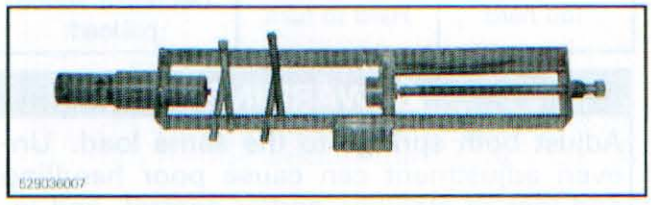

Place the tool in a vise.

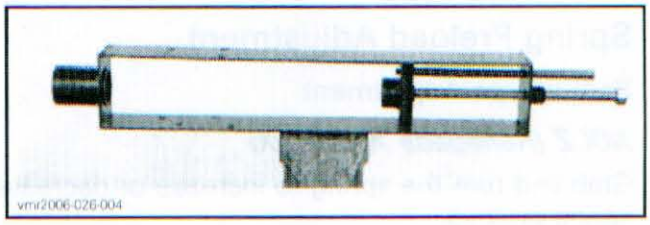

On models with a screw type adjuster, unscrew the adjuster completely.

Position the shock absorber in the tool and install the spring compressor pins.

www.midwestmanuals.com

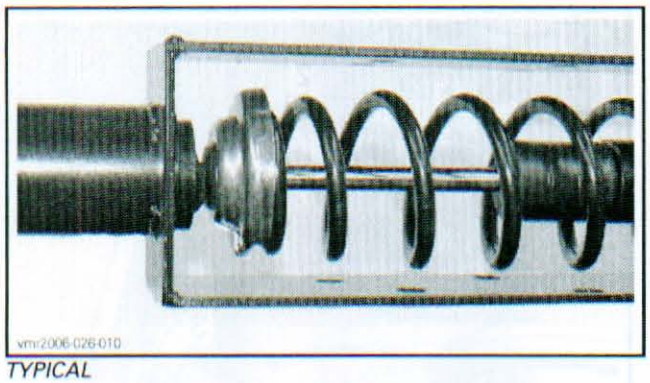

TYPICAL

Lock the end of the shock absorber with a bolt or a steel pin.

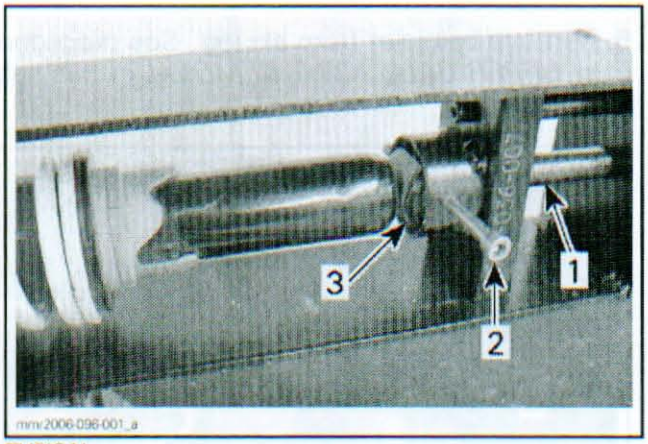

TYPICAL
1. *Spring compressor tool screw*
2. *Locking device (bolt or steel pin)*
3. *Shock absorber end*

Tighten the spring compressor tool screw until the spring is sufficiently compressed to remove spring locking devices.

Remove spring stopper then release the spring compressor tool screw.



TYPICAL

NOTE: On **MX Z (Renegade X, TNT, X) models**, front shock absorbers can be rebuilt. Refer to *REAR SUSPENSION* for complete procedure.

Shock Absorber Inspection

Inspect the spring for damage. Replace if necessary.

Inspect shock as following:

Hydraulic Shock

1. Examine shock for leaks. Extend and compress the piston at least 5 complete strokes with its rod upward.
2. After, check that shock moves smoothly and with uniform resistance over its entire stroke.

NOTE: For the first 5 complete strokes, it could be normal to note uneven resistance.

3. Check the following conditions that will denote a defective shock:
   - A skip or a hang back when reversing stroke at mid travel.
   - Seizing or binding condition except at extreme end of either stroke.
   - Oil leakage.
   - A gurgling noise, after completing one full compression and extension strokes.
4. If suspecting a shock is freezing, place it in a freezer (temperature below 0°C (32°F)) for 4 hours.
5. Push down on rod and note its resistance. If shock is frozen it will be much more difficult to compress than one in normal condition.
6. Renew if any faults are present.

Gas Shock

NOTE: Because of gas pressure, strong resistance is felt when compressing shock.

To inspect shock operation, or if suspecting an internal leak between oil chamber and gas chamber, check shock as follows:

1. Install shock in a vise clamping on its bottom eyelet with its rod upward. Verify the compression stroke when the rod is fully extended.
2. Completely push down the shock rod then release.
3. The shock should extend unassisted. Rod must come out at a steady speed. If speed suddenly increases particularly at end of extension, replace shock.
4. If suspecting a shock is freezing, place it in a freezer (temperature below 0°C (32°F)) for 4 hours.
5. Push down on rod and note its resistance. If shock is frozen it will be much more difficult to compress than one in normal condition.

www.midwestmanuals.com

Shock Absorber Assembly and Installation

For assembly and installation, reverse the disassembly and removal procedures.

NOTE: Always install shock valve outwards when applicable.

UPPER SUSPENSION ARM

Upper Suspension Arm Inspection

1. Check suspension arm for distortion or damage. Replace if necessary.
2. Move suspension arm from side to side then up and down. There should be no noticeable looseness. Replace bushings and/or sleeves if necessary.

NOTE: A play of 2 mm (.079 in) is acceptable when the suspension arm is moved forward and backward.

3. Check sleeves inside suspension arm attachments for wear or damage.

Upper Suspension Arm Removal

1. Lift the front of vehicle until skis are off the ground.
2. Remove muffler and tuned pipe. Refer to *EXHAUST SYSTEM* subsection.
3. Remove shock absorber upper bolt. See procedure in *SHOCK ABSORBER REMOVAL* in this subsection.
4. Remove the upper suspension arm bolts.

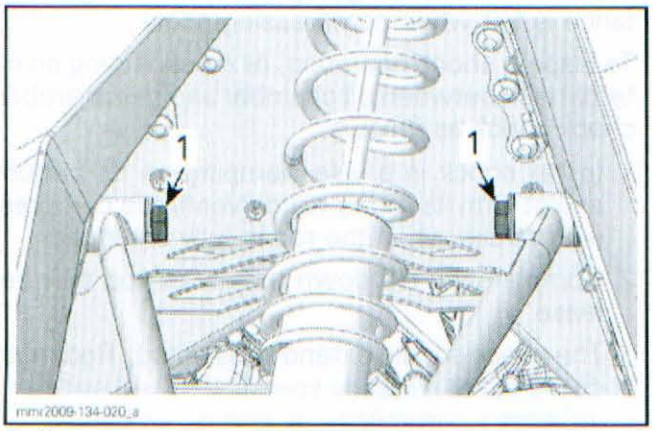

1. Upper suspension arm bolts

NOTE: Ensure not to lose the washer located between rear attachment and frame.

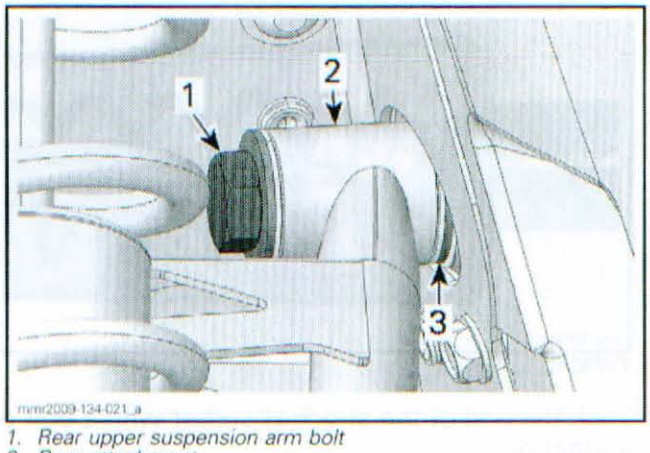

1. Rear upper suspension arm bolt
2. Rear attachment
3. Washer

5. Remove ball joint from ski leg. See procedure in *UPPER BALL JOINT REMOVAL* in this subsection.

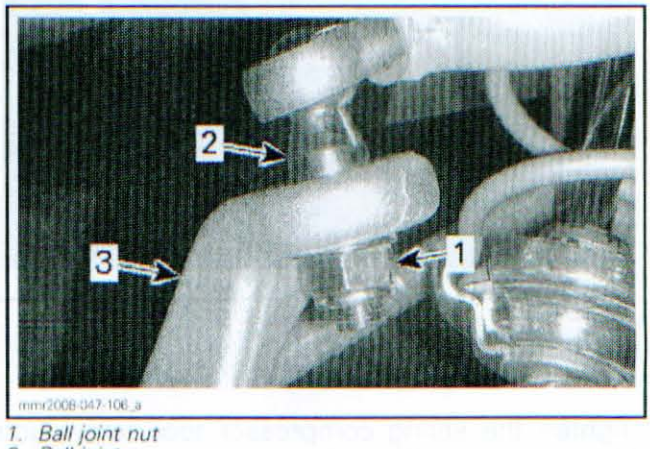

1. Ball joint nut
2. Ball joint
3. Ski leg

6. Remove upper suspension arm.

Upper Suspension Arm Installation

The installation is the reverse of the removal procedure.

UPPER BALL JOINT

Upper Ball Joint Inspection

Check both upper ball joints for damage, pitting, looseness and roughness. If so, replace with a new one.

Upper Ball Joint Removal

1. Position upper suspension arm so that ball joint becomes parallel with ski leg.
2. Detach tie-rod end from ski leg.

www.midwestmanuals.com

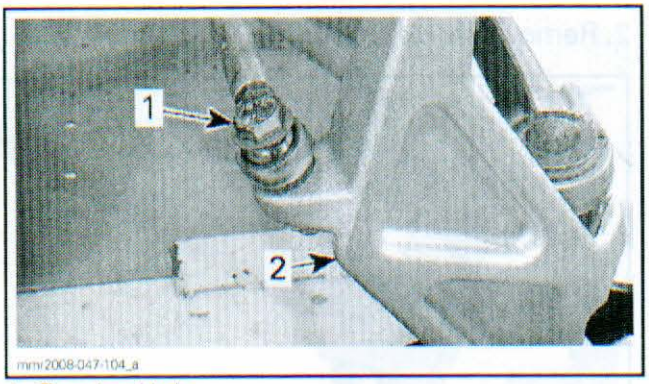

1. *Tie-rod end bolt*
2. *Ski leg*

3. Unscrew nut retaining ball joint housing to upper suspension arm.

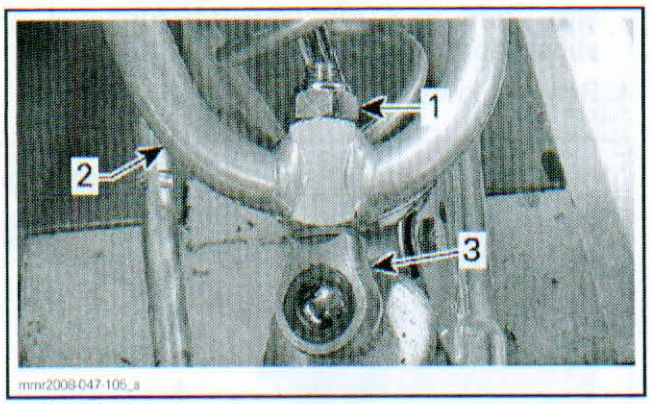

1. *Ball joint housing nut*
2. *Upper suspension arm*
3. *Ball joint housing*

4. Remove nut securing ball joint to ski leg.

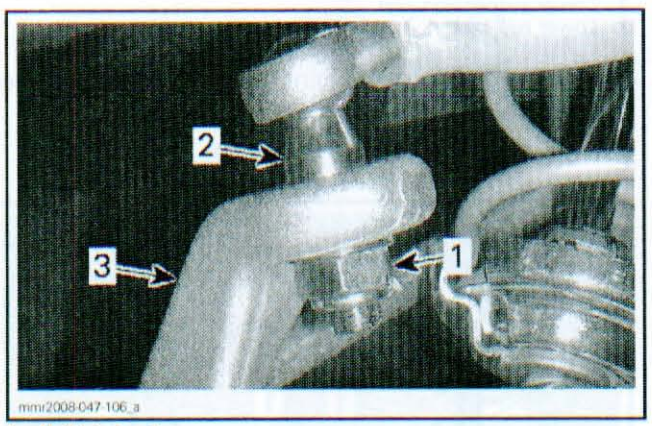

1. *Ball joint nut*
2. *Ball joint*
3. *Ski leg*

5. Install the BALL JOINT EXTRACTOR (P/N 529 035 827) and detach ball joint from ski leg.

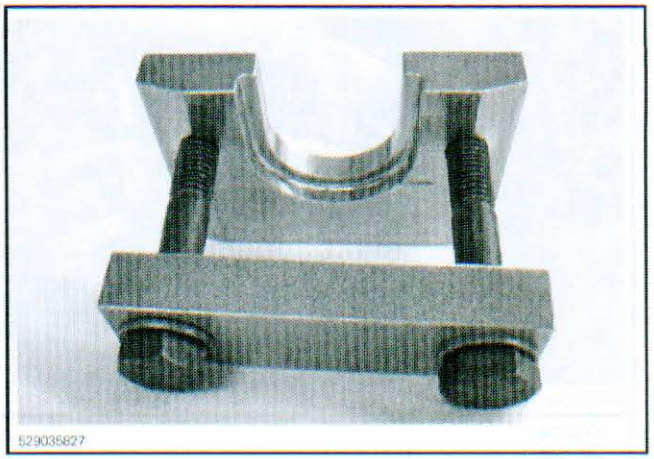

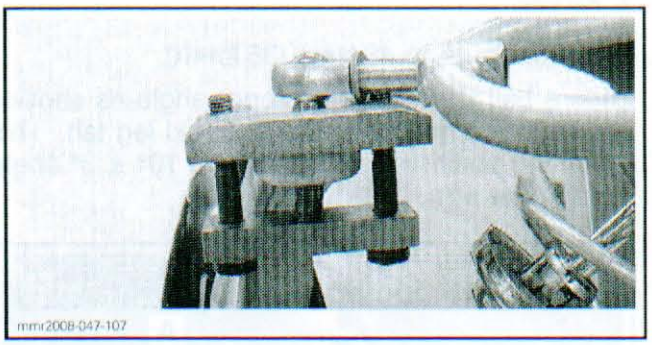

6. Remove ball joint.

Upper Ball Joint Installation

1. Install ball joint washers as shown.

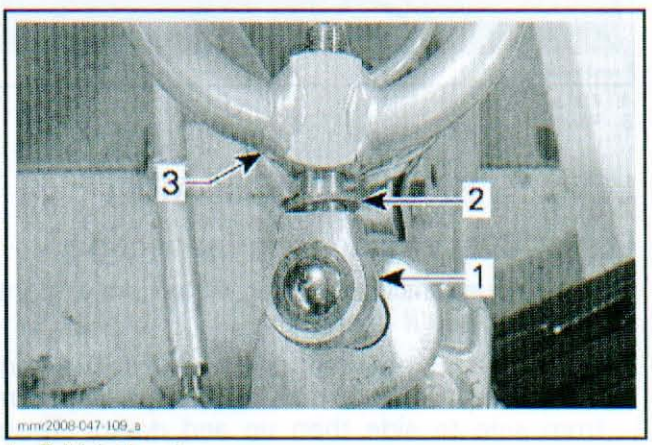

1. *Ball joint housing*
2. *Washer*
3. *Upper suspension arm*

www.midwestmanuals.com

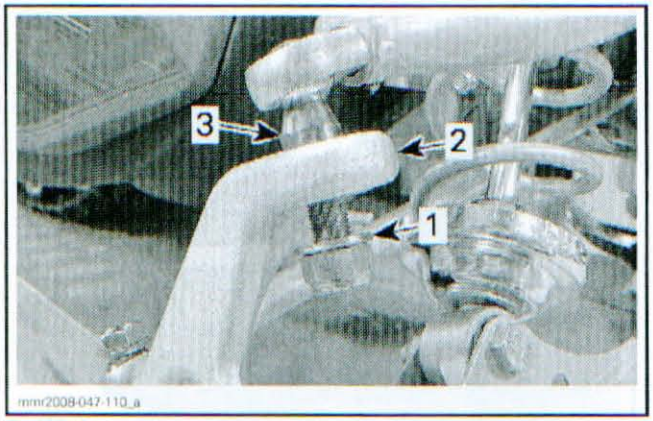

1. *Washer*
2. *Ski leg*
3. *Ball joint*

2. Tighten nuts to 48 N•m (35 lbf•ft).

Ensure ball joint has the proper angle as shown. The ball joint must be parallel to ski leg tab. This mounting position corresponds to 10° ± 3° angle from upper arm.

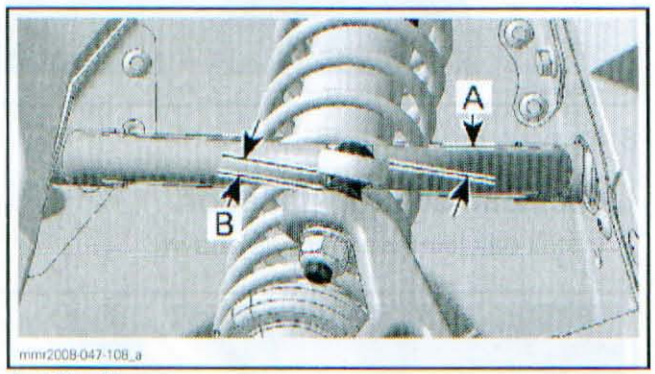

A. *10° ± 3°*
B. *Parallel*

LOWER SUSPENSION ARM

Lower Suspension Arm Inspection

1. Check suspension arm for distortion or damage. Replace if necessary.
2. Detach shock absorber and stabilizer bar from lower suspension arm. Move suspension arm from side to side then up and down. There should be no noticeable loose. Replace bushings and/or sleeves if necessary.

NOTE: A play of 2 mm (.079 in) is acceptable when the suspension arm is moved forward and backward.

3. Check sleeves inside suspension arm attachments for wear or damage.

Lower Suspension Arm Removal

1. Lift the front of vehicle until skis are off the ground.
2. Remove shock absorber lower bolt.

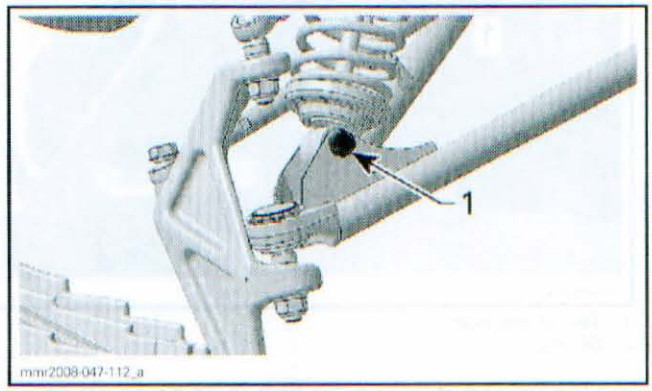

1. *Shock absorber lower bolt*

3. Detach stabilizer link from lower suspension arm. Refer to *STABILIZER BAR* further in this subsection.
4. Remove lower ball joint nuts.

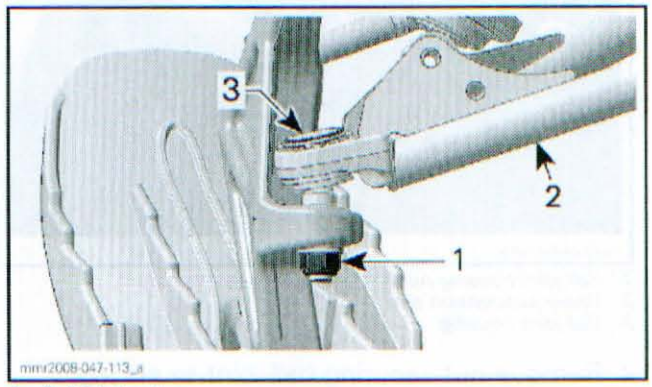

1. *Ball joint nut*
2. *Lower suspension arm*
3. *Lower ball joint*

5. Using a suitable ball joint remover, detach lower ball joint from ski leg.
6. Remove suspension arm bolts.

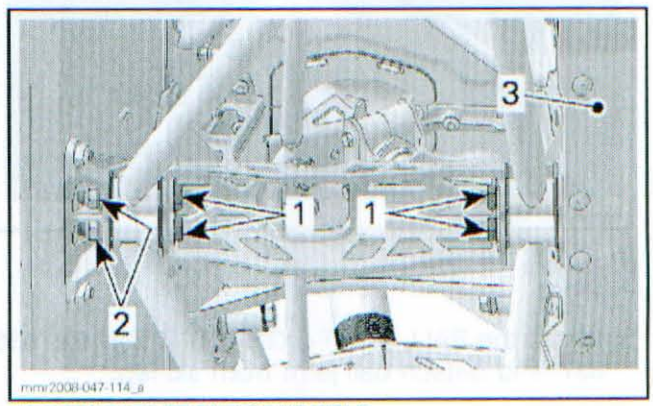

UNDERNEATH FRONT OF VEHICLE
1. *Suspension arm bolts*
2. *Rear nuts*
3. *Bottom pan*

www.midwestmanuals.com

NOTE: To hold rear nuts, modify a 15 mm opened wrench as shown.

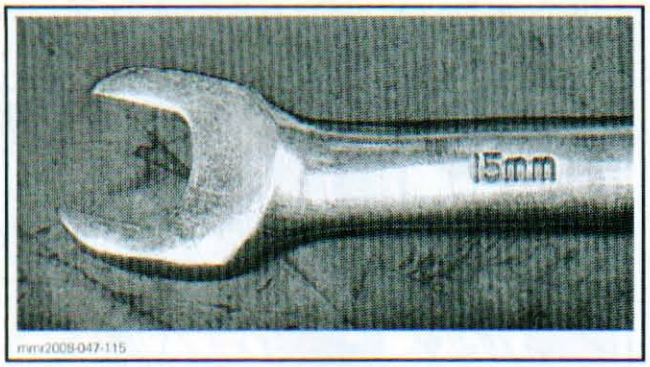

7. Remove lower suspension arm from vehicle.

Lower Suspension Arm Installation

The installation is the reverse of the removal procedure. However, pay attention to the following.

1. Install a wear plate over bushings.
2. Position the wear plate on top.
3. Fold all tabs against bushings.

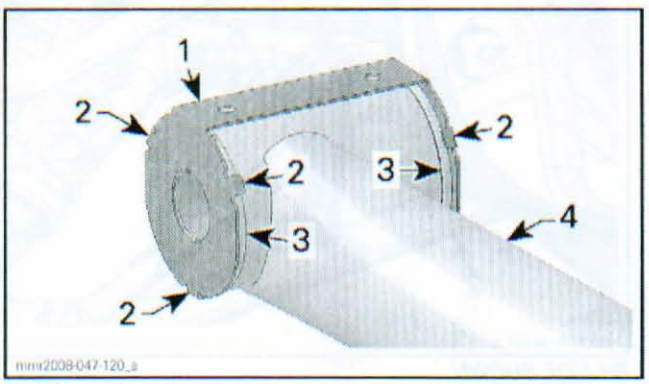

1. *Wear plate*
2. *Wear plate tabs*
3. *Bushings*
4. *Lower suspension arm*

Install all other removed parts.

LOWER BALL JOINT

Lower Ball Joint Inspection

Inspect ball joint end for damage. Ensure it's moving freely without play. Replace ball joints as required.

Lower Ball Joint Removal

1. Remove the *LOWER SUSPENSION ARM*, see procedure in this subsection.
2. Remove circlip securing ball joint to suspension arm.

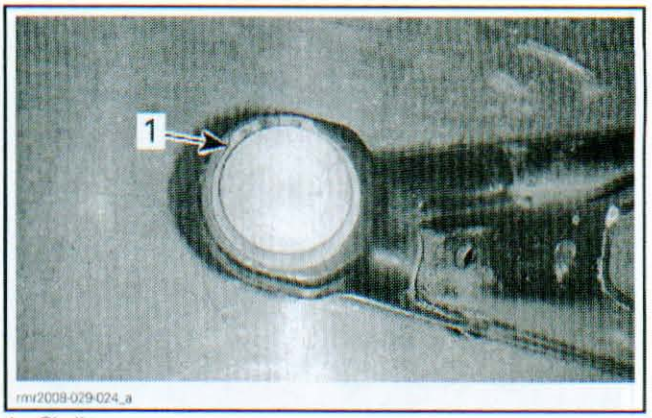

1. *Circlip*

3. Using a press and the BALL JOINT REMOVER SUPPORT (P/N 529 036 121), press ball joint out of the lower suspension arm.

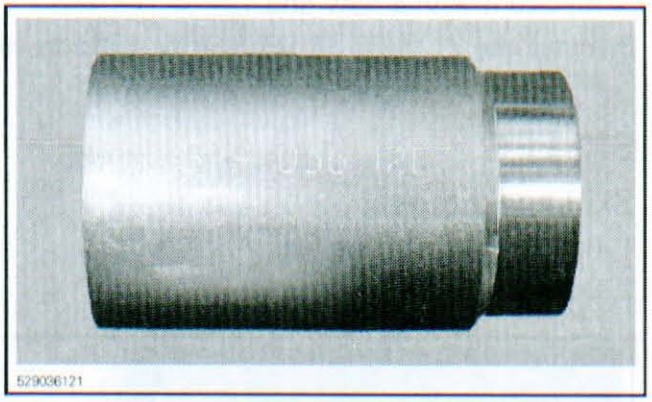

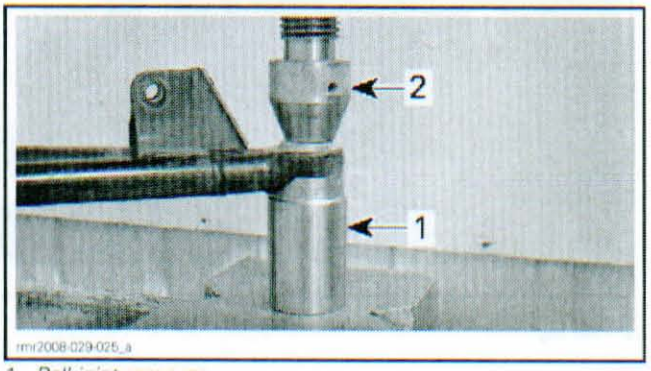

1. *Ball joint remover*
2. *Press*

Lower Ball Joint Installation

1. Using a press, the BALL JOINT REMOVER SUPPORT (P/N 529 036 121) and the BALL JOINT INSTALLER (P/N 529 035 975), press ball joint into the suspension arm end.

www.midwestmanuals.com

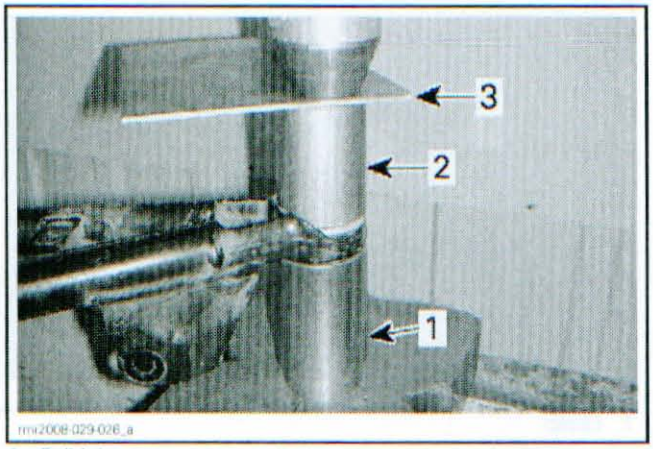

1. Ball joint remover support
2. Ball joint installer
3. Steel plate

2. Reinstall the circlip. If the circlip seems loose, replace it with a new one.
3. Install the *LOWER SUSPENSION ARM* on vehicle, see procedure in this subsection.

SKI LEG

Ski Leg Removal

1. Remove ski from ski leg.
2. Detach tie-rod end from ski leg.

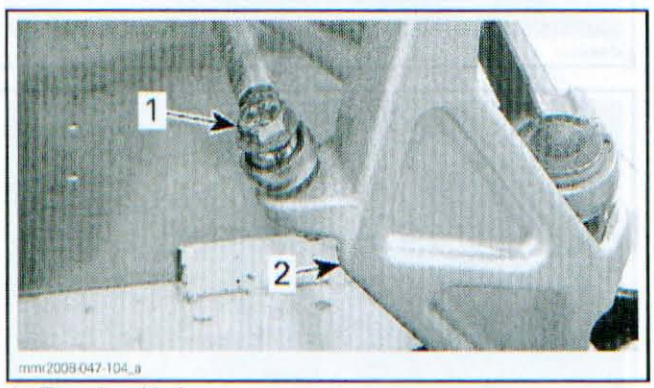

1. Tie-rod end bolt
2. Ski leg

3. Remove upper and lower ball joints from ski leg. Refer to *UPPER BALL JOINT* and *LOWER BALL JOINT* in this subsection.

Ski Leg Installation

The installation is the reverse of the removal procedure.

STABILIZER BAR

Stabilizer Bar Removal

1. Remove the RH side panel. Refer to *BODY* subsection.
2. Remove the muffler. Refer to *EXHAUST SYSTEM* subsection.
3. Remove the cap at the bottom of the RH side bottom pan.

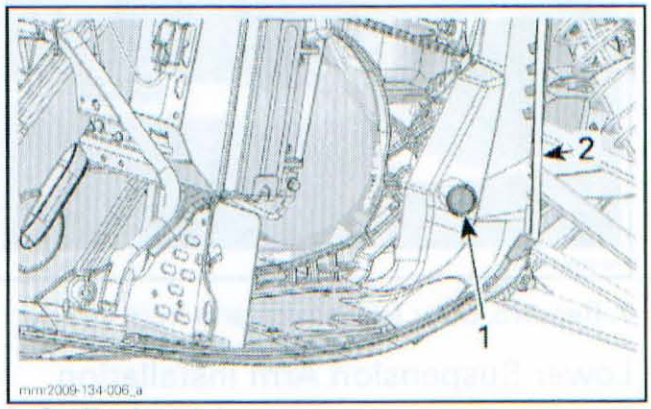

1. Stabilizer bar cap
2. RH side bottom pan

4. Remove bolts securing stabilizer links to lower suspension arms.

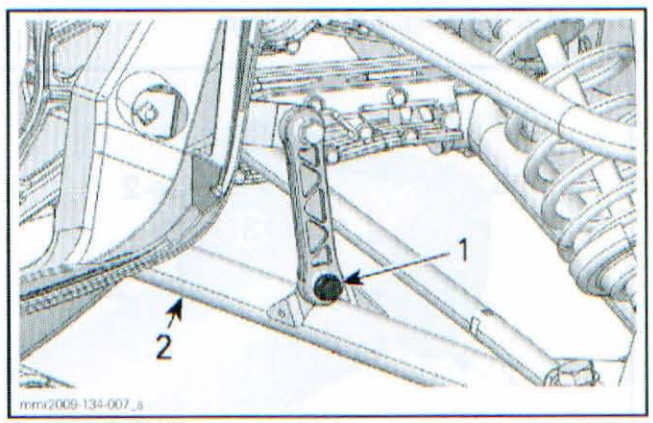

RH SIDE SHOWN
1. Stabilizer link bolt
2. Lower suspension arm

5. Unscrew stabilizer lever bolts.
6. Remove stabilizer levers from stabilizer bar.

www.midwestmanuals.com

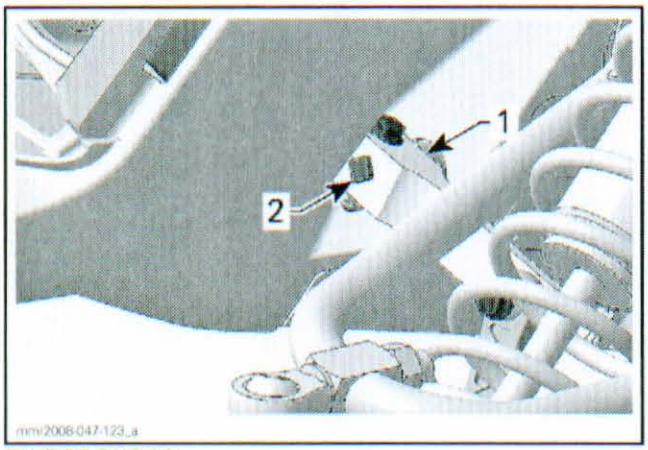

RH SIDE SHOWN
1. *Stabilizer lever*
2. *Stabilizer bar*

7. Slide stabilizer bar out of vehicle.

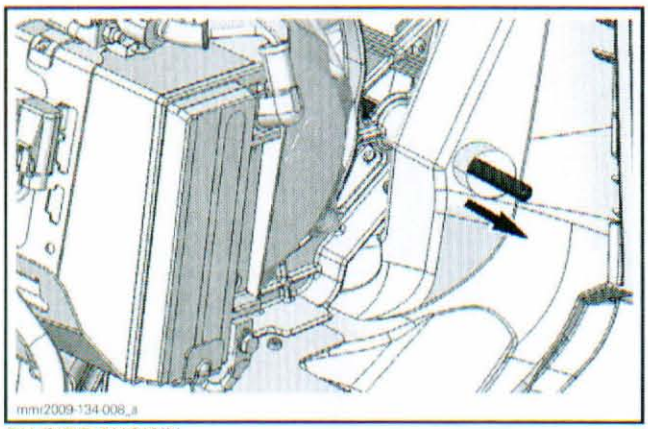

RH SIDE SHOWN

Stabilizer Bar Installation

The installation is the reverse of the removal procedure.

www.midwestmanuals.com

www.midwestmanuals.com

REAR SUSPENSION

SERVICE TOOLS

Description	Part Number	Page
ENGINE LEAK DOWN TEST KIT	529 035 661	429
FLOATING PISTON PULLER	529 035 901	415–416
FLOATING PISTON PULLER	529 035 907	409
FLUKE 115 DIGITAL MULTIMETER	529 035 868	428, 431, 434
GAS FILL TOOL KIT	503 190 102	408, 414, 417
GAS SHOCK VALVE TOOL (TIRE VALVE TYPE)	529 035 570	414
SHOCK RETAINER TOOL	529 035 769	408
SHOCK WRENCH	529 035 727	408
VACUUM PRESSURE PUMP	529 021 800	410

SERVICE PRODUCTS

Description	Part Number	Page
LOCTITE 271 (RED)	293 800 005	411
LOCTITE 592 (PIPE SEALANT)	293 800 018	430, 435–436
MOLYKOTE G-N	420 297 433	411–412
PULLEY FLANGE CLEANER	413 711 809	414, 416–417
SHOCK ABSORBER OIL	293 600 035	412, 416
SUSPENSION GREASE	293 550 033	425

RAILS AND IDLER WHEELS

GSX, GTX and MX Z

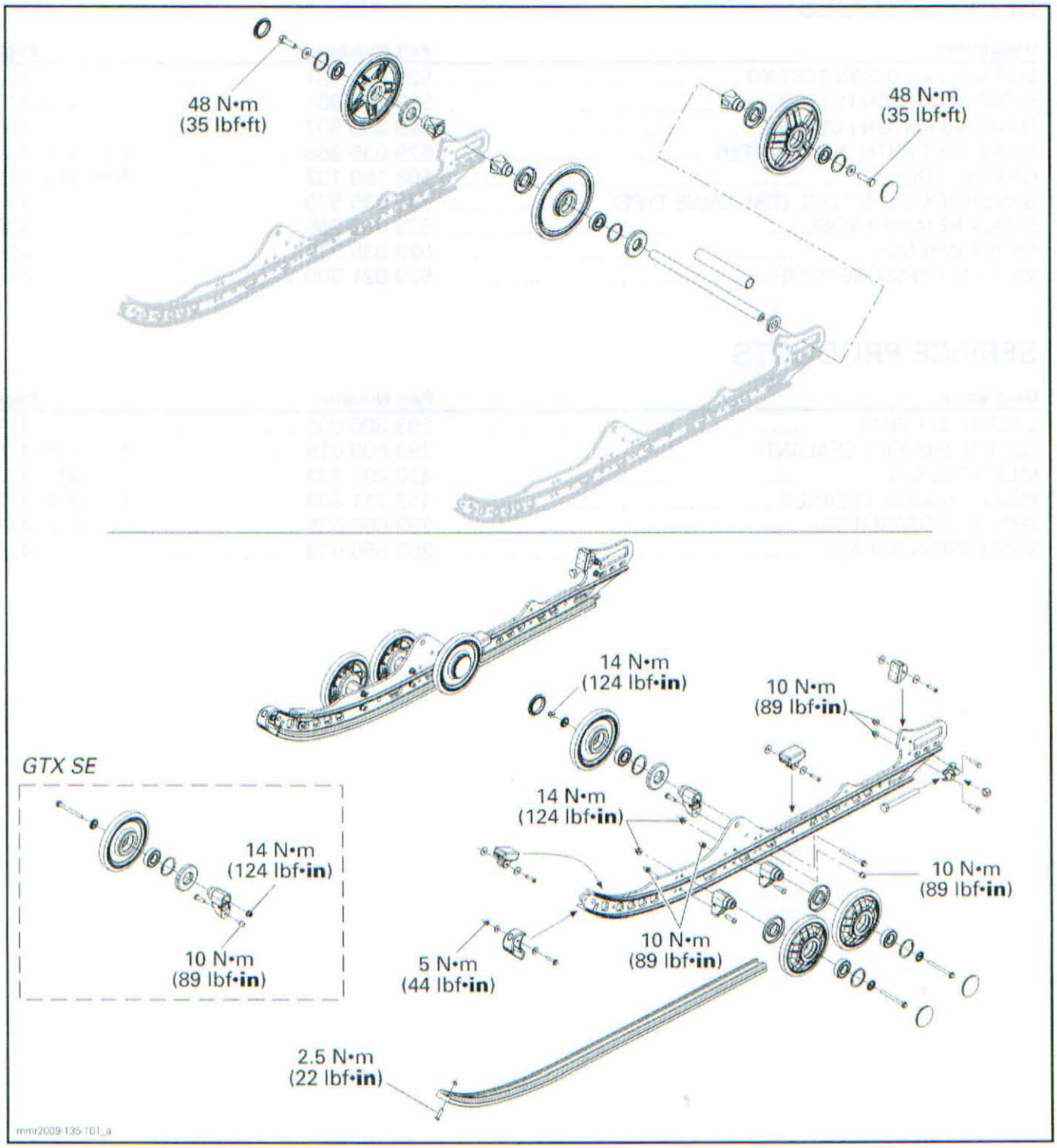

www.midwestmanuals.com

FRONT ARM

GSX and MX Z (X, TNT)

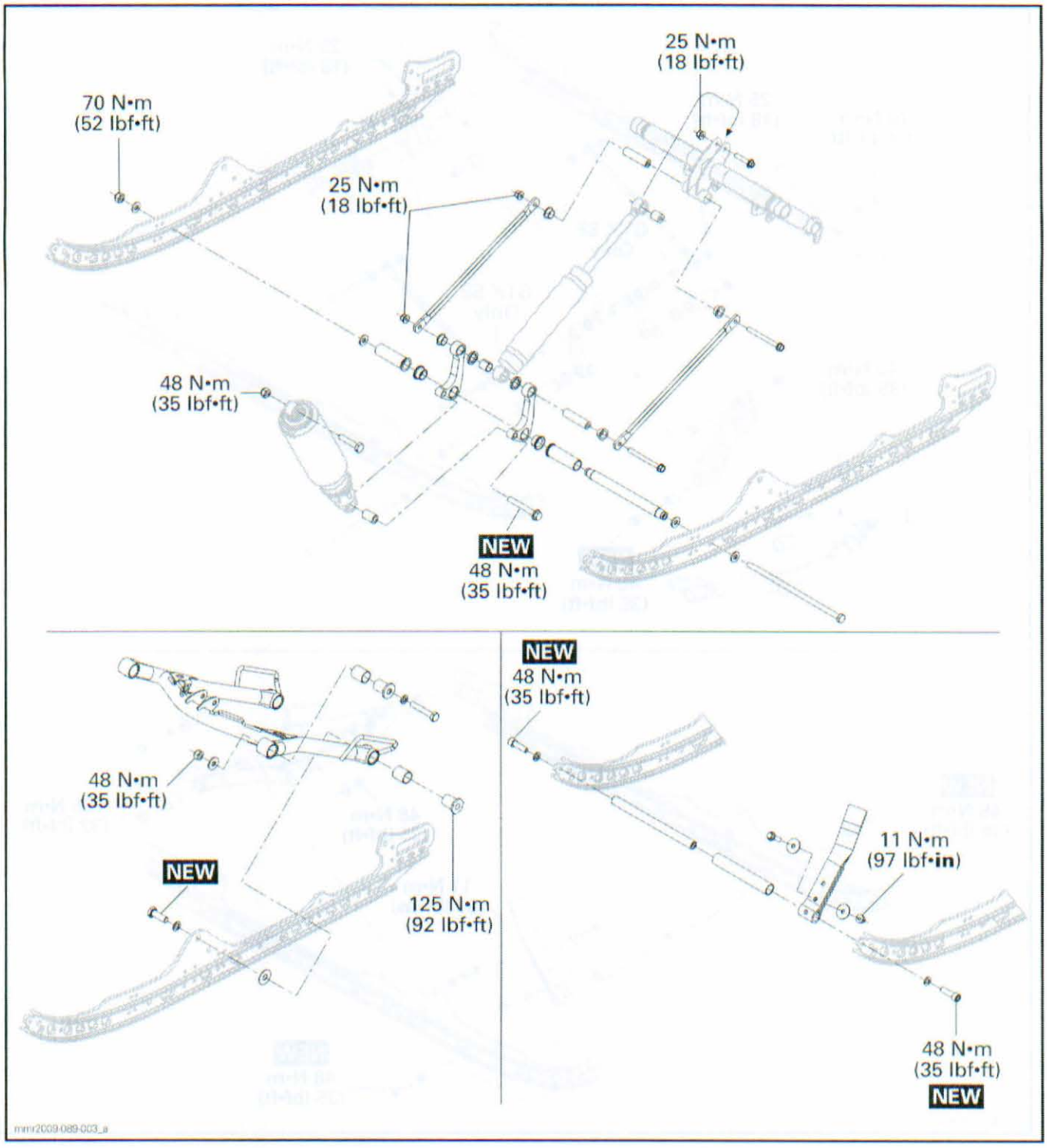

www.midwestmanuals.com

FRONT ARM

GTX and MX Z (Renegade, Renegade X)

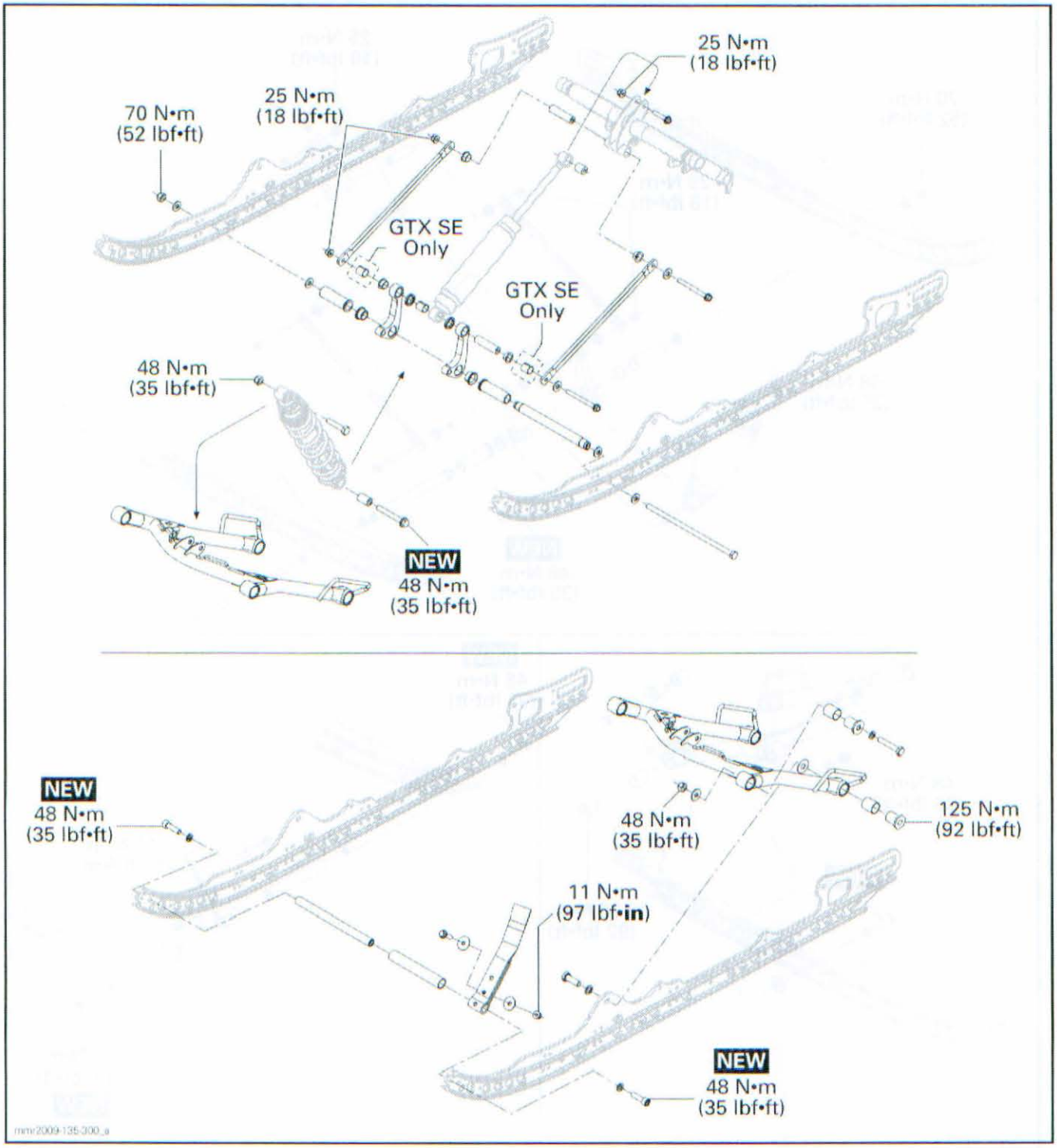

www.midwestmanuals.com

REAR ARM

GSX, GTX and MX Z

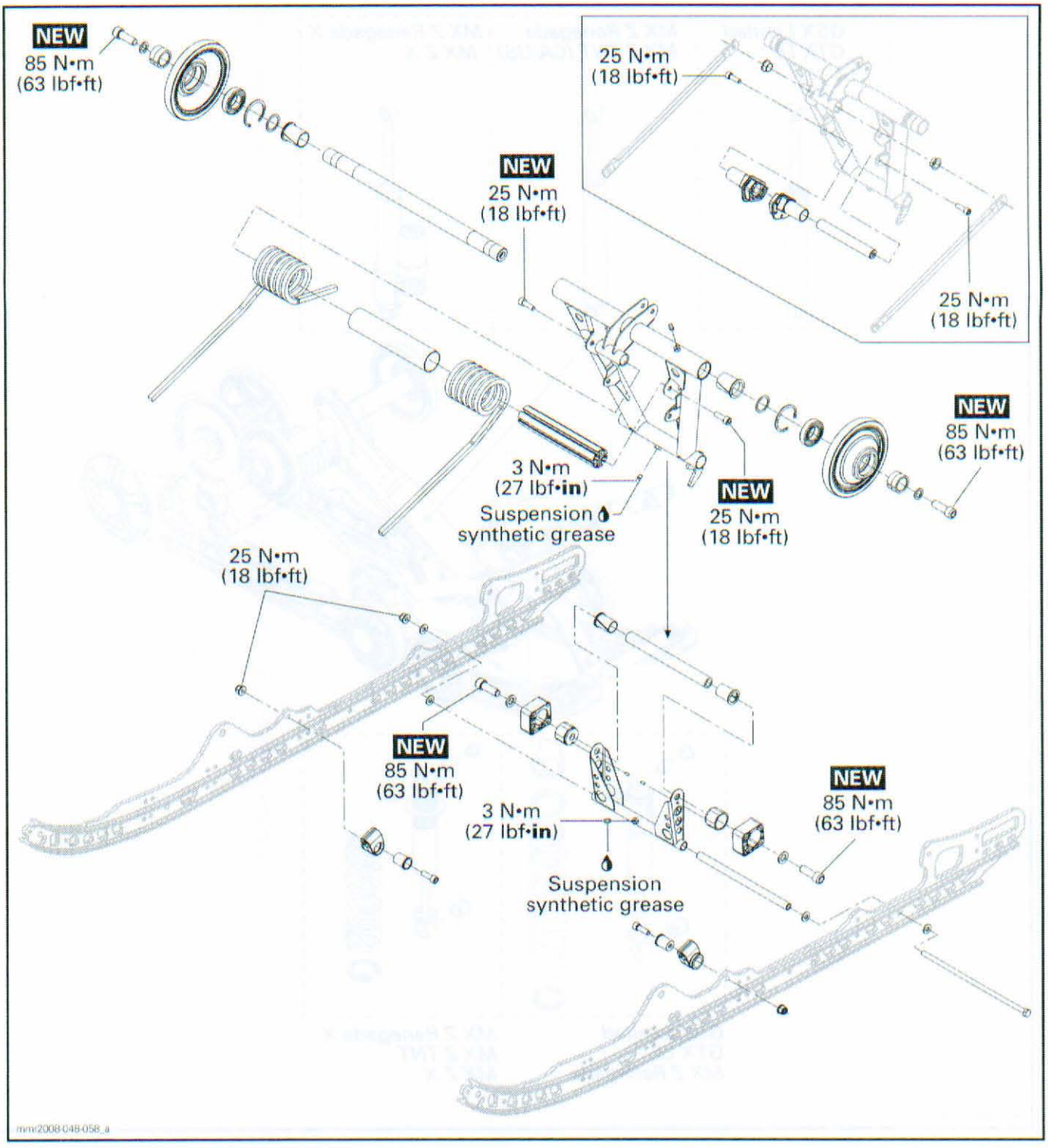

www.midwestmanuals.com

SHOCK ABSORBERS

GSX, GTX LE and MX Z

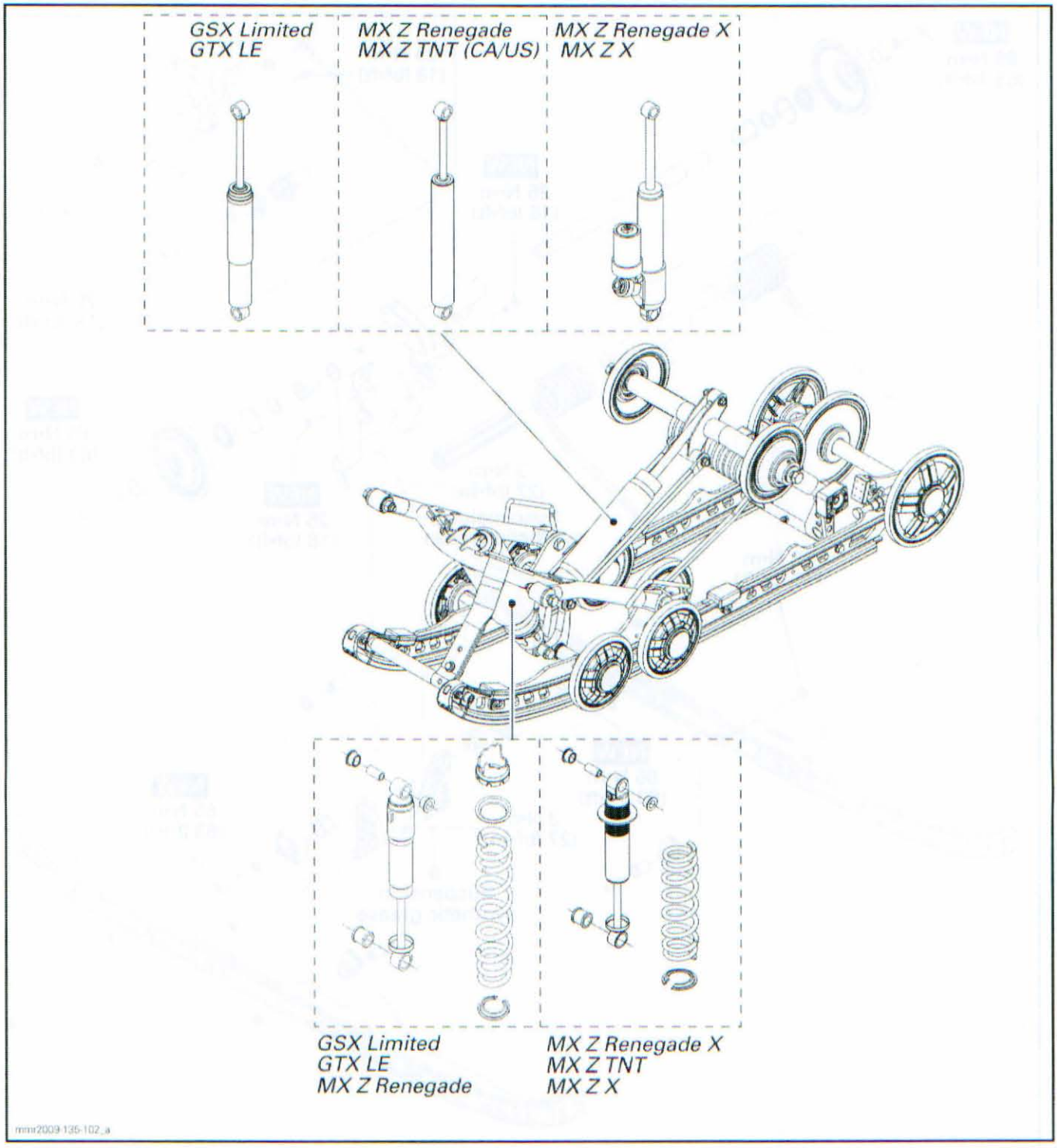

www.midwestmanuals.com

SHOCK ABSORBERS

GTX SE

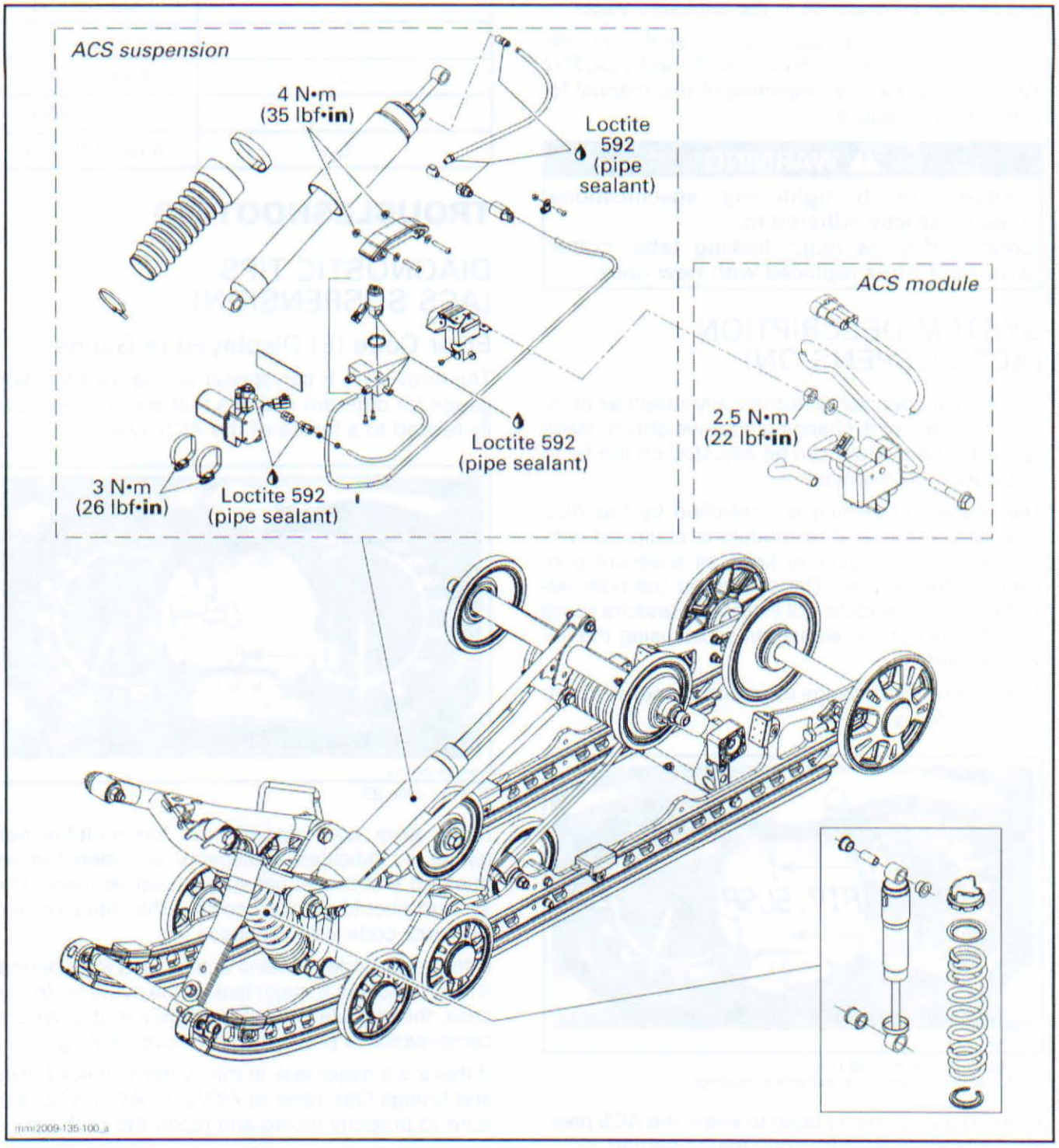

www.midwestmanuals.com

GENERAL

During assembly/installation, use torque values and service products as in the exploded views.

Clean threads before applying a threadlocker. Refer to *SELF-LOCKING FASTENERS* and *LOCTITE APPLICATION* at the beginning of this manual for complete procedure.

⚠ WARNING

Torque wrench tightening specifications must be strictly adhered to.
Locking devices (e.g.: locking tabs, cotter pins, etc.) must replaced with new ones.

SYSTEM DESCRIPTION (ACS SUSPENSION)

The ACS suspension automatically keeps air pressure constant with changing rider weights or loads applied. The system can be adjusted on the fly to suit rider's preferences.

The requested setting is controlled by the ACS electronic module. The module is equipped with a pressure transducer to keep air pressure constant in the system. Depending on the rider adjustment, the module will increase pressure using the compressor or release pressure using the solenoid valve.

The multifunction gauge indicates suspension setting as follows.

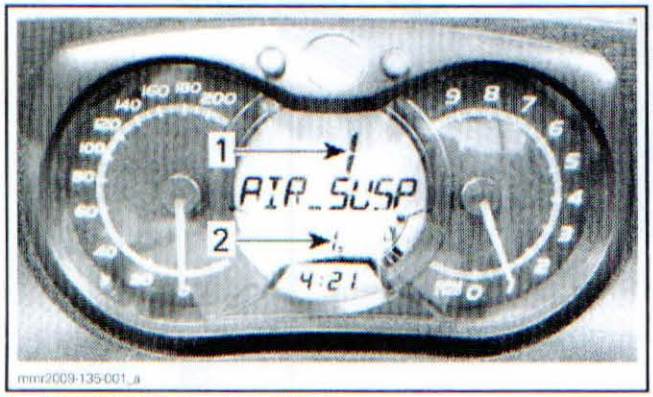

mmr2009-135-001_a

1. *Requested setting (set point)*
2. *Actual setting (pressure transducer reading)*

Refer to the following table to know the ACS pressure related to multifunction gauge setting.

SUSPENSION MODE (MULTIFUNCTION GAUGE)	AIR SUSPENSION PRESSURE
1	1 bar (15 PSI)
2	2.8 bar (40 PSI)
3	4.5 bar (65 PSI)
4	5 bar (90 PSI)
5	8 bar (120 PSI)

TROUBLESHOOTING

DIAGNOSTIC TIPS (ACS SUSPENSION)

Error Code (E) Displayed in Gauge

The error code **E** can appear on the multifunction gauge for different reasons that are not necessarily related to a failure of the ACS system.

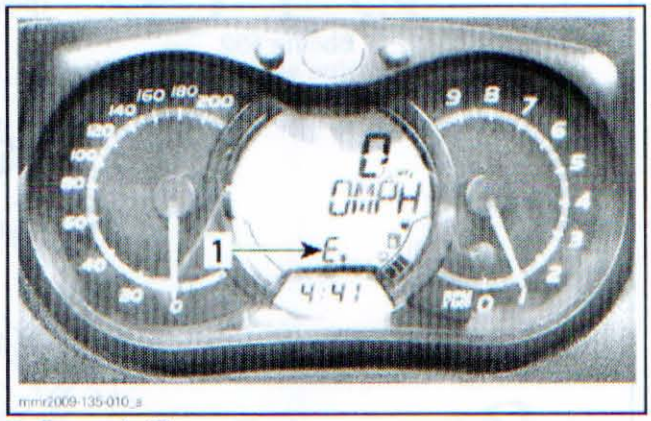

mmr2009-135-010_a

1. *Error code (E)*

If the error code appears on the multifunction gauge, it indicates a disparity between the requested and the actual suspension settings. The system should react to correct this situation and the error code will disappear.

If the error code remains active for a long period, it may indicates a major leak in the system. In this case, the module will automatically shut down the compressor to prevent it from overheating.

If there is a major leak in the system, check hoses and fittings first, refer to *HOSE LEAK TEST* procedure to properly locate and repair the problem.

If no leak is detected from hoses or fittings, inspect the compressor check valve, refer to *COMPRESSOR CHECK VALVE LEAK TEST*.

www.midwestmanuals.com

Error Code (E) Displayed and Suspension Setting Can Not Be Adjusted

If no leak is found, it is probably an electrical problem. In this case, an electrical failure of the compressor or the solenoid valve will result the impossibility to change the actual suspension setting.

After multiple attempts to change suspension setting, the module will activate error code **E**. Refer to *TESTING SEQUENCE* for further troubleshooting procedure.

TESTING SEQUENCE (ACS SUSPENSION)

Suspension Setting Can Not Be Changed

1. Check ACS module signal continuity.
2. Check ACS module input voltage.
3. Check ACS module ground.

Refer to *ACS MODULE* to see the complete testing procedures.

Suspension Setting Can Be Changed to Decrease Pressure Only

1. Check ACS compressor operation.
2. Check ACS compressor input voltage.

Refer to *ACS COMPRESSOR* to see the complete testing procedures.

Suspension Setting Can Be Changed To Increase Pressure Only

1. Check ACS solenoid valve operation.
2. Check ACS solenoid valve input voltage.

Refer to *ACS SOLENOID VALVE* to see the complete testing procedures.

Requested Setting Display Does Not Changed in Gauge

Check the heat selector switch as detailed in *HEATED THROTTLE LEVER* in the *LIGHTS GAUGE AND ACCESSORIES* subsection.

PROCEDURES

NOTE: Many parts can be changed with rear suspension in place. When specified, refer to *SUSPENSION ASSEMBLY* to remove rear suspension from vehicle.

SUSPENSION ASSEMBLY

Suspension Assembly Removal

1. Lift rear of vehicle and support it off the ground.
2. Completely loosen track tension.
3. Remove and discard rear arm bolts from chassis. Use the following procedure to remove bolts easily.
   - 3.1 Unscrew one of the socket screws securing the rear arm to frame.

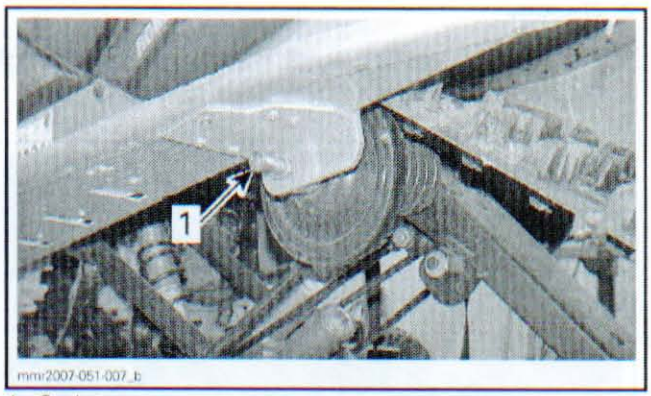

1. Socket screw

   - 3.2 Replace this socket screw with an hexagonal bolt (longer than socket screw) and a nut.
   - 3.3 Screw in the hexagonal bolt by approximately 7 turns.
   - 3.4 Hold the hexagonal bolt and tighten locking nut.

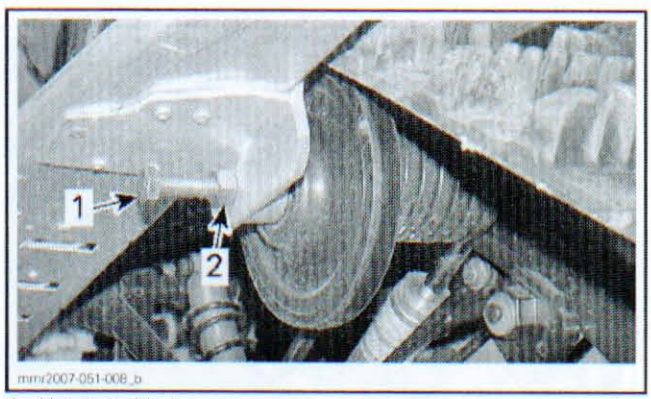

1. Hexagonal bolt
2. Locking nut

   - 3.5 Unscrew the socket screw on the other side then unlock nut and remove the hexagonal bolt.
4. Remove bolts retaining front arm to tunnel.

www.midwestmanuals.com

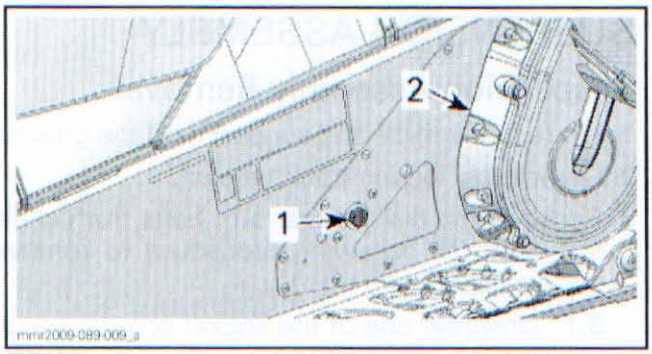

TYPICAL
1. *Front arm bolt*
2. *Chaincase*

5. Lift rear of vehicle until front arm as enough clearance to pass underneath tunnel.

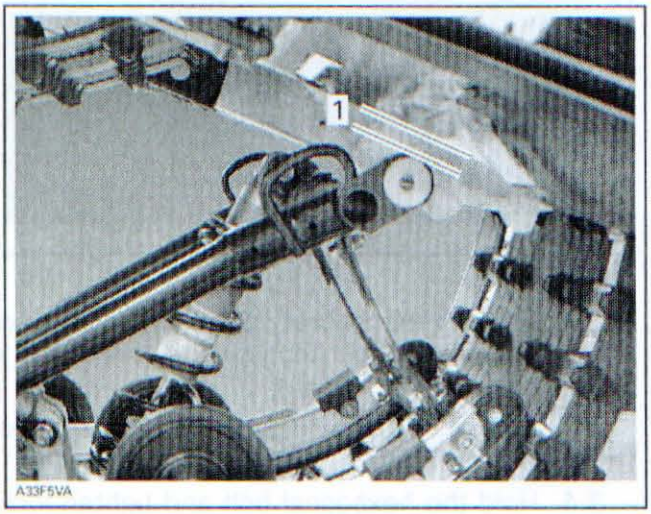

TYPICAL
1. *Enough clearance*

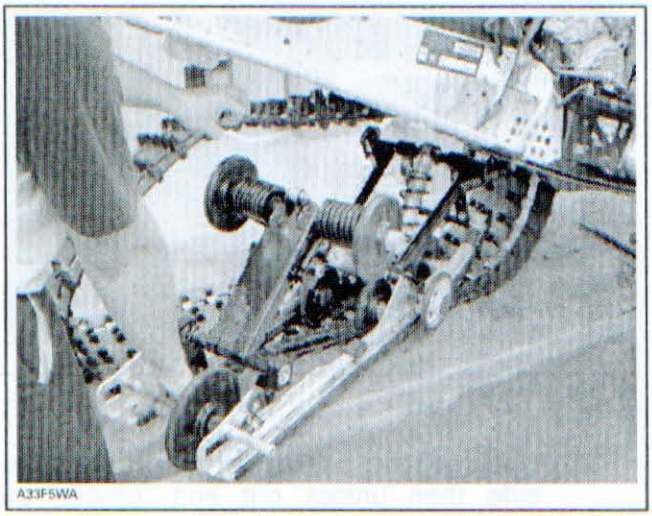

TYPICAL — REMOVE SUSPENSION

Suspension Assembly Installation

Installation is the reverse of removal procedure. Pay attention to the following details.

1. Inspect track thoroughly before reinstalling suspension. Refer to *TRACK* subsection.
2. Install suspension into track with front portion first.
3. Install front arm bolts.
4. Torque them to 48 N•m (35 lbf•ft).
5. Install **NEW** rear arm bolts and tighten them.

REAR ARM BOLTS TIGHTENING	
GSX, GTX and MX Z	85 N•m (63 lbf•ft)

6. Adjust track tension.

REAR AXLE

Rear Axle Removal

1. Lift rear of vehicle and support it off the ground.
2. Remove rear idler wheel caps.

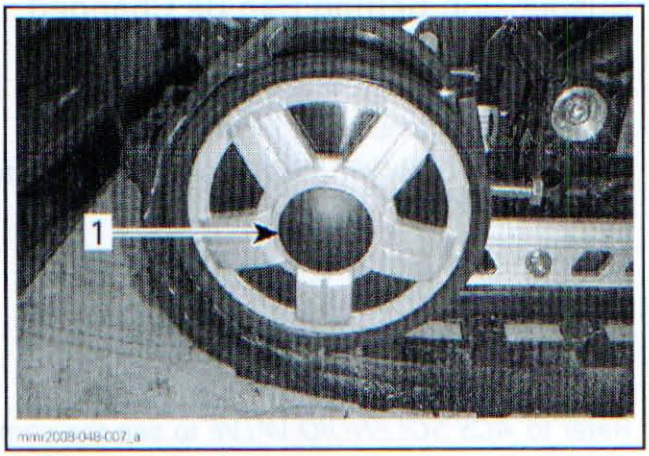

1. *RH rear idler wheel cap*

3. Loosen rear axle screws (one each side).

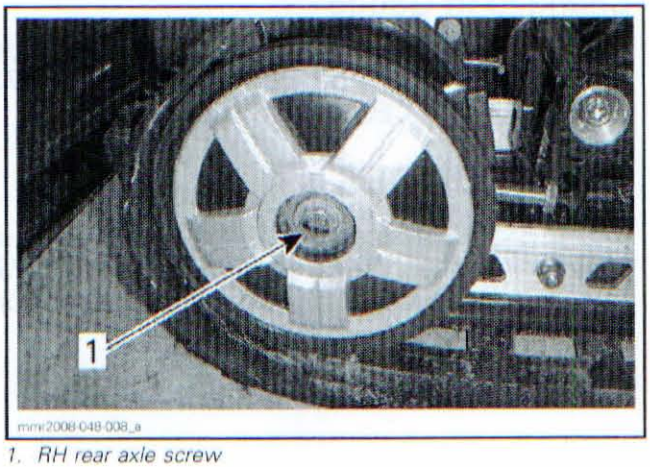

1. *RH rear axle screw*

www.midwestmanuals.com

4. Completely loosen track tension by unscrewing both adjustment screws.

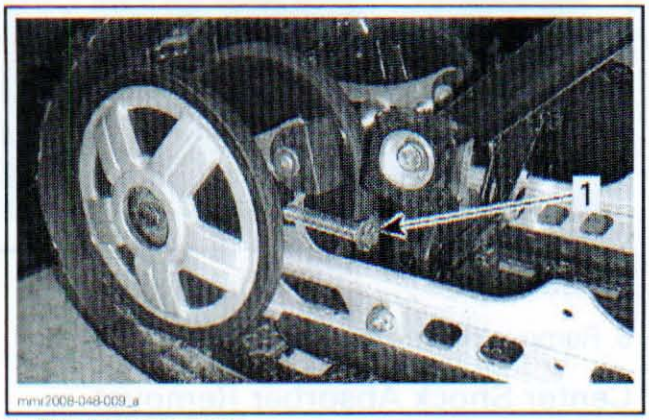

1. RH adjustment screw

5. Remove both rear axle screws.
6. Remove rear idler wheels, seals and wheel spacers.

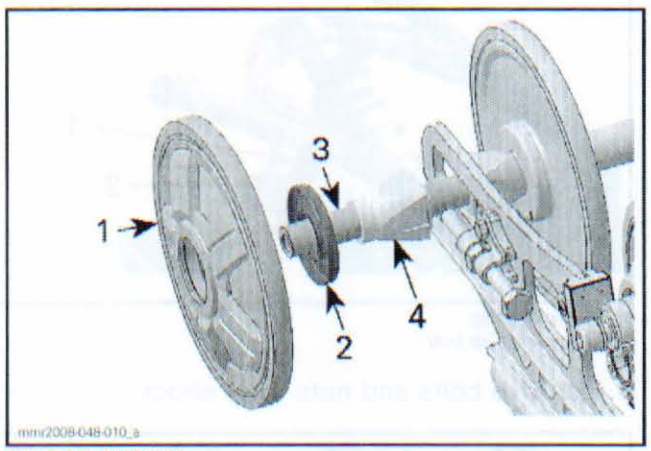

RH SIDE SHOWN
1. Rear idler wheel
2. Seal
3. Rear axle
4. Wheel spacer

7. Pull out the rear axle.

Rear Axle Installation

The installation is the reverse of removal procedure. However, pay attention to the following.

1. Make sure to position all parts correctly.

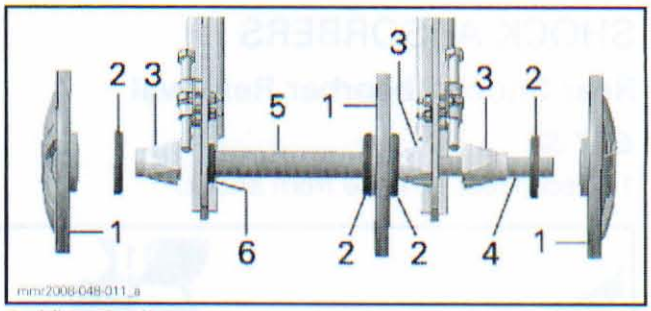

1. Idler wheels
2. Seals
3. Wheel spacers
4. Rear axle
5. Rear axle spacer
6. Washer

2. Position wheel spacers with a flat side up and a groove in front of tensioner screw.

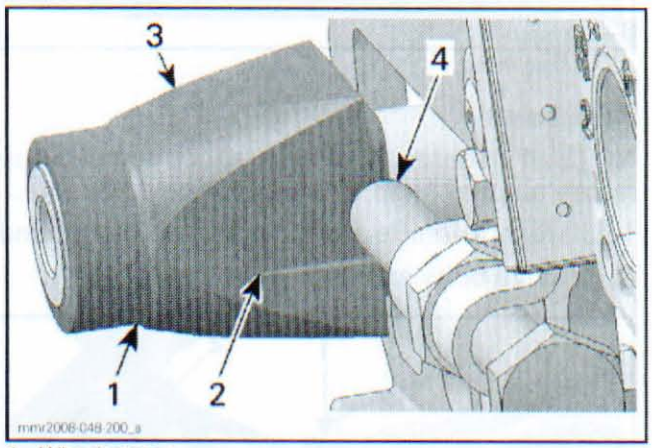

1. Wheel spacer
2. Groove
3. Flat side
4. Tensioner screw

NOTE: When tightening rear axle, make sure each wheel spacer protuberance is engaged into runner slot.

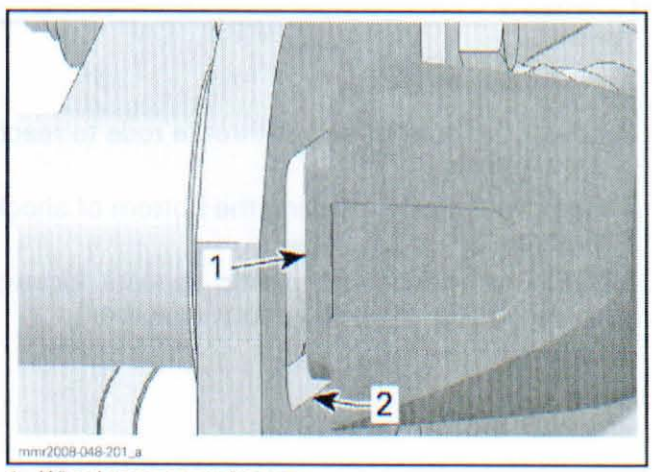

1. Wheel spacer protuberance
2. Runner slot

3. Adjust track tension. Refer to *TRACK* subsection.

www.midwestmanuals.com

SHOCK ABSORBERS

Rear Shock Absorber Removal

GTX SE

1. Disconnect air hose from shock.

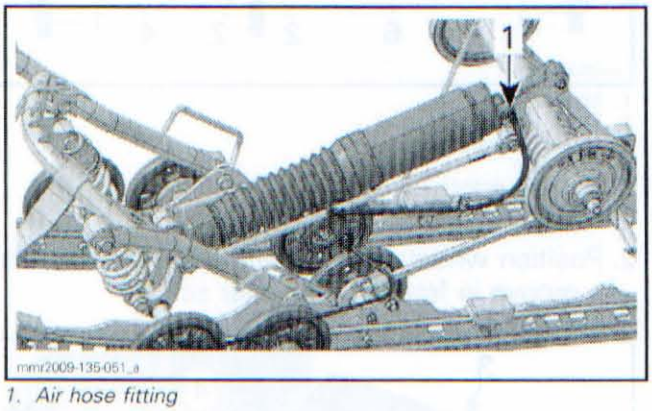

1. Air hose fitting

All Models

NOTE: If necessary, to ease shock removal, unfasten stopper strap to release shock pressure.

1. Lift rear of vehicle and support it off the ground.
2. Remove bolts and nuts from shock.

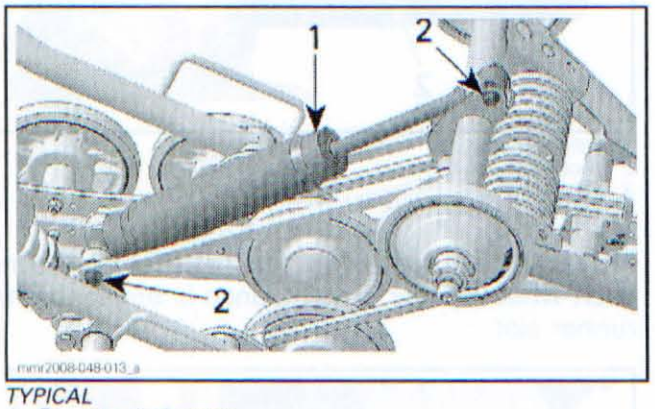

TYPICAL
1. Rear shock absorber
2. Remove bolts and nuts

3. Lower the bottom end of throttle rods to reach the bar axle.
4. Remove bar axle retaining the bottom of shock absorber.

NOTE: Pay attention to plastic spacers located between rocker arms and shock absorber.

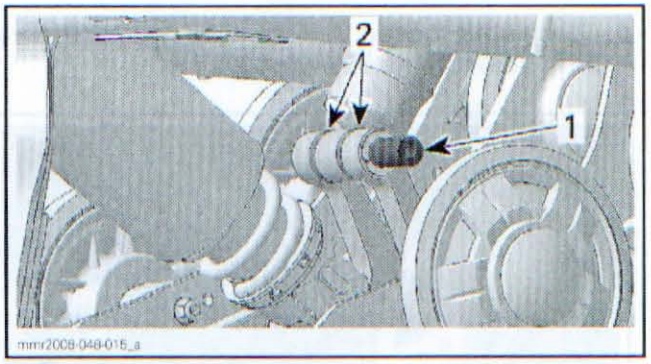

1. Bar axle
2. Plastic spacers

5. Remove rear shock absorber.

Center Shock Absorber Removal

1. Lift the rear of vehicle and support it off the ground.
2. Unfasten stopper strap.

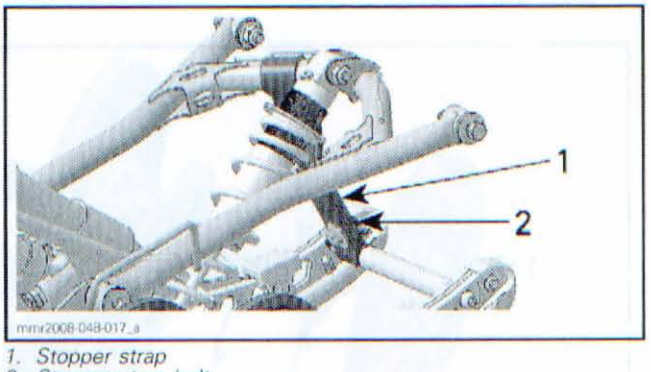

1. Stopper strap
2. Stopper strap bolt

3. Remove bolts and nuts from shock.

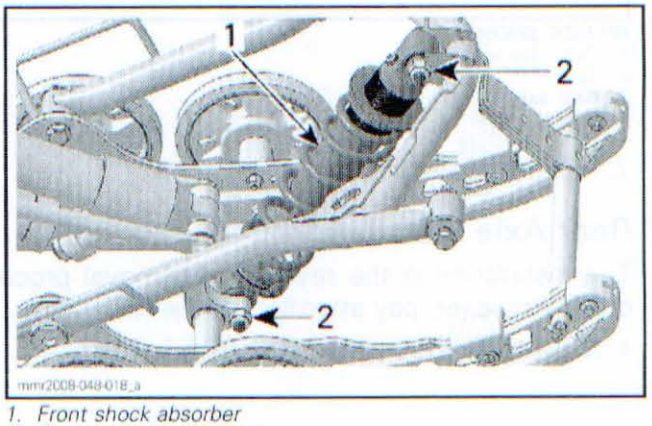

1. Front shock absorber
2. Remove bolts and nuts

Shock Absorber Inspection

Hydraulic Shock

1. Secure the shock body end in a vise with its rod upward.

www.midwestmanuals.com

NOTICE Do not clamp directly on shock body.

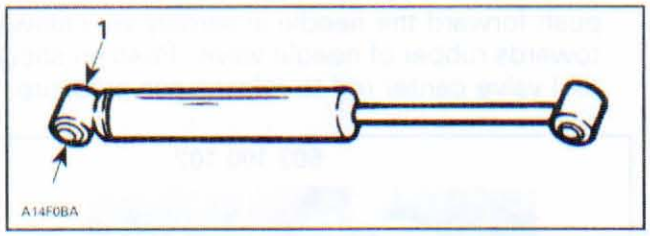

1. Clamp

2. Examine shock for leaks. Extend and compress the piston at least 5 complete strokes with its rod upward.
3. After, check that shock moves smoothly and with uniform resistance over its entire stroke.

NOTE: For the first 5 complete strokes, it could be normal to note uneven resistance.

4. Check the following conditions that will denote a defective shock:
   - A skip or a hang back when reversing stroke at mid travel.
   - Seizing or binding condition except at extreme end of either stroke.
   - Oil leakage.
   - A gurgling noise, after completing one full compression and extension strokes.
5. If suspecting a shock is freezing, place shock in a freezer (temperature below 0°C (32°F)) for 4 hours.
6. Push down on rod and note its resistance. If shock is frozen it will be much more difficult to compress than one in normal condition.
7. Renew if any faults are present.

Gas Shock Except Variable Rate

1. Because of gas pressure, strong resistance is felt when compressing shock.
2. To inspect shock operation, or if suspecting an internal leak between oil chamber and gas chamber, check shock as follows:
3. Install shock in a vise clamping on its bottom eyelet with its rod upward. Verify the compression stroke when the rod is fully extended.
4. Completely push down the shock rod then release.
5. The shock should extend unassisted. Rod must come out at a steady speed. If speed suddenly increases particularly at end of extension, replace shock.
6. If suspecting a shock is freezing, place shock in a freezer (temperature below 0°C (32°F)) for 4 hours.
7. Push down on rod and note its resistance. If shock is frozen it will be much more difficult to compress than one in normal condition.
8. Renew if any faults are present.

Variable Rate Gas Shock

1. Because of gas pressure, strong resistance is felt when compressing shock.
2. To inspect shock operation, or if suspecting an internal leak between oil chamber and gas chamber, check shock as follows:
3. Install shock in a vise clamping on its bottom eyelet with its rod upward. Verify the compression stroke when the rod is fully extended.
4. Push down the shock rod. The feeling should be stiff for around the first 25 mm (1 in), then softer from 25 mm to 50 mm (1 in to 2 in) and stiffer again after that. This stiff/soft/stiff phenomenon shows the normal operation of shock.
5. When released, the shock should extend unassisted. The rod speed coming out will go slow - faster and slow again due to the VR zone.
6. If suspecting a shock is freezing, place shock in a freezer (temperature below 0°C (32°F)) for 4 hours.
7. Push down on rod and note its resistance. If shock is frozen it will be much more difficult to compress than one in normal condition.
8. Renew if any faults are present.

HPG T/A Shock

1. Because of gas pressure, strong resistance is felt when compressing shock.
2. To inspect shock operation, or if suspecting an internal leak between oil chamber and gas chamber, check shock as follows:
3. Install shock in a vise clamping on its bottom eyelet with its rod upward. Verify the compression stroke when the rod is fully extended.
4. Completely push down the shock rod then release.
5. The shock should extend unassisted. Rod must come out at a steady speed. If speed suddenly increases particularly at end of extension, replace shock.
6. If suspecting a shock is freezing, place shock in a freezer (temperature below 0°C (32°F)) for 4 hours.

www.midwestmanuals.com

7. Push down on rod and note its resistance. If shock is frozen it will be much more difficult to compress than one in normal condition.
8. Repair or replace if any faults are present.

Shock Absorber Rebuilt Procedure (HPG T/A)

There are two types of high pressure gas take apart (HPG T/A) shock. One type has a tire valve and the other has a needle valve.

SHOCK TYPE	INFLATION TOOL
Tire valve type	529 035 570
Needle valve type	503 190 102

HPG T/A shocks come in two sizes. C-36 shock is 36 mm (1.417 in) in diameter and C-46 shock is 46 mm (1.811 in).

SHOCK SIZE	SERVICING TOOL	P/N
C-36	Piston guide	529 026 600
	Seal guide	529 026 500
	Shock wrench	529 035 727
C-46	Piston guide	529 035 608
	Seal guide	529 035 728
	Shock wrench	529 035 727

1. Release nitrogen (N) pressure on any HPG T/A shock with internal floating piston (IFP).

⚠ WARNING

Nitrogen gas is under extreme pressure. Use caution when releasing this gas volume. Protective eye wear should be used.

2. Mount shock in a vise with the SHOCK RETAINER TOOL (P/N 529 035 769).

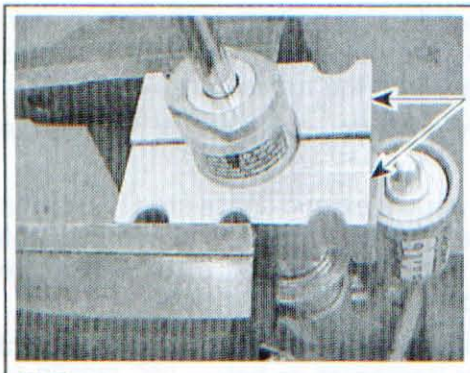

3. Remove screw on top of valve. Place the needle guide of GAS FILL TOOL KIT (P/N 503 190 102) on the shock valve. Press the detent pin and push forward the needle assembly very slowly towards rubber of needle valve. Push on shock tool valve center rod to release gas pressure.

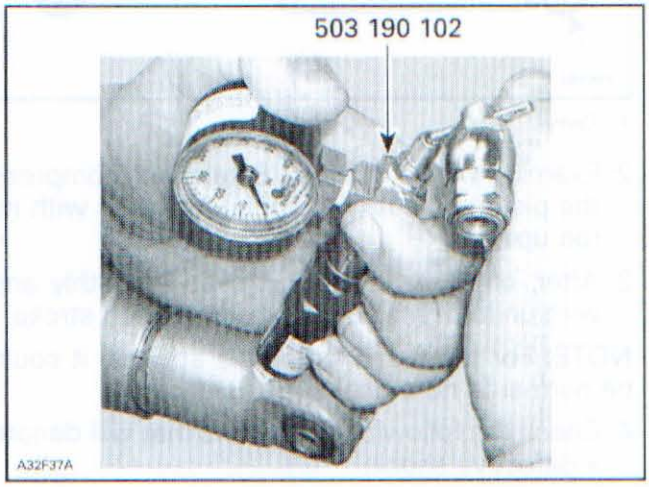

4. Remove tool from shock.

Screw Cap Type HPG T/A Shock

5. Using the SHOCK WRENCH (P/N 529 035 727), unscrew seal carrier.

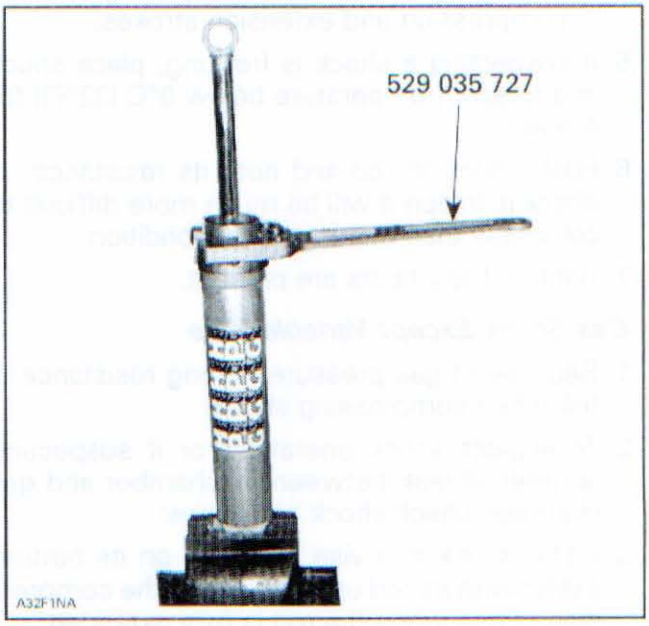

TYPICAL

Snap Ring Cap Type HPG T/A Shock

6. Using a flat tool (small screwdriver or small chisel), pop-out the cap.

www.midwestmanuals.com

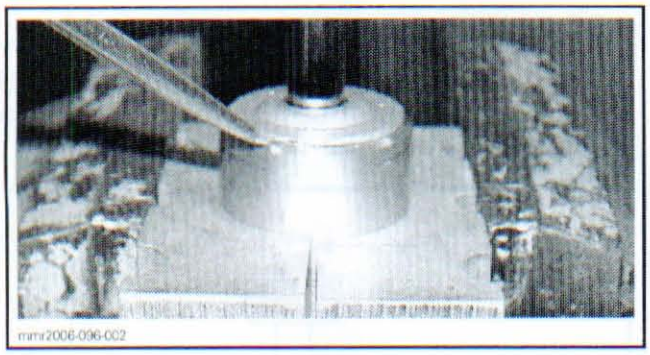

7. Compress the carrier to access and using a pick, remove the snap ring.

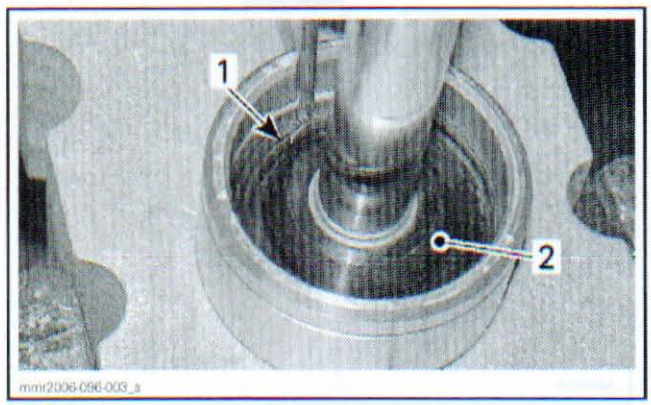

1. Snap ring
2. Carrier

All HPG T/A Shocks

8. With the seal carrier removed, slowly lift and remove damper rod assembly from the damper body.

NOTE: Remove damper rod assembly slowly to reduce oil spillage and prevent piston seal damage by damper body threads. Wrap the damper body with a shop cloth to capture possible overflow oil while removing the damper piston.

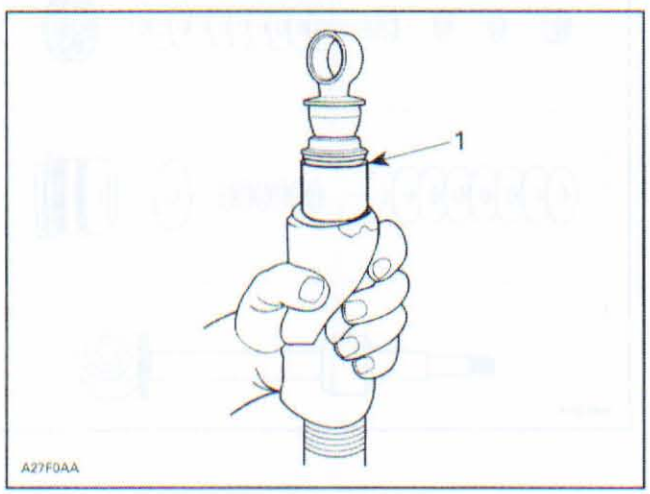

1. Oil flows

9. Discard old oil into storage container. Never reuse damper oil during shock rebuild.

HPG T/A Shock without Remote Reservoir

10. Remove valve core.
11. Place shock absorber in a position where opened extremity is blocked.
12. Using compressed air pressure, carefully remove floating piston from damper body. Hold shop cloth over damper body opening to catch released floating piston. Allow room for floating piston to leave damper body.

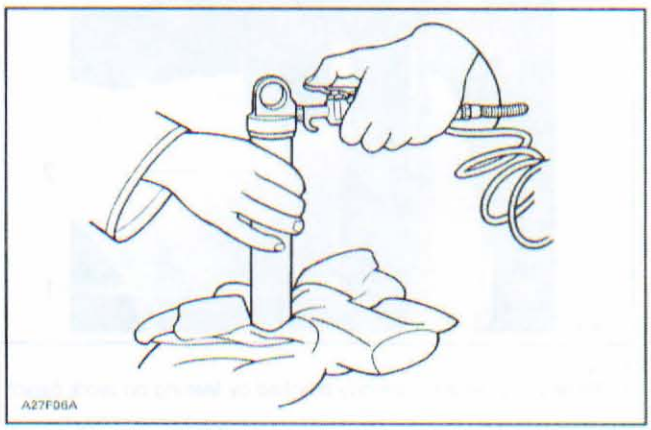

TYPICAL

HPG T/A Shock with Remote Reservoir

13. Install the FLOATING PISTON PULLER (P/N 529 035 907) on shock absorber, as shown below.



1. Floating piston remover tool

www.midwestmanuals.com

14. Place shock absorber in a position where remote gas reservoir opened extremity is blocked. Refer to following photo.

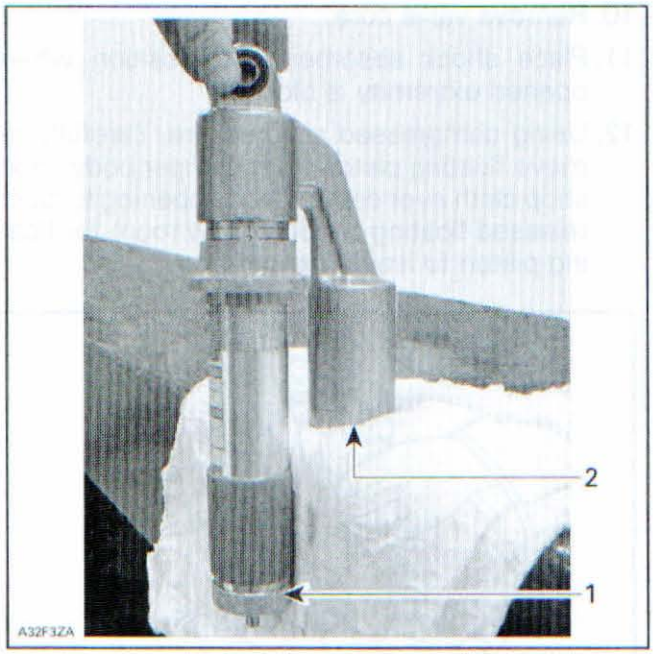

1. Tool
2. Reservoir opened extremity blocked by leaning on work bench

15. With the VACUUM PRESSURE PUMP (P/N 529 021 800), pressurize shock absorber until remote reservoir piston pops-out.



NOTE: Use towels to prevent damaging remote reservoir piston when it pops-out.

16. Thoroughly clean, with a typical cleaning solution, and blow dry using low pressure air. Carefully inspect the damper body for any imperfections or signs of wear in the damper bore.

17. Replace damper body if wear is identified.

All HPG T/A Shocks

18. Holding the damper rod assembly in a bench vise by the eyelet section, begin piston and valve removal.

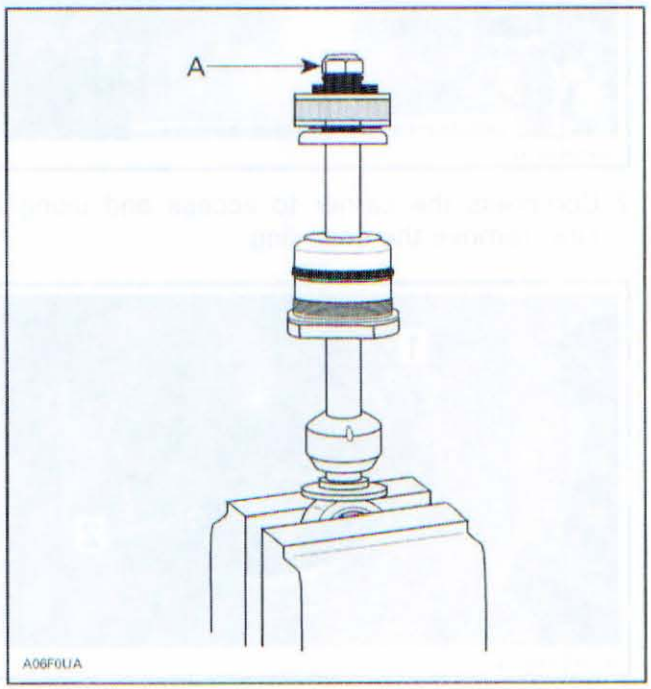

A. Remove damper rod nut

19. Always arrange parts removed in the sequence of disassembly.

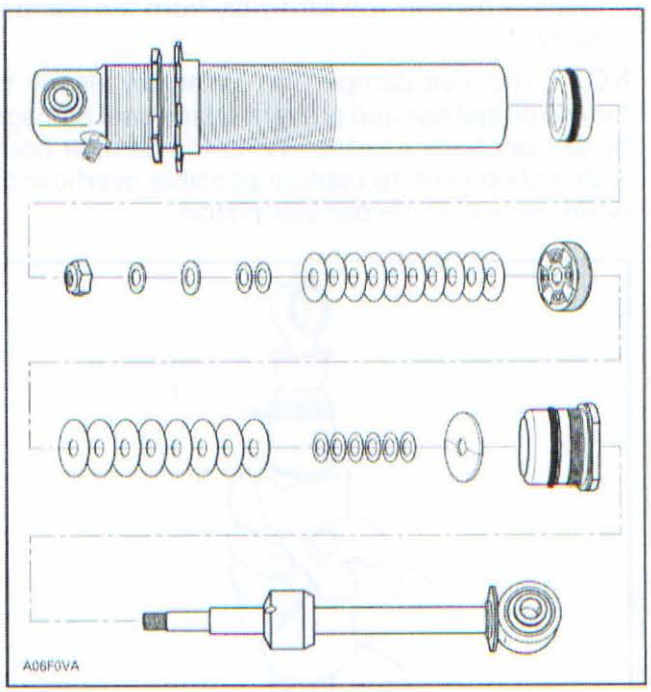

www.midwestmanuals.com

20. If revalving is to be done, it is imperative that you identify the original shim pack (size and number of shims). There is no need to remove seal carrier if only revalving is to be done.
21. Shims can be measured by using a vernier caliper or a micrometer.

NOTE: All shims should be carefully inspected and any bent or broken shims must be replaced for the shock to function properly.

22. After the new or replacement shim pack has been selected, reassemble in the reverse order of disassembly. Torque damper rod nut to 18 N•m (159 lbf•**in**).

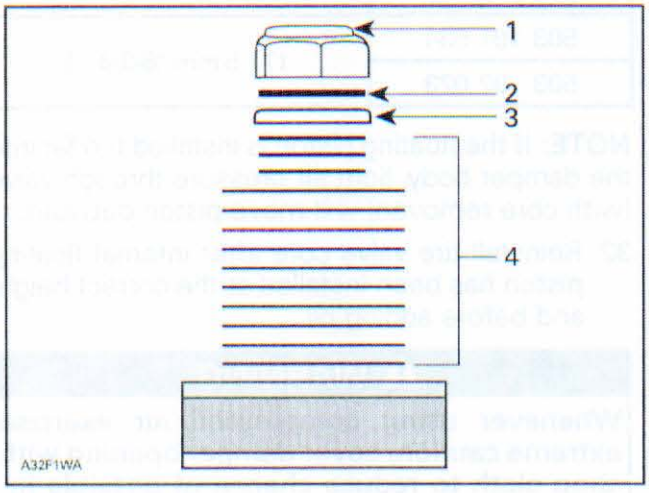

1. Damper rod nut
2. Spacer
3. Stopper with its round edge facing nut
4. Shim pack

23. As a general rule, we suggest replacing the damper rod nut after 4 rebuilds to ensure proper locking friction and the use of LOCTITE 271 (RED) (P/N 293 800 005) each time.

NOTICE Do not substitute the damper rod nut for non - O.E.M.

24. This (these) spacer washer(s) must be used as shown to ensure damper rod nut does not bottom out or contact shaft threads.
25. Rebound valve stopper with round edge facing nut.

NOTE: Rebound shim stack must not reach into threads of damper rod. Spacer under damper rod nut is used to prevent damper rod nut from bottoming on threads.

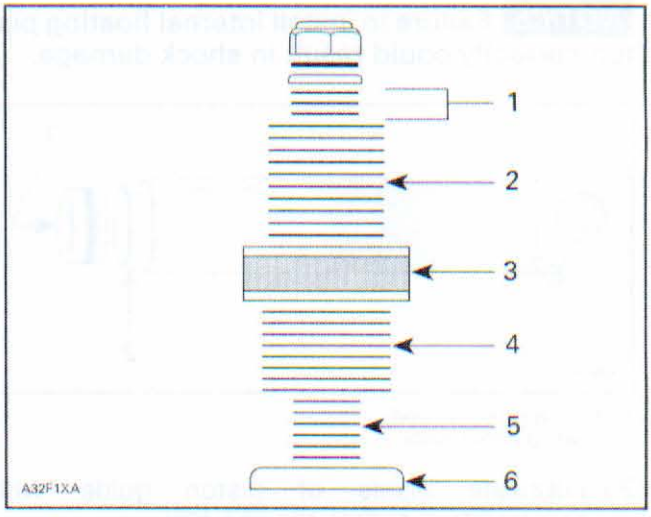

1. Rebound dampening shim pack
2. Rebound dampening shim pack
3. Piston
4. Compression dampening shim pack
5. Compression dampening shim pack
6. Stopper

26. If the seal carrier assembly is replaced, use seal pilot to guide seal over damper rod. Lubricate seal carrier guide pilot before use.

NOTICE Failure to use seal pilot will result in seal damage.

27. Reassemble damper rod assembly, taking care to properly assemble shim packs as required for your dampening needs. Ensure that the shaft piston is installed with the slits/larger intake holes facing the rebound shim stack.

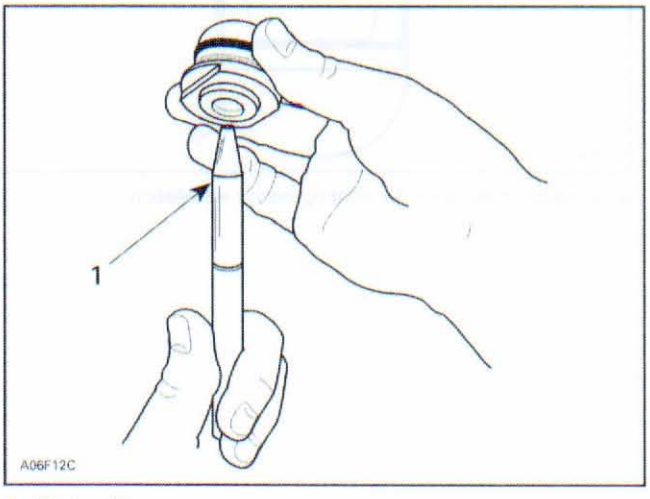

1. Seal guide

28. If internal floating piston has been removed, reinstall it into damper body (ensure that valve core has been removed). Use MOLYKOTE G-N (P/N 420 297 433) to ease O-ring past damper body threads with floating piston guide.

www.midwestmanuals.com

NOTICE Failure to install internal floating piston correctly could result in shock damage.

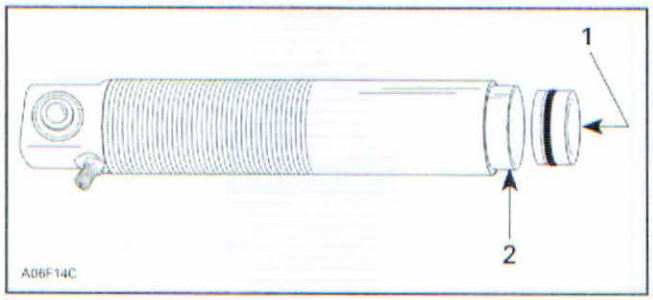

1. Push (slowly) by hand
2. Floating piston guide

29. Lubricate inside of piston guide with MOLYKOTE G-N (P/N 420 297 433).
30. Install floating piston to the proper depth refer to following the table.
31. On all HPG T/A shocks, the floating piston is installed hollow side up.

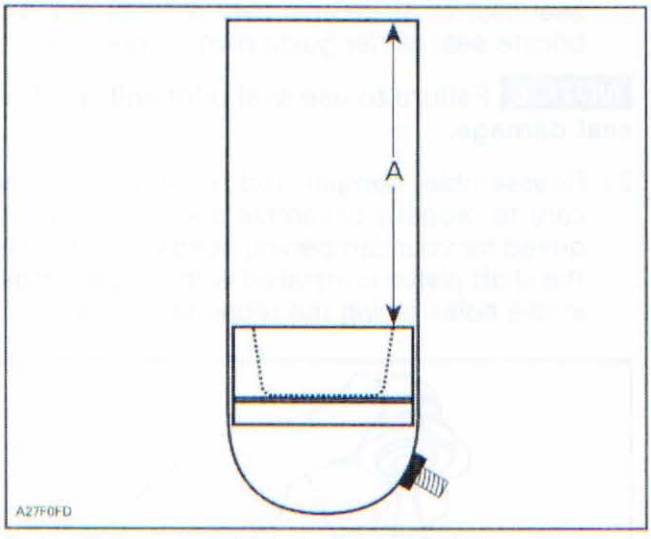

A. Installation distance for floating piston installation

SHOCK P/N	INSTALLATION DISTANCE OF FLOATING PISTON
503 192 024	54.5 mm (2-9/64 in)
503 192 025	
503 191 532	119.5 mm (4-11/16 in)
503 191 791	
503 191 797	
503 192 035	
503 192 678	164 mm (6-15/32 in)
505 071 991	167 mm (6-9/16 in)
505 072 232	
503 191 534	171.5 mm (6-3/4 in)
503 192 023	

NOTE: If the floating piston is installed too far into the damper body, light air pressure through valve (with core removed) will move piston outward.

32. Reinstall tire valve core after internal floating piston has been installed at the correct height and before adding oil.

⚠ WARNING

Whenever using compressed air exercise extreme caution, cover damper opening with shop cloth to reduce chance of possible injury.

NOTICE Moisture laden compressed air will contaminate the gas chamber and rust floating piston.

33. Fill the shock with SHOCK ABSORBER OIL (P/N 293 600 035) to approximately 10 mm (3/8 in), from the base of seal carrier threads.

www.midwestmanuals.com

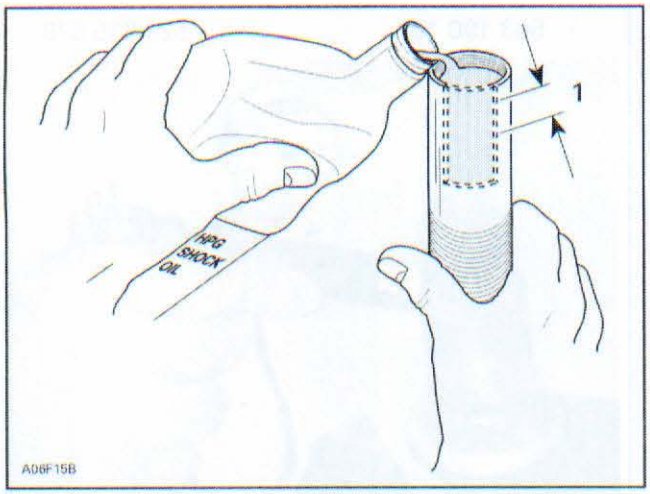

1. Fill to 10 mm (3/8 in)

NOTE: Although we do not measure the exact amount of oil added to the damper, approximately 252 ml (8.52 U.S. oz) will be used.

34. Carefully insert damper rod into the damper body. Lightly oil damper piston seal ring with shock oil to ease installation.

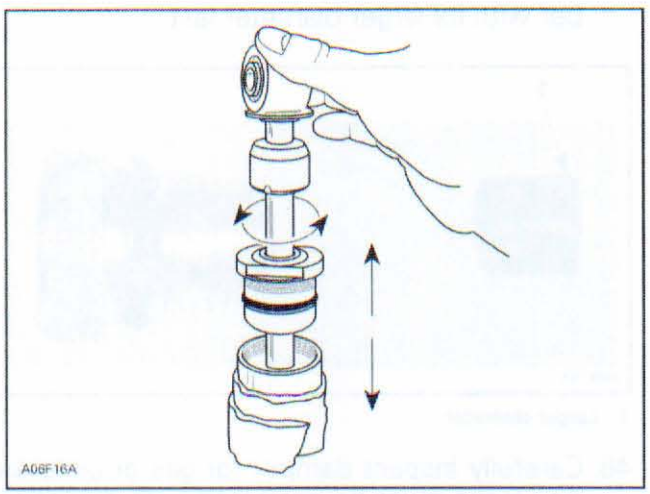

NOTE: Some shock oil will overflow when installing damper. Wrap damper with shop cloth to catch possible overflow oil.

NOTICE Use care when passing piston into damper body at damper body threads.

35. Slight oscillation of damper rod may be required to allow piston to enter damper body bore.
36. Slowly push piston into damper body. Slight up and down movement may be required on short stroke to allow all air to pass through piston assembly. The gentle tapping of a small wrench, on the shock eye, may help dislodge air trapped in the submersed piston. Be careful not to drive the shaft any deeper into the oil than is necessary to just cover the shim stack.

NOTE: Fast installation of the damper rod may displace the floating piston from its original position. This must not occur if the damper is expected to perform as designed.

37. With damper rod piston into oil, TOP OFF damper oil volume. Oil level should be to damper body thread base.

Screw Cap Type HPG T/A Shock

38. Seal carrier assembly can now be threaded into damper body. This should be done slowly to allow weapage of oil and to minimize internal floating piston displacement. Torque seal carrier to 65 N•m (48 lbf•ft).

NOTE: Some oil must overflow when installing the cap.

Snap Ring Cap Type HPG T/A Shock

39. Seal carrier assembly can now be pushed into damper body to pass snap ring groove. Install snap ring into groove.

NOTE: Some oil must overflow when the seal carrier is pushed down.

40. Tap the cap on the shock body.

All HPG T/A Shocks

41. After the seal carrier is fully in place avoid pushing the shaft into the body until the nitrogen charge is added.
42. When removing and retightening the tire valve acorn nut use minimal torque. When the cap is over tightened and subsequently removed it may prematurely break the seal of the tire valve to the shock body and cause a loss of nitrogen charge without being noticed. If you suspect this has happened then recharge the shock as a precaution. Inspect the tire valve cap before installation to ensure that the internal rubber gasket is in its proper position.
43. Nitrogen (N) can now be added to damper body.

www.midwestmanuals.com

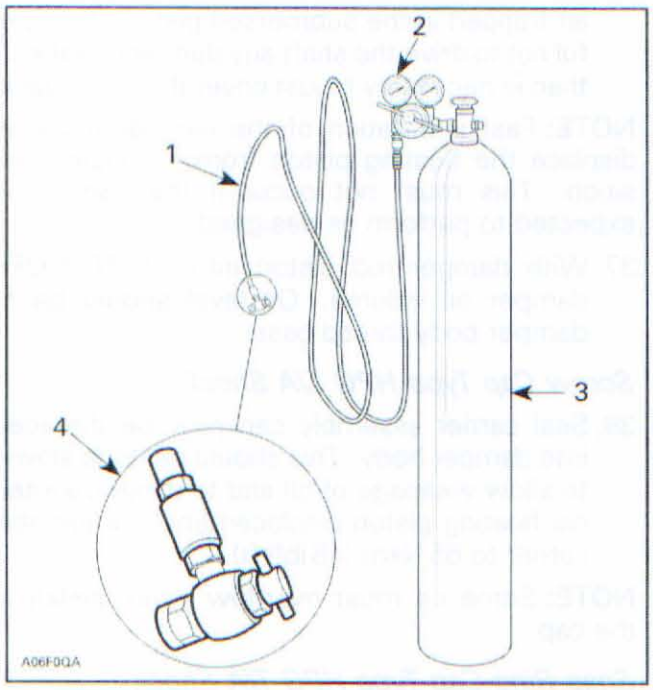

1. *High pressure hose*
2. *Stage regulator, delivery pressure range 2070 kPa (300 PSI)*
3. *High pressure cylinder filled with industrial grade nitrogen*
4. *Valve tip permanently installed*

NOTE: Never substitute another gas for nitrogen. Nitrogen has been selected for its inert qualities and will not contaminate the gas chamber of the shock.

44. Preset your pressure regulator to 2070 kPa (300 PSI) nitrogen (N), this gas pressure will restore the correct pressure for your damper.

NOTICE Do not exceed the recommended pressure values.

⚠ WARNING

Whenever working with high pressure gas, use eye wear protection. Never direct gas pressure toward anybody.

45. Install the GAS FILL TOOL KIT (P/N 503 190 102) on GAS SHOCK VALVE TOOL (TIRE VALVE TYPE) (P/N 529 035 570). Set the regulator pressure on the nitrogen cylinder as per the shock requirement.
46. Mount the shock on vise. Remove screw on top of valve. Place the needle guide of gas refill tool on the shock valve. While depressing the detent pin of the gas refill tool and pushing forward the needle assembly, insert the needle through the rubber core of the pressure valve assembly of the shock.

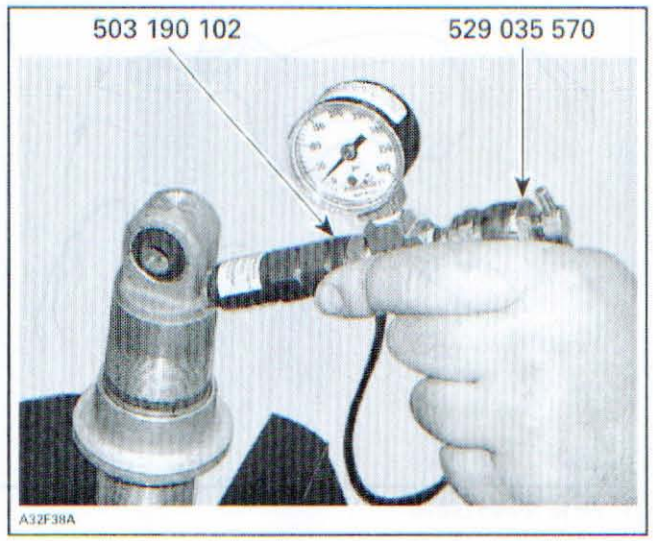

NOTE: For replacement of the needle or filling the shock, carefully follow the instructions provided with the GAS FILL TOOL KIT (P/N 503 190 102).

47. On some models, rubber may pop out of needle valve when inserting tool needle. If so, remove valve core and rubber then, reinstall rubber with its larger diameter last.

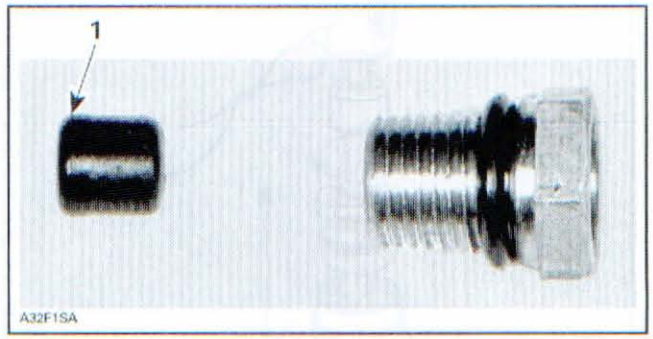

1. *Larger diameter*

48. Carefully inspect damper for gas or oil leaks. Any leaks must be corrected before continuing. If no leak is detected, install the screw on top of the valve and clean the shock with the PULLEY FLANGE CLEANER (P/N 413 711 809).
49. Damper gas pressure cannot be confirmed by using a pressure gauge. The volume of gas in the shock is very small, and the amount lost during gauge installation will lower the pressure too much and require refilling.
50. After recharging is complete the rebuilt shock should be bench-tested. Stroke the shock to ensure full travel and smooth compression and rebound action. If the shaft moves in or out erratically this could indicate too much air is trapped inside. If the shaft will not move or has partial travel then it may be hydraulically locked. In either event the shock must be

www.midwestmanuals.com

rebuilt again. Pay particular attention to the placement of the IFP, quantity of oil and shim stack/piston assembly.

Shock Absorber Rebuilt Procedure (HPG T/A Racing Clicker)

1. Tightly secure the shock base in vise. DO NOT CLAMP ONTO SHOCK BODY.
2. Using a 12 mm wrench, slowly remove air inlet valve, allowing the gas inside the reservoir to escape.
3. Remove top shock cover using a 36 mm wrench.

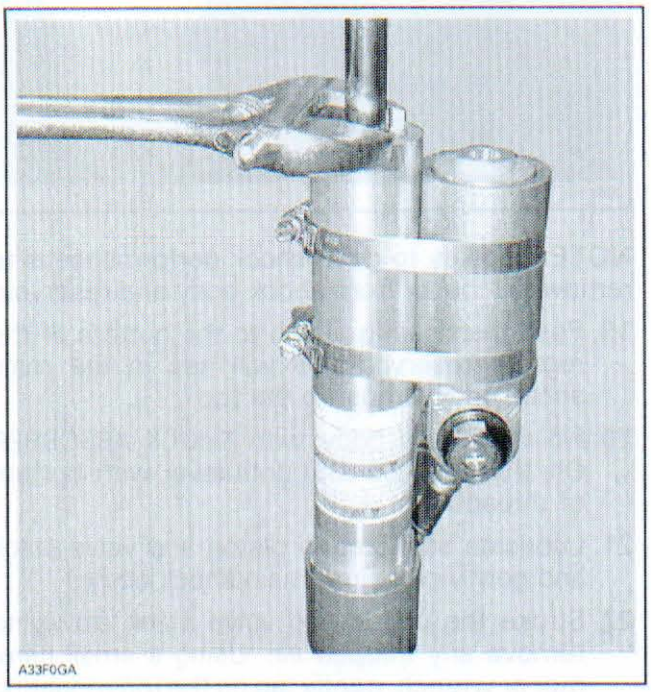
A33F0GA

4. Pull shock rod out of main shock body.
5. Drain oil from the shock body. Dispose of used oil properly.


A33F0MA

6. Push down the remote reservoir cover to remove the retaining circlip.

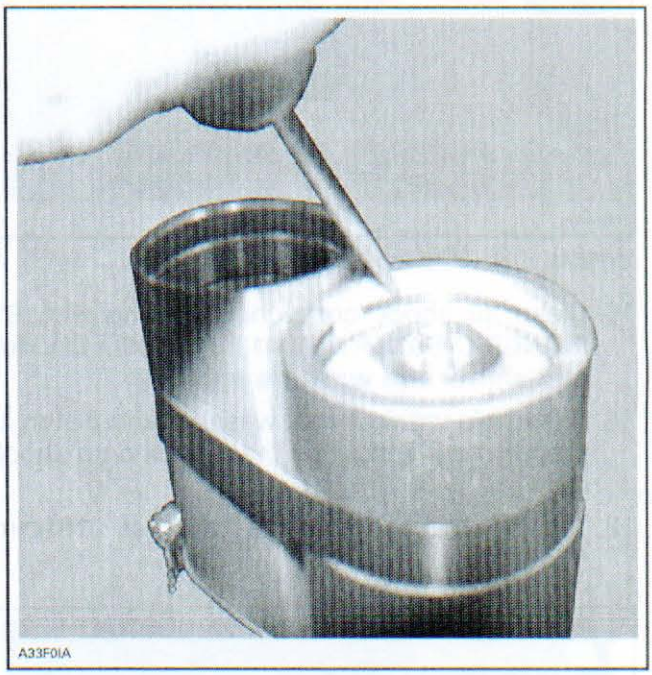
A33F0IA

7. Using the FLOATING PISTON PULLER (P/N 529 035 901), remove the remote reservoir cover then the floating piston inside the remote reservoir.

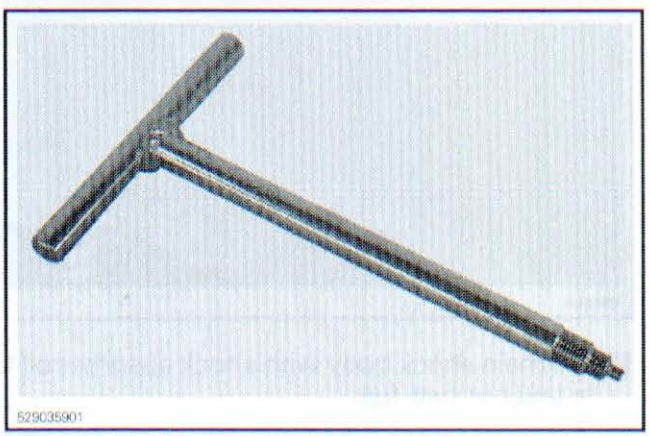
529035901

8. Using a 14 mm wrench, remove the lock nut securing shims, washers and piston to shock rod.
9. Carefully remove and layout shims, washers and piston from shock rod. Play close attention to shims and washers sequence and piston position.

www.midwestmanuals.com

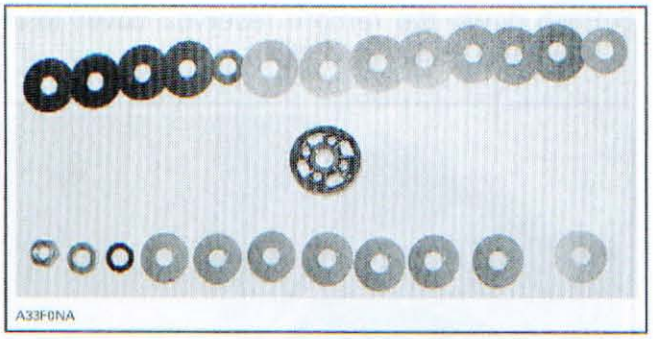
A33F0NA

TYPICAL

10. Clean all shock components using PULLEY FLANGE CLEANER (P/N 413 711 809). **Do not mix shims and washers together.**
11. Assemble valve shims, washers and piston in proper order and place them back onto shock rod.
12. Torque the shock rod nut at 18 N•m (159 lbf•**in**).

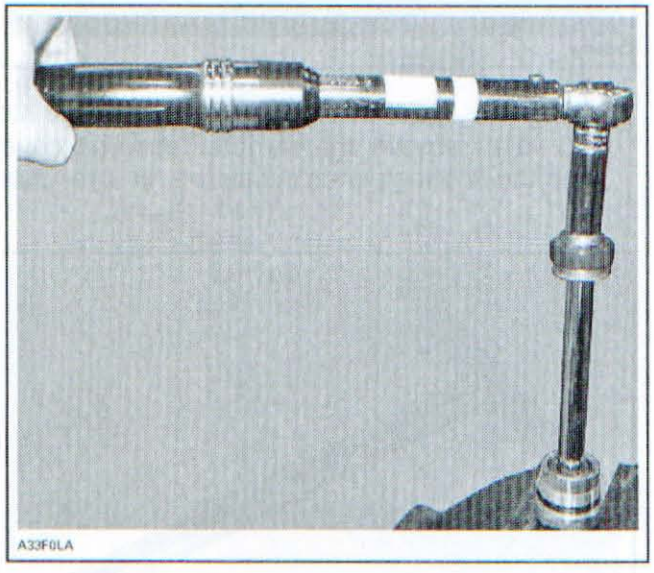
A33F0LA

13. Fill main shock body with shock absorber oil to a level of half full.
14. Fill also remote reservoir with shock absorber oil to within 6.4 mm (1/4 in) from the top.
15. Hold the remote reservoir in a way so the oil level in the shock and the remote reservoir are at the same height.
16. Cup your hand and place it over the remote reservoir. Pump with your hand to circulate oil through the shock and reservoir to remove any trapped air. Low speed adjuster must be open 1 turn minimum.
17. Fill the remote reservoir with shock absorber oil.
18. Lubricate the O-ring on floating piston with shock oil and install it.


A33F0KA

NOTE: The key to good shock performance is to remove all the air from shock body and reservoir.

19. Push the floating piston to the bottom of the remote reservoir. Oil will rise in the main shock body almost to the top.
20. Fill the shock body with SHOCK ABSORBER OIL (P/N 293 600 035) until level with bottom of threads.
21. Lubricate seal around piston and valve stack and gently push into main shock body.
22. Stroke the piston and valve stack slowly to remove any trapped air. Using a small hammer or wrench, gently tap on the rod mounting eyelet to help remove air.
23. Again, push the floating piston to the bottom of the remote reservoir.
24. Pull shock rod as far out as possible and replace the shock cover and torque to 65 N•m (48 lbf•ft). Oil must spill from the shock body before the seal cover O-ring seals the shock.
25. Lubricate the O-ring on remote reservoir cover with shock oil and install the remote reservoir cover.
26. Push down the cover and install the retaining circlip.
27. Using the FLOATING PISTON PULLER (P/N 529 035 901), pull the cover to seat it against the retaining circlip.

www.midwestmanuals.com

⚠ WARNING

Make sure the cover is firmly seated against the retaining circlip before filling with gas.

28. Install the air inlet valve.
29. Pressurize the shock at 2070 kPa (300 PSI) with nitrogen (N). Use the correct GAS FILL TOOL KIT (P/N 503 190 102).

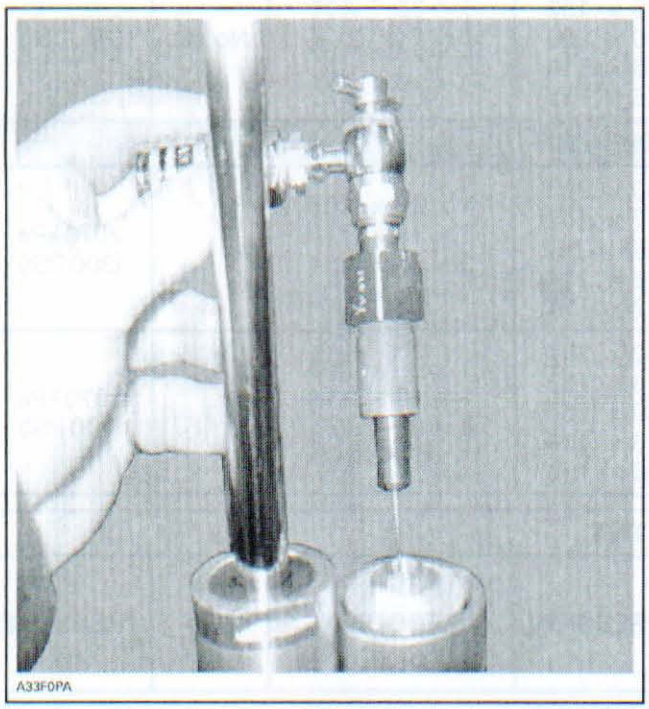

A33F0PA

30. Carefully inspect damper for gas or oil leaks. Any leaks must be corrected before continuing. If no leak is detected, install the safety screw into the air inlet valve and clean the shock with the PULLEY FLANGE CLEANER (P/N 413 711 809).
31. After recharging is complete, the rebuilt shock should be bench-tested. Stroke the shock to ensure full travel, smooth compression and rebound action. If the damper rod moves in or out erratically this could indicate air is trapped inside. If the damper rod will not move or has partial travel then it may be hydraulically locked. In either event the shock must be taken apart.

www.midwestmanuals.com

Shock Absorber Calibration Charts (HPG T/A)

MX Z RENEGADE X						
	BRP P/N	**INSTALLATION DISTANCE OF FLOATING PISTON (IFP)**	**COMPRESSION**	**REBOUND**	**SLIT**	**PRESSURE**
FRONT SUSPENSION						
FRONT	505 072 491 (Kayaba shock)	164 mm (6-15/32 in)	3 x 30 x .203 1 x 15 x .152 3 x 30 x .203 1 x 26 x .114 1 x 16 x .152	1 x 26 x .203 1 x 15 x .114 4 x 26 x .152 1 x 16 x .203	No slit	2070 kPa (300 PSI)
REAR SUSPENSION						
CENTER	503 192 797 (C-36 Kayaba shock)	119.5 mm (4-11/16 in)	2 x 30 x .203 1 x 17 x .152 10 x 30 x .152 1 x 26 x .114 1 x 22 x .114	1 x 26 x .203 1 x 15 x .114 3 x 26 x .254 1 x 16 x .203	1	2070 kPa (300 PSI)
REAR	503 192 025 (C-46 Kayaba shock)	54.5 mm (2-9/64 in)	5 x 30 x .254 1 x 15 x .152 4 x 30 x .254 1 x 26 x .114 1 x 16 x .152	1 x 26 x .203 1 x 16 x .114 4 x 26 x .254 1 x 16 x .203	1	2070 kPa (300 PSI)

MX Z TNT						
	BRP P/N	**INSTALLATION DISTANCE OF FLOATING PISTON (IFP)**	**COMPRESSION**	**REBOUND**	**SLIT**	**PRESSURE**
FRONT SUSPENSION						
FRONT	505 071 639 (Kayaba shock)	167 mm (6-9/16 in)	3 x 30 x .203 1 x 15 x .152 3 x 30 x .203 1 x 26 x .114 1 x 16 x .152	1 x 26 x .203 1 x 15 x .114 4 x 26 x .152 1 x 16 x .203	1	2070 kPa (300 PSI)
REAR SUSPENSION						
CENTER	503 191 791 (C-36 Kayaba shock)	119.5 mm (4-11/16 in)	2 x 30 x .203 1 x 14 x .152 6 x 30 x .152 1 x 26 x .114 1 x 18 x .114	1 x 26 x .203 1 x 15 x .114 3 x 26 x .254 1 x 16 x .203	1	2070 kPa (300 PSI)
REAR	503 192 023 (C-36 Kayaba shock)	171.5 mm (6-3/4 in)	7 x 30 x .203 1 x 17 x .152 4 x 30 x .203 1 x 26 x .114 1 x 16 x .152	1 x 26 x .203 1 x 16 x .114 4 x 26 x .254 1 x 16 x .203	1	2070 kPa (300 PSI)

www.midwestmanuals.com

MX Z X						
	BRP P/N	**INSTALLATION DISTANCE OF FLOATING PISTON (IFP)**	**COMPRESSION**	**REBOUND**	**SLIT**	**PRESSURE**
FRONT SUSPENSION						
FRONT	505 072 491 (Kayaba shock)	164 mm (6-15/32 in)	3 x 30 x .203 1 x 15 x .152 3 x 30 x .203 1 x 26 x .114 1 x 16 x .152	1 x 26 x .203 1 x 15 x .114 4 x 26 x .152 1 x 16 x .203	No slit	2070 kPa (300 PSI)
REAR SUSPENSION						
CENTER	503 191 791 (C-36 Kayaba shock)	119.5 mm (4-11/16 in)	2 x 30 x .203 1 x 14 x .152 6 x 30 x .152 1 x 26 x .114 1 x 18 x .114	1 x 26 x .203 1 x 15 x .114 3 x 26 x .254 1 x 16 x .203	1	2070 kPa (300 PSI)
REAR	503 192 024 (C-46 Kayaba shock)	54.5 mm (2-9/64 in)	3 x 30 x .203 1 x 30 x .152 1 x 15 x .152 2 x 30 x .203 1 x 30 x .152 1 x 26 x .114 1 x 16 x .152	1 x 26 x .203 1 x 16 x .114 5 x 26 x .254 1 x 16 x .203	1	2070 kPa (300 PSI)

Rear Shock Absorber Installation

The installation is the reverse of removal procedure. Pay attention to the following.

To ease shock installation, secure upper side of shock first.

For GTX SE models:

- Connect air hose on shock.
- Do not install shims between rear arm and throttle rods (upper shock fixation).
- Install shims on lower throttle rods fixation.

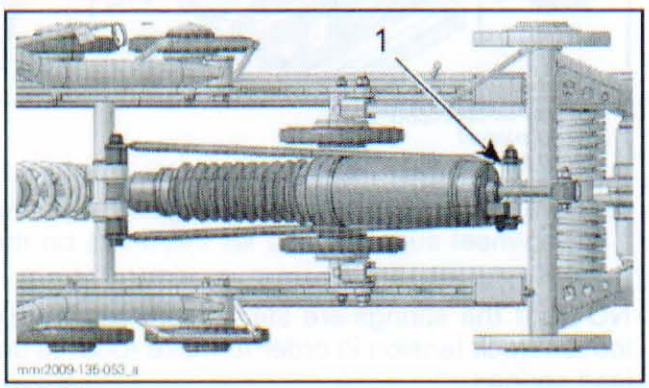

GTX SE
1. No shims here

NOTE: If the shock absorber has a remote reservoir, make sure to install the shock so that reservoir is facing down.

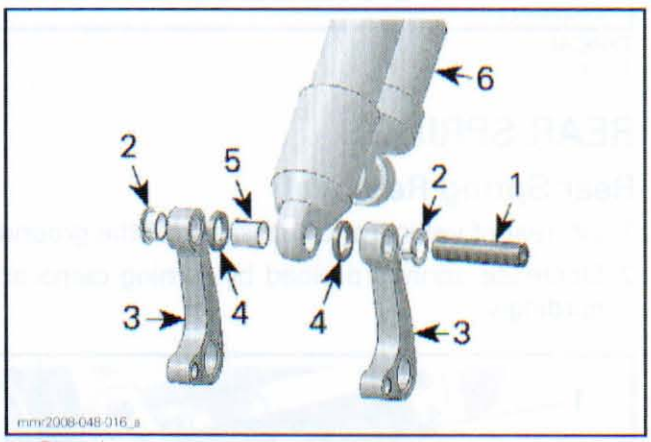

1. Bar axle
2. Bushings
3. Rocker arms
4. Plastic spacers
5. Inner sleeve
6. Reservoir position

Center Shock Absorber Installation

Installation is reverse of removal procedure. Pay attention to the following details.

1. Position the adjustment ring or the cam upwards and the valve towards the tunnel.

www.midwestmanuals.com

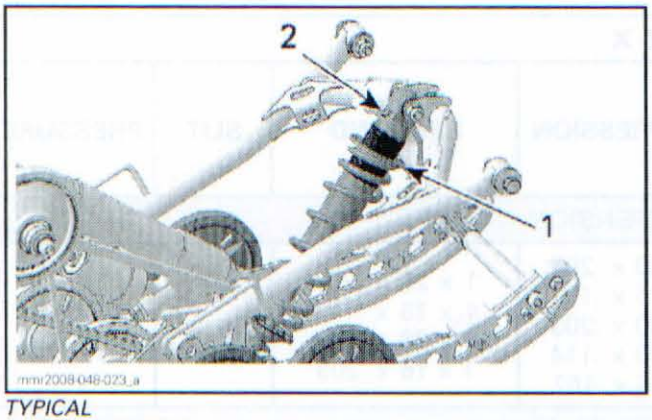

TYPICAL
1. *Adjustment ring*
2. *Valve*

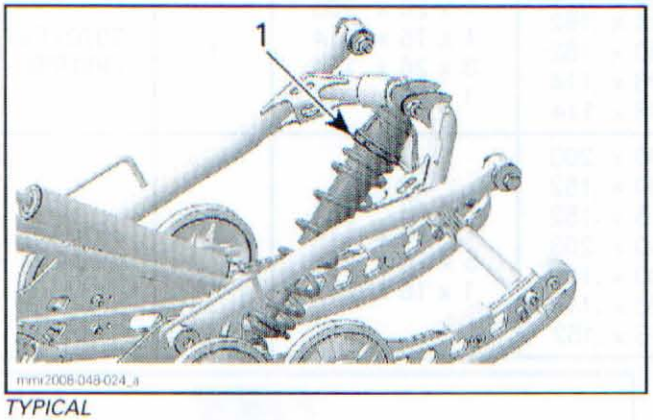

TYPICAL
1. *Cam*

REAR SPRINGS

Rear Spring Removal

1. Lift rear of vehicle and support it off the ground.
2. Decrease springs preload by turning cams accordingly.

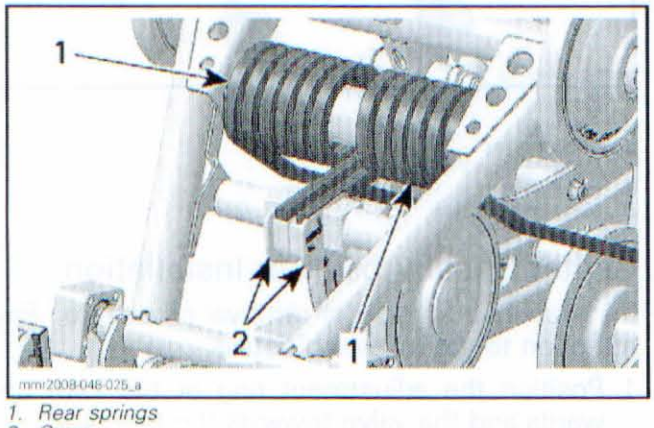

1. *Rear springs*
2. *Cams*

3. Remove idler wheels to have access to spring support screws.

IDLER WHEELS	
GSX AND MX Z (EXCEPT RENEGADE AND RENEGADE X)	External and internal idler wheels
GTX AND MX Z (RENEGADE AND RENEGADE X)	Internal idler wheels

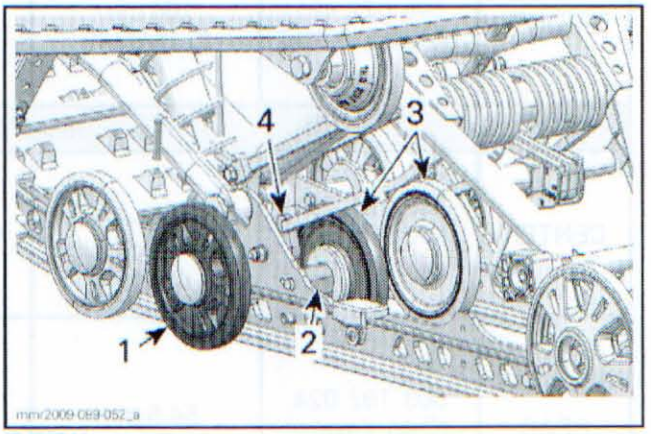

TYPICAL
1. *LH external idler wheel*
2. *Idler wheel support*
3. *Internal idler wheels*
4. *LH spring support*

4. Hold the spring supports firmly and remove spring support nuts.

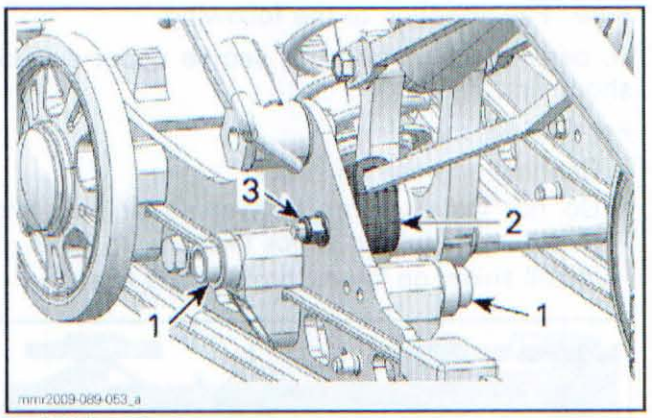

1. *LH idler wheel supports*
2. *Spring support*
3. *Spring support nut*

5. Move spring supports with spring ends over the idler wheel supports and let them sits on the track.

NOTE: If the springs are still loaded, completely loosen track tension in order to make room to unload springs.

6. Remove spring axle screws (one each side).

www.midwestmanuals.com

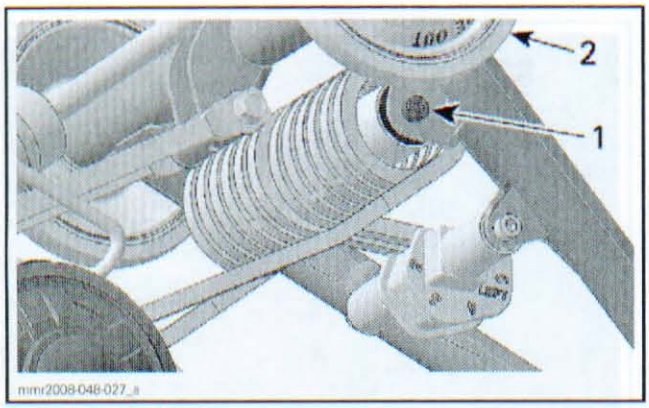

1. *Spring axle screw*
2. *Upper idler wheel*

7. Remove springs and spring axle.

Rear Spring Installation

Installation is reverse of removal procedure. Pay attention to the following.

1. Respect THIS SIDE OUT inscription on top idler wheels.
2. Make sure that spring end is in cam adjuster.

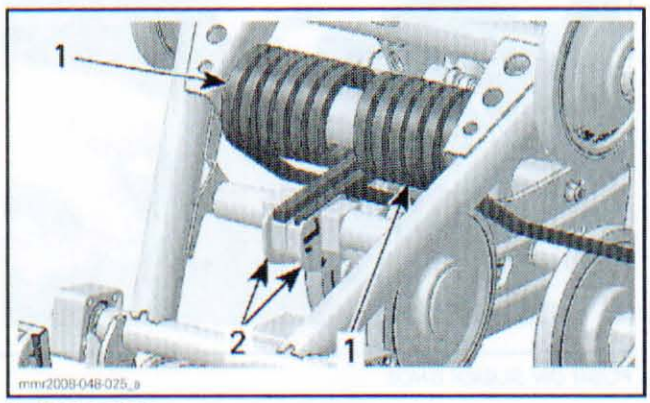

1. *Rear springs*
2. *Cams*

3. Install spring supports upwards.

GTX Series and MX Z (Renegade and Renegade X)

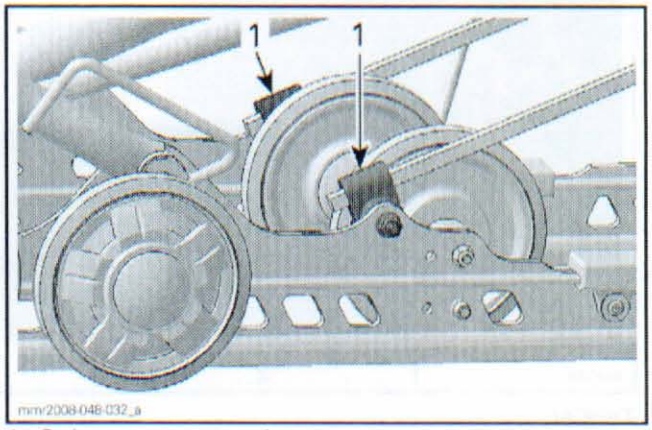

1. *Spring supports upwards*

GSX Series and All MX Z except Renegade and Renegade X

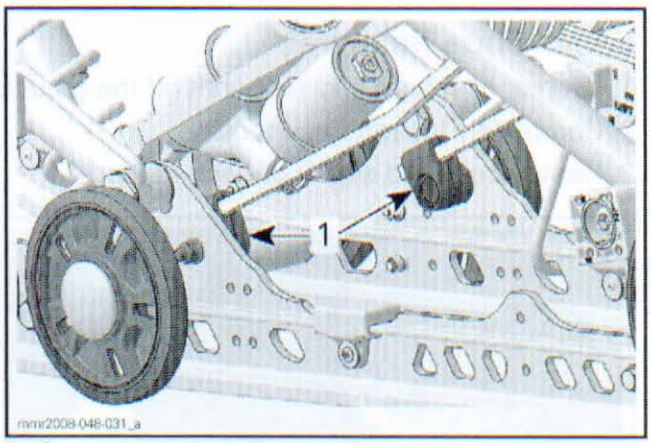

1. *Spring supports upwards*

SLIDER SHOES

Slider Shoe Inspection

Replace slider shoes when the wear reach 1 mm to 2 mm (.04 in to .08 in) beyond the moulding line.

www.midwestmanuals.com

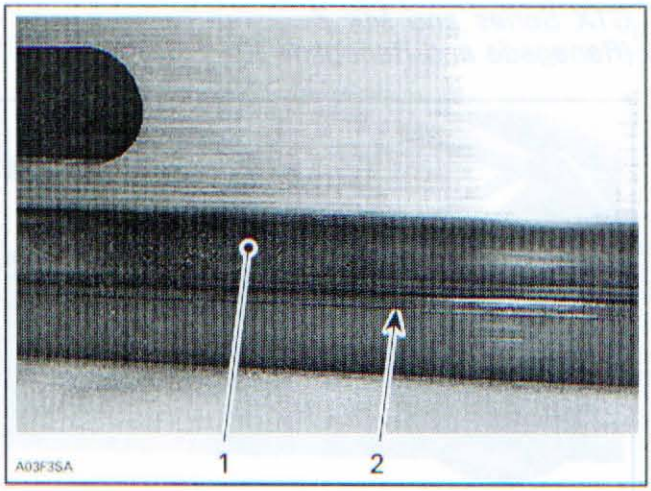

TYPICAL
1. *Slider shoe*
2. *Molding line*

NOTICE Slider shoes must always be replaced in pairs.

Slider Shoe Removal

1. Lift rear of vehicle and support it off the ground.
2. Completely loosen track tension.
3. Remove nut and screw of each runner.

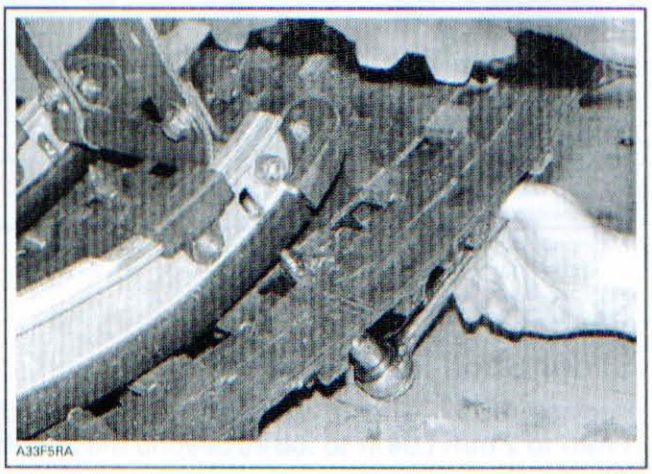

REMOVE NUT AND SCREW OF EACH RUNNER

4. At the rear of vehicle, align a track window with slider shoe.

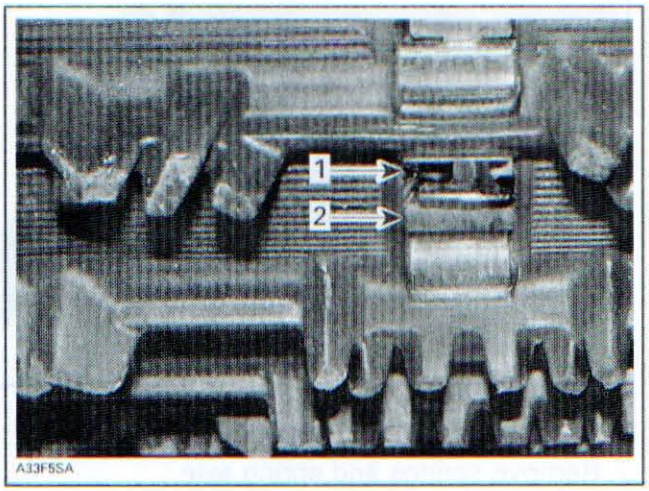

TYPICAL
1. *Track window*
2. *Slider shoe*

5. Using a pry bar or a screwdriver, push slider shoe rearward until it comes in contact with track.

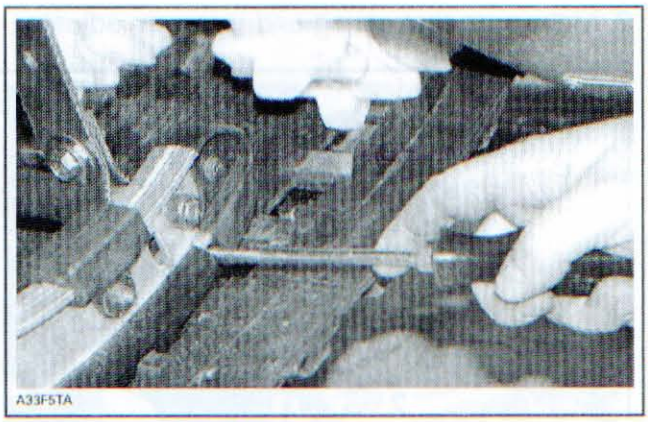

PUSH ON SLIDER SHOE

6. Using locking pliers, pull slider shoe through track window to remove.

NOTE: If necessary, lubricate track window to facilitate slider shoe removal.

www.midwestmanuals.com



PULL ON SLIDER SHOE TO REMOVE

Slider Shoe Installation

Installation is reverse of removal procedure. Pay attention to the following detail.

Make sure to insert slider shoe end with hole first.

FRONT ARM

Front Arm Removal

1. Remove *SUSPENSION ASSEMBLY*, see procedure in this subsection.
2. Unfasten stopper strap.

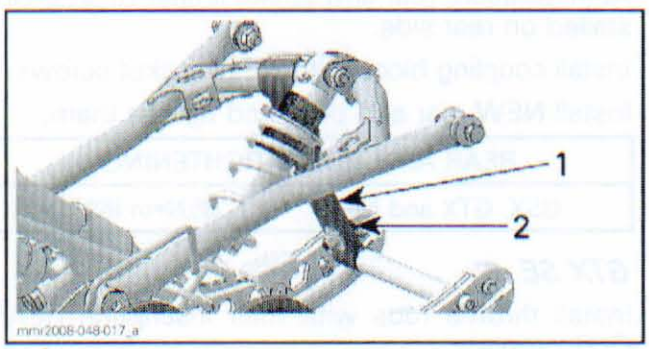

1. *Stopper strap*
2. *Stopper strap bolt*

3. Remove upper bolt securing the front shock absorber.

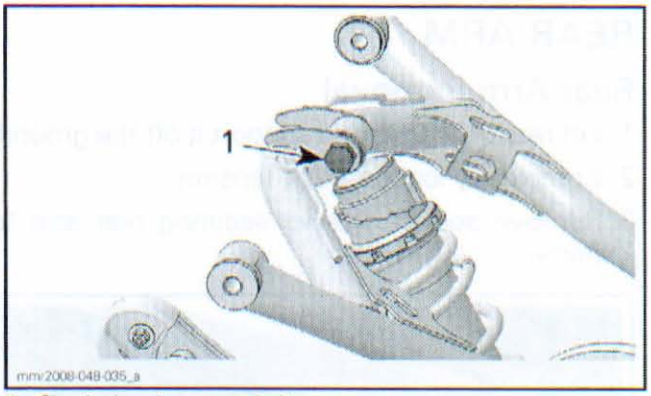

1. *Shock absorber upper bolt*

4. Unscrew bolts securing the bottom ends of front arm.

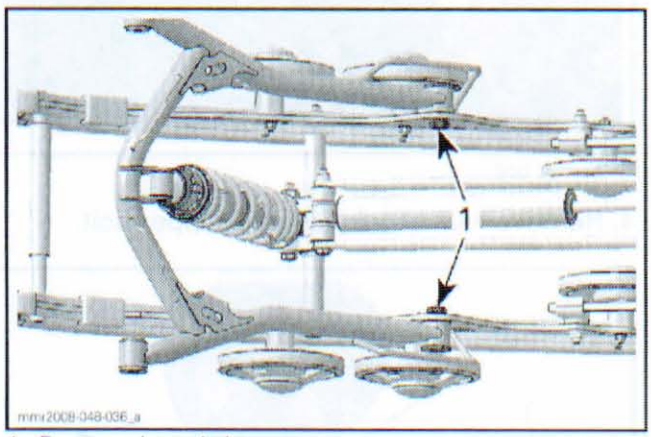

1. *Front arm lower bolts*

Front Arm Installation

Installation is reverse of removal procedure. Pay attention to the following details.

1. Install the lower bolts and tighten axles to 125 N•m (92 lbf•ft).

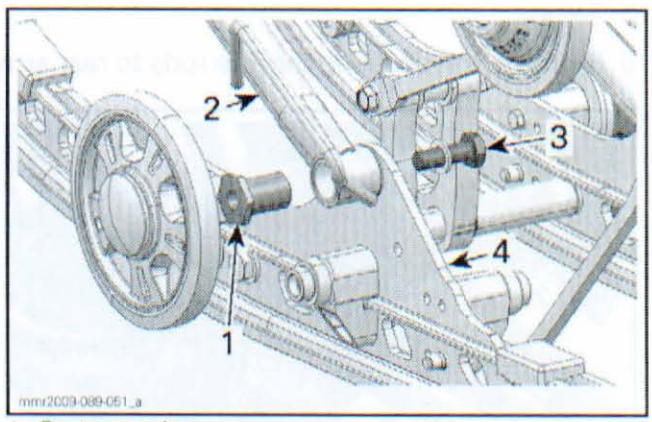

1. *Front arm axle*
2. *Front arm*
3. *Front arm lower bolt*
4. *LH runner*

2. Install all other removed parts accordingly with their installation procedures.

www.midwestmanuals.com

REAR ARM

Rear Arm Removal

1. Lift rear of vehicle and support it off the ground.
2. Completely loosen track tension.
3. Remove socket screws securing rear arm to frame.

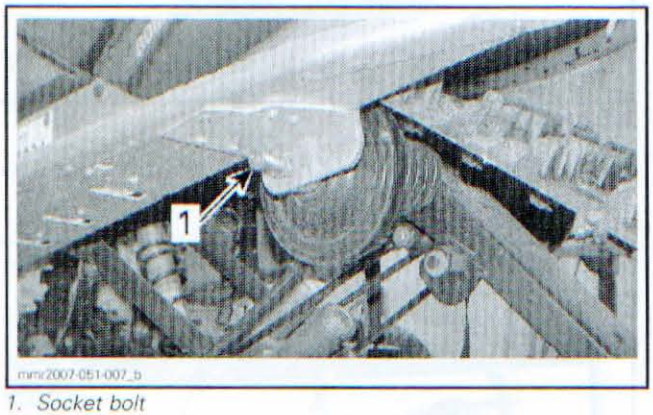

1. Socket bolt

4. Remove rear shock absorber upper bolt.

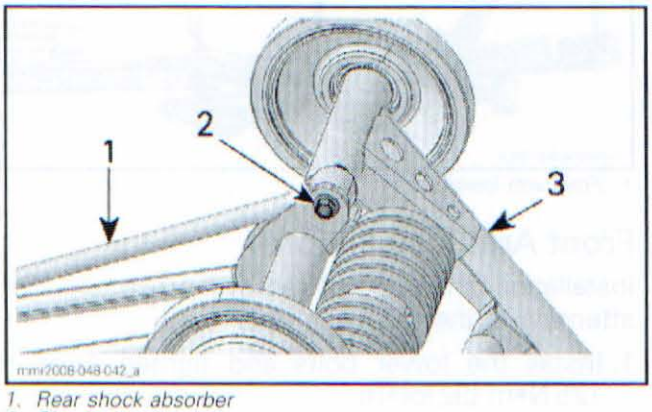

1. Rear shock absorber
2. Shock absorber bolt
3. Rear arm

5. Remove bolt securing throttle rods to rear arm.

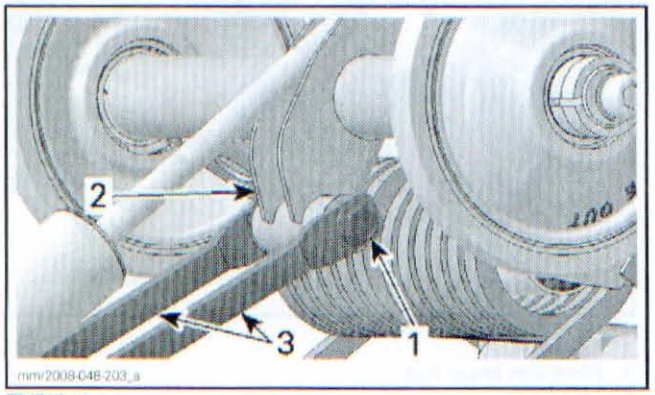

TYPICAL
1. Throttle rod bolt
2. Rear arm
3. Throttle rods

6. Remove *REAR SPRING*, see procedure in this subsection.
7. Remove and discard coupling block screws securing rear arm to pivot arm.

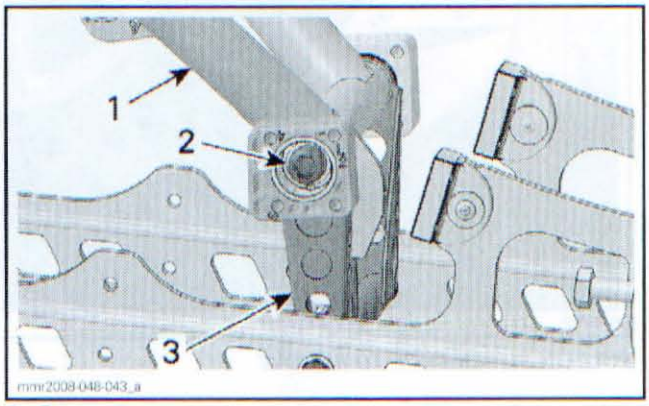

1. Rear arm
2. LH coupling block bolt
3. Pivot arm

8. Remove rear arm.

Rear Arm Installation

All Models

Installation is the reverse of removal procedure. Pay attention to the following details.

Pivot arm grease fitting must be installed towards the front of the vehicle.

At installation, rear arm stroke limiter must be installed on rear side.

Install coupling block with **NEW** socket screws.

Install **NEW** rear arm bolts and tighten them.

REAR ARM BOLTS TIGHTENING	
GSX, GTX and MX Z	85 N•m (63 lbf•ft)

GTX SE

Install throttle rods with their inscription REAR OUT properly.

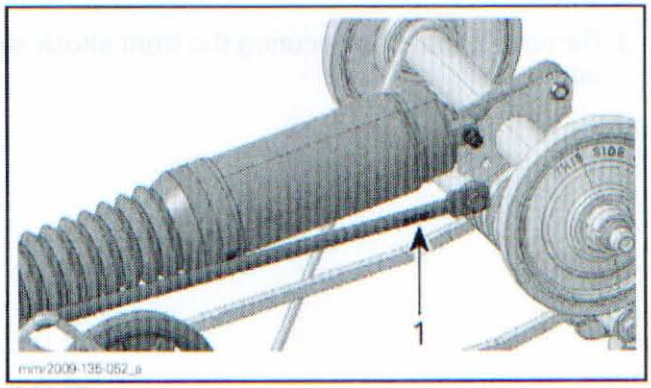

GTX SE
1. REAR OUT inscription

www.midwestmanuals.com

Do not install shims between rear arm and throttle rods (upper shock fixation).

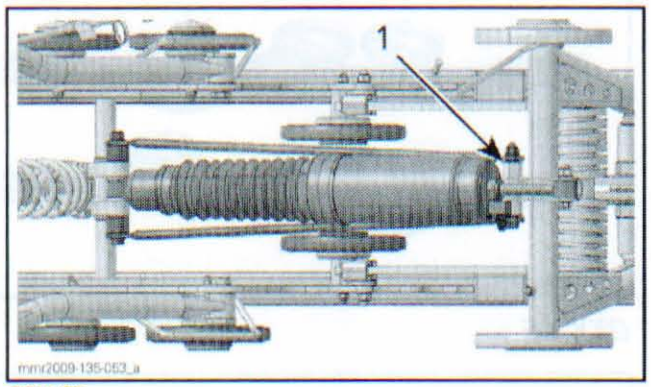

GTX SE
1. No shims here

Rear Arm Lubrication

Lubricate pivot arm and rear arm at grease fittings using SUSPENSION GREASE (P/N 293 550 033).

GSX Series and MX Z (TNT, X)

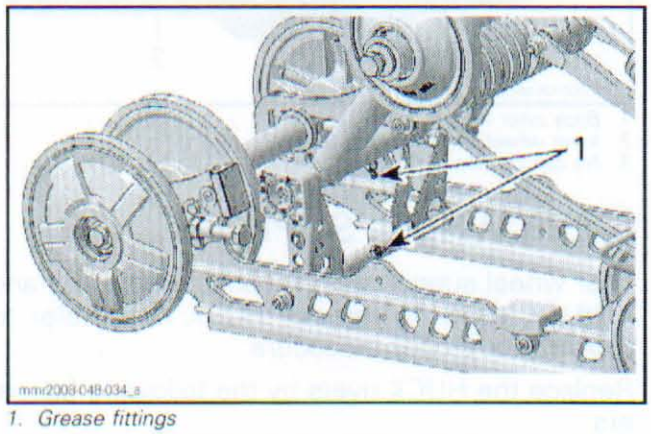

1. Grease fittings

GTX Series and MX Z (Renegade, Renegade X)

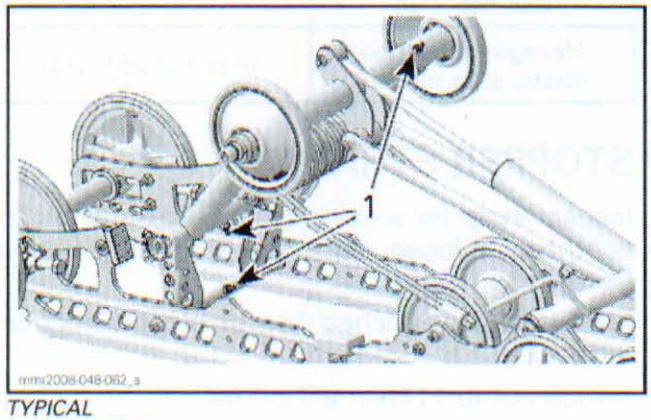

TYPICAL
1. Grease fittings

PIVOT ARM

Pivot Arm Removal

1. Lift rear of vehicle and support it off the ground.
2. Completely loosen track tension.
3. Remove and discard coupling block screws securing rear arm to pivot arm.

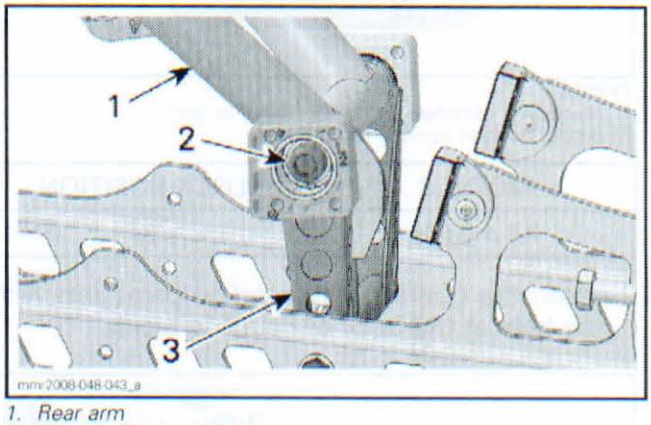

1. Rear arm
2. LH coupling block bolt
3. Pivot arm

4. Remove bolts and washers holding pivot arm to runners.

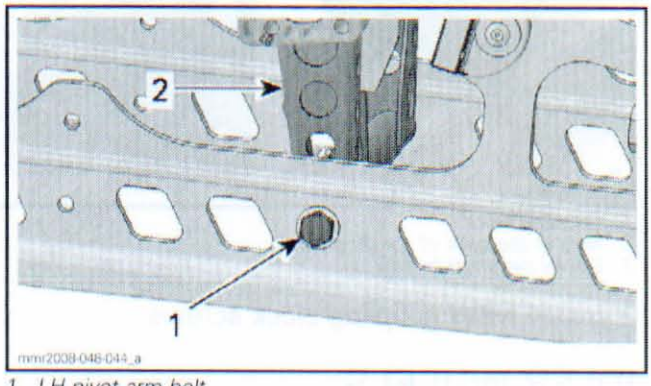

1. LH pivot arm bolt
2. Pivot arm

5. Separate pivot arm from rear arm.

Pivot Arm Installation

The installation is the reverse of the removal procedure.

COUPLING BLOCKS

1. Both coupling blocks are identified "R" or "L" (right or left) and have position number (from 1 to 4). At installation make sure to install proper block on proper side with the same adjustment position on both sides.

www.midwestmanuals.com

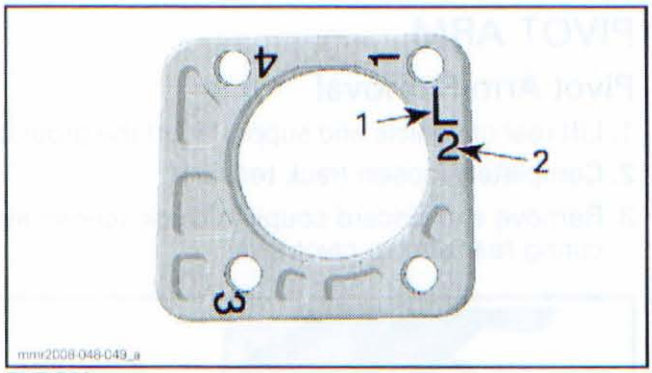

TYPICAL
1. *Blocks are identified "R" or "L" (right or left)*
2. *Blocks position number (from 1 to 4)*

MODELS	BLOCK POSITION
All models	2

2. Insert the dowel pin located on pivot arm with the hole at the back of coupling block.

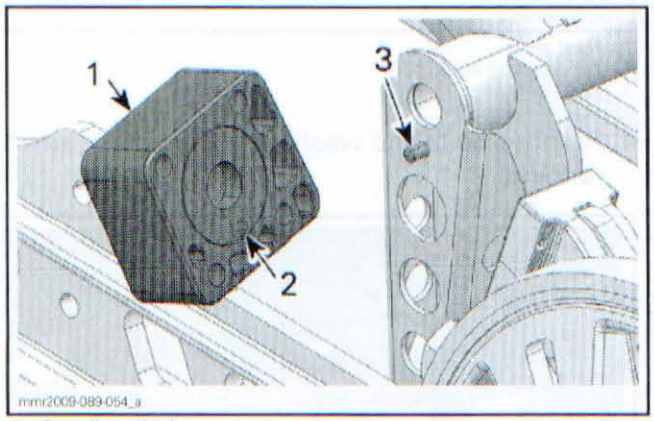

1. *Coupling block*
2. *Hole at the back of coupling block*
3. *Dowel pin on pivot arm*

3. Install **NEW** coupling block screws.

IDLER WHEELS

Refer to illustration for idler wheels position at installation.

GSX Series and MX Z (TNT, X)

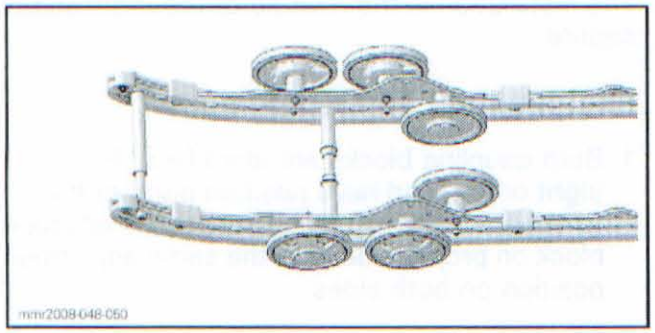

GTX LE and MX Z (Renegade, Renegade X)

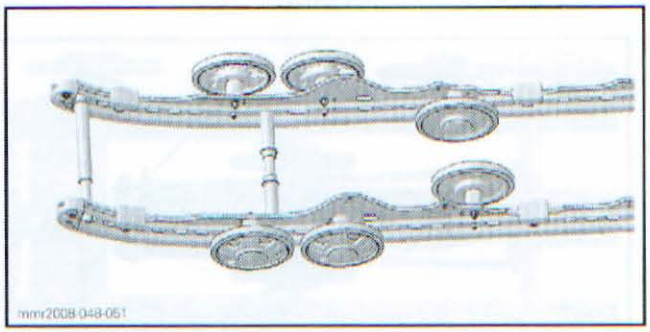

GTX SE

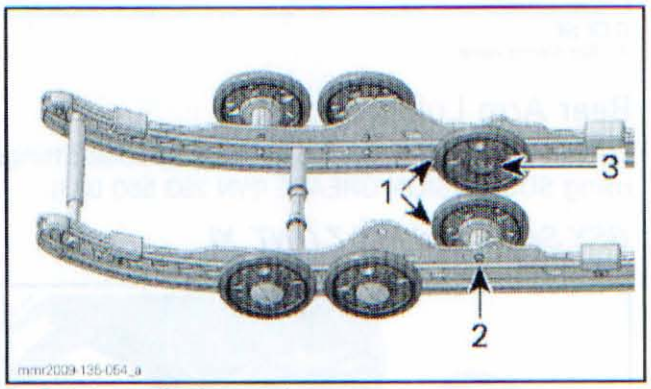

1. *Both inner wheels toward rear*
2. *Inner wheel bolt toward outside*
3. *No cap on inner wheel*

IDLER WHEEL SUPPORT

Idler wheel supports are retained with a bolt and a HUCK rivet. To remove HUCK rivet, refer to *FRAME* for proper procedure.

Replace the HUCK rivets by the following fasteners.

NEW FASTENERS	
Hexagonal flanged bolt M6 x 25	(P/N 207 662 544)
Hexagonal flanged elastic stop nut M6	(P/N 233 261 414)

STOPPER STRAP

Inspect strap for wear or cracks, bolt and nut for tightness. If loose, inspect hole for deformation. Replace as required.

Make sure it is attached through proper hole from the end.

Torque nut to 11 N•m (97 lbf•**in**).

www.midwestmanuals.com

GSX, GTX and MX Z

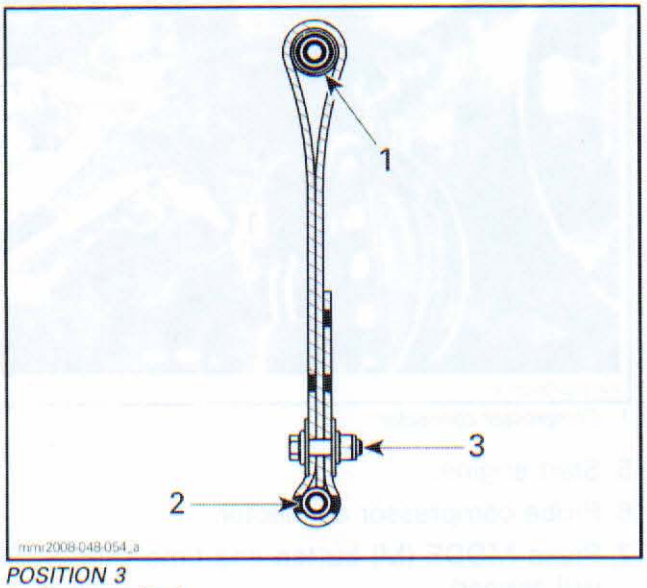

POSITION 3
1. *Front arm (top)*
2. *Front axle*
3. *Towards the rear of vehicle*

ACS COMPRESSOR

⚠ WARNING

The ACS suspension system may be under high pressure (up to 8 bar (120 PSI)). Release air pressure prior to working on the system. Refer to *ACS SYSTEM AIR PRESSURE RELEASE* in this subsection.

ACS System Air Pressure Release

1. Start vehicle.
2. Press MODE (M) button one time (AIR_SUSP will appear).
3. Set suspension mode to 1 using the heated throttle lever switch.

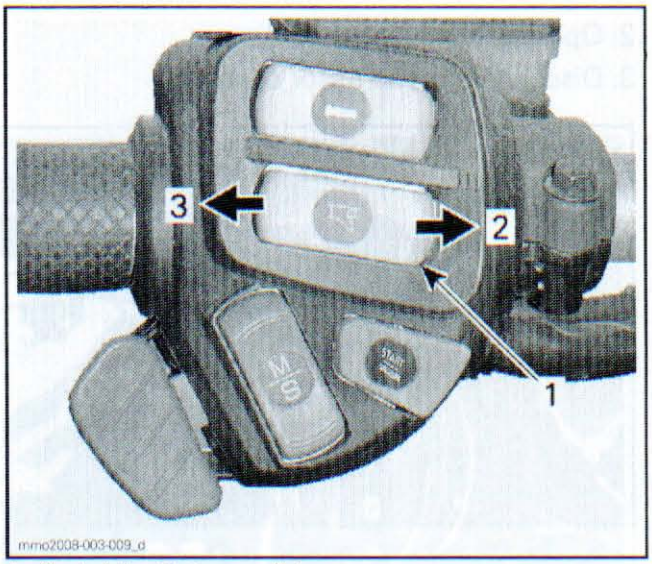

1. *Heated throttle lever switch*
2. *Increase pressure*
3. *Decrease pressure*

4. Wait until the actual setting shows 1 (lower display).

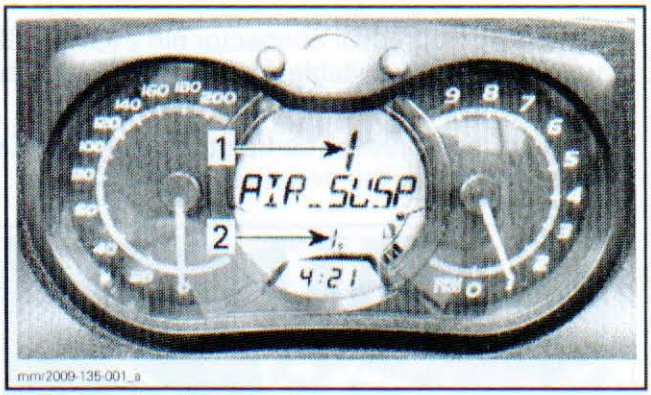

1. *Requested setting (set point)*
2. *Actual setting (pressure transducer reading)*

NOTE: Make sure to wait enough time in order to let the system expel the air. If the actual setting (lower display) never show 1, the system will still be pressurized. In this case, apply 12 Vdc on ACS solenoid valve connector in order to activate it and let the pressure drop.

5. Stop vehicle.

ACS Compressor Operation Test

NOTICE Do not power the compressor directly with the battery for more than 10 seconds. Apply voltage quickly to ensure that the compressor will not over pressurized the ACS system. Respect 1 minute cool down between tests.

1. Release air pressure, refer to *ACS SYSTEM AIR PRESSURE RELEASE* in this subsection.

www.midwestmanuals.com

2. Open LH side panel.
3. Disconnect compressor connector.

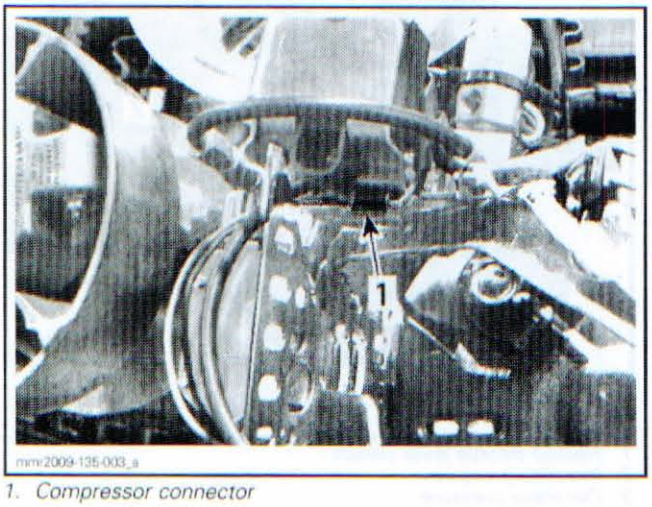

1. Compressor connector

NOTICE **Be careful not to power the module by the compressor connector in order to avoid to damage it permanently.**

4. Connect compressor connector pin 2 (ORANGE wire) to a 20 A suitable fuse jumper and then directly to the positive battery post.
5. Connect compressor connector pin 1 (BLACK wire) directly to the negative battery post.

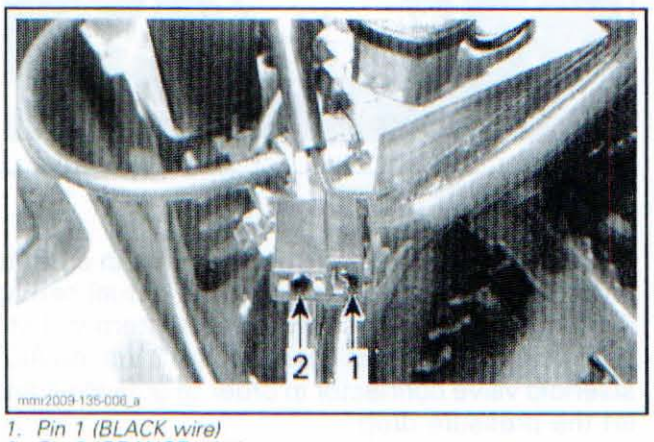

1. Pin 1 (BLACK wire)
2. Pin 2 (ORANGE wire)

6. Verify if compressor works properly.

ACS Compressor Input Voltage Test

1. Release air pressure, refer to *ACS SYSTEM AIR PRESSURE RELEASE* in this subsection.
2. Set the FLUKE 115 DIGITAL MULTIMETER (P/N 529 035 868) to Vdc.
3. Open LH side panel.
4. Disconnect compressor connector.

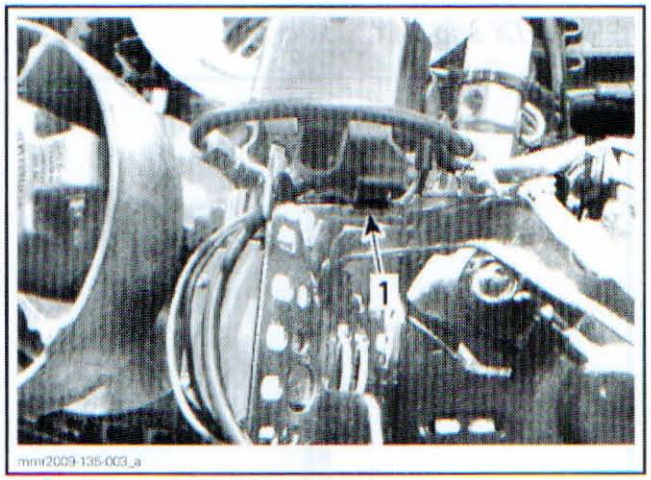

1. Compressor connector

5. Start engine.
6. Probe compressor connector.
7. Press MODE (M) button one time (AIR_SUSP will appear).
8. Set suspension mode to 2 using the heated throttle lever switch.
9. Measure voltage between compressor connector terminals as per the following table.

TEST PROBES	VOLTAGE
Pin 2 (OR)	Battery voltage (± 12 Vdc)
Pin 1 (BK)	

Check Valve Leak Test (ACS Compressor)

1. Release air pressure, refer to *ACS SYSTEM AIR PRESSURE RELEASE* in this subsection.
2. Remove LH side panel.
3. Disconnect inlet hose from manifold air fitting as follows:
   - 3.1 Push fitting ring toward manifold.
   - 3.2 Hold ring in place.
   - 3.3 Pull air hose.

www.midwestmanuals.com

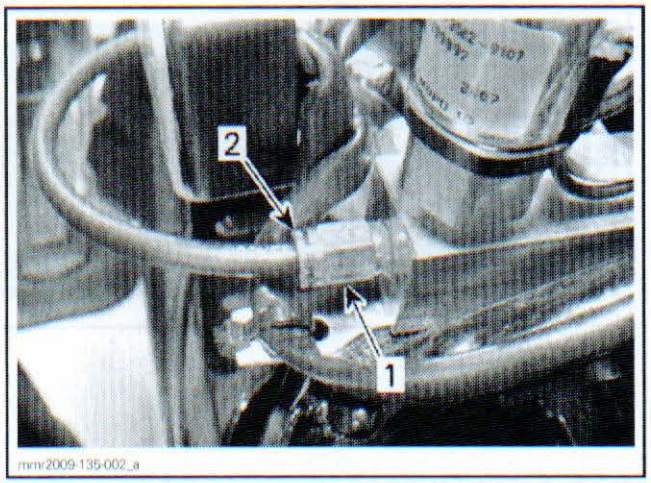

1. Inlet hose fitting
2. Ring

4. Use the ENGINE LEAK DOWN TEST KIT (P/N 529 035 661).

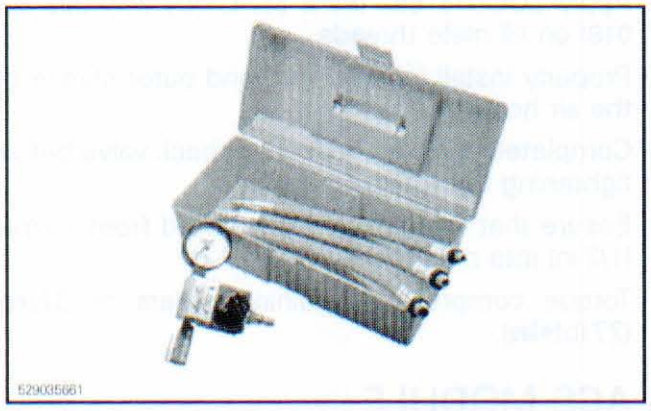

5. Connect workshop air supply into engine leak down test kit.

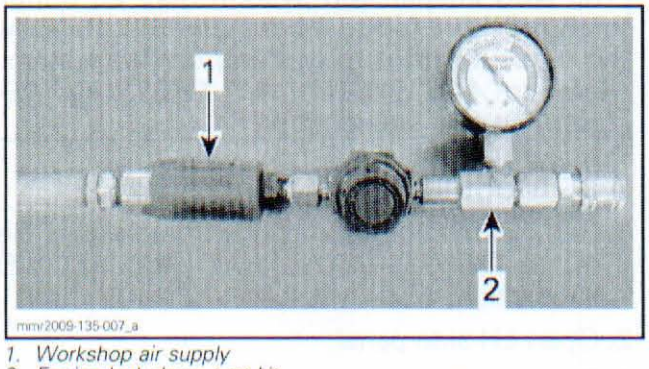

1. Workshop air supply
2. Engine leak down test kit

6. Adjust engine leak down test kit reading to 0 using knob.

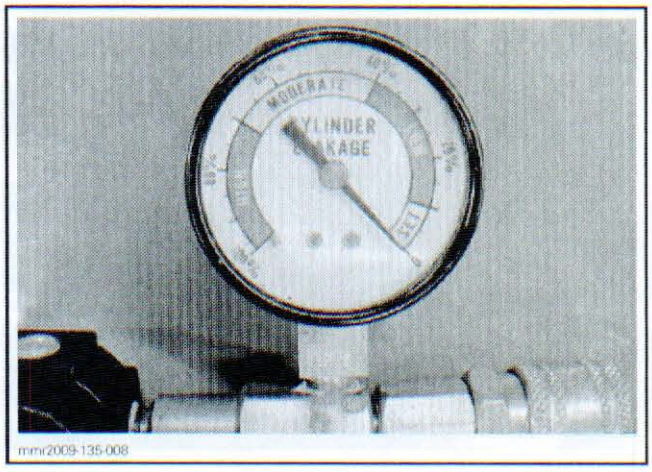

7. Connect a suitable adapter between compressor hose and engine leak down test kit output hose.

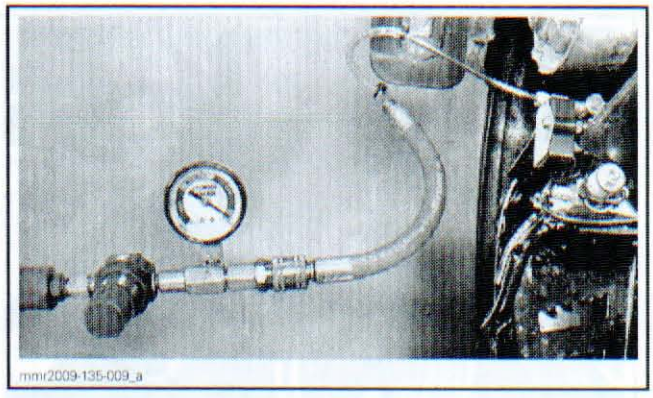

8. Check for a check valve leak, refer to the following table.

LEAK PERCENTAGE	CHECK VALVE
Below 10%	Good (do not replace)
Above 10%	Faulty (replace it)

ACS Compressor Removal

1. Release air pressure, refer to *ACS SYSTEM AIR PRESSURE RELEASE* in this subsection.
2. Remove LH side panel.
3. Disconnect inlet hose from manifold air fitting as follows:
   - 3.1 Push fitting ring toward manifold.
   - 3.2 Hold ring in place.
   - 3.3 Pull air hose.

www.midwestmanuals.com

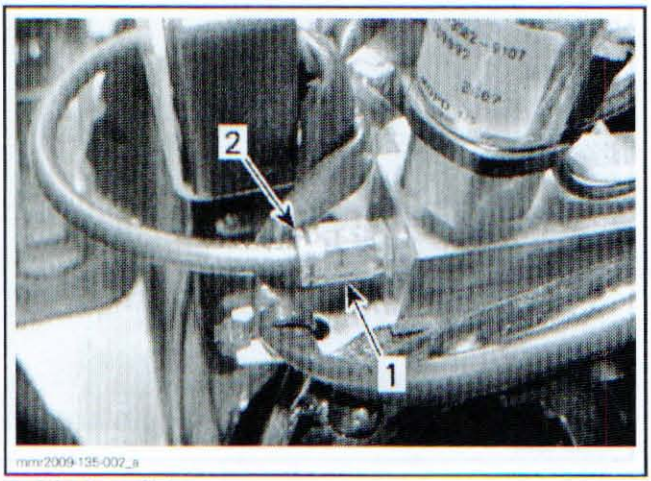

1. *Inlet hose fitting*
2. *Ring*

4. Disconnect compressor connector.

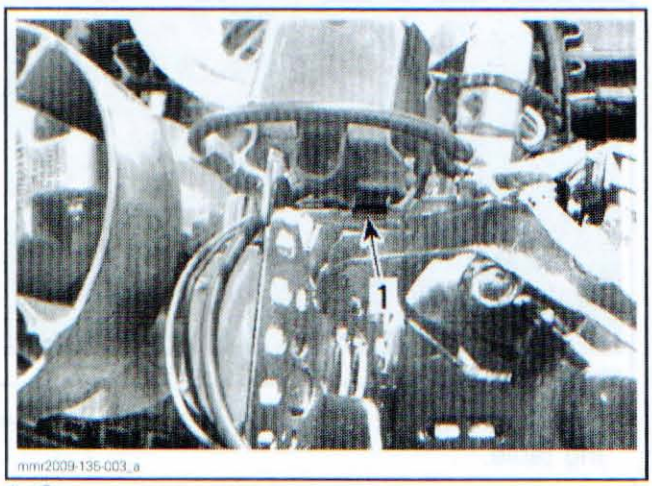

1. *Compressor connector*

5. Unscrew compressor retaining collars.

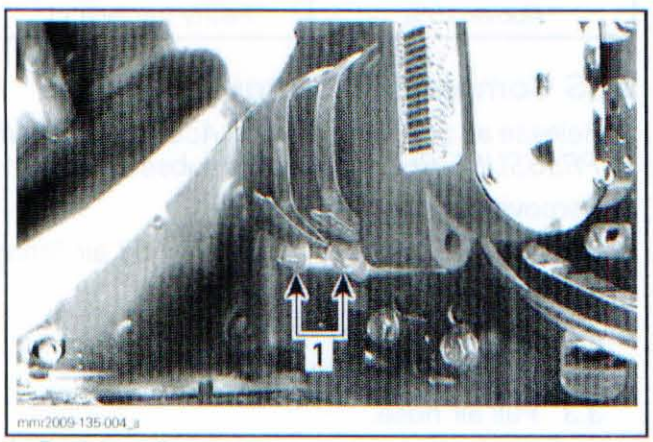

1. *Retaining collars*

6. Remove compressor from vehicle.
7. Disassemble compressor hose as per the following illustration.

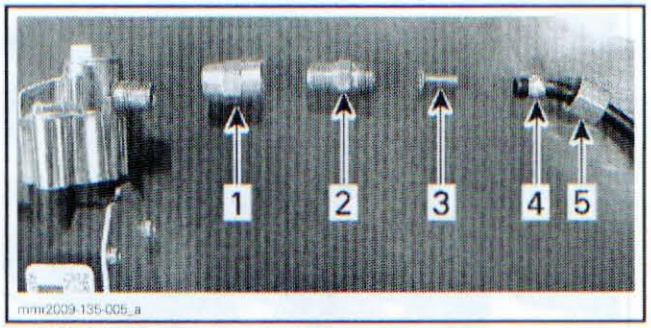

1. *NPT Nipple*
2. *Check valve*
3. *Inner sleeve*
4. *Outer sleeve*
5. *Retaining sleeve*

ACS Compressor Installation

The installation procedure is the reverse of removal procedure, however pay attention to the following.

Apply LOCTITE 592 (PIPE SEALANT) (P/N 293 800 018) on all male threads.

Properly install inner sleeve and outer sleeve on the air hose.

Completely push air hose into check valve before tightening the retaining sleeve.

Ensure that the air hose is inserted from 13 mm (1/2 in) into manifold air fitting.

Torque compressor retaining collars to 3 N•m (27 lbf•**in**).

ACS MODULE

⚠ WARNING

The ACS suspension system may be under high pressure (up to 8 bar (120 PSI)). Release air pressure prior to working on the system. Refer to *ACS SYSTEM AIR PRESSURE RELEASE* in this subsection.

ACS Module Signal Continuity Test

1. Remove multifunction gauge from vehicle. Refer to *LIGHTS, GAUGE AND ACCESSORIES* subsection.
2. Open LH side panel.
3. Disconnect module connector.

www.midwestmanuals.com

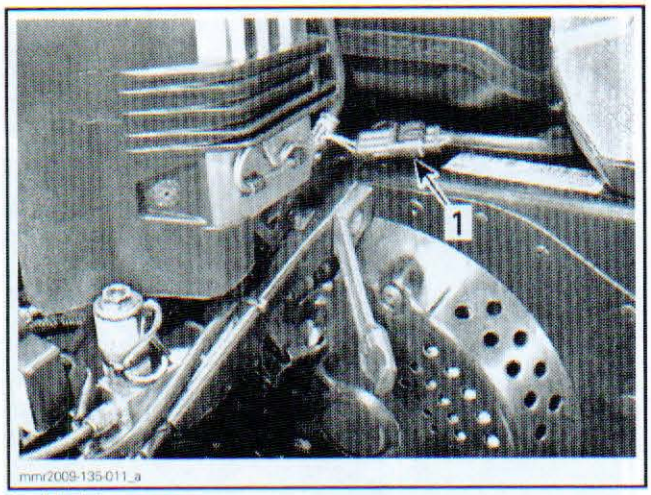

1. Module connector

4. Set the FLUKE 115 DIGITAL MULTIMETER (P/N 529 035 868) to Ω.
5. Measure resistance as per the following table.

TEST PROBES	RESISTANCE
Gauge pin 14 (WH/OR)	Close to 0 Ω
Module pin 2 (WH/OR)	

ACS Module Input Voltage Test

1. Open LH side panel.
2. Disconnect module connector.

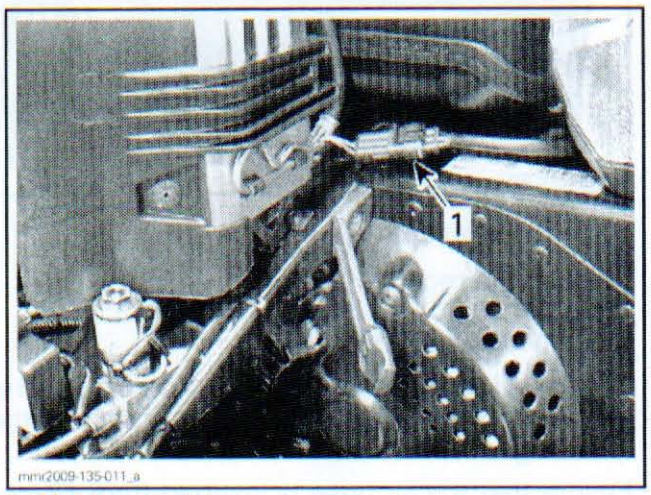

1. Module connector

3. Set the FLUKE 115 DIGITAL MULTIMETER (P/N 529 035 868) to Vdc.
4. Start engine.
5. Measure voltage as per the following table.

TEST PROBES	VOLTAGE
Pin 1 (RD/YL)	Battery voltage (± 12 Vdc)
Battery negative (-) post	

ACS Module Ground Test

1. Open LH side panel.
2. Disconnect module connector.

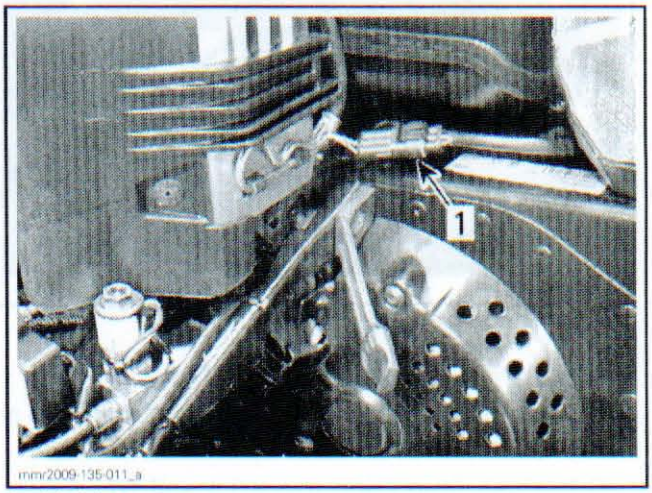

1. Module connector

3. Set the FLUKE 115 DIGITAL MULTIMETER (P/N 529 035 868) to Vdc.
4. Start engine.
5. Measure voltage as per the following table.

TEST PROBES	VOLTAGE
Pin 3 (BK)	Battery voltage (± 12 Vdc)
Battery positive (+) post	

ACS Module Removal

1. Release air pressure, refer to *ACS SYSTEM AIR PRESSURE RELEASE* in this subsection.
2. Remove LH side panel.
3. Disconnect compressor connector.

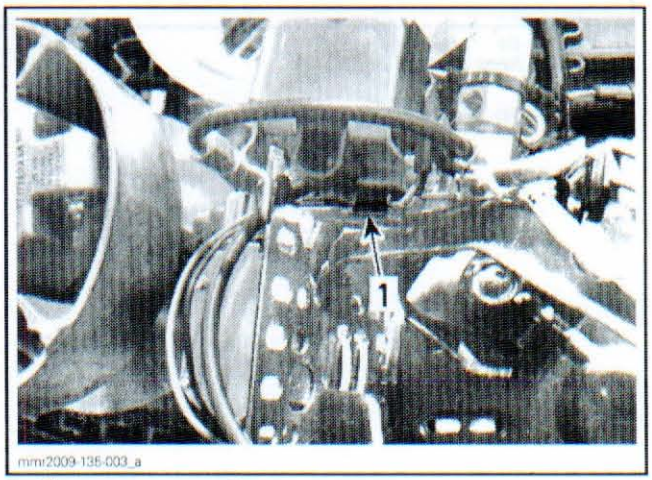

1. Compressor connector

4. Disconnect solenoid valve connector.

www.midwestmanuals.com

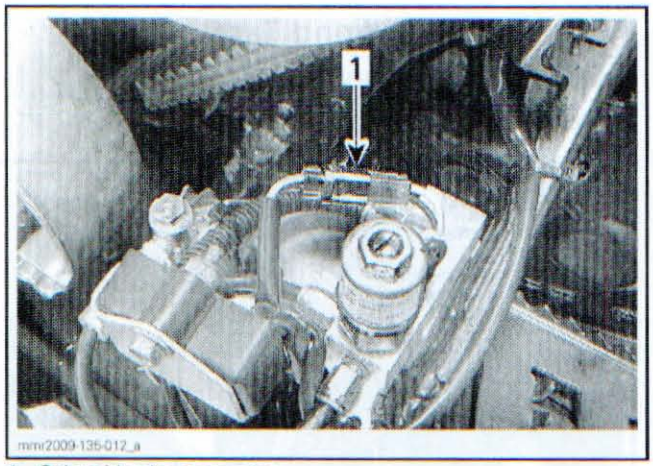

1. Solenoid valve connector

5. Cut locking tie from module hose.
6. Disconnect ACS module hose from manifold air fitting as follows:
   - 6.1 Push fitting ring toward manifold.
   - 6.2 Hold ring in place.
   - 6.3 Pull air hose.

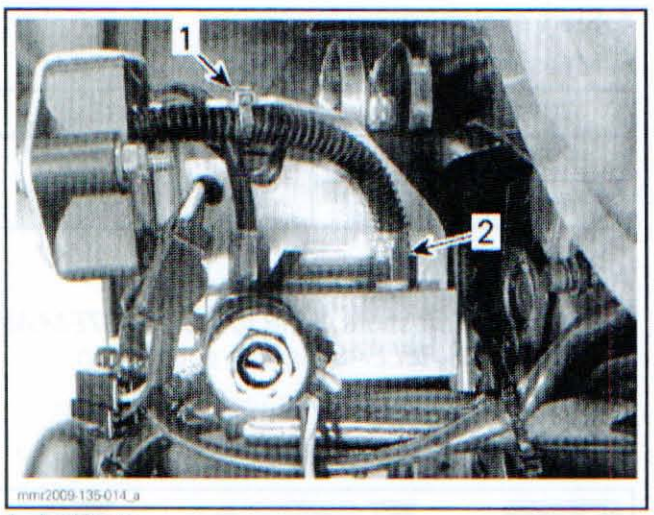

1. Locking tie
2. Module hose fitting

7. Remove module retaining bolt.

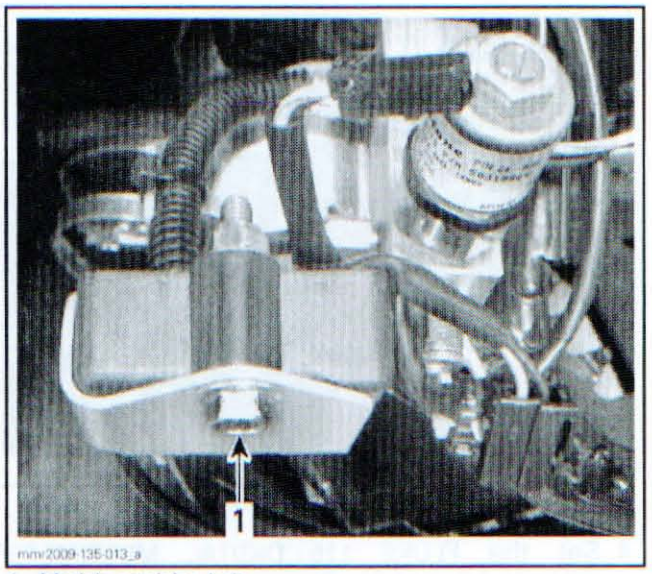

1. Module retaining bolt

8. Cut locking ties from module harness.
9. Disconnect module connector.

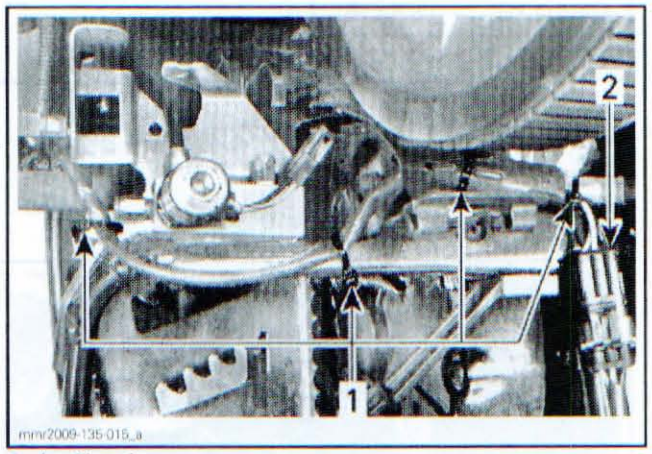

1. Locking ties
2. Module connector

10. Remove module from vehicle.

ACS Module Installation

The installation procedure is the reverse of removal procedure, however pay attention to the following.

Ensure that the air hose is inserted from 13 mm (1/2 in) into manifold air fitting.

Torque module retaining nut to 2.5 N•m (22 lbf•**in**).

www.midwestmanuals.com

ACS SOLENOID VALVE

⚠ WARNING

The ACS suspension system may be under high pressure (up to 8 bar (120 PSI)). Release air pressure prior to working on the system. Refer to *ACS SYSTEM AIR PRESSURE RELEASE* in this subsection.

ACS Solenoid Valve Operation Test

NOTICE **Do not power the solenoid valve directly with the battery for a long period. Apply voltage quickly to ensure that the valve will not completely empty the ACS system.**

1. Start vehicle.
2. Press MODE (M) button one time (AIR_SUSP will appear).
3. Set suspension mode to **2** using the heated throttle lever switch.
4. Wait until the actual setting shows 2 (lower display).

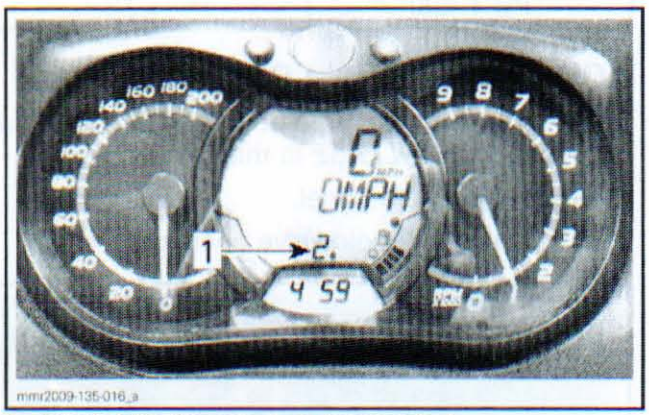

mmr2009-135-016_a

1. Actual setting (pressure transducer reading)

NOTE: Make sure to wait enough time in order to let the system adjust the air pressure.

5. Stop vehicle.
6. Open LH side panel.
7. Disconnect solenoid valve connector.

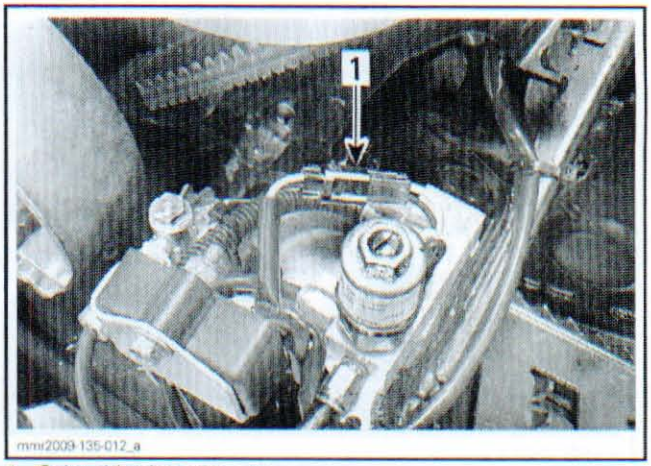

mmr2009-135-012_a

1. Solenoid valve connector

NOTICE **Be careful not to power the module by the solenoid valve connector in order to avoid to damage it permanently.**

8. Connect solenoid valve connector pin 2 (YELLOW/GREEN wire) to a 20 A suitable fuse jumper and then directly to the positive battery post.
9. Connect solenoid valve connector pin 1 (BLACK wire) directly to the negative battery post.

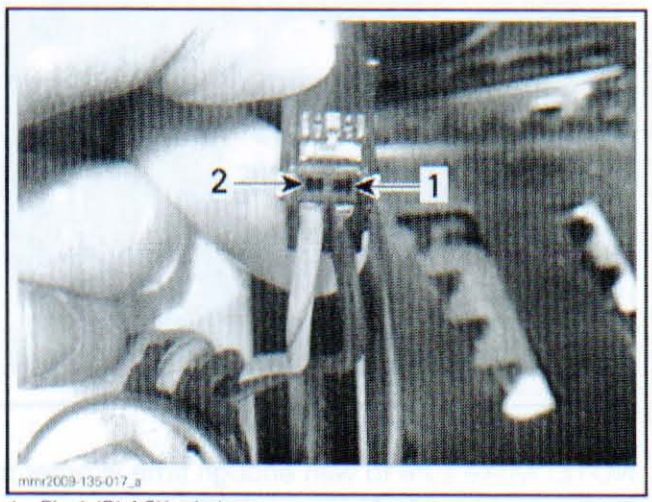

mmr2009-135-017_a

1. Pin 1 (BLACK wire)
2. Pin 2 (YELLOW/GREEN wire)

10. Verify that air exits from side port to confirm proper solenoid operation.

www.midwestmanuals.com

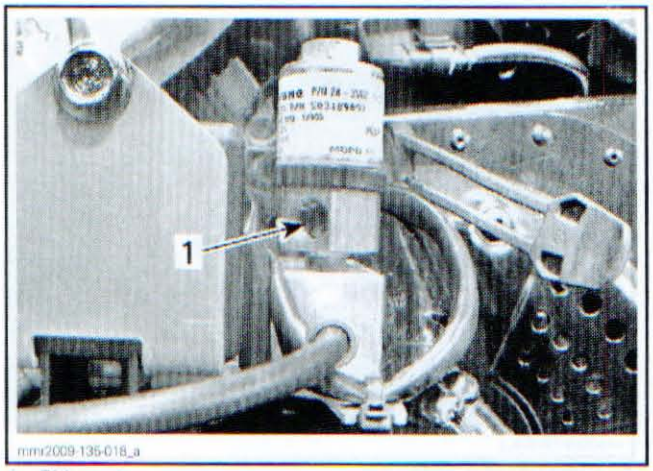

1. Side port

ACS Solenoid Valve Input Voltage Test

1. Start vehicle.
2. Press MODE (M) button one time (AIR_SUSP will appear).
3. Set suspension mode to **2** using the heated throttle lever switch.
4. Wait until the actual setting shows 2 (lower display).

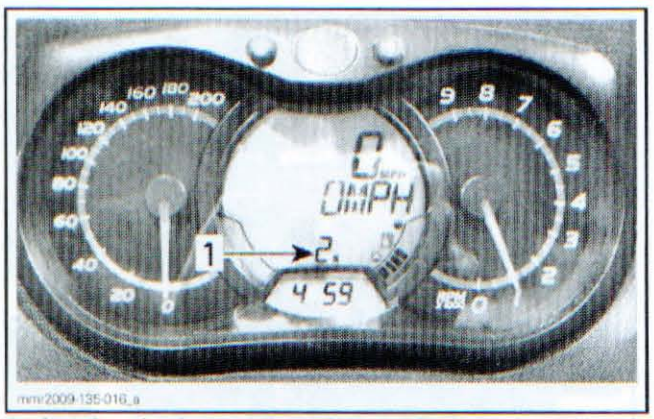

1. Actual setting (pressure transducer reading)

NOTE: Make sure to wait enough time in order to let the system adjust the air pressure.

5. Set the FLUKE 115 DIGITAL MULTIMETER (P/N 529 035 868) to Vdc.
6. Open LH side panel.
7. Back probe solenoid connector (without disconnecting).

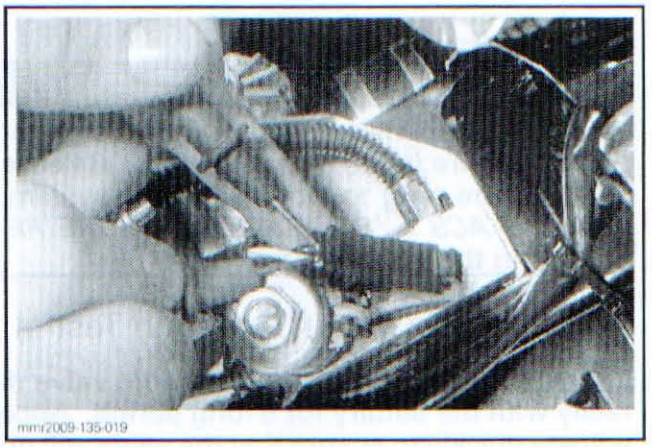

8. Press MODE (M) button one time (AIR_SUSP will appear).
9. Set suspension mode to 1 using the heated throttle lever switch.
10. Measure voltage between solenoid connector terminals as per the following table.

TEST PROBES	VOLTAGE
Pin 2 (YL/GN)	Battery voltage (± 12 Vdc)
Pin 1 (BK)	

ACS Solenoid Valve Removal

1. Release air pressure, refer to *ACS SYSTEM AIR PRESSURE RELEASE* in this subsection.
2. Remove LH side panel.
3. Disconnect solenoid valve connector.

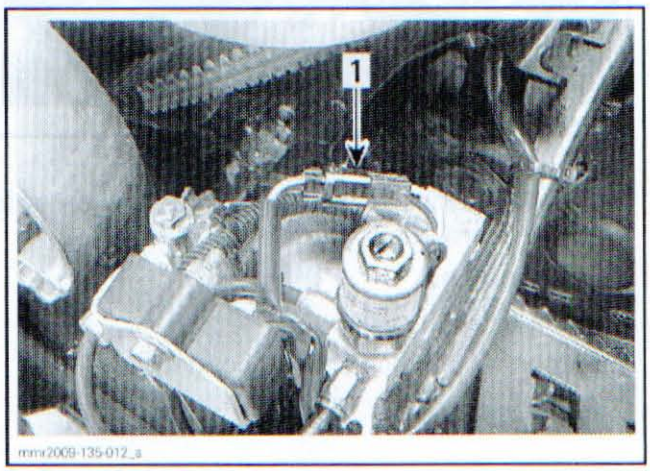

1. Solenoid valve connector

4. Unscrew solenoid valve from manifold.

www.midwestmanuals.com

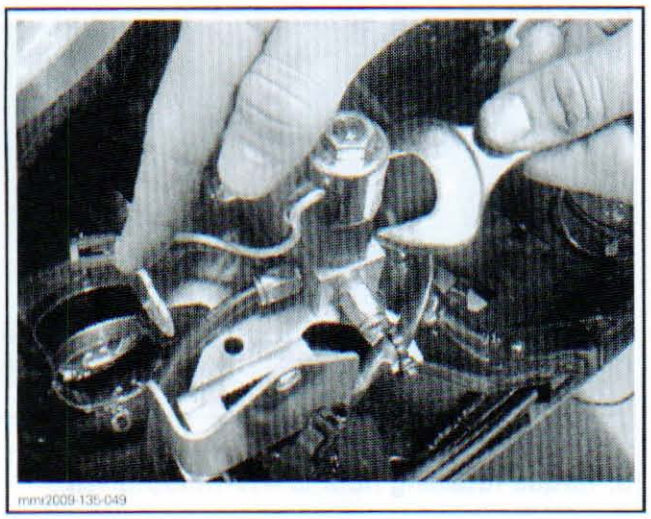

ACS Solenoid Valve Installation

The installation procedure is the reverse of removal procedure, however pay attention to the following.

Apply LOCTITE 592 (PIPE SEALANT) (P/N 293 800 018) on male threads.

ACS MANIFOLD

⚠ WARNING

The ACS suspension system may be under high pressure (up to 8 bar (120 PSI)). Release air pressure prior to working on the system. Refer to *ACS SYSTEM AIR PRESSURE RELEASE* in this subsection.

ACS Manifold Removal

1. Release air pressure, refer to *ACS SYSTEM AIR PRESSURE RELEASE* in this subsection.
2. Remove LH side panel.
3. Disconnect the following hoses from manifold air fittings.
   - Compressor inlet hose
   - Module hose
   - Shock hose.
4. Disconnect solenoid valve connector.
5. Unscrew solenoid valve from manifold.
6. Remove manifold retaining screws.

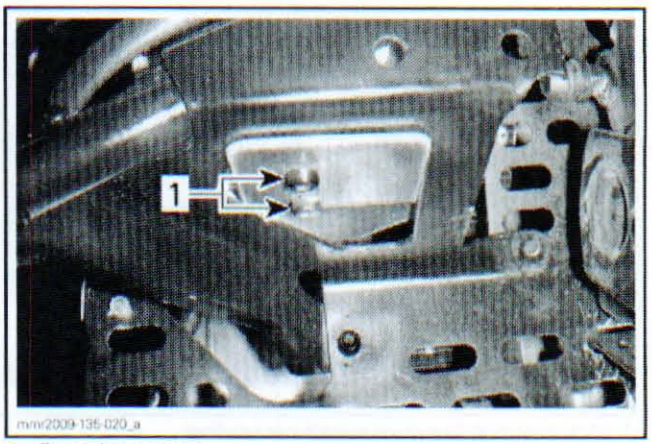

1. Retaining screws

NOTE: To remove support, drill out the front rivet.

ACS Manifold Installation

The installation procedure is the reverse of removal procedure, however pay attention to the following.

Apply LOCTITE 592 (PIPE SEALANT) (P/N 293 800 018) on all male threads.

Ensure that air hoses are inserted from 13 mm (1/2 in) into manifold air fittings.

ACS HOSES

⚠ WARNING

The ACS suspension system may be under high pressure (up to 8 bar (120 PSI)). Release air pressure prior to working on the system. Refer to *ACS SYSTEM AIR PRESSURE RELEASE* in this subsection.

ACS Hose Leak Test

1. Start vehicle.
2. Press MODE (M) button one time (AIR_SUSP will appear).
3. Set suspension mode to **3** using the heated throttle lever switch.
4. Wait until the actual setting shows 3 (lower display).

www.midwestmanuals.com

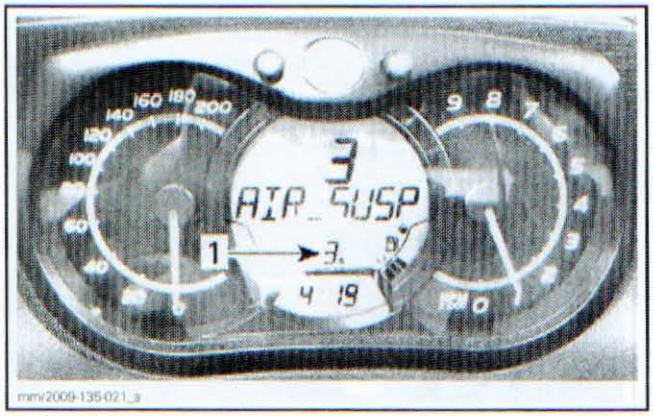

1. Actual setting (pressure transducer reading)

NOTE: Make sure to wait enough time in order to let the system adjust the air pressure.

5. Inspect all hoses and fittings with soapy water to detect leaks.

ACS Hose and Fitting Replacement

1. Release air pressure, refer to *ACS SYSTEM AIR PRESSURE RELEASE* in this subsection.
2. Locate hose or fitting to be replaced.
3. Remove it from vehicle.
4. Install the new hose or fitting.
5. Perform a *HOSE LEAK TEST.*

NOTE: Apply LOCTITE 592 (PIPE SEALANT) (P/N 293 800 018) on all male threads.

ACS Hose Protector Replacement

1. Remove hose protector retaining bolts and nuts located on LH side of tunnel.

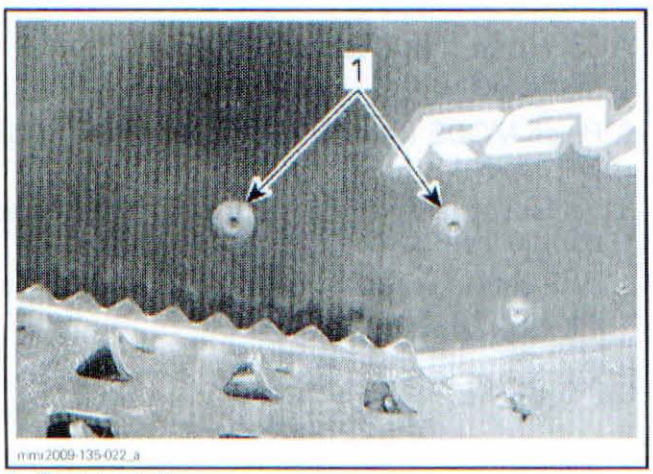

1. Retaining bolts

2. Replace hose protector that is located from underneath tunnel.

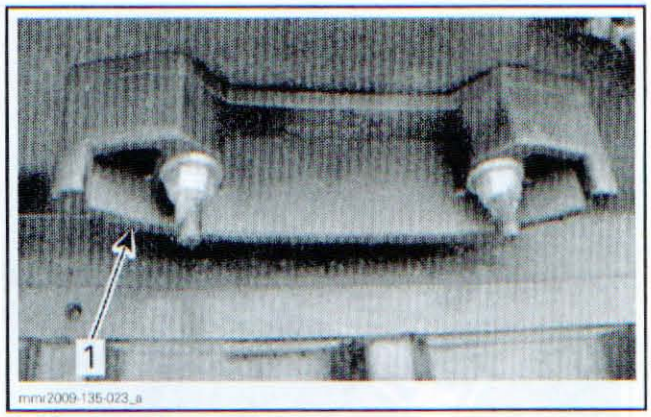

1. Hose protector

3. Torque retaining nuts to 4 N•m (35 lbf•**in**).

www.midwestmanuals.com

STEERING SYSTEM

SERVICE TOOLS

Description	Part Number	Page
HEATED GRIP INSTALLER	529 035 897	445

SERVICE TOOLS – OTHER SUPPLIER

Description	Part Number	Page
MULTILOCK-TERMINAL HOUSING EXTRACTION TOOL AMP	755430-2	444

SERVICE PRODUCTS

Description	Part Number	Page
THERMO LUBE SYNTHETIC GREASE	219 700 417	450

www.midwestmanuals.com

SKIS

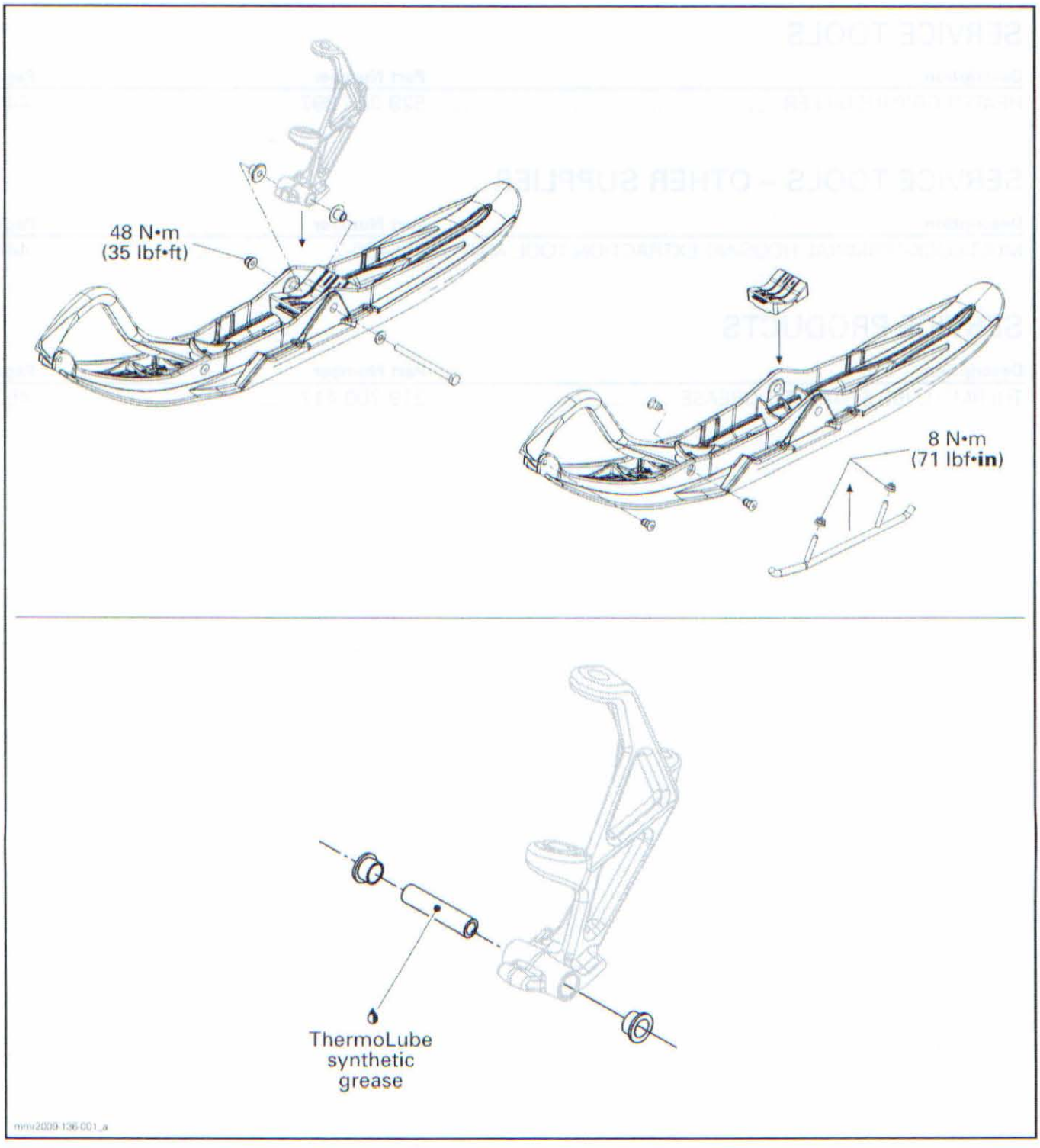

www.midwestmanuals.com

STEERING COLUMN AND TIE-RODS

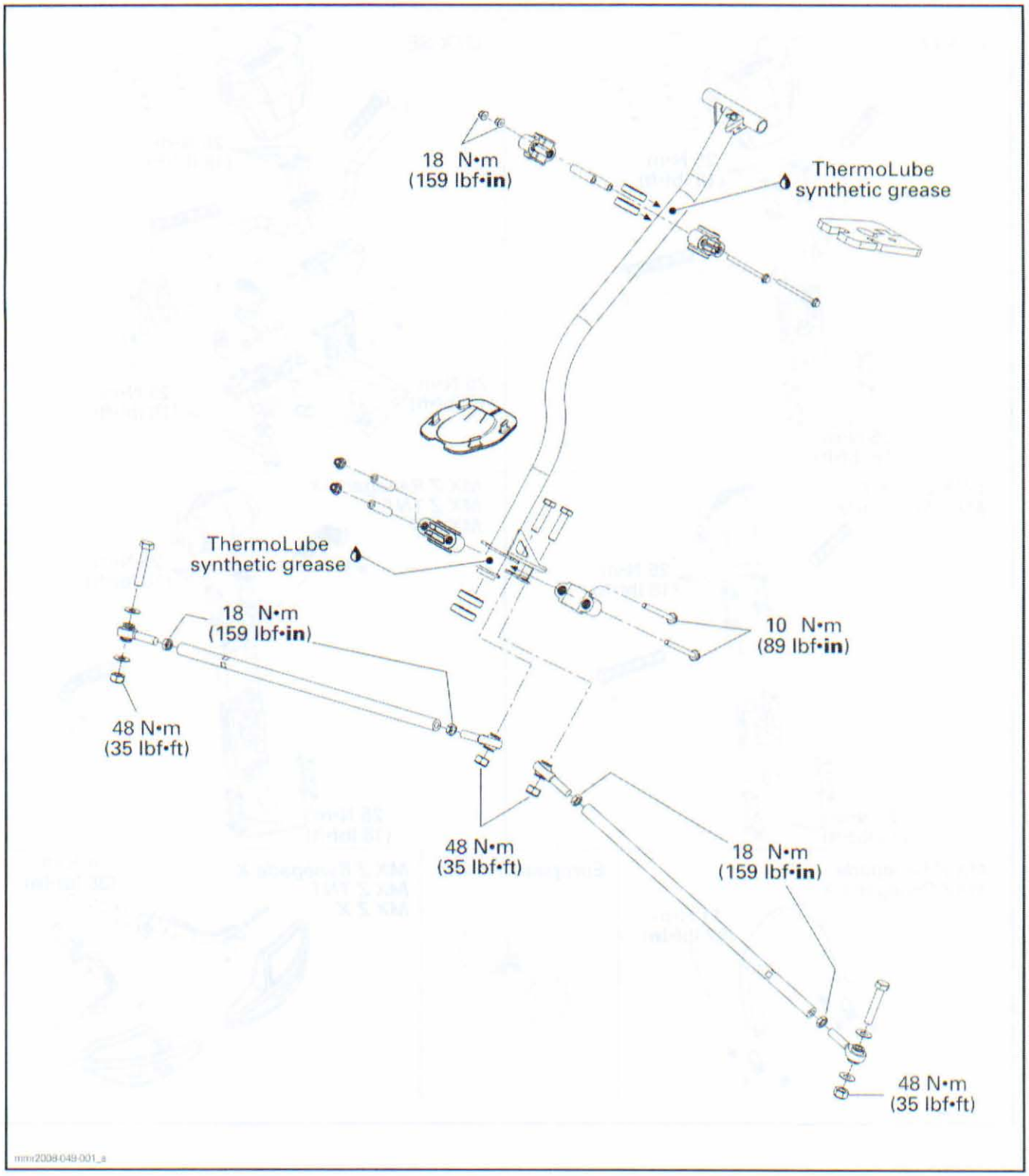

www.midwestmanuals.com

HANDLEBAR

GTX LE

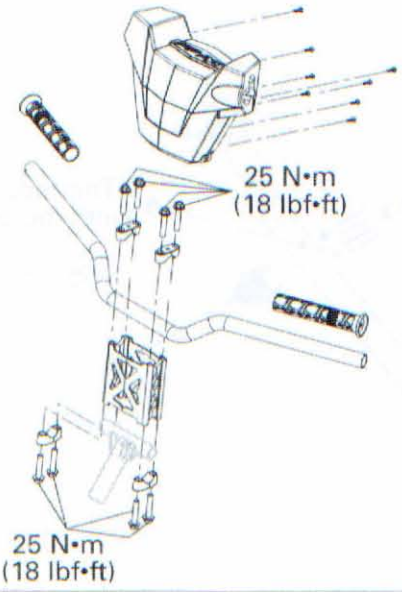

GTX SE

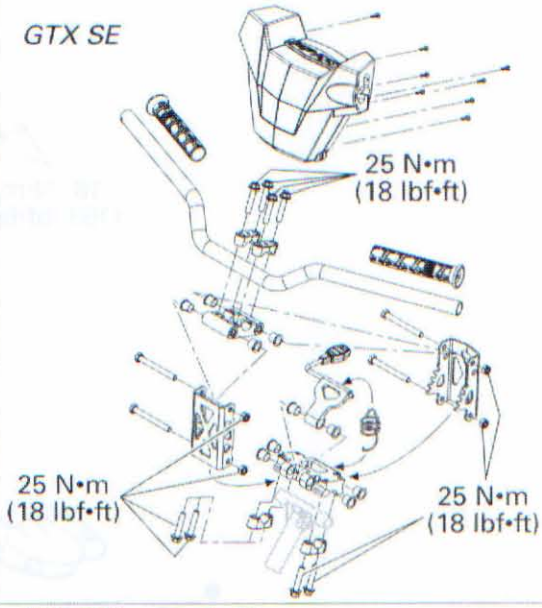

GSX Limited
MXZ Renegade

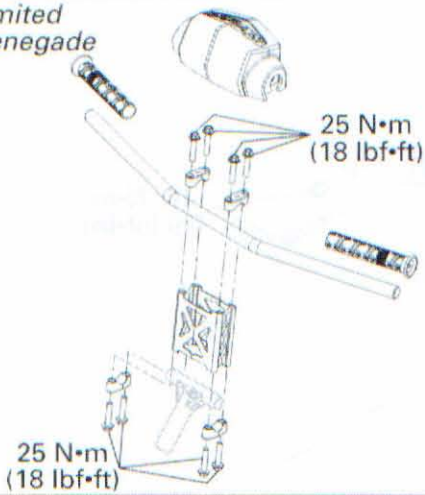

MX Z Renegade X
MX Z TNT
MX Z X

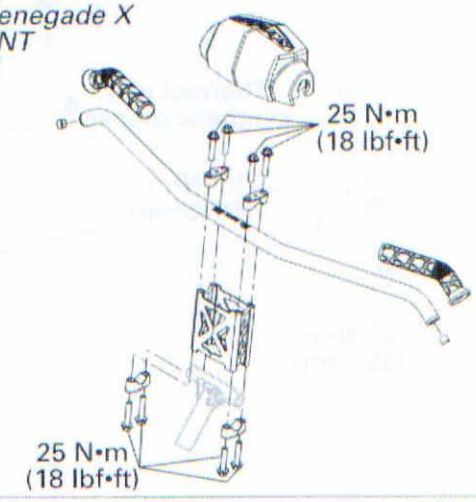

MX Z Renegade
MXZ Renegade X

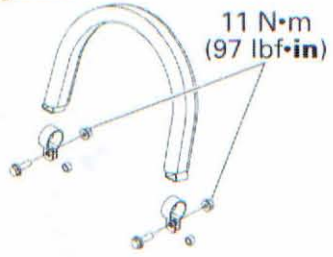

European models



MX Z Renegade X
MX Z TNT
MX Z X

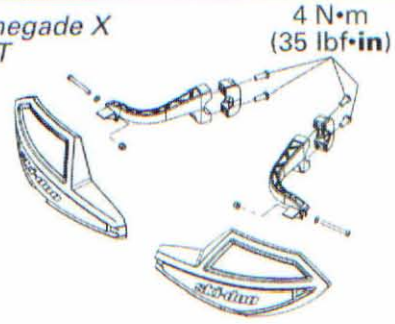

mmr2009-136-002_a

www.midwestmanuals.com

GENERAL

When removing or replacing a part of steering system (except handle grips and handlebar), perform the steering alignment, refer to *STEERING ALIGNMENT* in this subsection.

During assembly/installation, use the torque values and service products as in the exploded views.

Clean threads before applying a threadlocker. Refer to *SELF-LOCKING FASTENERS* and *LOCTITE APPLICATION* at the beginning of this manual for complete procedure.

⚠ WARNING

Torque wrench tightening specifications must be strictly adhered to.
Locking devices (e.g.: locking tabs, elastic stop nuts, cotter pins, etc.) must be replaced with a new ones.

Hoses, cables and locking ties removed during a procedure must be reinstalled as factory standards.

ADJUSTMENT

STEERING ALIGNMENT

Ski alignment is performed by adjusting length of left and right tie-rods. To do this, use the following procedure:

1. Leave the vehicle on the ground on its own weight.
2. Attach ski handles together with a bungee cord.

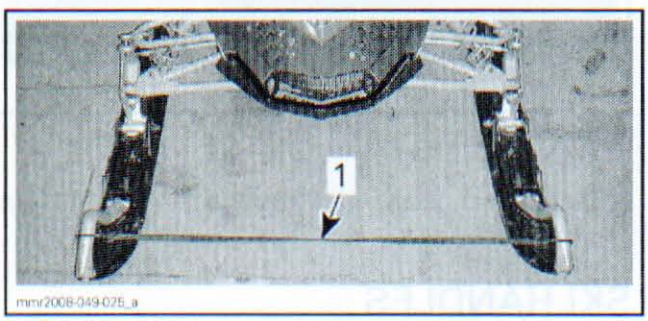

1. Bungee cord

3. Position handlebar so that it is straight ahead position by measuring from the extremities of the grips to the rear most edge of the tunnel, as shown.

NOTE: The reference point must be the same to each side.

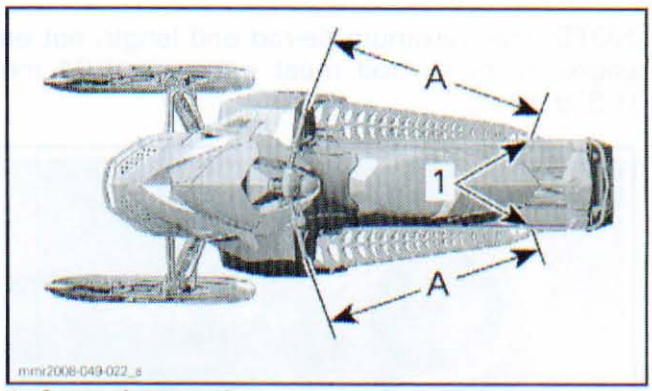

1. Same reference point
A. Equal distance on each side

4. Verify if skis are in straight-ahead position by placing a straight edge against adjusted track and measuring distance between front and rear ski recesses and straight edge.
5. When skis are in straight ahead position, adjust the toe-out.
6. Measure the distance between front and rear ski recesses.
7. Use the following illustration and this equation to determine the perfect steering adjustment.

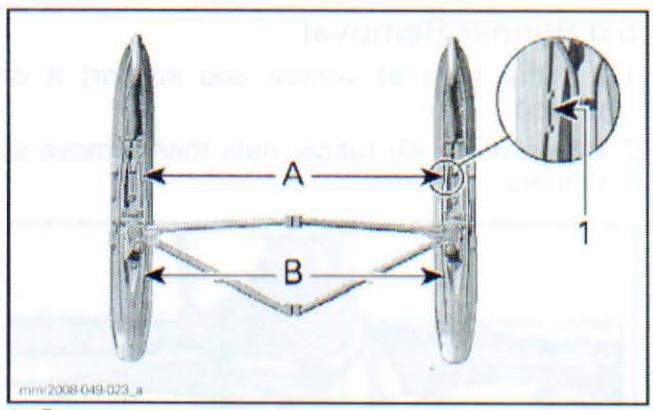

1. Recesses
A – B = 5 MM (.197 IN)

STEERING ALIGNMENT	
Toe-out	5 mm (.197 in)

8. If adjustment is needed, loosen tie-rod jam nuts then turn tie-rods to change their length.
9. Tighten jam nuts and torque them to 18 N•m (159 lbf•**in**).

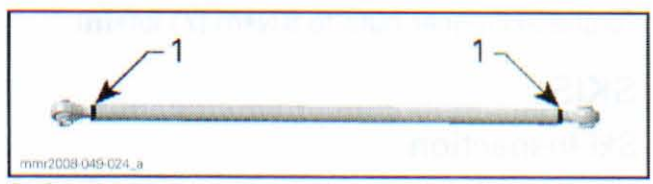

1. Jam nut

www.midwestmanuals.com

NOTE: The maximum tie-rod end length not engaged in the tie rod must not exceed 34 mm (1.339 in).

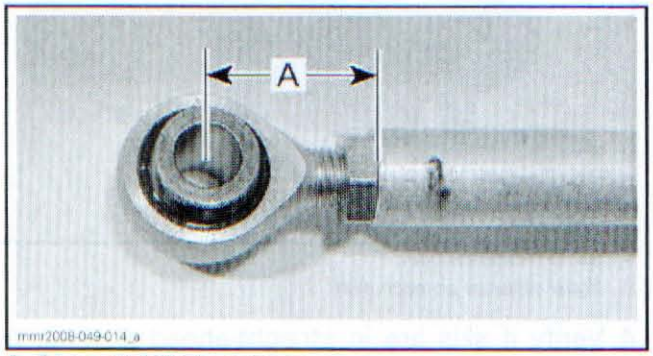

A. 34 mm (1.339 in) maximum

PROCEDURES

SKI RUNNERS

Ski Runner Inspection

Lift the front of vehicle and check ski runners for wear or damages (missing or broken carbide). Replace if necessary.

Ski Runner Removal

1. Lift the front of vehicle and support it off ground.
2. Unscrew the ski runner nuts then remove ski runners.

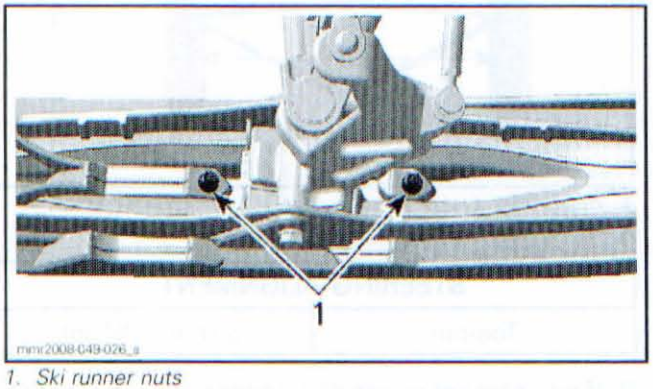

1. Ski runner nuts

Ski Runner Installation

The installation is the reverse of the removal procedure. Pay attention to the following.

Torque ski runner nuts to 8 N•m (71 lbf•**in**).

SKIS

Ski Inspection

Inspect ski for excessive wear or other damage. Replace if necessary.

Ski Removal

1. Lift front of vehicle and support it off ground.
2. Unscrew nut then pull ski bolt out.

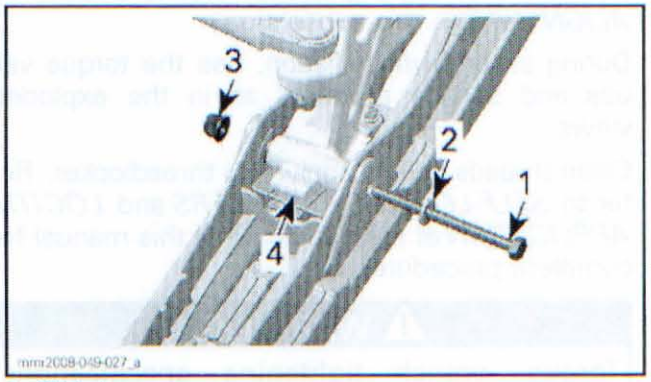

1. Ski bolt
2. Washer
3. Nut
4. Ski leg

3. Remove ski from vehicle.

Ski Installation

1. Make sure bushings are installed in ski holes.
2. Install the ski stopper. Position indicator in front and make sure the bump in the ski is in the groove of the ski stopper.

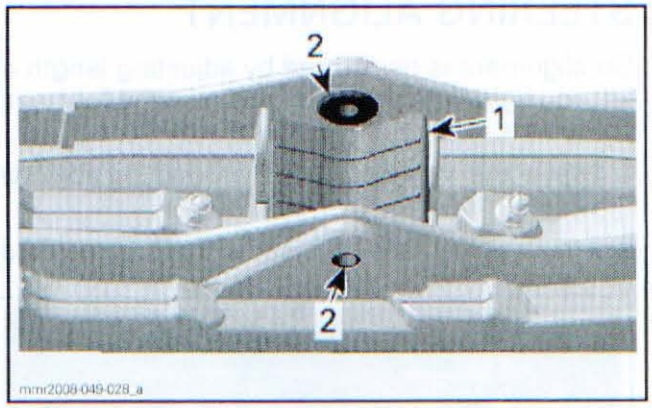

1. Ski stopper
2. Bushings

3. Install ski bolt and torque it to 48 N•m (35 lbf•ft).

SKI HANDLES

Ski Handle Removal

1. Remove ski from vehicle.
2. Using a 9 mm (3/8 in) drill bit, remove ski handle rivets. Only drill the head of rivet. Do not try to drill all the way through the rivet. Angle the drill bit to reduce the chance of spinning the rivet in the ski.

www.midwestmanuals.com

3. Remove handle from ski.
4. Place handle in hot water for 10 minutes then using a punch, drive the inner part of rivet out of handle.

Ski Handle Installation

1. To install rivets, use a C-clamp and a short 10 mm socket.
2. Place a rivet in position and insert it into ski and ski handle. Repeat the procedure for the other side.

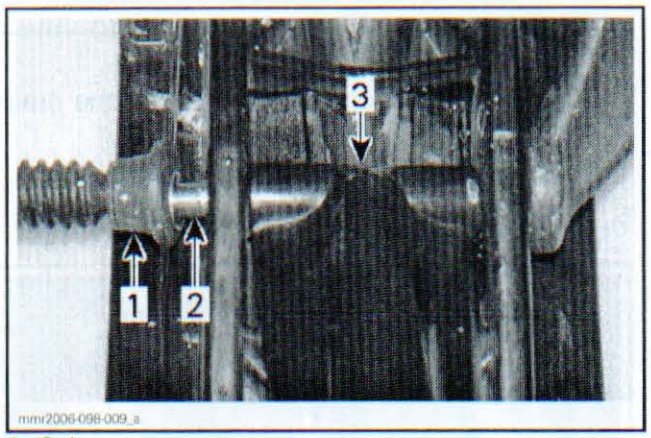

1. C-clamp
2. Rivet
3. Handle

3. When both rivets are installed, use the short 10 mm socket to push rivet heads against ski.

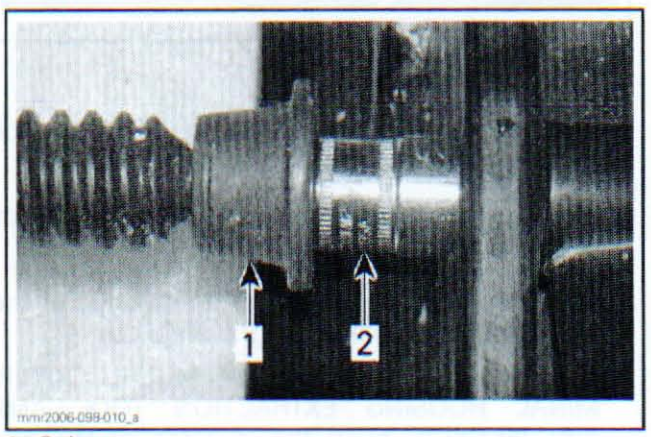

1. C-clamp
2. 10 mm socket

SKI LEGS

To replace a ski leg, refer to *FRONT SUSPENSION* subsection.

HANDLEBAR GRIPS

Two handlebar grip types are available, with or without integrated elements.

NOTE: To verify heating elements, refer to *LIGHTS, GAUGE AND ACCESSORIES* subsection.

Handlebar Grip Removal (Integrated Heating Element)

NOTICE Removing grip from handlebar might damage the heating element. Do not remove needlessly.

Throttle Side:

1. Loosen engine stop switch and throttle lever.

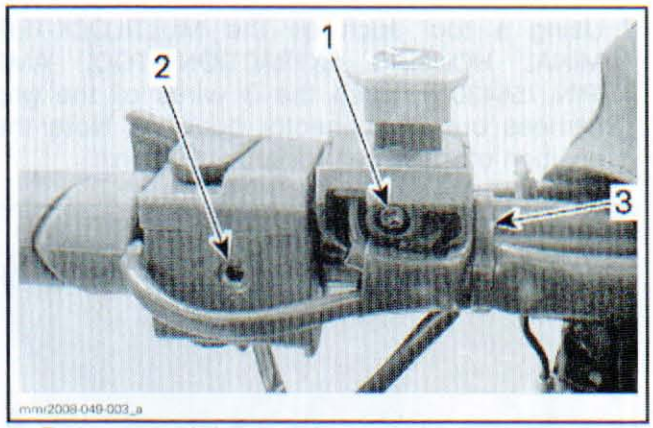

1. Engine stop switch screw
2. Throttle lever screw
3. Cut this locking tie

2. Move them towards the steering column.
3. Remove the steering cover.
4. Unplug the heating element connector.



GSX LIMITED SHOWN
1. Heating element connector

5. Insert the open side of a 23 mm (7/8 in) wrench against the inner end of grip.

NOTICE Pay attention not to damage wires with the wrench.

6. Using a plastic hammer, tap on the side of the wrench end to make the grip slide out.

www.midwestmanuals.com

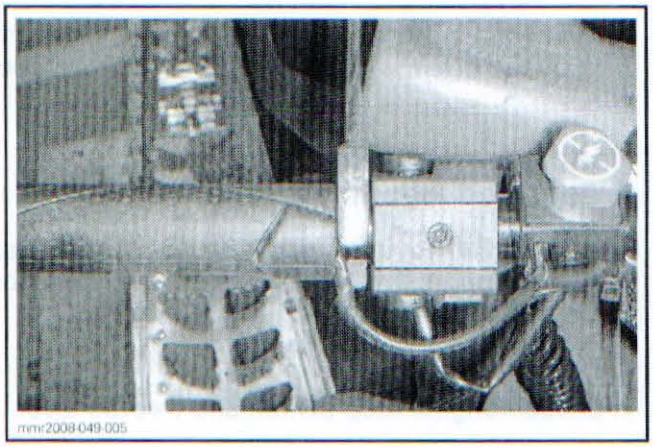

7. Using a tool such as the MULTILOCK-TERMINAL HOUSING EXTRACTION TOOL AMP (P/N 755430-2), push the 3 wires of the grip harness out of connector housing. Note the position of the wires for reinstallation.

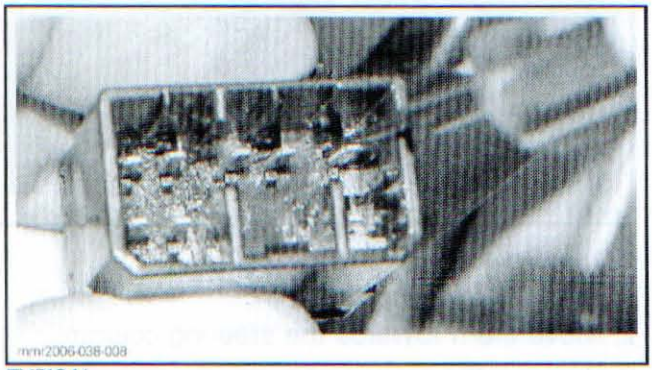

TYPICAL

Brake Side:

1. Unscrew master cylinder from handlebar.

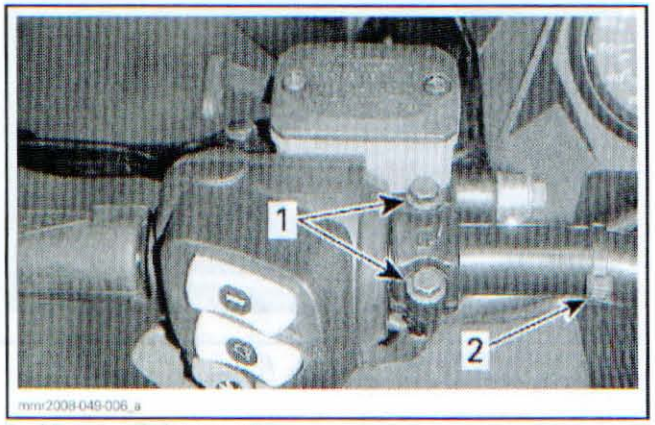

1. Master cylinder screws
2. Cut this locking tie

2. Loosen multifunction switch screws.

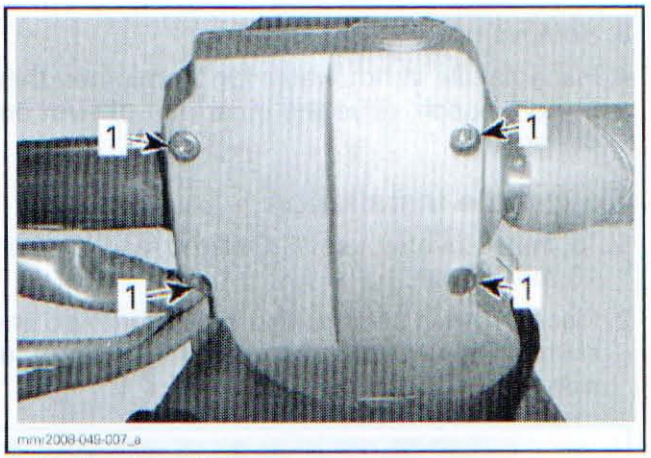

1. Multifunction switch screws

3. Move multifunction switch towards the steering column.
4. Remove the steering cover.
5. Unplug the heating element connector.

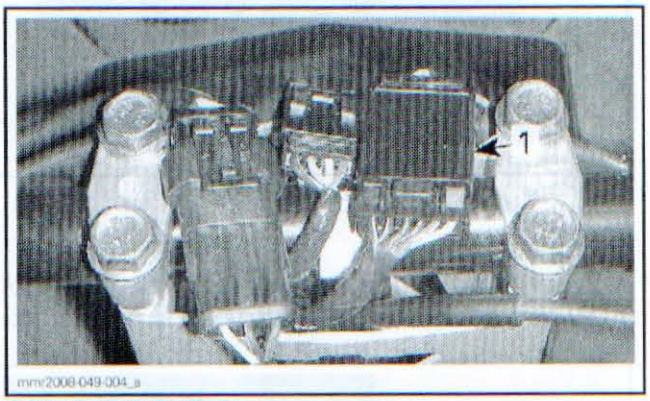

GSX LIMITED SHOWN
1. Heating element connector

6. Insert the open side of a 23 mm (7/8 in) wrench against the inner end of grip.

NOTICE Pay attention not to damage wires with the wrench.

7. Using a plastic hammer, tap on the side of the wrench end to make the grip slide out.
8. Using a tool such as the MULTILOCK-TERMINAL HOUSING EXTRACTION TOOL AMP (P/N 755430-2), push the 3 wires of the grip harness out of connector housing. Note the position of the wires for reinstallation.

www.midwestmanuals.com

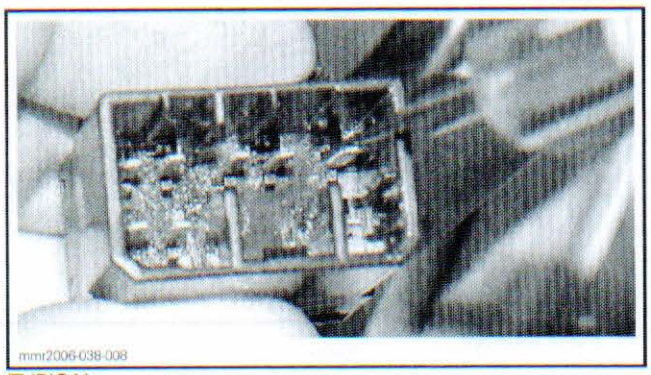

TYPICAL

Handlebar Grip Removal (Without Integrated Heating Element)

Remove grips by pulling while using compressed air, which will inflate or loosen the fit between the grip and handlebar, as shown on picture.

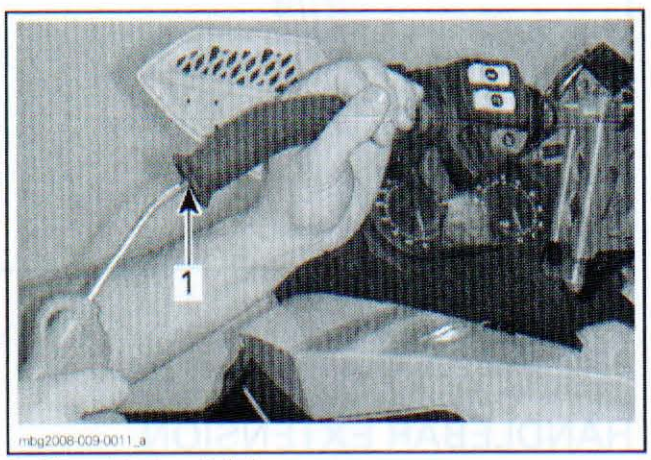

1. Blow air in the grip hole

Handlebar Grip Installation (With Integrated Heating Element)

1. Clean handlebar ends and inside of grip with isopropyl alcohol. Let dry before installation.

NOTICE **Handlebar end and inside of heating grip must be clean and dry before installing heating grip to ensure proper adhesion.**

2. Use the HEATED GRIP INSTALLER (P/N 529 035 897) to properly install grip.

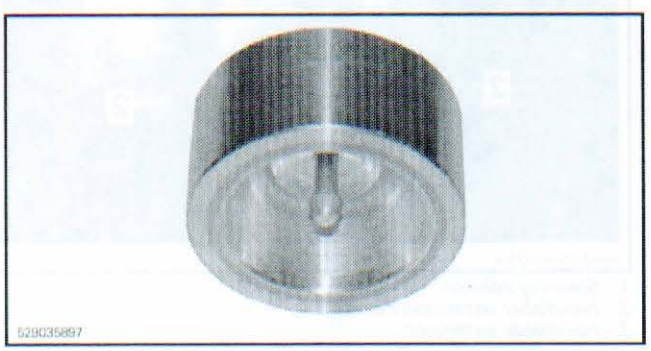

NOTICE **Installing grip without the insertion tool is likely to damage its heating element.**

3. Position the insertion tool at the outside end of grip.
4. Using a plastic hammer, tap on tool to push grip on. Continue to tap until grip bottoms.

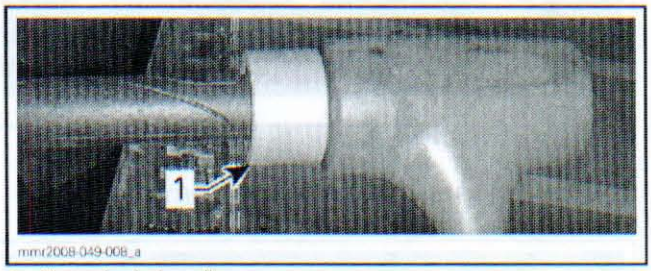

1. Heated grip installer

5. Properly route harness at the front of steering.
6. Reinstall terminals and re-plug connectors. Test grips to ensure they heat properly.

NOTE: Note that grips will not work if the engine is at idle speed. Electricity is supplied to grips only if engine is over 2000 RPM.

7. Install all other removed parts.

Handlebar Grip Installation (Without Integrated Heating Element)

Insert the handlebar grip on handlebar while blowing compressed air to inflate or loosen the fit between grip and handlebar.

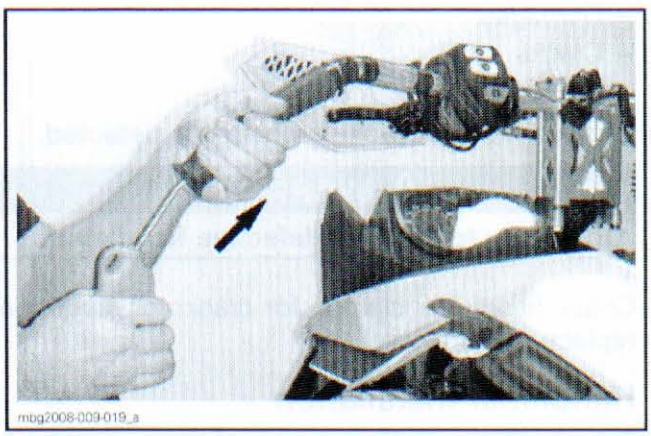

HANDLEBAR

Handlebar Removal

NOTE: If the handlebar must be changed, remove all components (handle grip, throttle lever housing, etc.) before removing it from vehicle.

1. Remove steering cover.
2. Unplug all connectors.

www.midwestmanuals.com

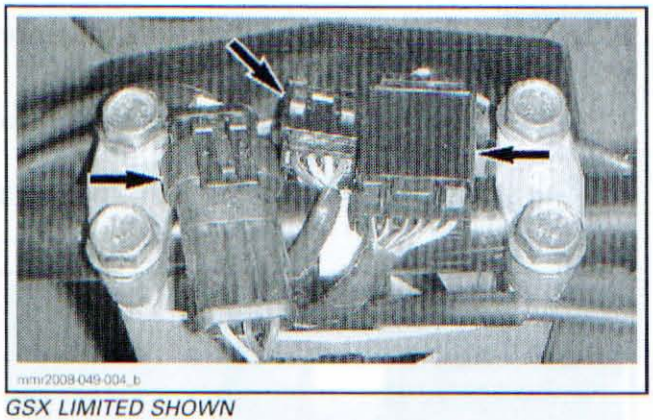
mmr2008-049-004_b

GSX LIMITED SHOWN

3. Remove handlebar retaining clamp screws.

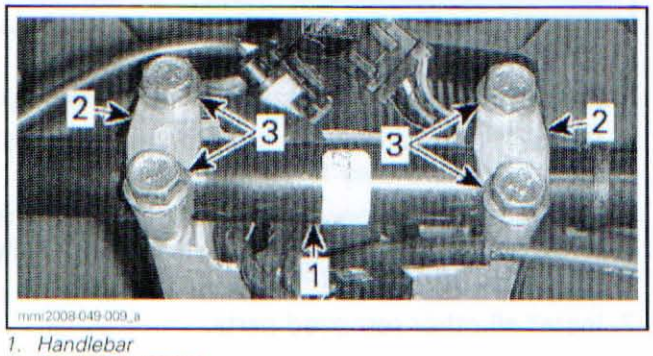

mmr2008-049-009_a

1. *Handlebar*
2. *Retaining clamps*
3. *Screws*

4. Remove handlebar from handlebar extension.

Handlebar Inspection

Inspect the handlebar for:
- Damages
- Cracks
- Bending.

Replace if any of these problems is detected.

⚠ WARNING

Do not try to repair a defective handlebar.

Check handlebar clamps for cracks or distortion, replace if necessary.

Handlebar Installation

The installation is the reverse of the removal procedure. However, pay attention to the following.

Handlebar Strap

MX Z (Renegade, Renegade X)

1. Ensure to position strap symmetrically each side of handlebar retaining clamps.

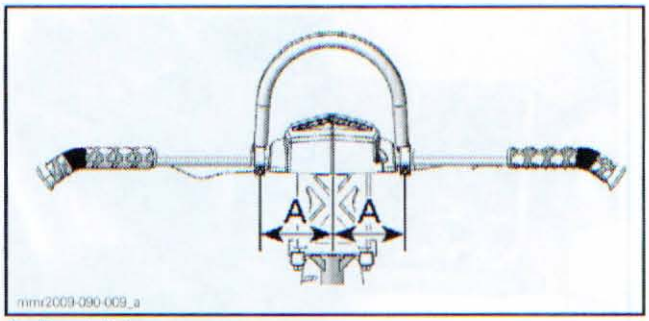

mmr2009-090-009_a

A. Equal distance

2. Tilt strap 5° ± 5° towards driver relative to handlebar extension.

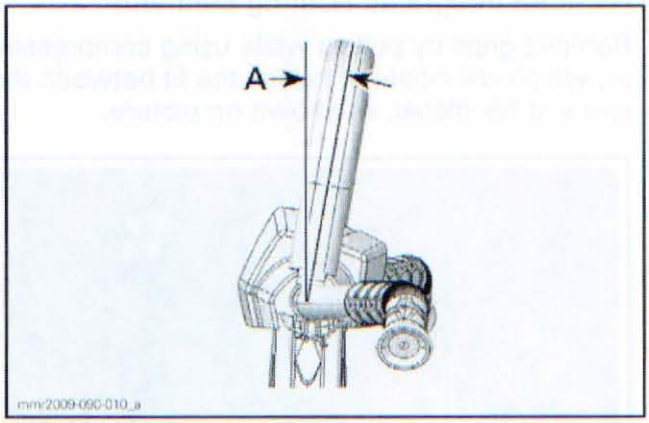

mmr2009-090-010_a

A. 5° ± 5°

3. Retaining clip and hardware must be installed in the same position on both strap ends.

HANDLEBAR EXTENSION

All Models except GTX SE

Handlebar Extension Removal

1. Remove *HANDLEBAR* from handlebar extension, see procedure in this subsection.
2. Unscrew bolts retaining the extension to steering column.

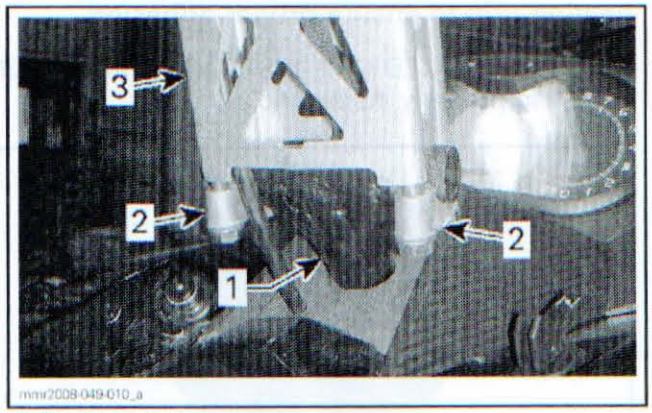

mmr2008-049-010_a

1. *Steering column*
2. *Handlebar extension clamps*
3. *Handlebar extension*

www.midwestmanuals.com

3. Remove handlebar extension from vehicle.

Handlebar Extension Inspection

Check handlebar extension for:
- Cracks
- Bending
- Other damages.

Replace if any of these problems is detected.

⚠ WARNING

Do not try to repair a defective handlebar extension.

Handlebar Extension Installation

The installation is the reverse of the removal procedure. However, pay attention to the following.

When installing handlebar extension, ensure to leave a gap between handlebar extension and stop block on steering column.

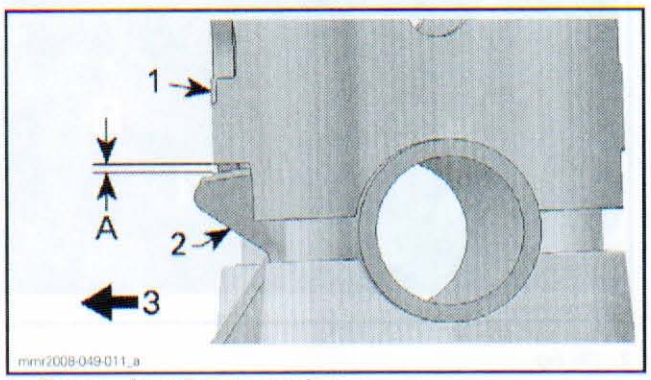

1. *Bottom of handlebar extension*
2. *Steering column stop block*
3. *Front of vehicle*

A. 1 mm (.039 in) minimum

⚠ WARNING

Handlebar and it's components must not get in contact with anything (windshield, fuel tank cap, etc.) when steering is turned.

ADJUSTABLE HANDLEBAR EXTENSION

GTX SE Only

Adjustable Handlebar Extension Removal

1. Remove *HANDLEBAR* from handlebar extension, see procedure in this subsection.
2. Remove screws retaining the adjustable extension to steering column.

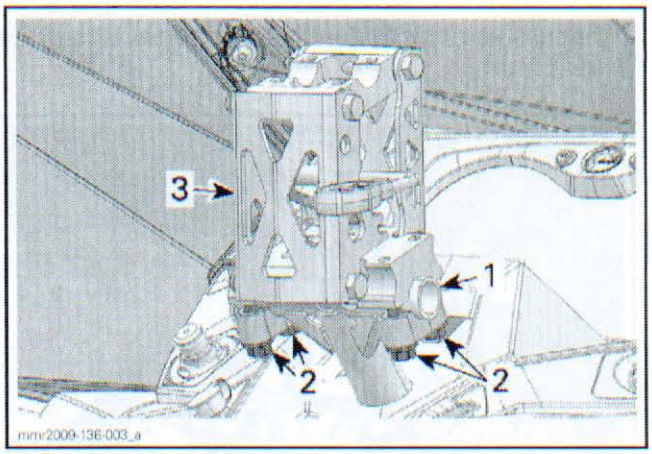

1. *Steering column*
2. *Retaining screws*
3. *Adjustable handlebar extension*

3. Remove the adjustable handlebar extension from vehicle.

Adjustable Handlebar Extension Inspection

Check adjustable handlebar extension for:
- Cracks
- Bending
- Other damages.

Check the proper operation of the locking mechanism.

Replace if any of these problems is detected.

⚠ WARNING

Do not try to repair a defective adjustable handlebar extension.

Adjustable Handlebar Extension Installation

1. Insert throttle cable in the adjustable handlebar extension.

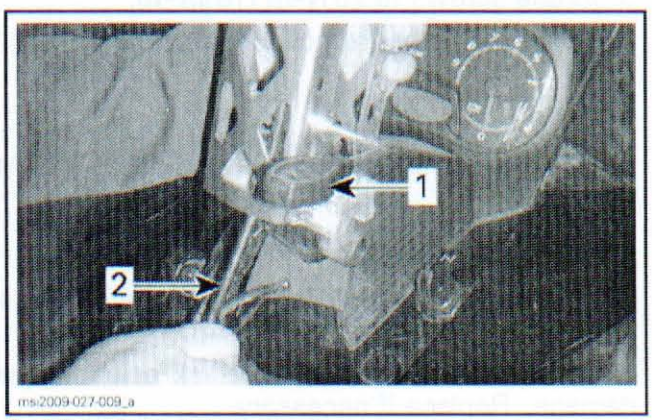

1. *Adjustable handlebar extension*
2. *Throttle cable*

www.midwestmanuals.com

2. Secure adjustable handlebar extension to steering column.

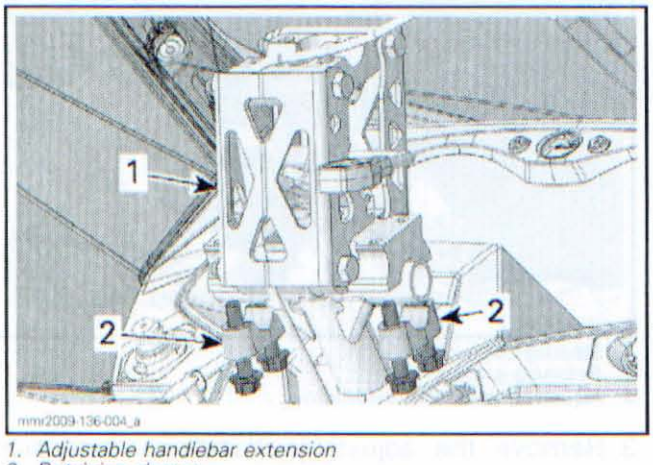

1. Adjustable handlebar extension
2. Retaining clamps

NOTE: Make sure adjustable extension is well centered on steering column.

⚠ WARNING

Handlebar and it's components, settled in any position, must not get in contact with anything (windshield, fuel tank cap, etc.) when steering is turned.

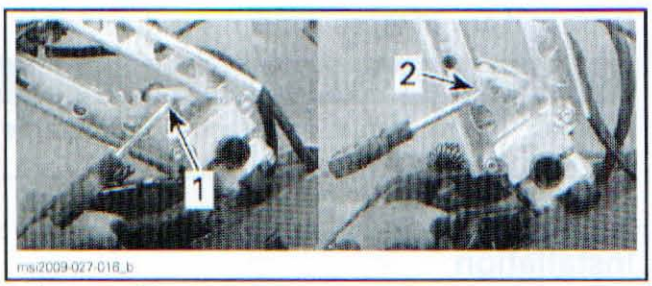

1. Lower position
2. Higher position

3. Torque screws to 25 N•m (18 lbf•ft).
4. Reinstall all other removed parts.

TIE-RODS

NOTE: The same procedure is applied on RH and LH side.

Tie-Rod Inspection

Check tie-rod ends for looseness. If play is excessive, replace tie-rod.

Check if the tie-rod is bend, crack or otherwise damage. Replace if necessary.

Tie-Rod Removal

1. Remove the tie-rod ends from the steering column and ski leg.

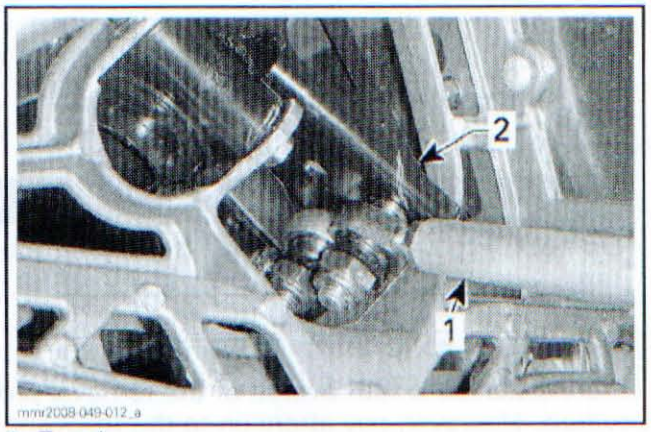

1. Tie-rod
2. Steering column

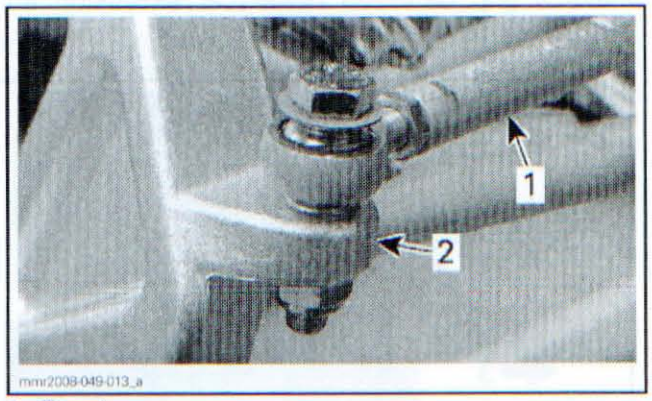

1. Tie-rod
2. Ski leg

2. Remove tie-rod from vehicle.

Tie-Rod Installation

The installation is the reverse of the removal procedure. However, pay attention to the following.

Adjust each tie-rod end length of both tie-rod ends to 30 mm ± 0.5 mm (1.181 in ± .02 in).

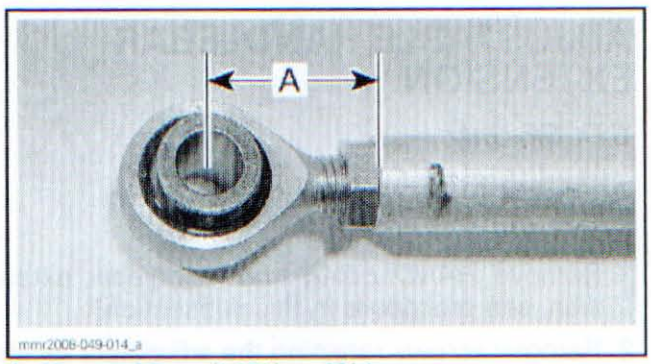

A. 30 mm ± 0.5 mm (1.181 in ± .02 in)

www.midwestmanuals.com

NOTE: The maximum tie-rod end length not engaged in the tie rod must not exceed 34 mm (1.339 in).

Install tie-rod with the groove on ski leg side.

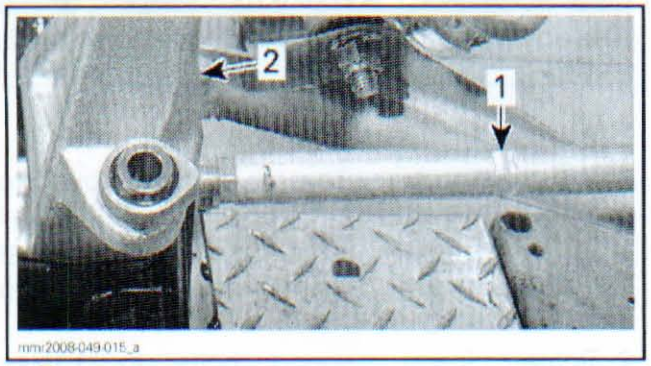

mmr2008-049-015_a

1. *Tie-rod groove*
2. *Ski leg*

On ski leg side, install hardened washers as shown.

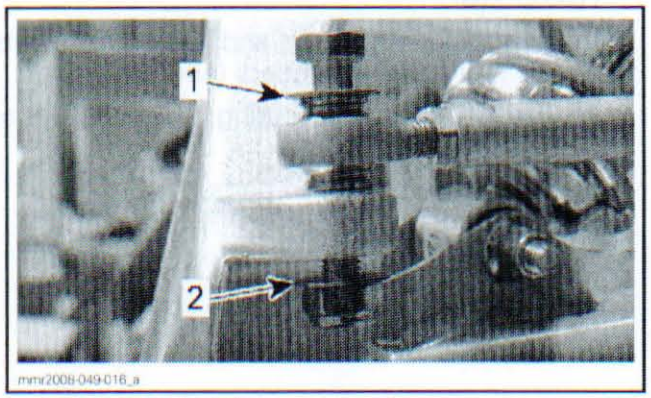

mmr2008-049-016_a

1. *Large hardened washer*
2. *Small hardened washer*

Install nuts retaining tie-rod ends. Torque them to 48 N•m (35 lbf•ft).

Perform the steering alignment, refer to *STEERING ALIGNMENT* in this subsection.

STEERING COLUMN

Steering Column Removal

1. Refer to *BODY* subsection to remove the following parts:
   - Seat(s)
   - RH side panel
   - Hood
   - Console.
2. Remove gauge support and console. Refer to *BODY* subsection.
3. Remove *HANDLEBAR EXTENSION* or *ADJUSTABLE HANDLEBAR EXTENSION* from steering column, see procedure in this subsection.
4. Remove screws securing steering column upper support.
5. Remove screws securing side frame members to rear frame member.

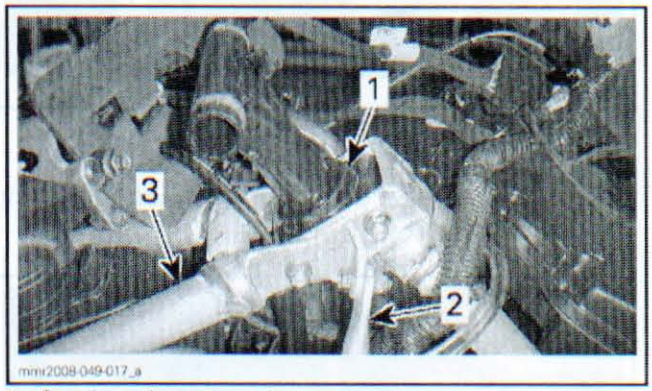

mmr2008-049-017_a

1. *Steering column support*
2. *RH side frame member*
3. *Rear frame member*

6. Remove seat.
7. Unscrew nuts retaining rear frame member and fuel tank to frame.

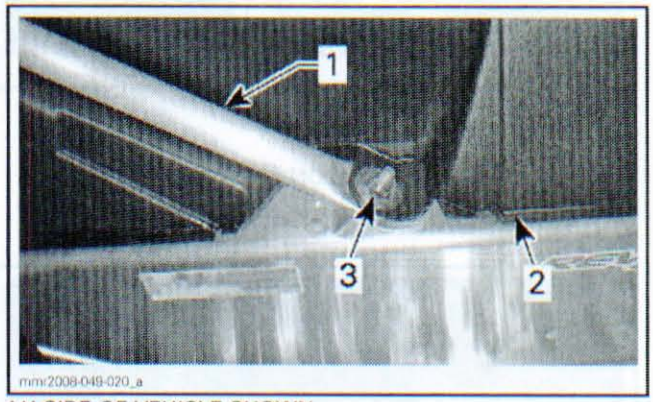

mmr2008-049-020_a

LH SIDE OF VEHICLE SHOWN

1. *Rear frame member*
2. *Fuel tank*
3. *Nut to remove*

8. Remove exhaust pipe. Refer to *EXHAUST SYSTEM* subsection.
9. Remove the tie-rod ends from the steering column.

www.midwestmanuals.com

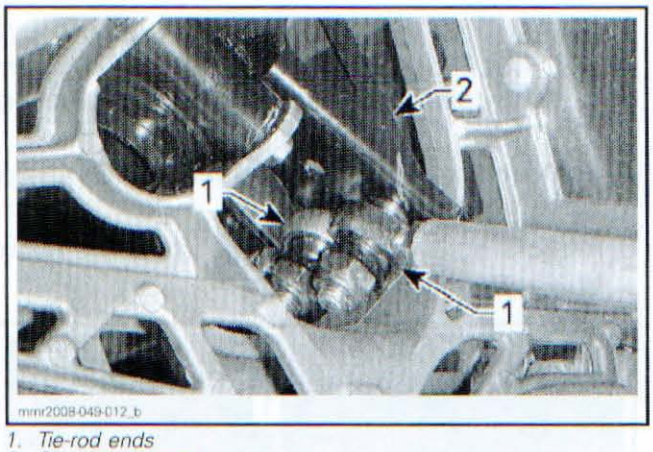

1. Tie-rod ends
2. Steering column

10. Remove screws securing the steering column lower support.

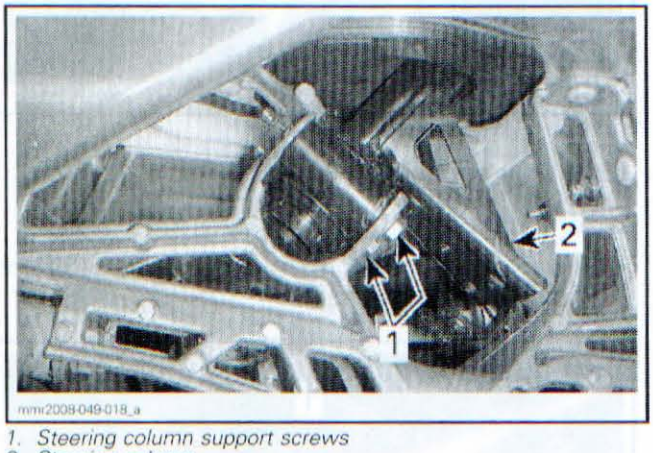

1. Steering column support screws
2. Steering column

11. Remove lower support.
12. Remove the steering column plate.

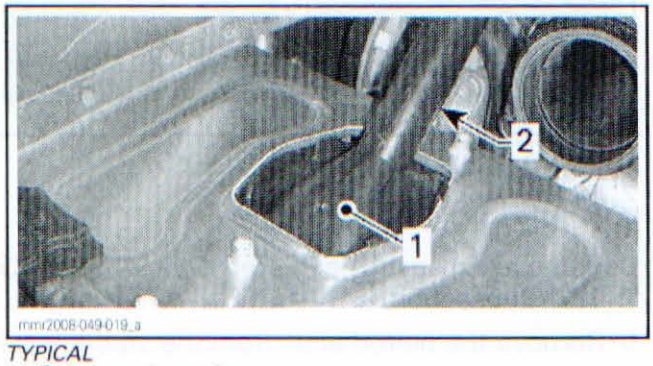

TYPICAL
1. Steering column plate
2. Steering column

13. Pull steering column from top.

Steering Column Inspection

Check if steering column is:
- Cracked
- Bent
- Twist
- Otherwise damaged.

Replace steering column if necessary.

⚠ WARNING

Do not try to repair a defective steering column.

Steering Column Installation

The installation is the reverse of the removal procedure. However, pay attention to the followings.

1. Apply THERMO LUBE SYNTHETIC GREASE (P/N 219 700 417) on vibration dampers before installing upper and lower supports.
2. Tighten lower support bolts to 10 N•m (89 lbf•**in**).
3. Install rear frame members.
4. Tighten the upper support bolts to 18 N•m (159 lbf•**in**).
5. Install shoulder bushings and **NEW** elastic nuts on the rear frame members (one each side).
6. Torque elastic nuts securing the fuel tank to 33 N•m (24 lbf•ft).
7. Install all other removed parts.

www.midwestmanuals.com

BODY

SERVICE TOOLS

Description	Part Number	Page
FUEL TANK NUT WRENCH	529 035 891	458
SUPERTITANIUM DRILL BIT 3/16"	529 031 800	456

SERVICE TOOLS – OTHER SUPPLIER

Description	Part Number	Page
ARROW ELECTRIC TACKER GUN	ETFX50	461
ARROW HEAVY DUTY TACKER GUN	T50	461

SERVICE PRODUCTS

Description	Part Number	Page
LOCTITE 767 (ANTISEIZE LUBRICANT)	293 800 070	463

GENERAL

CLEANING

Seat Cleaning

It is recommended to clean the seat with a solution of warm soapy water, using a soft clean cloth.

NOTICE Avoid use of harsh detergents such as strong soaps, degreasing solvents, abrasive cleaners, paint thinners, etc. that may cause damage to the seat cover.

Plastic Cleaning

Clean the vehicle thoroughly, removing all dirt and grease accumulation.

To clean use a soft clean cloth and either soapy water or isopropyl alcohol.

To remove grease, oil or glue use isopropyl alcohol.

NOTICE Do not apply isopropyl alcohol or acetone directly on decals.

NOTICE The following products must not be applied on the plastic components used on the vehicles:

- Gasoline
- Brake fluid
- Kerosene
- Diesel fuel
- Lighter fluid
- Varsol
- Naphtha
- Acetone
- Strong detergents
- Abrasive cleaners
- Waxes containing an abrasive or a cleaning agent in their formula.

Apply a non abrasive wax on glossy finish only.

BODY PARTS REPAIR

The very first step before repairing plastic materials is to find out exactly which type of material is involved.

www.midwestmanuals.com

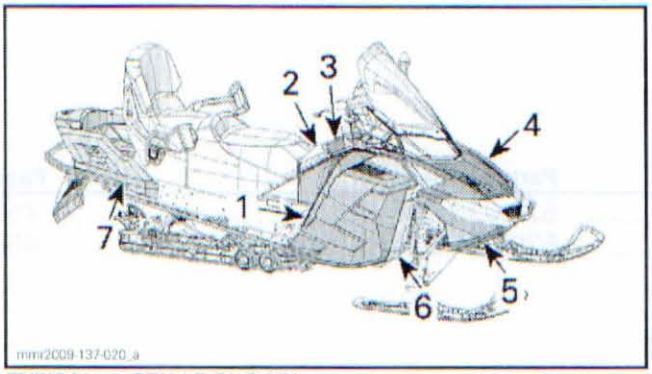

TYPICAL — GTX LE SHOWN

PLASTIC PARTS		
PARTS		MATERIAL
1	Side panel	Surlyn/popypropylene
2	Console	Surlyn
3	Gauge support	Polypropylene
4	Hood	Surlyn
5	Front bottom pan	Polypropylene
6	Side bottom pan	Polypropylene
7	Trunk	Polypropylene

NOTICE Some repair products are not compatible with certain plastics.

⚠ WARNING

Polycarbonate windshields must never be repaired by welding or otherwise.

The following company provides a complete line of products to repair plastic materials:

CREST INDUSTRIES, INC.
Trenton, MI 48183
Phone: 734 479-4141
Toll Free: 1 800 822-4100
Fax: 734 479-4040
E-Mail: info@crestauto.com
www.crestauto.com

PROCEDURES

DECAL

Decal Replacement

1. To remove a decal; heat old decal with a heat gun and peel off slowly.
2. Using isopropyl alcohol, clean the surface and dry thoroughly.
3. Apply liquid soap to new decal and carefully position the decal. Using a sponge or a squeegee, remove the air bubbles and surplus water working from the center toward the edges. Allow to air dry.

NOTICE Do not apply isopropyl alcohol or solvent directly on decals. Use only in a well ventilated area.

SIDE PANEL

Side Panel Removal

NOTE: The same procedure applies for RH or LH side.

1. Stretch and unhook the latches.

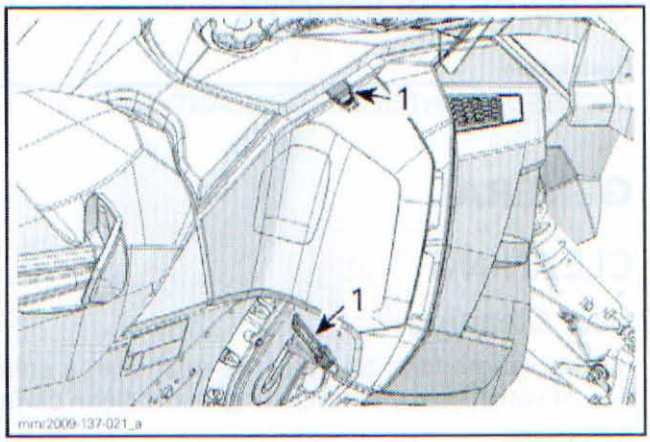

1. Latches

2. Open side panel.
3. Lift up the side panel and move the lower and center hinges out of its slots.
4. Free the upper hinge from its slot by lowering the side panel.

Side Panel Installation

Insert the 3 hinges in side bottom pan holes.

www.midwestmanuals.com

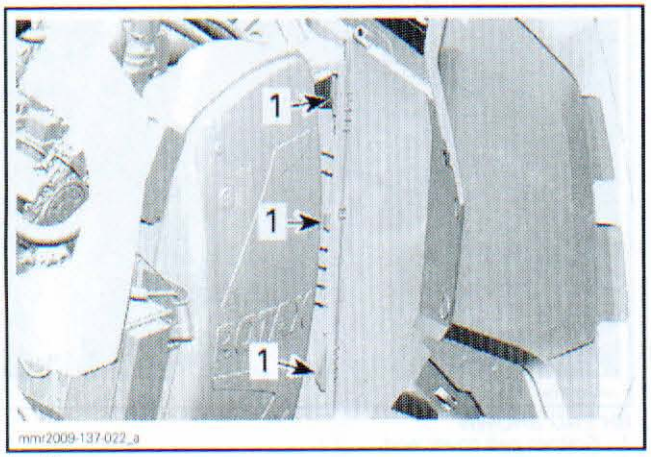

1. Hinges

Make sure the front top triangle is inserted correctly under side bottom pan.

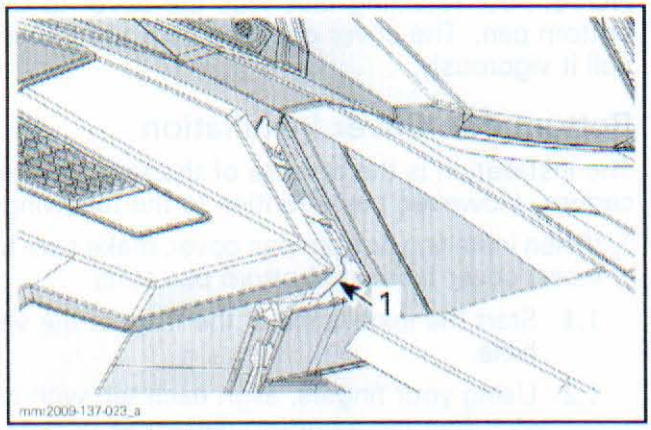

1. Front top triangle

Insert the rear tab under console.

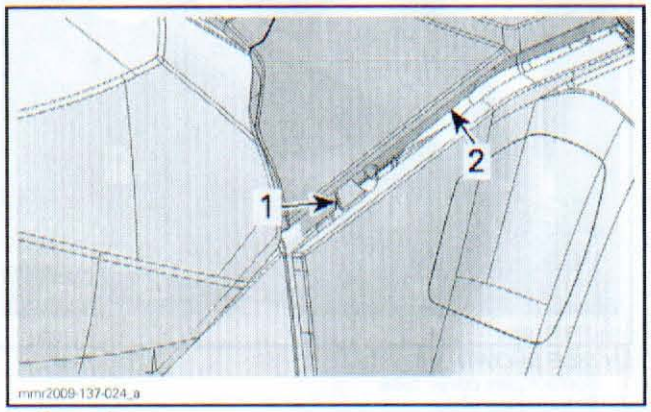

1. Rear tab
2. Console

Attach both latches.

HOOD

Hood Removal



1. Hood

1. Pull up the rear end of the hood on both sides until it is disengaged from the console.
2. Lift the rear end of the hood until it disengages from the bottom pan.

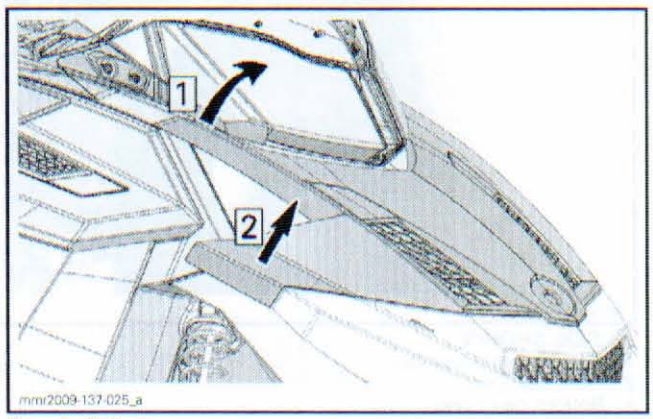

Step 1: Pull up
Step 2: Lift

3. Lift the hood to disengage it from the bottom pan cover.

Hood Installation

The installation is the reverse of removal procedure. However, pay attention to the following.

Position the hood hook in bottom pan cover hole then flip the hood in place.

www.midwestmanuals.com

BOTTOM PAN COVER

Bottom Pan Cover Removal

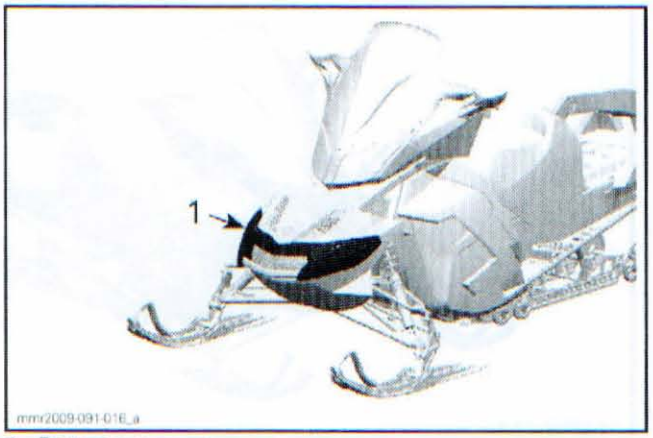

1. Bottom pan cover

1. Lower both locks located under the front bumper.

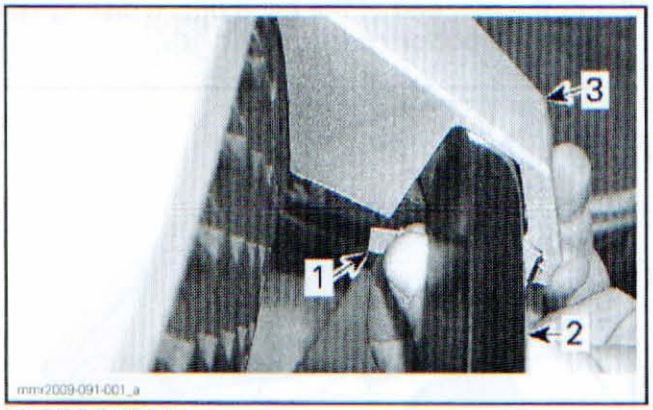

LH SIDE SHOWN
1. Bottom pan cover lock
2. Front bumper
3. Bottom pan cover

2. Pull locks toward the front of vehicle.

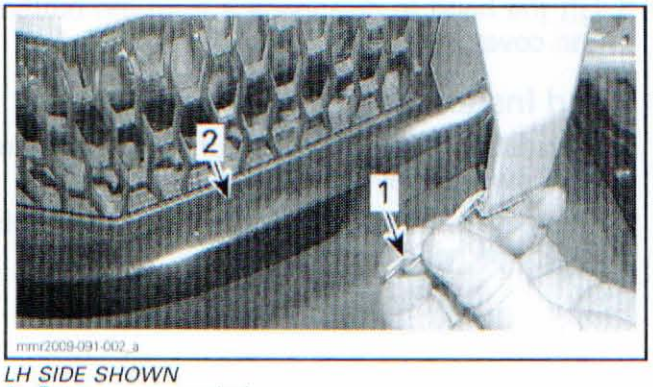

LH SIDE SHOWN
1. Bottom pan cover lock
2. Front bumper

3. Move the ends of cover away to release cover tabs.

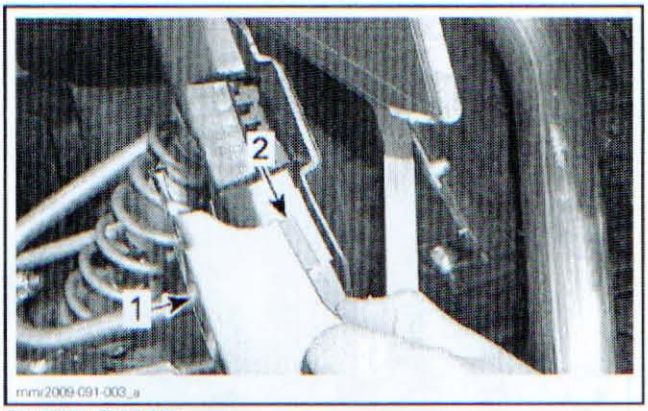

RH END SHOWN
1. Bottom pan cover end
2. Cover tab

4. Hold both ends of the cover and pull the cover in your direction.

NOTE: Four retaining tabs lock the cover to the bottom pan. The cover could be hard to remove, pull it vigorously.

Bottom Pan Cover Installation

The installation is the reverse of the removal procedure. However, pay attention to the following.

1. When installing bottom pan cover, make sure to insert cover tabs into bottom pan slots.
   1.1 Start the installation at the front of the vehicle.
   1.2 Using your fingers, align each tab with its slot then push bottom pan cover.

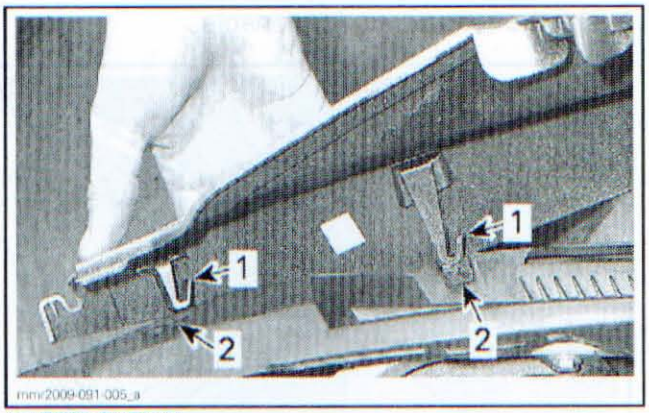

LH SIDE SHOWN
1. Bottom pan cover tabs
2. Bottom pan slots

2. Replace front locks in their original position.
3. Insert both cover tabs in their slots.

www.midwestmanuals.com

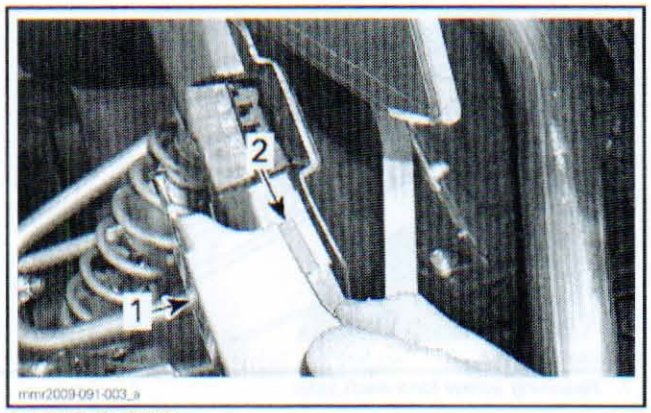

RH END SHOWN
1. *Bottom pan cover end*
2. *Cover tab*

FRONT BUMPER

Front Bumper Removal

1. Remove *HOOD* and *BOTTOM PAN COVER*, see procedures in this subsection.
2. Remove screws securing front bumper to frame.

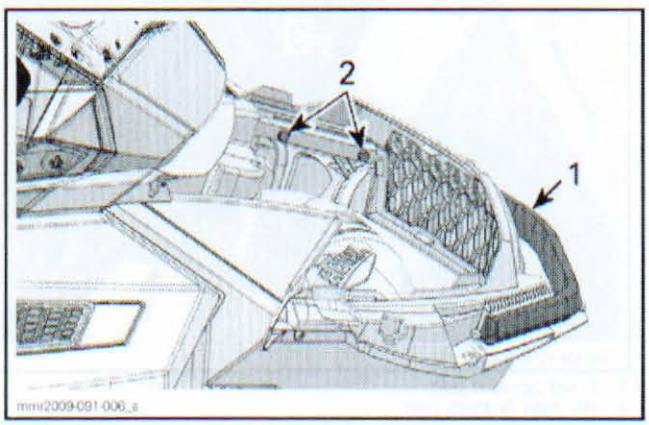

1. *Front bumper*
2. *Front bumper screws*

3. Remove bumper from vehicle by pulling it toward the front of vehicle.

Front Bumper Installation

1. Install bumper on vehicle. Position the narrow flat side on top.

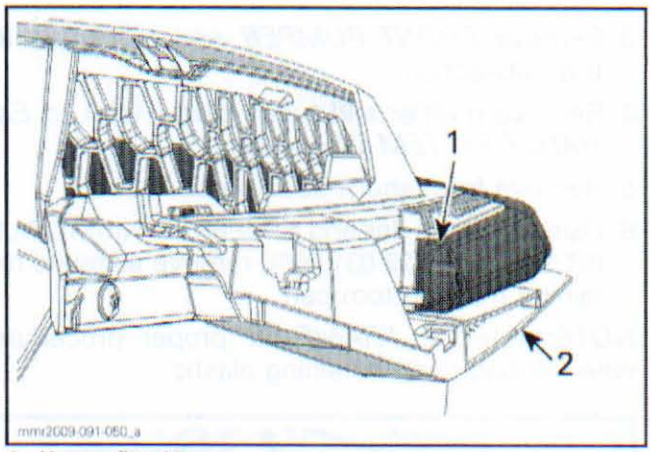

1. *Narrow flat side*
2. *Bottom pan*

2. Tighten bumper screws to 10 N•m (89 lbf•**in**).
3. Install bottom pan cover and hood.

FRONT BOTTOM PAN

Front Bottom Pan Removal

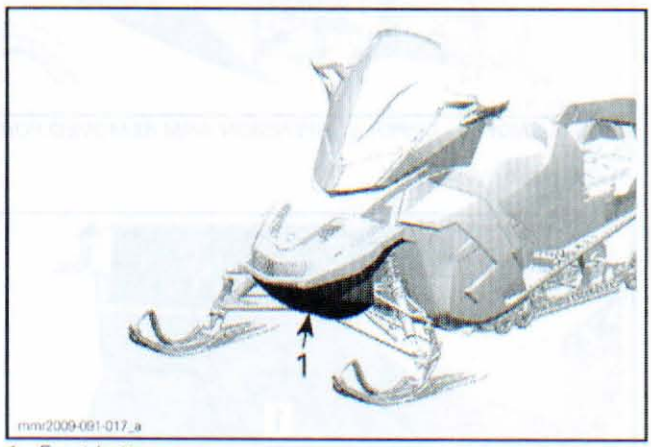

1. *Front bottom pan*

1. Lift front of vehicle until skis are off the ground.
2. Place the front portion of frame on a wooden box to support it securely.

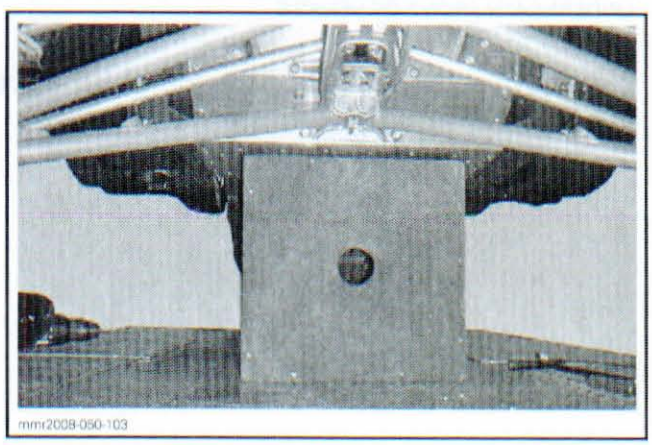

www.midwestmanuals.com

3. Remove *FRONT BUMPER*, see procedure in this subsection.
4. Remove muffler and tuned pipe. Refer to *EXHAUST SYSTEM* subsection.
5. Remove front shock absorbers.
6. Using an angle drill and a SUPERTITANIUM DRILL BIT 3/16" (P/N 529 031 800), remove all rivets retaining front bottom pan.

NOTE: Refer to *FRAME* for proper procedure when drilling rivets retaining plastic.

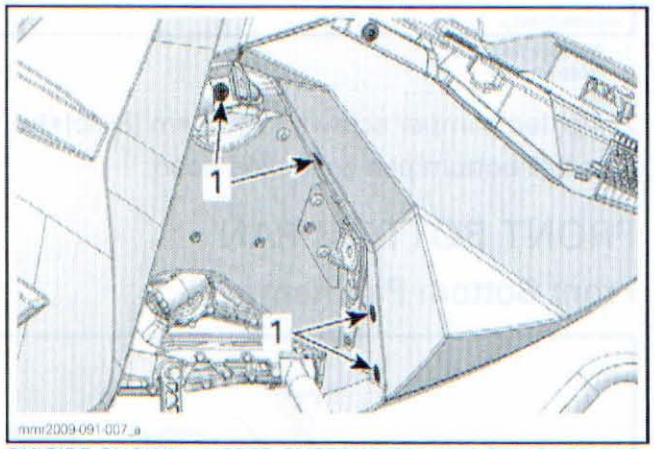

RH SIDE SHOWN - UPPER SUSPENSION ARM REMOVED FOR CLARITY
1. Drill these rivets

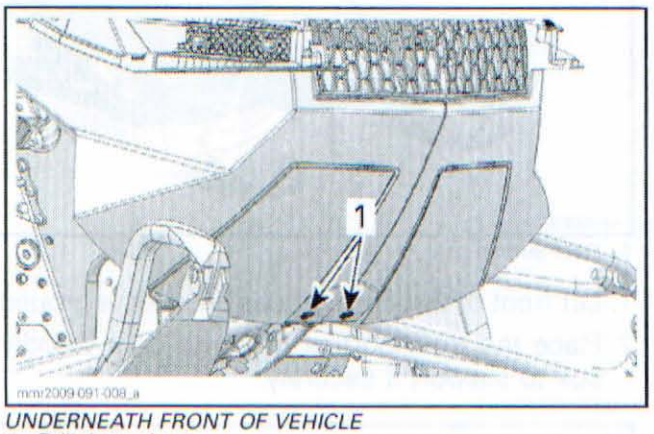

UNDERNEATH FRONT OF VEHICLE
1. Drill these rivets

7. Remove screws securing the top of front bottom pan.



1. Retaining screw (one each side)

8. Remove bottom pan.

Front Bottom Pan Installation

The installation is the reverse of removal procedure. However, pay attention to the following.

Above shock absorber upper bracket, install the front bottom pan behind the side bottom pan to have a good fit.

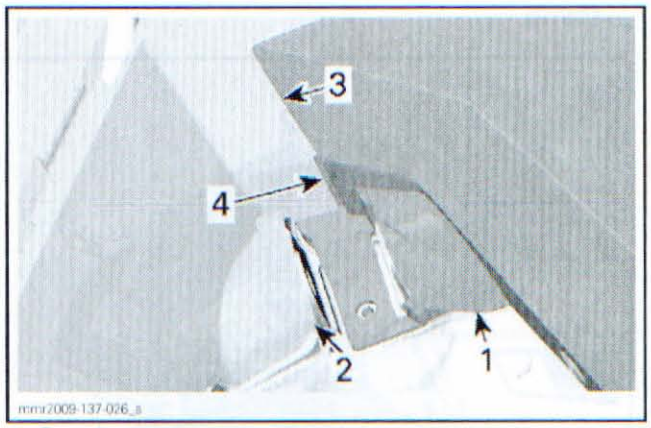

1. Front bottom pan
2. RH side bottom pan
3. Front bottom pan over side bottom pan
4. Front bottom pan behind side bottom pan

WINDSHIELD

Windshield Removal

Place your hands on each side of windshield.

Pull the windshield until its pins come out of rubber grommets.

NOTE: On **GSX and GTX LE**, free both deflectors first by pulling them vertically outside of vehicle.

www.midwestmanuals.com

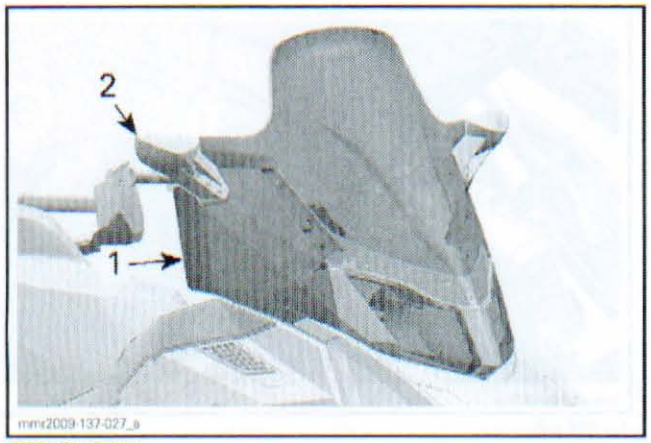

GTX SHOWN
1. *Windshield deflector*
2. *Mirror*

Under headlights, disengage the tab inserted in the gauge support slot.

Windshield Installation

The installation is the reverse of removal procedure.

NOTE: Make sure not to push grommets through gauge support holes.

GAUGE SUPPORT

Gauge Support Removal

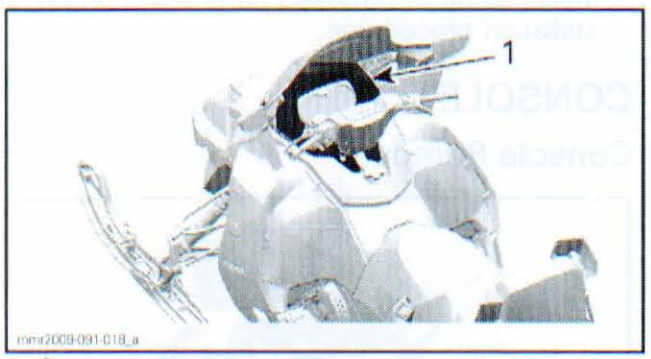

1. *Gauge support*

1. Remove *WINDSHIELD*, see procedure in this subsection.
2. Remove *CONSOLE*, see procedure in this subsection.
3. Remove the multifunction gauge. Refer to *LIGHTS, GAUGE AND ACCESSORIES* subsection.
4. Unplug headlight connectors.
5. Remove screws securing the gauge support.

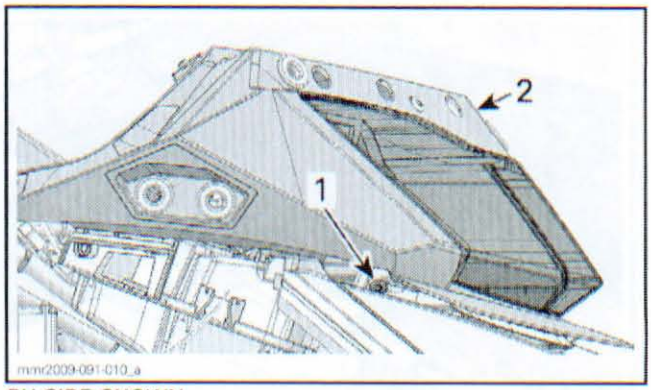

RH SIDE SHOWN
1. *Retaining screw*
2. *Gauge support*

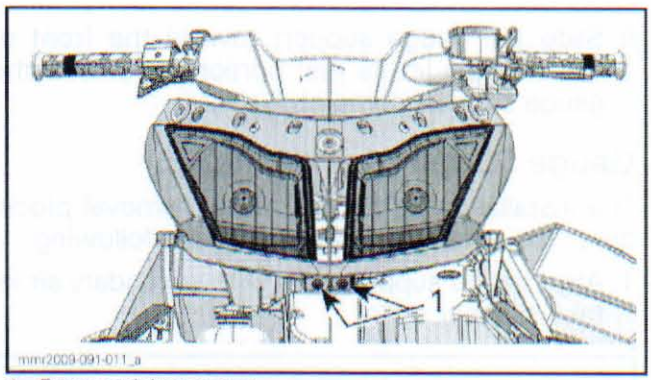

1. *Front retaining screws*

6. On so equipped models, unplug the 12-volt power outlet, the D.E.S.S. post and the visor outlet.
7. On LH and RH sides, press and hold the tabs securing gauge support to secondary air intake silencer.

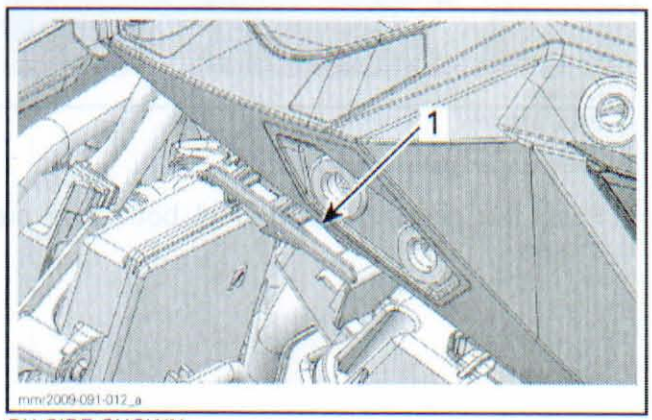

RH SIDE SHOWN
1. *Press this tab*

www.midwestmanuals.com

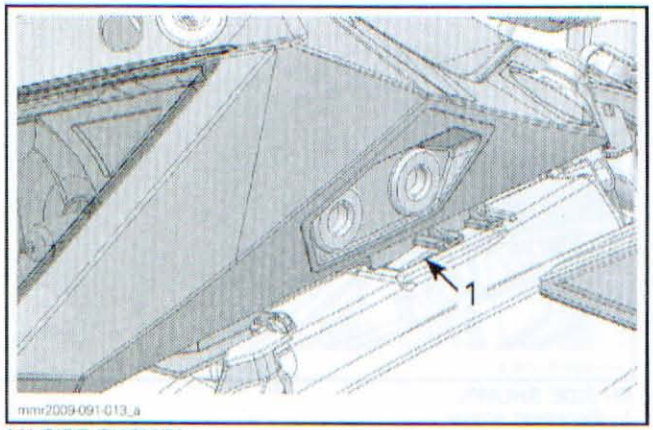

LH SIDE SHOWN
1. Press this tab

8. Slide the gauge support toward the front of vehicle then lift its rear portion to remove the gauge support completely.

Gauge Support Installation

The installation is the reverse of removal procedure. However, pay attention to the following.

1. Align gauge support tabs with secondary air intake silencer slots.

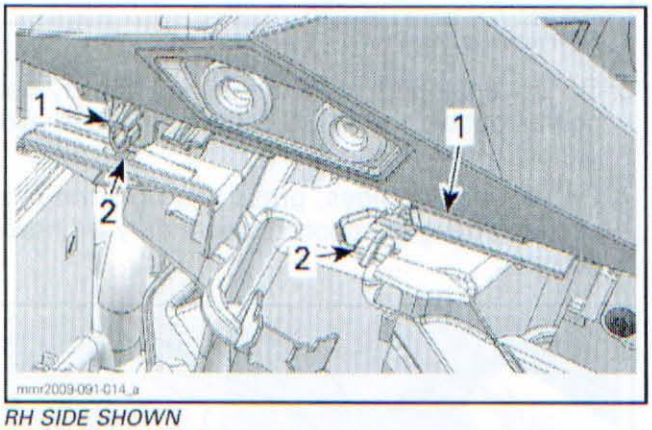

RH SIDE SHOWN
1. Gauge support tabs
2. Secondary air intake silencer slots

2. Push the gauge support until both tabs are locked.

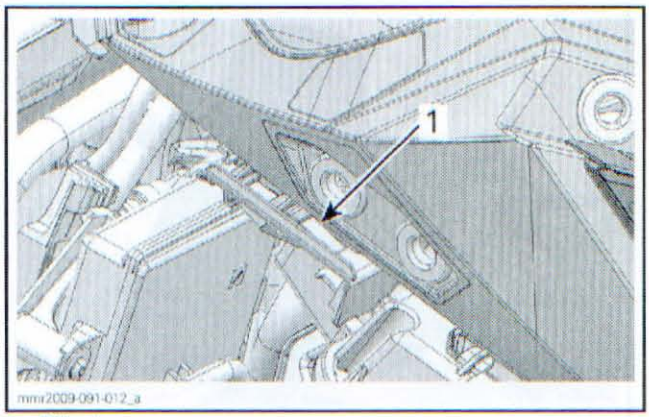

1. RH tab

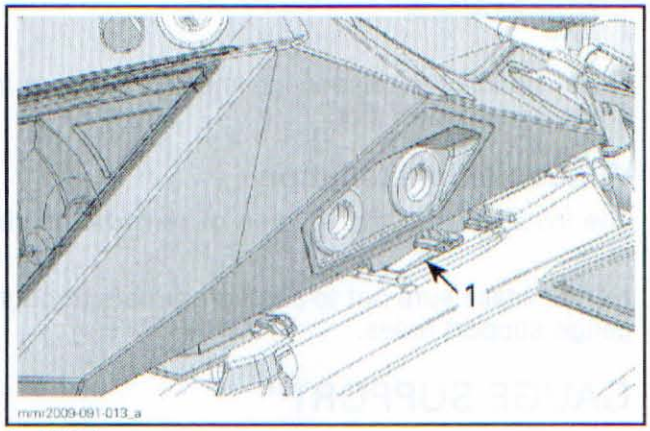

1. LH tab

3. Install all other removed parts using proper installation procedures.

CONSOLE

Console Removal



1. Console

1. Remove LH and RH side panels.
2. Remove seat.
3. Remove fuel tank cap.
4. Using the FUEL TANK NUT WRENCH (P/N 529 035 891), unscrew the fuel tank nut.

www.midwestmanuals.com

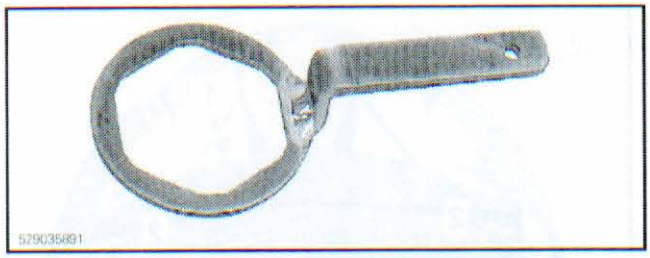

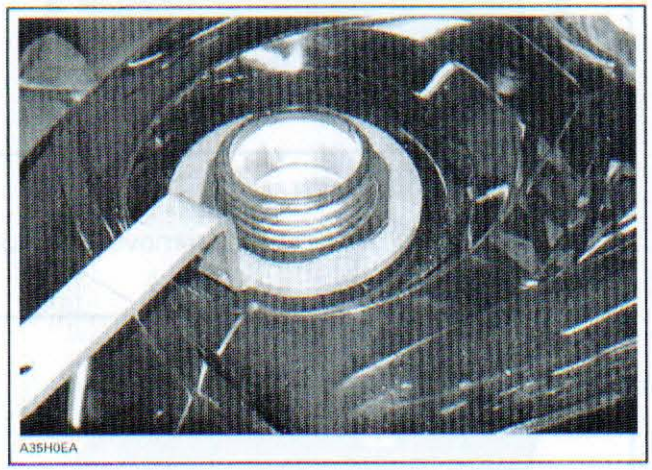

5. Unclip the front ends of console from the air intake silencer.
6. Lift up the rear of console and slide it toward the rear of the vehicle.
7. Install fuel tank cap.

Console Installation

The installation is the reverse of removal procedure.

REAR RACK

GSX Limited and GTX LE/SE

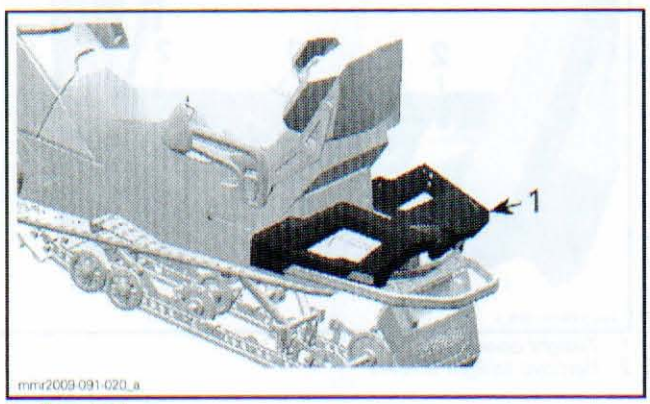

1. Rear rack

Rear Rack Removal

1. Remove saddlebags and tunnel bag (**GTX SE only**).
2. Remove passenger's seat.
3. Drill rivets (4) securing the radiator cover.

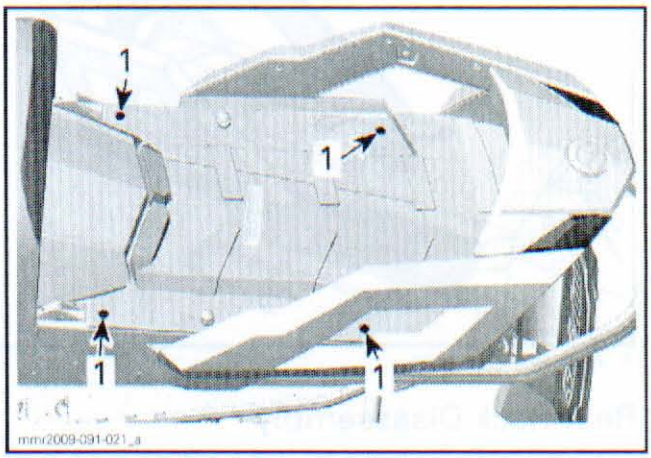

1. Radiator cover rivets

4. Remove the rear bumper.

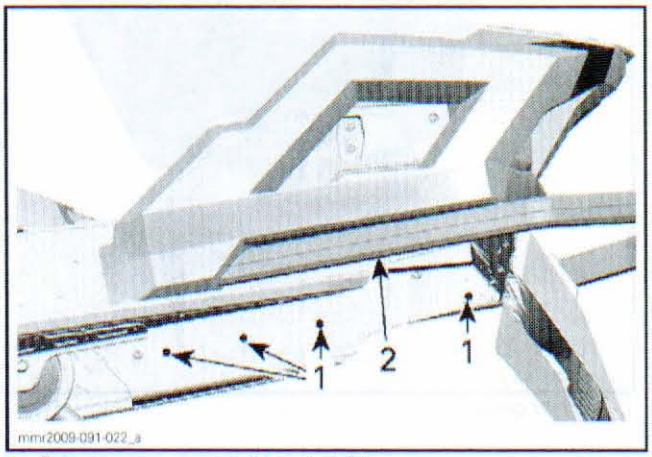

1. Rear bumper screws (4 each side)
2. Rear bumper

5. Remove screws (6) securing the rear rack assembly to tunnel.

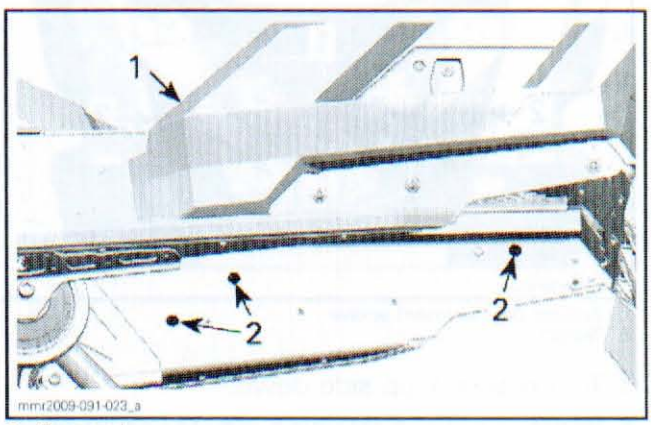

1. Rear rack
2. Rear rack screws (3 each side)

6. Remove rear rack.

www.midwestmanuals.com

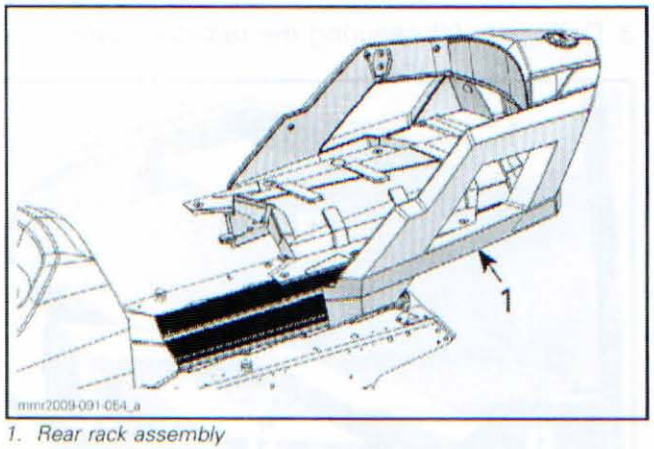

1. *Rear rack assembly*

Rear Rack Disassembly

1. Remove the taillight cover by pulling up the rear end of cover.

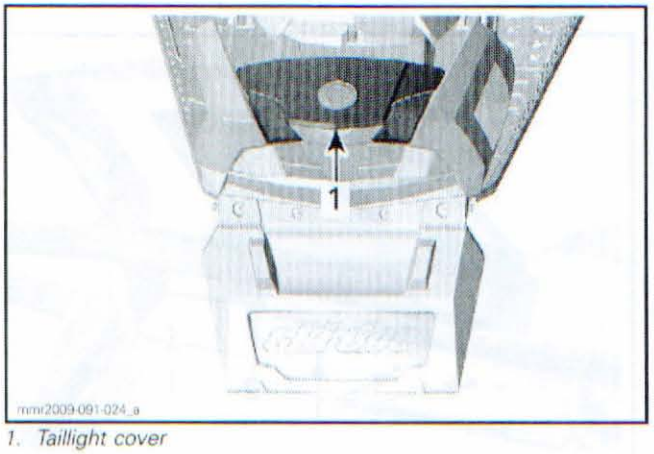

1. *Taillight cover*

2. Remove screw securing taillight compartment to radiator cover.

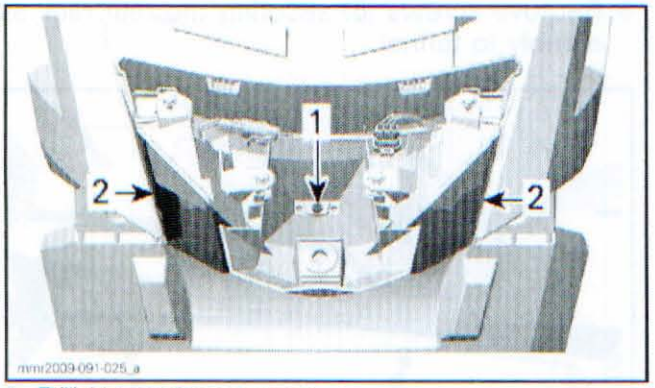

1. *Taillight compartment screw*
2. *Taillight*

3. Turn rear rack up side down.
4. Remove screws retaining radiator cover to rear rack arms.

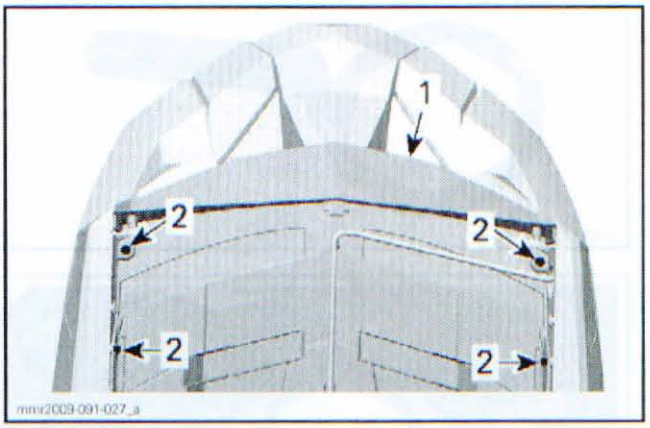

1. *Radiator cover*
2. *Retaining screws*

5. Detach taillight harness to remove radiator cover.

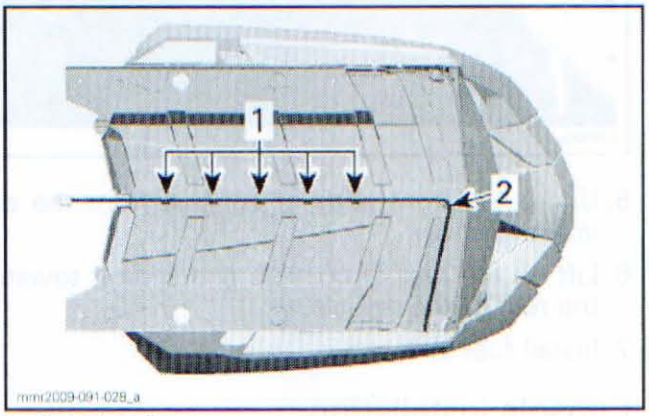

1. *Retaining clips*
2. *Taillight harness*

6. Unplug taillight connectors.
7. Remove screws securing taillight, rack arms and taillight compartment together.

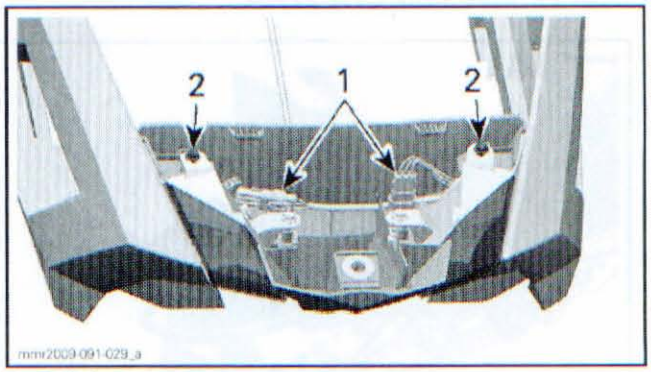

1. *Taillight connectors*
2. *Remove taillight screws*

8. Pull harness inside taillight compartment and separate parts.

Rear Rack Assembly and Installation

The assembly/installation is the reverse of the disassembly and removal procedures.

www.midwestmanuals.com

SEAT COVER

Seat Cover Removal

Operator's Seat

1. Remove seat.
2. Turn seat upside down.
3. Remove seat cover staples.
4. Remove seat cover and foam.

Passenger's Seat

1. Remove *BACKREST ARMS*, see procedure in this subsection.
2. Unplug the 4-pin connector (heating seat).
3. Remove plastic spacer.

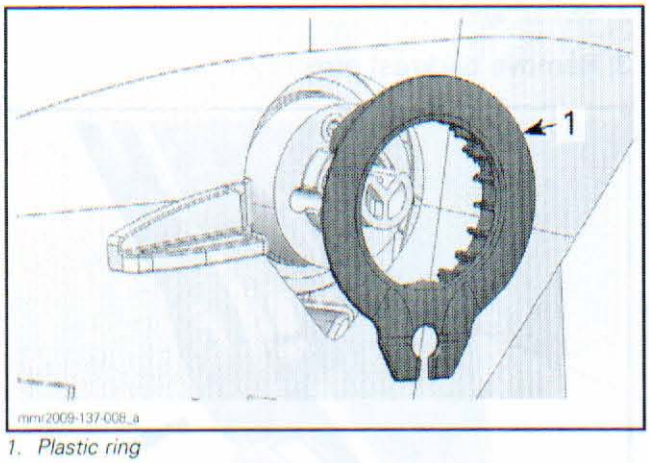

1. Plastic ring

4. Remove seat cover staples.
5. Remove seat cover and foam.

Seat Cover Installation

The installation is the reverse of the removal procedure. However, pay attention to the following.

Install 1/4" staples with an electric tacker such as the ARROW ELECTRIC TACKER GUN (P/N ETFX50) or with a manual tacker such as the ARROW HEAVY DUTY TACKER GUN (P/N T50).

NOTE: For an easier installation, it is highly recommended to use an electric tacker gun.

After seat cover installation, cut all around the excess of material.

PASSENGER'S HANDHOLDS

Passenger's Handhold Removal

1. Remove passenger's seat.
2. Under seat unplug connectors.
   - For LH handhold the 14-pin connector.
   - For the RH handhold the 3-pin connector (heating grip).
3. Unscrew the appropriate handhold knob.

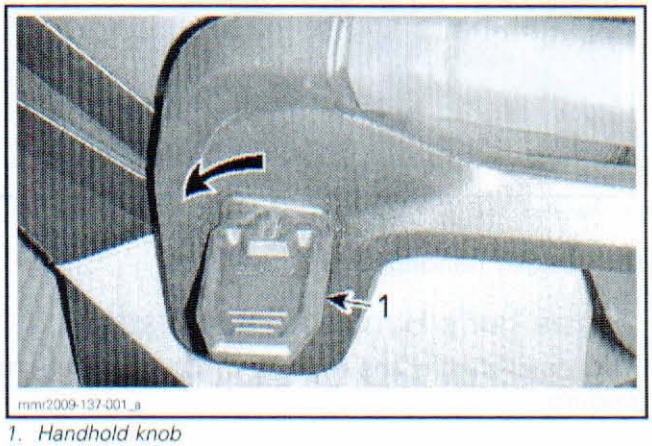

1. Handhold knob

4. Move harness out of plastic ring.

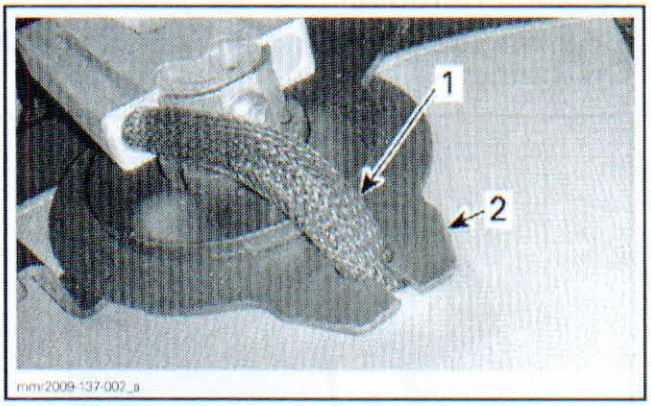

1. Harness
2. Plastic ring

5. Turn plastic ring and remove connector from seat.

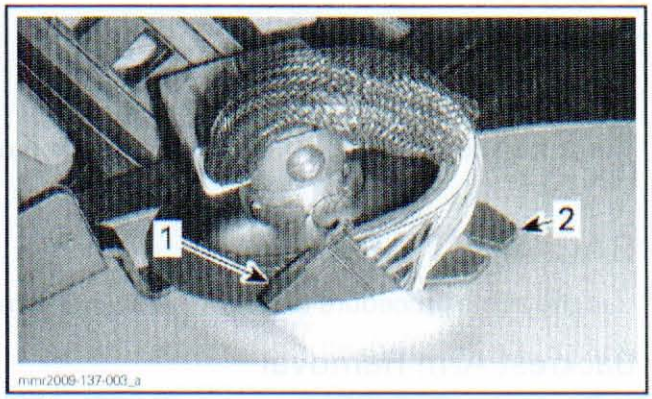

1. Connector
2. Plastic ring

6. Unscrew the handhold link retaining screw.

www.midwestmanuals.com



1. Handhold link

7. Remove handhold.

Passenger's Handhold Installation

The installation is the reverse of the removal procedure.

BACKREST

Backrest Removal

1. Remove screws securing the backrest to backrest arms.

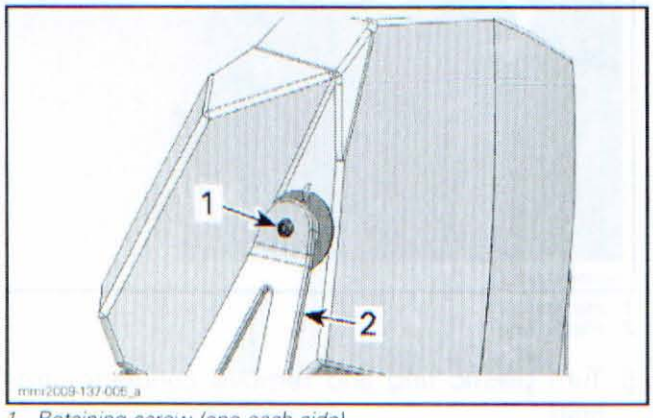

1. Retaining screw (one each side)
2. Backrest arm

2. Remove the backrest.

Backrest Installation

The installation is the reverse of the removal procedure.

BACKREST ARMS

Use the same procedure to remove the other arm.

Backrest Arm Removal

1. Remove *BACKREST* and *PASSENGER'S HANDHOLDS*, see procedure in this subsection.
2. Remove both screws that attach backrest arm to backrest support.

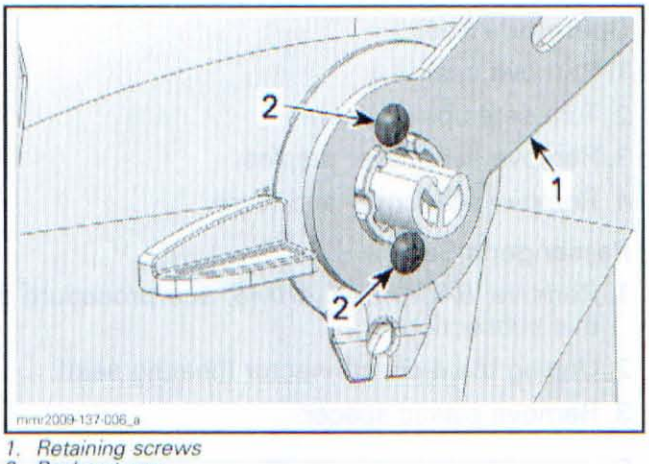

1. Retaining screws
2. Backrest arm

3. Remove backrest arm.

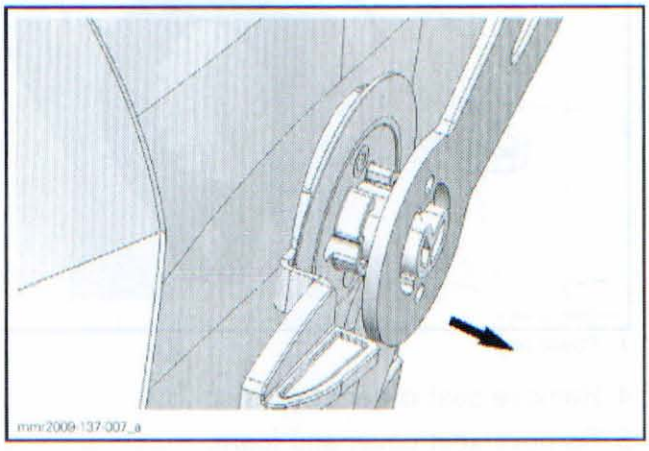

Installation

The installation is the reverse of the removal procedure.

BACKREST MECHANISM

Backrest Mechanism Removal

1. Drill rivets retaining plastic cover to backrest support. Remove plastic cover.

www.midwestmanuals.com

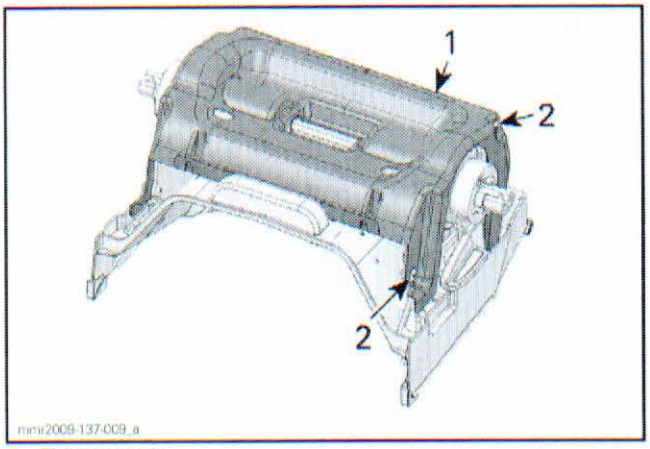

1. Plastic cover
2. Rivets (two each side)

2. Remove return spring.

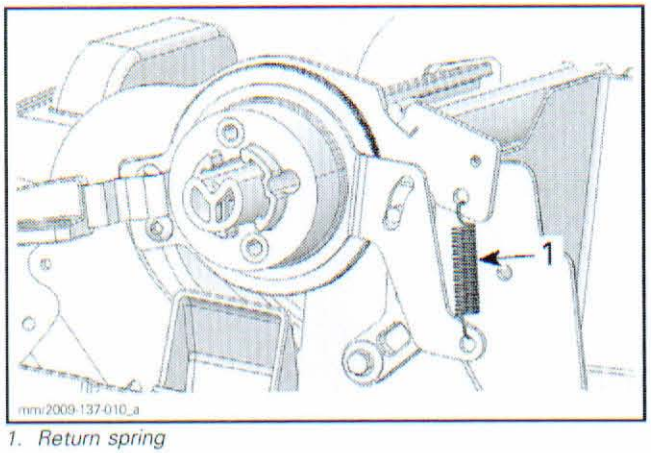

1. Return spring

3. To replace backrest handle or its gear, remove screws retaining handle assembly to support.

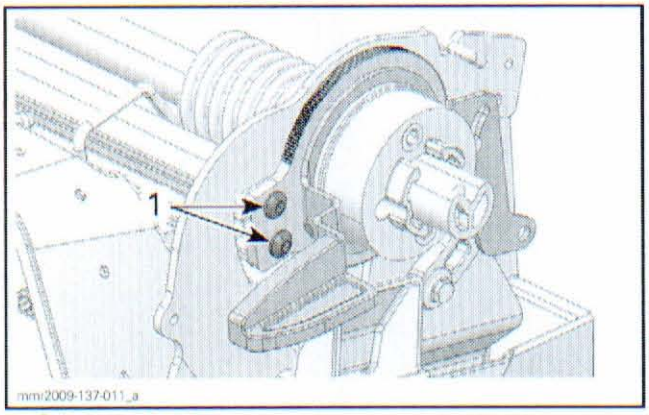

1. Retaining screws

4. Remove handle assembly.
5. Drill rivets retaining parts.

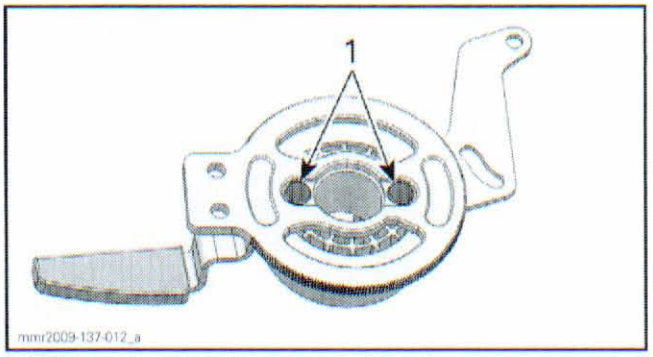

1. Rivets

Backrest Mechanism Installation

Apply LOCTITE 767 (ANTISEIZE LUBRICANT) (P/N 293 800 070) between moving parts of backrest mechanism.

Use a press and a punch to flatten rivet ends.

Reinstall all removed parts by reversing the removal procedure.

www.midwestmanuals.com

www.midwestmanuals.com

FRAME

SERVICE TOOLS

Description	Part Number	Page
SUPERTITANIUM DRILL BIT 3/16"	529 031 800	467

SERVICE PRODUCTS

Description	Part Number	Page
XP-S SYNTHETIC CHAINCASE OIL	413 803 300	467

www.midwestmanuals.com

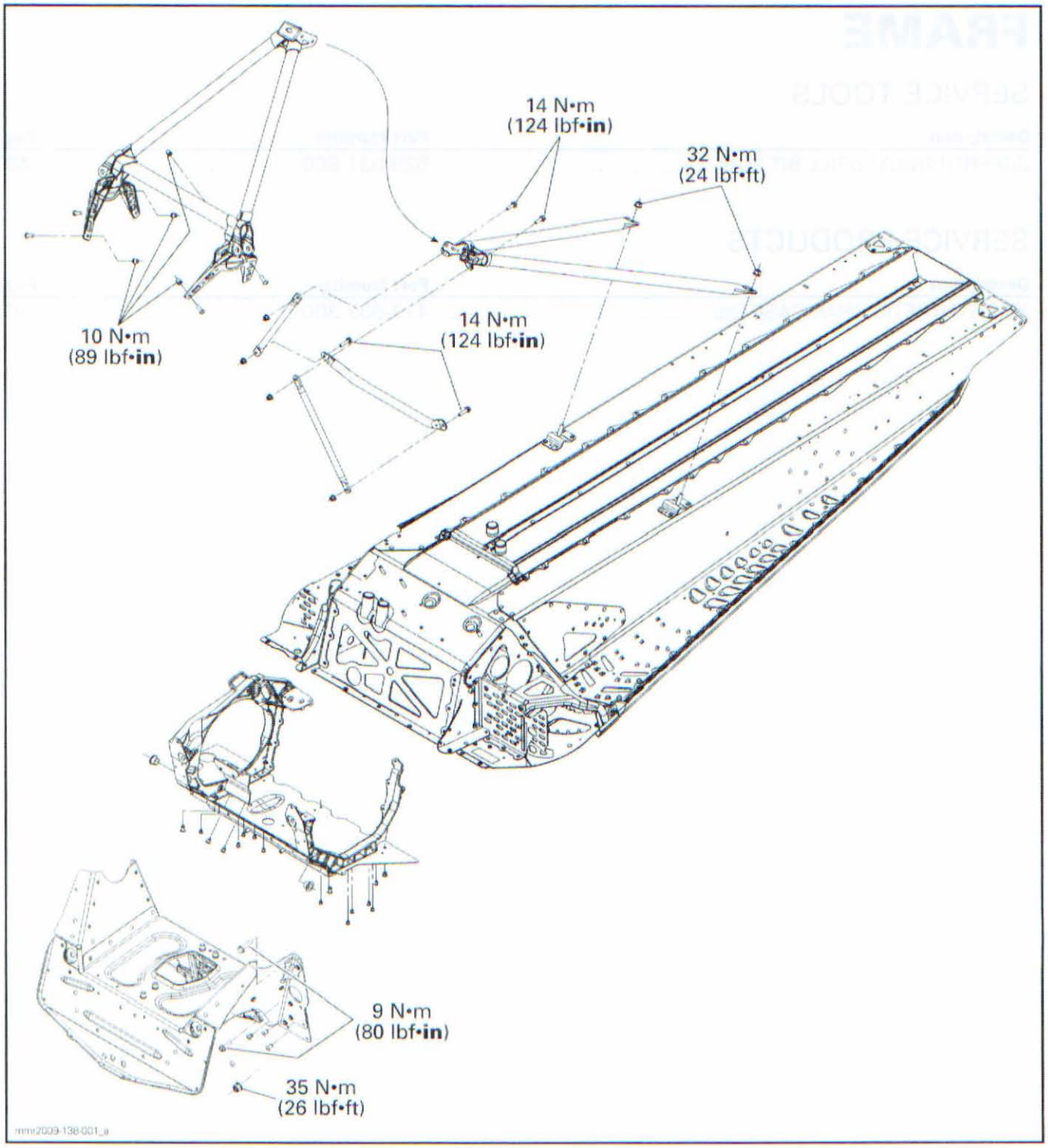

www.midwestmanuals.com

GENERAL

During assembly/installation, use the torque values and the service products as in the exploded view.

Clean threads before applying a threadlocker. Refer to *SELF-LOCKING FASTENERS* and *LOCTITE APPLICATION* at the beginning of this manual for complete procedure.

⚠ WARNING

Torque wrench tightening specifications must be strictly adhered to.
Locking devices (e.g.: locking tabs, elastic stop nuts, cotter pins, etc.) must be replaced with new ones.

Hoses, cables or locking ties removed during a procedure must be reinstalled as per factory standards.

RIVET DRILLING PROCEDURE

For proper drilling instructions and to prevent premature wear, follow the procedure below.

NOTICE When removing rivets, make sure do not enlarge or deform the holes.

Self-Percing Rivet

Recommended Method

1. Using a grinding disk, grind the rivet end.

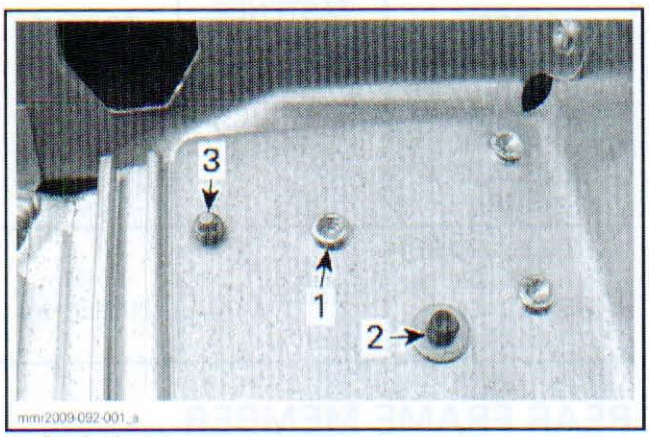

1. *Grind this side*
2. *Pop rivet*
3. *STAVEX rivet*

2. Support the frame around the rivet head with a socket on the opposite side to avoid warpage.

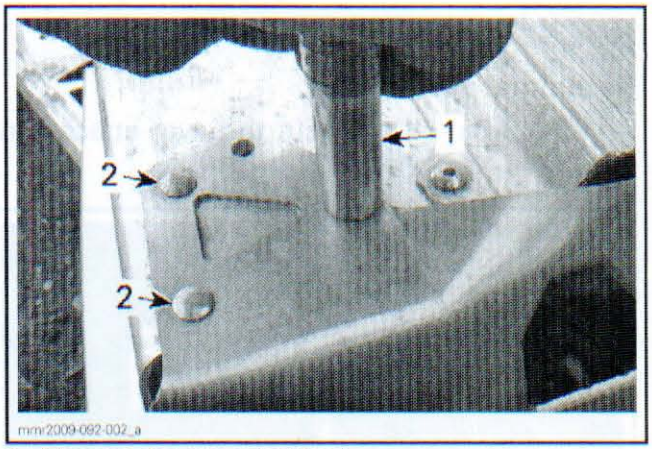

1. *11 mm socket over a rivet head*
2. *Rivet heads*

3. Drive out remaining rivet using a punch.

Alternative Method

1. Use the SUPERTITANIUM DRILL BIT 3/16" (P/N 529 031 800), shipped in packs of 2.
2. Partially drill **rivet end — not the rivet head**.
3. Always use a variable speed drill.

NOTICE High speed drilling will cause excessive heat which may destroy the cutting edge of the bit; therefore, avoid using pneumatic drills.

4. Maintain a slow to medium speed at all times when drilling. The proper speed is attained when a constant chip is ejected.

NOTE: To increase bit life, use XP-S SYNTHETIC CHAINCASE OIL (P/N 413 803 300) as a cutting oil.

5. Cut rivet using a chisel.
6. Remove riveted part.
7. Drive out remaining rivet head using a punch.

Pop Rivets

1. Use the SUPERTITANIUM DRILL BIT 3/16" (P/N 529 031 800), shipped in packs of 2.
2. Always use a variable speed drill.
3. Always drill **rivet head**.
4. Maintain a slow to medium speed at all times when drilling. The proper speed is attained when a constant chip is ejected.
5. When rivet is located on plastic part, use pliers to avoid rivet turning and heating plastic.
6. Use a small punch to push the rivet end.

www.midwestmanuals.com

HUCK Rivets

Recommended Method

1. Using a cut-off tool, cut the rivet attachment without touching the shoulder.

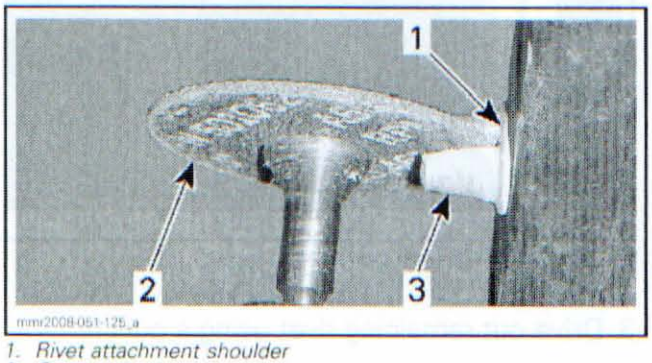

1. Rivet attachment shoulder
2. Cutter wheel
3. Rivet attachment

NOTE: Apply a thin layer of grease on cutter wheel to increase its durability.

2. Break the rivet attachment shoulder using a chisel.
3. Use a small punch to push the rivet stem.

Alternative Method

1. Measure outside diameter of rivet stem and select appropriate drill bit.
2. Drill the **rivet stem — not the rivet head** until rivet attachment is freed.
3. Always use a variable speed drill.
4. Maintain a slow to medium speed at all times when drilling. The proper speed is attained when a constant chip is ejected.

NOTE: When possible, use an angle grinder to grind rivet head or use an air hammer to cut the rivet attachment.

PROCEDURES

FRAME

Frame Cleaning

Clean frame and tunnel with appropriate cleaners and rinse with high pressure hose.

NOTE: For bare aluminum frames use only aluminum cleaner and follow instructions on container.

NOTICE Never direct high-pressure water jet towards decals. They will peel off.

Frame Welding

No welds should be done on aluminum frame except if mentioned or required on a BRP Bulletin.

REAR BUMPER

Rear Bumper Removal

1. Underneath tunnel, remove bolts retaining rear bumper to tunnel.

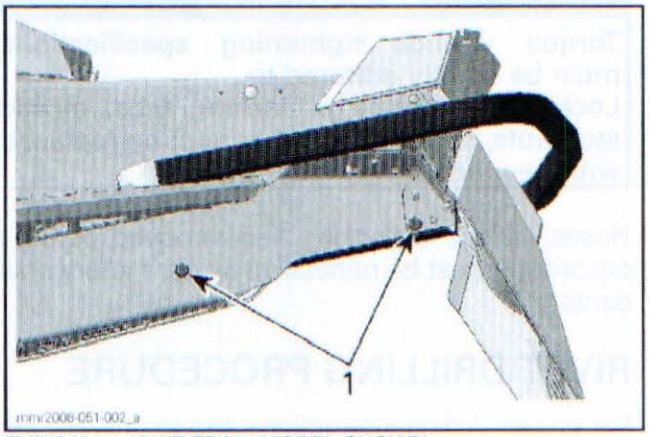

TYPICAL — MX Z TRAIL MODEL SHOWN
1. Rear bumper bolts on right side

2. Pull rear bumper to remove it from vehicle.

Rear Bumper Installation

The installation is the reverse of the removal procedure.

NOTE: Install all bolts before torquing them.

MODEL	FASTENER GRADE	TORQUE
GSX (LIMITED) MX Z (ALL EXCEPT RENEGADE X (EUR))	Grade 8.8	10 N•m (89 lbf•in)
GTX (LE AND SE) MX Z (RENEGADE X (EUR))	Grade 10.9	16 N•m (142 lbf•in)

REAR FRAME MEMBER

Rear Frame Member Removal

1. Refer to *BODY* subsection to remove the following:
   - Seat
   - Gauge support
   - Console.

www.midwestmanuals.com

2. Remove trim panel at the bottom of rear frame member (one each side).

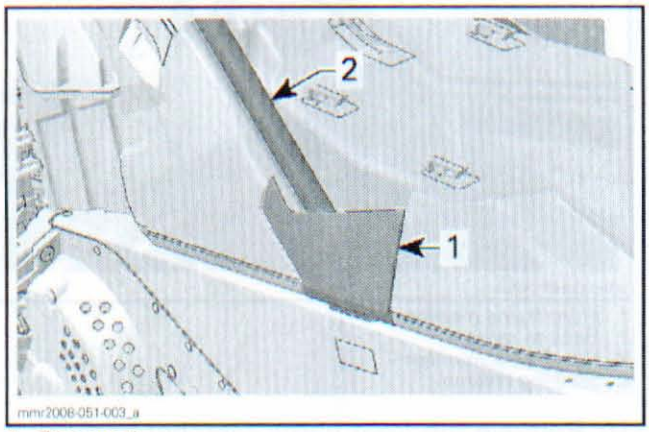

1. *Trim panel*
2. *Rear frame member*

3. Remove nut and shouldered washer securing rear frame member (one each side).

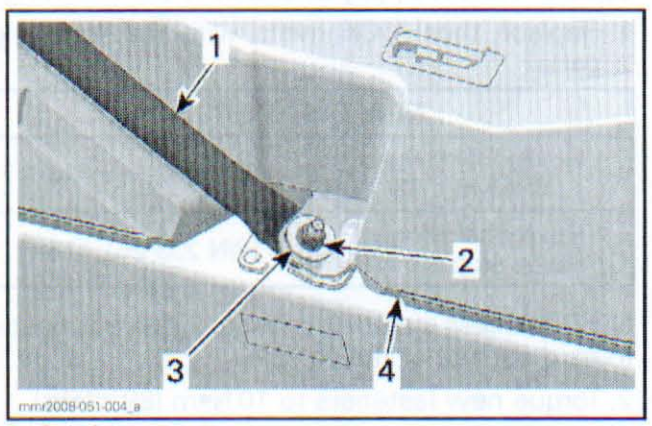

1. *Rear frame member*
2. *Nut to remove*
3. *Shouldered washer*
4. *Fuel tank*

4. Remove screws securing the rear frame member to steering column support and side frame members.

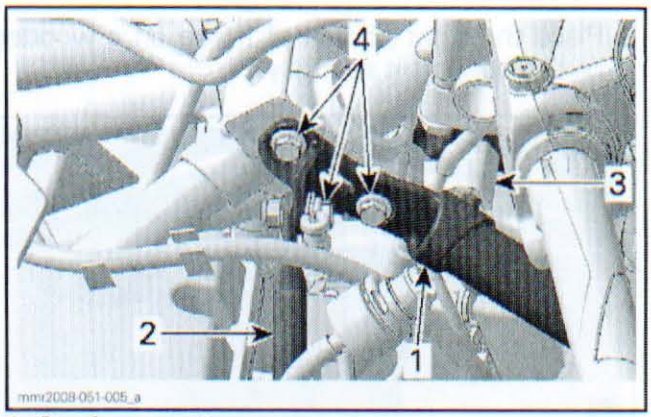

1. *Rear frame member*
2. *LH side frame member*
3. *Steering column support*
4. *Bolts to remove*

5. Remove rear frame member.

Rear Frame Member Installation

The installation is the reverse of the removal procedure.

NOTE: Install all bolts and nuts before tightening them.

FRONT FRAME MEMBER

Front Frame Member Removal

1. Refer to *BODY* subsection to remove the following:
   - Hood
   - Console
   - Gauge support.
2. Remove the exhaust pipe. Refer to *EXHAUST SYSTEM* subsection.
3. Remove bolts securing both bumper supports to front frame member.

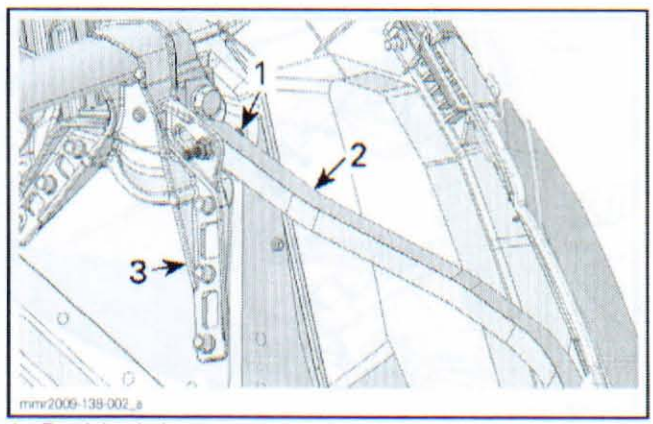

1. *Retaining bolt*
2. *LH bumper support*
3. *Front frame member*

4. Lift front of vehicle until skis are off the ground.

www.midwestmanuals.com

5. Place the front portion of frame on a wooden box to support it securely.

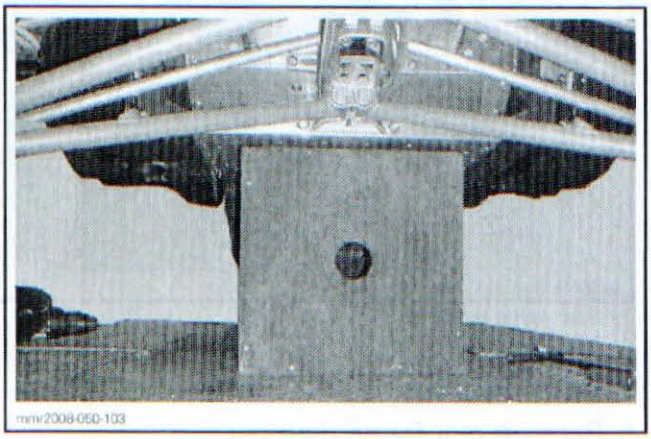

6. Remove front shock absorbers.
7. Drill the rivet retaining the front bottom pan to front frame member (one each side).

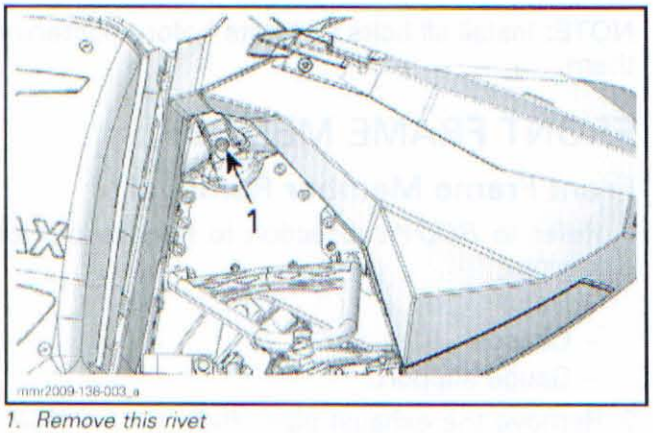

1. Remove this rivet

8. Remove HUCK rivets (six each side), see removal procedure at the beginning of this section.

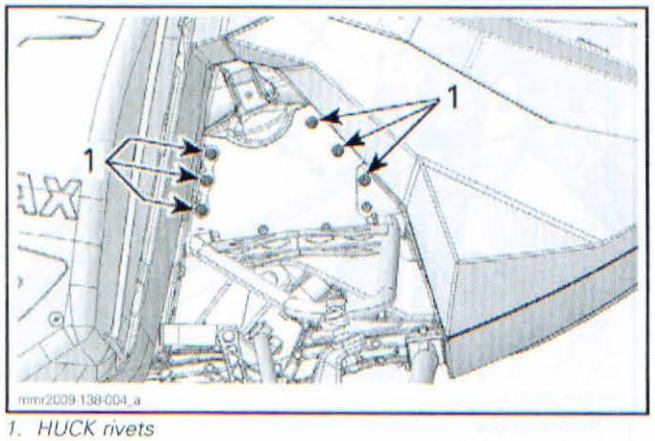

1. HUCK rivets

9. Remove bolts securing front frame member, rear frame member and steering column support.

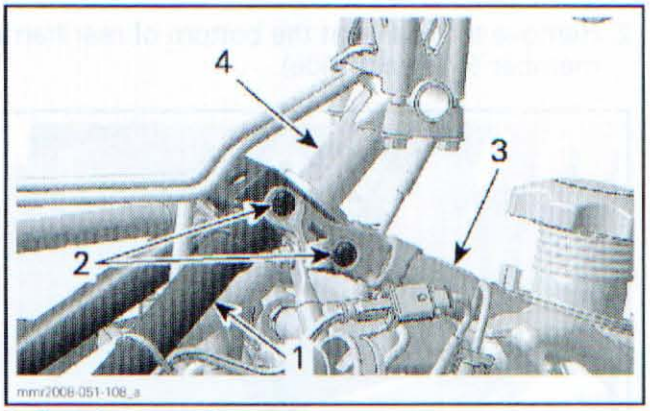

1. Front frame member
2. Bolts to remove
3. Rear frame member
4. Steering column

10. Remove the front frame member.

Front Frame Member Installation

The installation is the reverse of the removal procedure. However, pay attention to the following.

1. Replace the HUCK rivets with the following parts.

NEW FASTENERS	
Hexagonal flanged bolt M6 x 20	(P/N 207 662 044)
Hexagonal flanged elastic stop nut M6	(P/N 233 261 414)

NOTE: Unless stated otherwise, install bolt heads toward outside of the vehicle.

2. Torque new fasteners to 10 N•m (89 lbf•**in**).

FRONT CROSS MEMBER

Front Cross Member Removal

1. Lift front of vehicle until skis are off the ground.
2. Place the front portion of frame on a wooden box to support it securely.

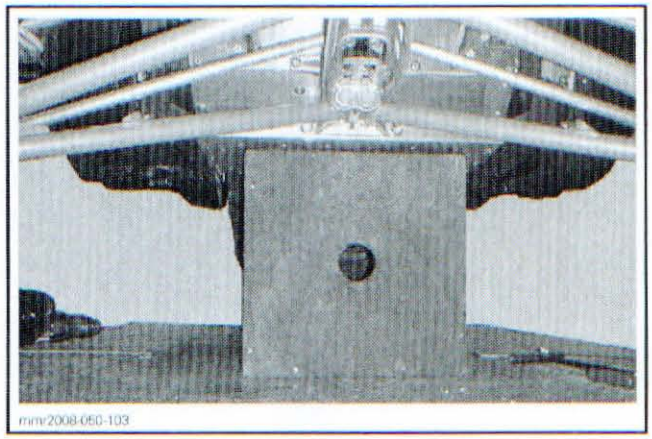

www.midwestmanuals.com

3. Remove the muffler and the tuned pipe. Refer to *EXHAUST SYSTEM* subsection.
4. Remove the RH front suspension assembly by doing the following:
   4.1 Detach tie-rod end from steering column.

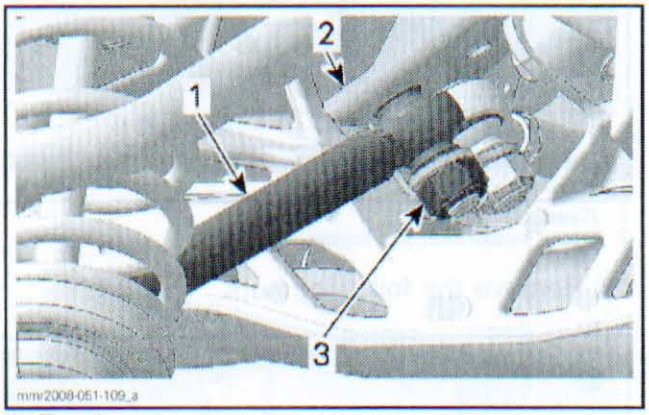

1. Tie-rod
2. Steering column
3. Tie-rod end nut

   4.2 Remove shock absorber upper bolt.
   4.3 Remove bolt linking stabilizer link and stabilizer lever.

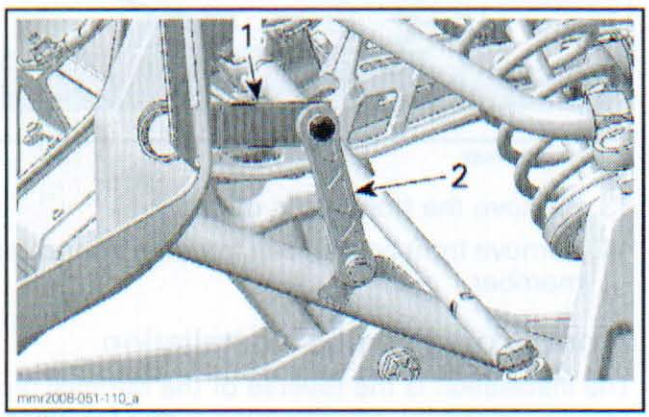

1. Stabilizer lever
2. Stabilizer link

   4.4 Remove upper and lower suspension arms bolts. Refer to *FRONT SUSPENSION* subsection.
   4.5 Pull suspension arms to remove the RH front suspension assembly.

   NOTE: Repeat same procedure for the LH front suspension.

5. Remove the stabilizer bar. Refer to *FRONT SUSPENSION* subsection.
6. Remove bolts securing the bottom of steering column.

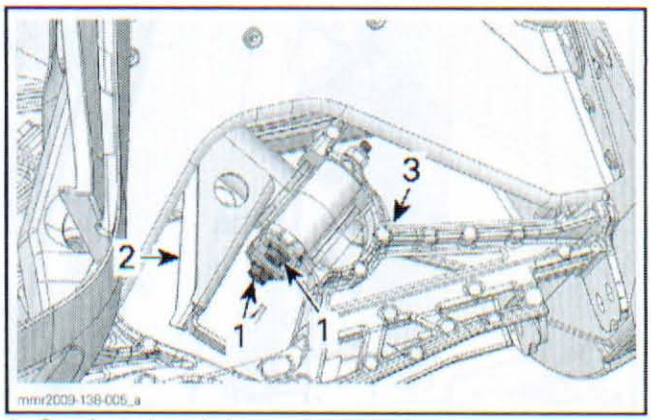

1. Steering column bolts
2. Steering column
3. Lower suspension arm support

7. Drill the following rivets.

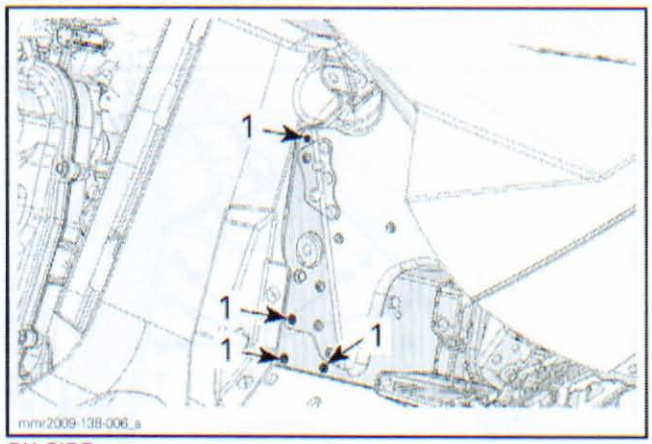

RH SIDE
1. Remove these rivets

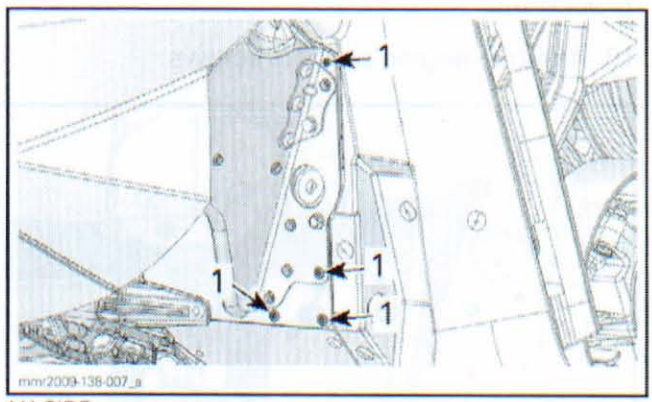

LH SIDE
1. Remove these rivets

8. Remove screws securing front cross member to frame (2 each side).

www.midwestmanuals.com

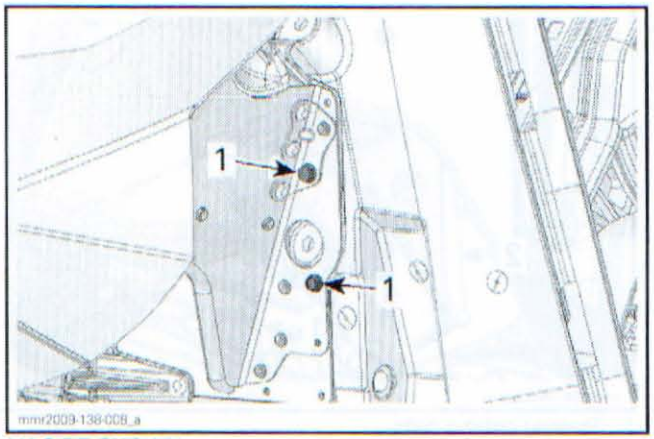

LH SIDE SHOWN
1. *Hexagonal flanged bolt*

9. Remove HUCK rivets (six each side), see removal procedure at the beginning of this subsection.

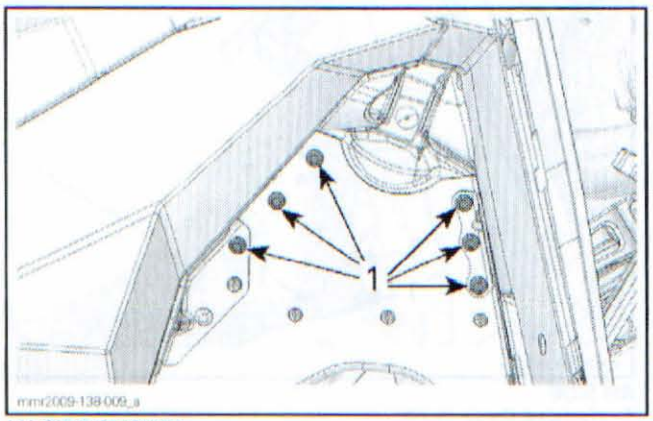

LH SIDE SHOWN
1. *HUCK rivets*

10. Remove engine support screws.

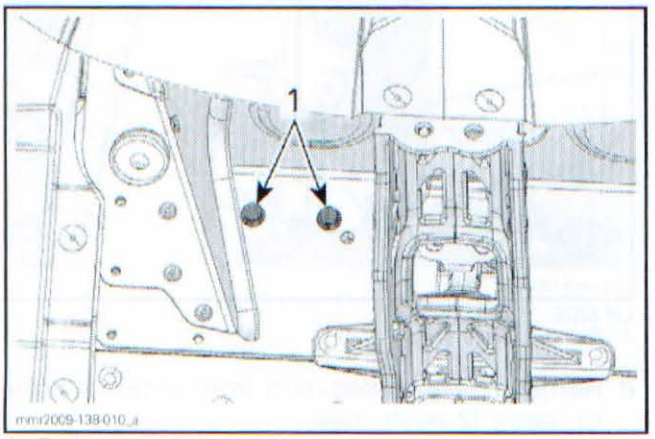

1. *Engine support screws*

11. Grind rivets securing the lower suspension arm support to engine member.

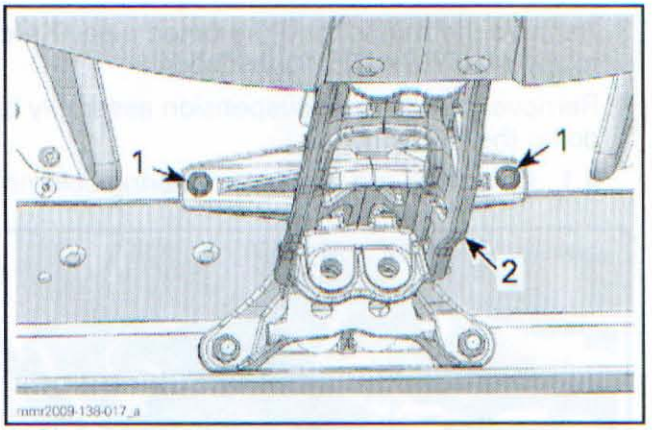

1. *Rivets*
2. *Lower suspension arm support*

12. Remove the following nuts.

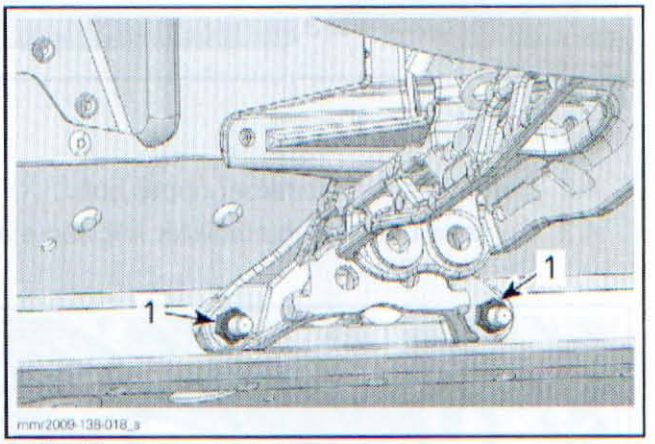

1. *Retaining nuts*

13. Remove the front cross member.
14. Remove front bottom pan from the front cross member.

Front Cross Member Installation

The installation is the reverse of the removal procedure. However, pay attention to the following.

1. Replace the HUCK rivets with the following parts.

NEW FASTENERS	
Hexagonal flanged bolt M6 x 20	(P/N 207 662 044)
Hexagonal flanged elastic stop nut M6	(P/N 233 261 414)

NOTE: Unless stated otherwise, install bolt heads toward outside of the vehicle.

2. Torque new fasteners to 10 N•m (89 lbf•**in**).
3. Reinstall all removed parts by using the appropriate installation procedure.

www.midwestmanuals.com

ENGINE MEMBER

Engine Member Removal

1. Remove engine from vehicle. Refer to *ENGINE REMOVAL AND INSTALLATION* subsection.
2. Remove rear suspension. Refer to *REAR SUSPENSION* subsection.
3. Remove the *FRONT CROSS MEMBER*, see procedure in this subsection.
4. Remove both side bottom pans by drilling the following rivets.

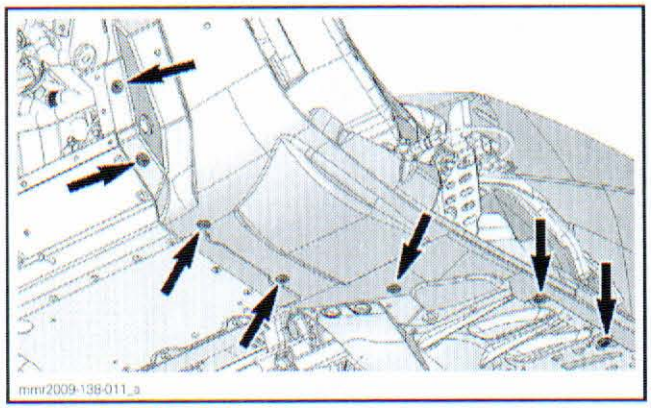

LH SIDE BOTTOM PAN

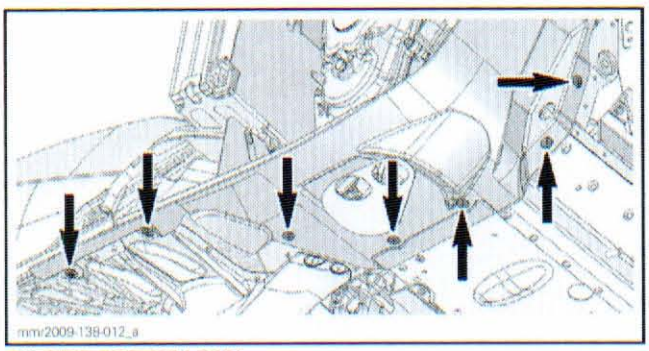

RH SIDE BOTTOM PAN

5. From underneath of tunnel, remove HUCK rivets, see removal procedure at the beginning of this subsection.

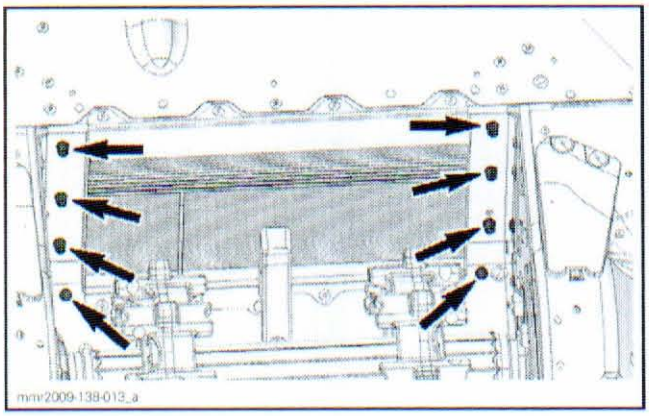

6. Drill or grind rivets securing engine member to frame.

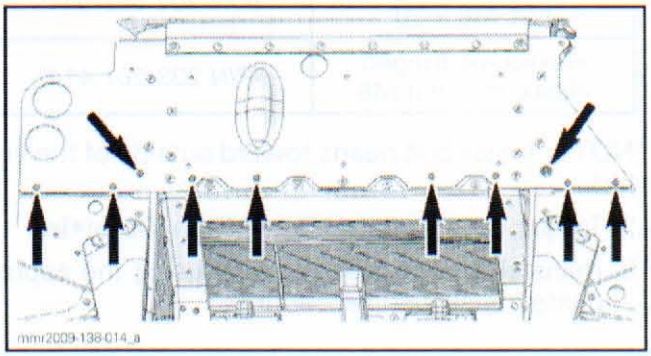

7. Remove HUCK rivets located on both sides of frame, see removal procedure at the beginning of this subsection.

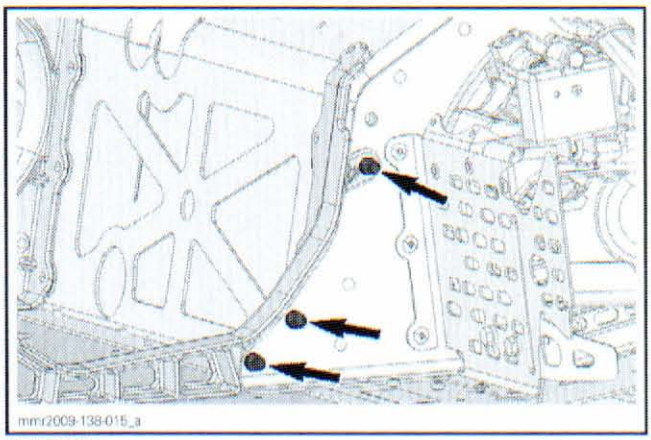

LH SIDE

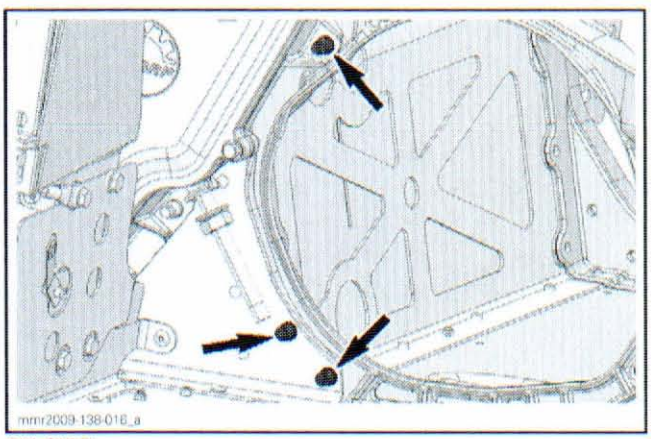

RH SIDE

8. Remove the engine member.

Engine Member Installation

The installation is the reverse of the removal procedure. However, pay attention to the following.

1. Replace the HUCK rivets with the following parts.

www.midwestmanuals.com

NEW FASTENERS	
Hexagonal flanged bolt M6 x 20	(P/N 207 662 044)
Hexagonal flanged elastic stop nut M6	(P/N 233 261 414)

NOTE: Install bolt heads toward outside of the vehicle.

2. Torque new fasteners to 10 N•m (89 lbf•**in**).
3. Reinstall all removed parts by using the appropriate installation procedure.

www.midwestmanuals.com

1200 4-TEC

ENGINE			ALL MODELS
Engine type			ROTAX® 1203
			4-stroke, Double Over Head Camshaft (DOHC), liquid cooled
Number of cylinders			3
Number of valves			12 valves (mechanical adjustment)
Bore			91 mm (3.58 in)
Stroke			60 mm (2.36 in)
Displacement			1 171 cm^3 (71.46 in^3)
Compression ratio			11.0:1
Decompressor type			N.A.
Maximum HP RPM			7800 RPM
Intake valve opening			0° BTDC
Intake valve closing			40° ABDC
Exhaust valve opening			60° BBDC
Exhaust valve closing			5° BTDC
Valve clearance	Intake		0.10 mm to 0.20 mm (.0039 in to .0079 in)
	Exhaust		0.30 mm to 0.40 mm (.0118 in to .0157 in)
Valve stem diameter	Intake	New	5.471 mm to 5.486 mm (.2154 in to .216 in)
		Service limit	5.450 mm (.2146 in)
	Exhaust	New	5.461 mm to 5.476 mm (.215 in to .2156 in)
		Service limit	5.440 mm (.2142 in)
Valve guide diameter		New	5.506 mm to 5.518 mm (.2168 in to .2172 in)
		Service limit	5.568 mm (.2192 in)
Valve spring free length		New	36.70 mm (1.445 in)
		Service limit	35.50 mm (1.398 in)
Valve seat contact width	Intake	New	1.6 mm to 1.8 mm (.063 in to .0709 in)
		Service limit	2.2 mm (.0866 in)
	Exhaust	New	1.4 mm to 1.8 mm (.0551 in to .0709 in)
		Service limit	2.4 mm (.0945 in)
Cam follower bore diameter		New	8.013 mm to 8.049 mm (.3155 in to .3169 in)
		Service limit	8.060 mm (.3173 in)
Cam follower shaft diameter		New	7.972 mm to 7.980 mm (.3139 in to .3142 in)
		Service limit	7.960 mm (.3134 in)
Piston measurement		New	90.950 mm to 90.966 mm (3.5807 in to 3.5813 in)
Piston/cylinder wall clearance		New	0.027 mm to 0.057 mm (.0011 in to .0022 in)
		Service limit	0.100 mm (.0039 in)

www.midwestmanuals.com

ENGINE (cont'd)			ALL MODELS
Piston ring type		1st	Upper compression ring, rectangular
		2nd	Lower compression ring, tapered face
		3rd	Oil scraper ring
Ring end gap	Rectangular	New	0.25 mm to 0.40 mm (.0098 in to .0157 in)
		Service limit	0.60 mm (.0236 in)
	Taper-face	New	0.20 mm to 0.40 mm (.0079 in to .0157 in)
		Service limit	0.70 mm (.0276 in)
	Oil scraper ring	New	0.20 mm to 0.70 mm (.0079 in to .0276 in)
		Service limit	1.0 mm (.0394 in)
Ring/piston groove clearance	Rectangular	New	0.30 mm to 0.70 mm (.0118 in to .0276 in)
		Service limit	0.150 mm (.0059 in)
	Taper-face	New	0.020 mm to 0.060 mm (.0008 in to .0024 in)
		Service limit	0.150 mm (.0059 in)
	Oil scraper ring	New	0.010 mm to 0.180 mm (.0004 in to .0071 in)
		Service limit	0.250 mm (.0098 in)
Cylinder bore		New	90.993 mm to 91.007 mm (3.5824 in to 3.583 in)
Cylinder taper		Maximum New	0.030 mm (.0012 in)
		Service limit	0.090 mm (.0035 in)
Cylinder out of round		Maximum New	0.008 mm (.0003 in)
		Service limit	0.050 mm (.002 in)
Camshaft bearing journal diameter	PTO/MAG	New	23.967 mm to 23.980 mm (.9436 in to .9441 in)
		Service limit	23.950 mm (.9429 in)
	Center	New	32.959 mm to 32.975 mm (1.2976 in to 1.2982 in)
		Service limit	32.942 mm (1.2969 in)
Camshaft bracket bore diameter	PTO/MAG	New	24.007 mm to 24.020 mm (.9452 in to .9457 in)
		Service limit	24.070 mm (.948 in)
Camshaft lobe height	Intake	New	38.12 mm to 38.32 mm (1.5008 in to 1.5087 in)
		Service limit	38.09 mm (1.4996 in)
	Exhaust	New	37.86 mm to 38.06 mm (1.4906 in to 1.4984 in)
		Service limit	37.83 mm (1.4894 in)
Crankshaft bearing journal diameter		New	35.984 mm to 36.000 mm (1.4167 in to 1.4173 in)
		Service limit	35.970 mm (1.4161 in)
Crankshaft radial play		Service limit	0.10 mm (.0039 in)
Crankshaft axial play		New	0.080 mm to 0.313 mm (.0031 in to .0123 in)
		Service limit	0.350 mm (.0138 in)
Balancer shaft bearing journal diameter		New	35.984 mm to 36.000 mm (1.4167 in to 1.4173 in)
		Service limit	35.970 mm (1.4161 in)
Balancer shaft radial play		Service limit	0.10 mm (.0039 in)
Balancer shaft axial play		New	0.10 mm to 0.23 mm (.0039 in to .0091 in)
		Service limit	0.350 mm (.0138 in)
Crankshaft pin diameter		New	37.984 mm to 38.000 mm (1.4954 in to 1.4961 in)
		Service limit	37.970 mm (1.4949 in)

www.midwestmanuals.com

ENGINE (cont'd)			ALL MODELS
Crankshaft deflection	MAG	Maximum	0.050 mm (.002 in)
	Center	Maximum	0.050 mm (.002 in)
	PTO	Maximum	0.030 mm (.0012 in)
Crankshaft/balancer shaft plain bearing inside diameter		Service limit	36.100 mm (1.4213 in)
Connecting rod big end diameter		Service limit	38.060 mm (1.4984 in)
Connecting rod big end radial play		Service limit	0.08 mm (.0031 in)
Connecting rod big end axial play		New	0.100 mm to 0.352 mm (.0039 in to .0139 in)
		Service limit	0.400 mm (.0157 in)
Connecting rod small end diameter		New	22.010 mm to 22.020 mm (.8665 in to .8669 in)
		Service limit	22.040 mm (.8677 in)
Piston pin diameter		New	21.991 mm to 21.996 mm (.8658 in to .866 in)
		Service limit	21.985 mm (.8656 in)
Connecting rod small end radial play		Service limit	0.045 mm (.0018 in)
COOLING SYSTEM			**ALL MODELS**
Coolant		Type	Ethyl glycol and distilled water (50%/50%). Use BRP premixed coolant (P/N 219 700 362) or coolant specifically formulated for aluminum engines
		Quantity	MX Z TNT/MX Z X/GTX: 4.0 L (1.1 U.S. gal.) MX Z RENEGADE/RENEGADE X/GTX: 5.8 L (1.5 U.S. gal.)
Thermostat opening temperature			75°C (167°F)
Radiator cap opening pressure			110 kPa (16 PSI)
LUBRICATION SYSTEM			**ALL MODELS**
Lubrication	Type		Dry sump. Replaceable oil filter
	Oil filter		BRP Rotax paper type, replaceable
	Engine oil pressure	Minimum	100 kPa (15 PSI) @ 1100 RPM
			400 kPa (58 PSI) @ 7700 RPM
	Engine oil	Capacity (oil change with filter)	3.5 L (3.7 qt (U.S. liq.))
		Recommended	XP-S 0W40 synthetic oil or an equivalent
FUEL SYSTEM			**ALL MODELS**
Throttle body type			Dell'Orto
Idle speed		Normal idle	1100 RPM
		Fast idle	1500 RPM
Gas type			Unleaded
Minimum octane rating		Inside North America ((R+M)/2)	87
		Outside North America (RON)	92
Fuel tank capacity			40 L (10.57 U.S. gal.)

www.midwestmanuals.com

ELECTRICAL SYSTEM		ALL MODELS
Magneto generator output		490 W @ 5000 RPM @ 14 V
Ignition type		IDI (Inductive Digital Ignition)
Spark plug	Make and type	NGK CR8EKB
	Gap	0.75 mm (.03 in) (not adjustable)
Ignition timing		Not adjustable
Battery		12 volt 18 A.h. YTX20HL-BS
Headlamp		2 X 55/60 W
Taillight and stoplight		5/21 W
Fuses (fuse box)	F 1	15 A
	F 2	10 A
	F 3	5 A
	F 4	5 A
	F 5	5 A
	F 6	20 A
	F 7	15 A
	F 8	20 A
	F 9	5 A
	F 10	10 A
	F 11	15 A
Fuse	Main fuse	30 A

DRIVE SYSTEM		GSX	GTX
Chaincase oil	Type	XP-S synthetic chaincase oil	
	Quantity	250 ml (8.5 U.S. oz)	
Chain drive ratio		24/43	24/45
Chain	Pitch	9.53 mm (3/8 in)	
	Type/links qty/plate qty	Silent 104/13	
Drive pulley type		TRA IV	
Drive pulley calibration	Clutch engagement	2500	
	Spring color	Yellow-blue	
	Spring length	90.70 mm (3.571 in)	
	Pin	Solid (P/N 417 222 594)	
	Ramp	617	
	Screw position	3	
Driven pulley type	Type	QRS	
	Spring preload New	8.3 kgf ± 0.7 kgf (18.3 lbf ± 1.5 lbf)	
	Spring preload After break-in	7.5 kgf ± 0.7 kgf (16.5 lbf ± 1.5 lbf)	
	Spring color	Beige	
	Cam angle	50/44°	
Pulley distance Offset	Z	21.40 mm (.843 in)	
	X	36.90 mm ± 0.5 mm (1.453 in ± .02 in)	

www.midwestmanuals.com

DRIVE SYSTEM (cont'd)			GSX	GTX
Drive belt part number			417 300 383	
Drive belt		Width	38.3 mm (1.508 in)	
		Wear limit	35.90 mm (1.413 in)	
Track		Width	381 mm (15 in)	
		Length	3.05 m (120 in)	3.49 m (137 in)
		Profile height	25.4 mm (1 in)	
Track adjustment		Deflection	30 mm to 35 mm (1.18 in to 1.38 in)	
		Force	7.3 kgf (16 lbf)	
DRIVE SYSTEM			**MX Z RENEGADE**	**MX Z RENEGADE X**
Chaincase oil		Type	XP-S synthetic chaincase oil	
		Quantity	250 ml (8.5 U.S. oz)	
Chain drive ratio			24/45	
Chain		Pitch	9.53 mm (3/8 in)	
		Type/links qty/plate qty	Silent 104/13	
Drive pulley type			TRA IV	
Drive pulley calibration		Clutch engagement	2800	
		Spring color	Blue-blue	
		Spring length	99.80 mm (3.929 in)	
		Pin	Solid (P/N 417 222 594)	
		Ramp	617	
		Screw position	3	
Driven pulley type	Type		QRS	
	Spring preload	New	8.3 kgf ± 0.7 kgf (18.3 lbf ± 1.5 lbf)	
		After break-in	7.5 kgf ± 0.7 kgf (16.5 lbf ± 1.5 lbf)	
	Spring color		Beige	
	Cam angle		47/44°	
Pulley distance Offset		Z	21.40 mm (.843 in)	
		X	36.90 mm ± 0.5 mm (1.453 in ± .02 in)	
Drive belt part number			417 300 383	
Drive belt		Width	38.3 mm (1.508 in)	
		Wear limit	35.90 mm (1.413 in)	
Track		Width	406 mm (16 in)	
		Length	3.49 m (137 in)	
		Profile height	31.75 mm (1.25 in)	
Track adjustment		Deflection	30 mm to 35 mm (1.18 in to 1.38 in)	
		Force	7.3 kgf (16 lbf)	

www.midwestmanuals.com

DRIVE SYSTEM			MX Z TNT	MX Z X
Chaincase oil		Type	XP-S synthetic chaincase oil	
		Quantity	250 ml (8.5 U.S. oz)	
Chain drive ratio			24/43	
Chain		Pitch	9.53 mm (3/8 in)	
		Type/links qty/plate qty	Silent 104/13	
Drive pulley type			TRA IV	
Drive pulley calibration		Clutch engagement	2800	
		Spring color	Blue-blue	
		Spring length	99.80 mm (3.929 in)	
		Pin	Solid (P/N 417 222 594)	
		Ramp	617	
		Screw position	3	
Driven pulley type	Type		QRS	
	Spring preload	New	8.3 kgf ± 0.7 kgf (18.3 lbf ± 1.5 lbf)	
		After break-in	7.5 kgf ± 0.7 kgf (16.5 lbf ± 1.5 lbf)	
	Spring color		Beige	
	Cam angle		50/44°	
Pulley distance Offset		Z	21.40 mm (.843 in)	
		X	36.90 mm ± 0.5 mm (1.453 in ± .02 in)	
Drive belt part number			417 300 383	
Drive belt		Width	38.3 mm (1.508 in)	
		Wear limit	35.90 mm (1.413 in)	
Track		Width	381 mm (15 in)	
		Length	3.05 m (120 in)	
		Profile height	25.4 mm (1 in)	31.75 mm (1.25 in)
Track adjustment		Deflection	30 mm to 35 mm (1.18 in to 1.38 in)	
		Force	7.3 kgf (16 lbf)	
BRAKE SYSTEM			**ALL MODELS**	
Brake lining minimum thickness			1 mm (.039 in)	
Brake disk minimum thickness			4.5 mm (.177 in)	
Brake fluid		Type	DOT 4	
		Quantity	65 ml (2.2 U.S. oz)	
FRONT SUSPENSION			**GSX**	**GTX**
Suspension type			REV-XP	
Suspension maximum travel			229 mm (9 in)	
Shock absorber type			H.P.G.	
Stabilizer bar type			Link	

www.midwestmanuals.com

FRONT SUSPENSION		MX Z RENEGADE	MX Z RENEGADE X
Suspension type		REV-XP	
Suspension maximum travel		229 mm (9 in)	
Shock absorber type		H.P.G	H.P.G. rebound clicker (aluminum)
Stabilizer bar type		Link	
FRONT SUSPENSION		**MX Z TNT**	**MX Z X**
Suspension type		REV-XP	
Suspension maximum travel		229 mm (9 in)	
Shock absorber type		H.P.G. T/A (aluminum)	H.P.G. rebound clicker (aluminum)
Stabilizer bar type		Link	
REAR SUSPENSION		**GSX**	**GTX**
Suspension type		SC-5	
Suspension maximum travel		381 mm (15 in)	330 mm (13 in)
Shock absorber type	Center	H.P.G.	H.P.G.
	Rear	H.P.G. VR	LE: H.P.G. VR SE: Motion control air spring
Stroke limiter standard position		3	
Coupling blocks standard position		2	
REAR SUSPENSION		**MX Z RENEGADE**	**MX Z RENEGADE X**
Suspension type		SC-5	
Suspension maximum travel		330 mm (13 in)	
Shock absorber type	Center	H.P.G.	H.P.G. T/A (aluminum)
	Rear	H.P.G.	H.P.G. racing clicker (aluminum)
Stroke limiter standard position		3	
Coupling blocks standard position		2	
REAR SUSPENSION		**MX Z TNT**	**MX Z X**
Suspension type		SC-5	
Suspension maximum travel		381 mm (15 in)	
Shock absorber type	Center	H.P.G. T/A (aluminum)	
	Rear	HPG T/A (aluminum)	H.P.G. racing clicker (aluminum)
Stroke limiter standard position		3	
Coupling blocks standard position		2	
STEERING SYSTEM		**ALL MODELS**	
Ski type		GTX: Pilot SL All others: Pilot 5.7	
Toe-out		5 mm (.197 in)	
Camber		0°	

www.midwestmanuals.com

WEIGHT AND DIMENSIONS	GSX	GTX
Dry weight	234 kg (516 lb)	LE: 265 kg (584 lb) SE: 271 kg (597 lb)
Length	289 cm (113.8 in)	323 cm (127.2 in)
Width	122 cm (48 in)	
Height	127 cm (50 in)	136 cm (54 in)
Ski stance (carbide to carbide)	119.5 cm (47 in)	
WEIGHT AND DIMENSIONS	**MX Z RENEGADE**	**MX Z RENEGADE X**
Dry weight	242 kg (534 lb)	236 kg (520 lb)
Length	311 cm (122.4 in)	
Width	122 cm (48 in)	
Height	133 cm (52 in)	118 cm (46 in)
Ski stance (carbide to carbide)	119.5 cm (47 in)	
WEIGHT AND DIMENSIONS	**MX Z TNT**	**MX Z X**
Dry weight	231 kg (509 lb)	
Length	289 cm (113.8 in)	
Width	122 cm (48 in)	
Height	119 cm (47 in)	
Ski stance (carbide to carbide)	119.5 cm (47 in)	

www.midwestmanuals.com

WIRING DIAGRAM INFORMATION

SERVICE TOOLS

Description	Part Number	Page
CRIMPING PLIER FOR HEAVY GAGE WIRE	529 035 730	490
CRIMPING TOOL	529 035 909	488
KOSTAL DIE	529 035 906	488

SERVICE TOOLS – OTHER SUPPLIER

Description	Part Number	Page
SNAP-ON SCREWDRIVER	TT600-5	484
TOOL	AMP-755430-2	485–486

GENERAL

WIRING DIAGRAM LOCATION

The wiring diagrams are in the manual back cover pocket.

WIRING DIAGRAM CODES

The wiring diagrams use the following codes.

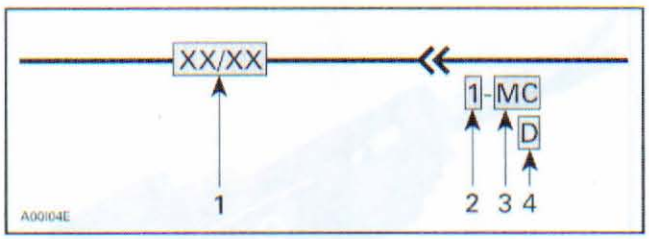

1. *Wire colors*
2. *Connector location*
3. *Connector code*
4. *Terminal position in connector*

Wire Colors

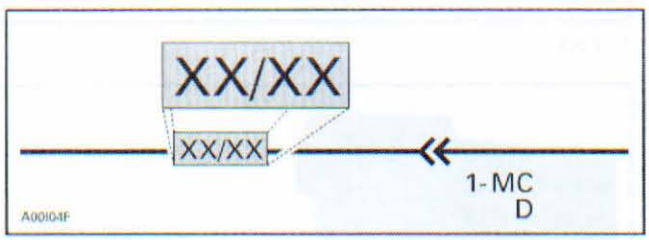

The first color of a wire is the main color, second color is the stripe.

Example: YL / BK is a YELLOW wire with a BLACK stripe.

COLOR CODE					
BE	—	BEIGE	OR	—	ORANGE
BK	—	BLACK	RD	—	RED
BU	—	BLUE	VI	—	VIOLET
BR	—	BROWN	WH	—	WHITE
GN	—	GREEN	YL	—	YELLOW
GY	—	GRAY			

Connector Location

The first digit of the connector identification number presents the location of the connector on the vehicle. It may also describe the part removal that is required to reach the connector.

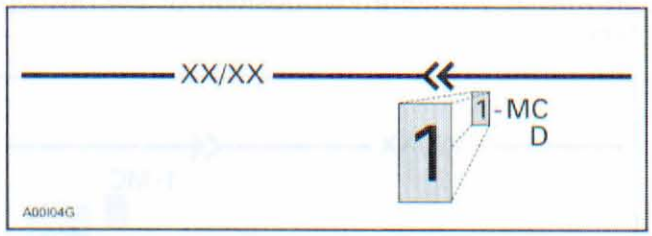

The location of the connectors are shown on the wiring diagram with a vehicle schematic as shown below.

www.midwestmanuals.com

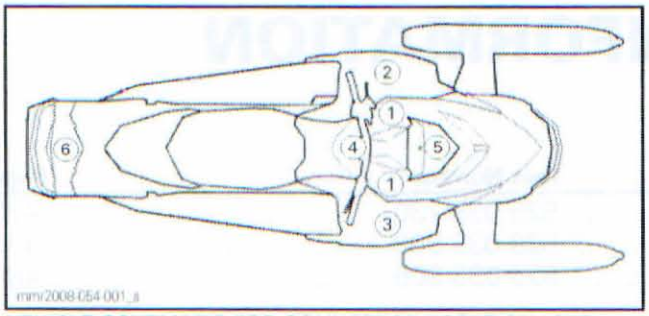

VEHICLE SCHEMATIC FOR CONNECTOR LOCATION (SEE WIRING DIAGRAM)

Connector Code

The next two letters (may be up to 8 letters) of the connector identification number represents a connector reference. If there are many connectors in the same area this helps identify which wire is in which connector.

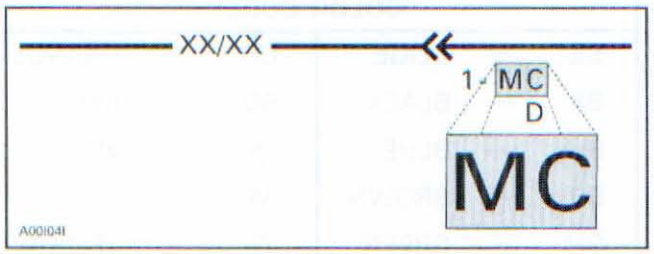

Terminal Position in Connector

The third portion of the connector identification number represents the location of the terminal in the connector. This could be identified by either a number or by a letter depending on the type of connector used.

NOTE: The terminal position identification may also be at the rightmost position of the description.

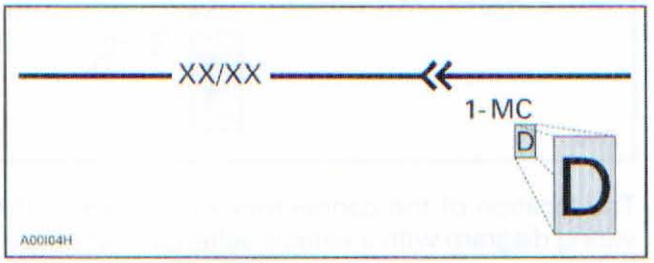

DEUTSCH CONNECTOR INFORMATION

Connector Disassembly

Male Housing

Insert SNAP-ON SCREWDRIVER (P/N TT600-5) under lock and twist to lift it.

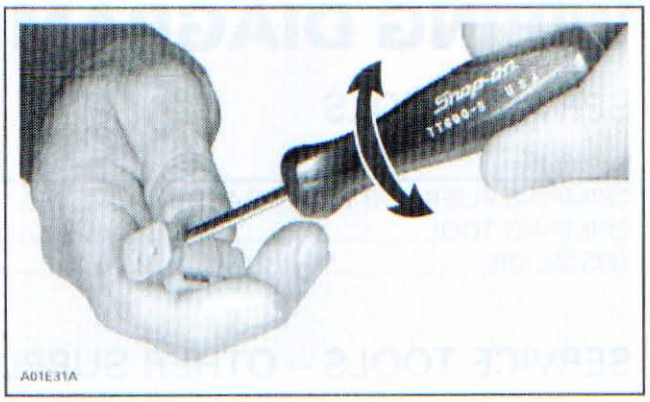

Pry tab to free connector then pull wire out of housing.

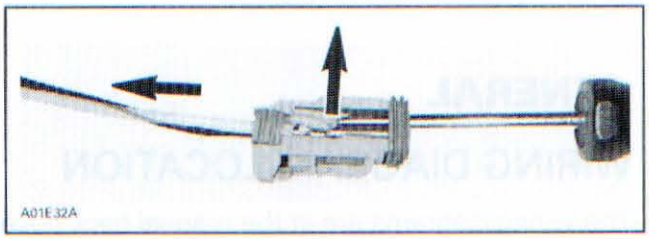

FEMALE CONNECTOR HOUSING — CUT-AWAY

Female Housing

Using a small hook, pull out the lock.

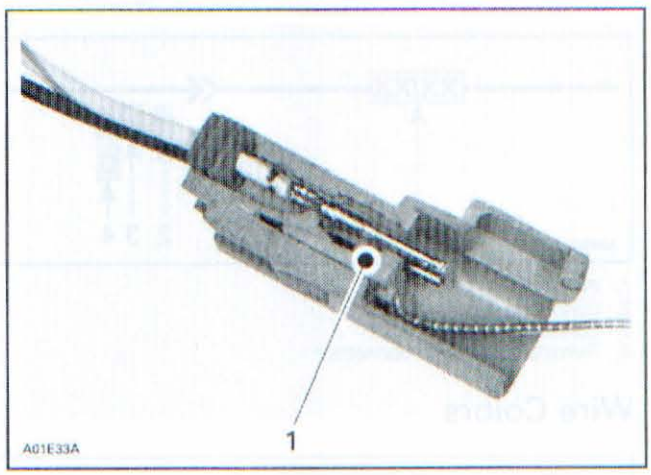

1. Lock

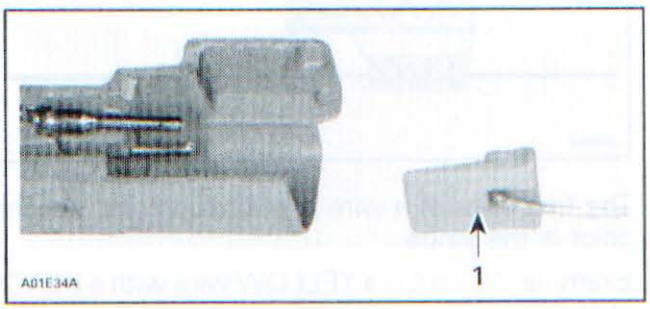

1. Lock

www.midwestmanuals.com

Pry tab to free connector then pull wire out of housing.

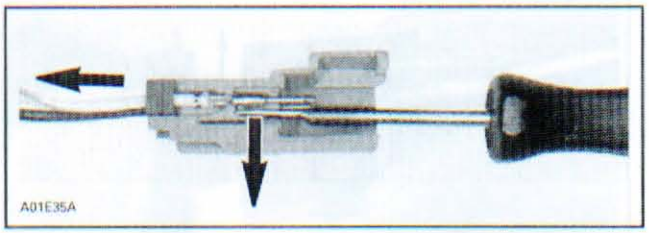

FEMALE HOUSING — CUT-AWAY

PACKARD CONNECTOR INFORMATION (GAUGE)

Connector Disassembly

Push on both tabs to remove retainer.

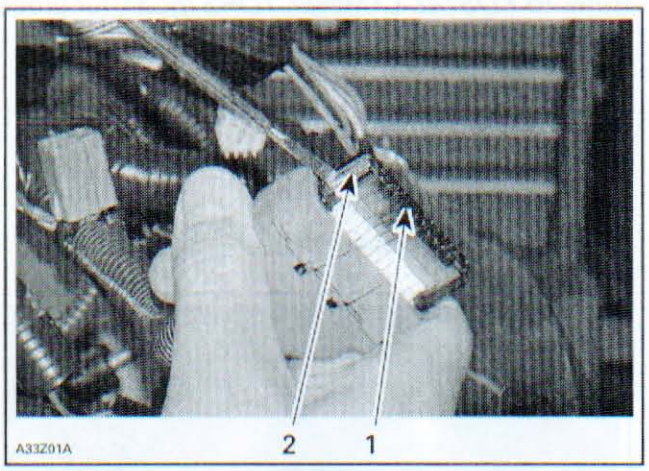

TYPICAL
1. *Retainer*
2. *Tab (one on each side)*

Open housing by lifting 4 tabs.

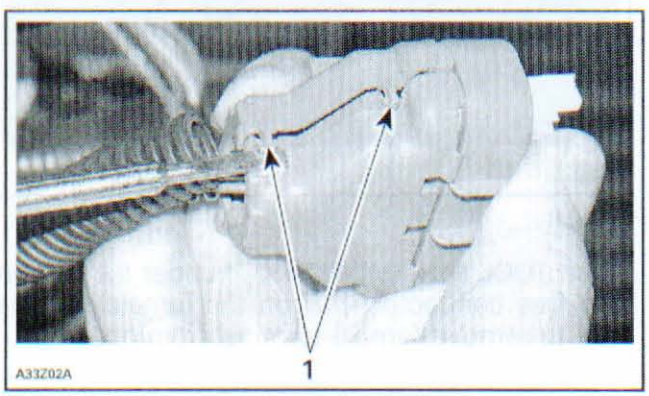

TYPICAL
1. *Tabs (2 on each side)*

Lift the top plastic lock of the female terminal to be removed and hold in position. Lift the female terminal to unlock from the housing and push out of housing.

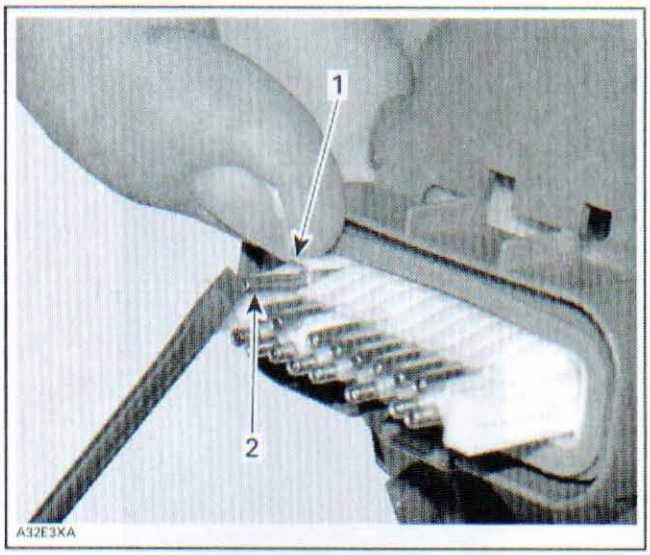

1. *Lift and hold plastic lock*
2. *Lift to unlock and push out*

AMP MULTILOCK CONNECTOR INFORMATION

Connector Disassembly

Male Housing

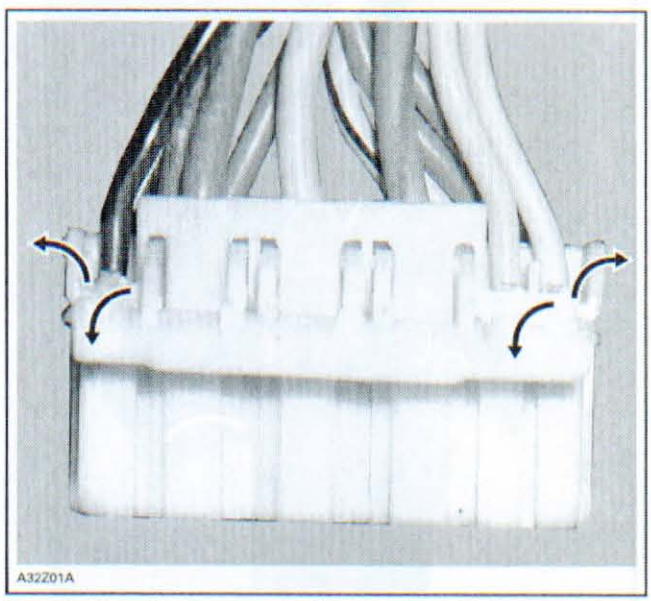

Insert TOOL (P/N AMP-755430-2) under lock and twist to lift it.

www.midwestmanuals.com

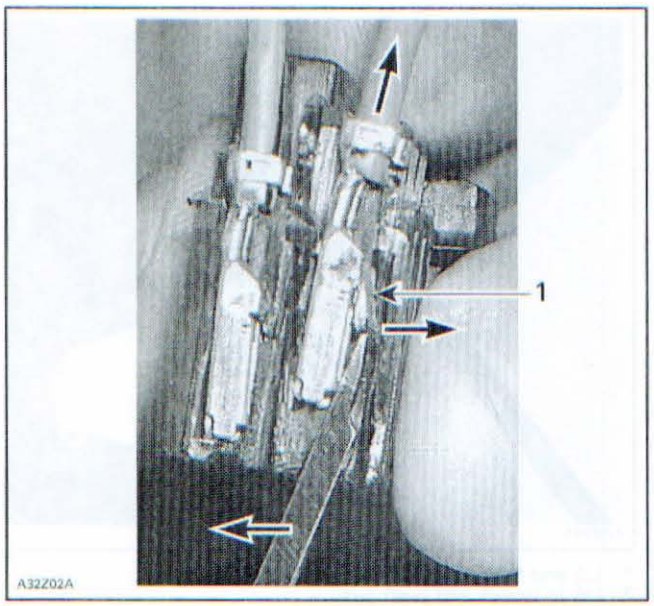

MALE HOUSING — CUT-AWAY
1. Lock

Female terminals can be removed from housing with sharp head pin.

Female Housing

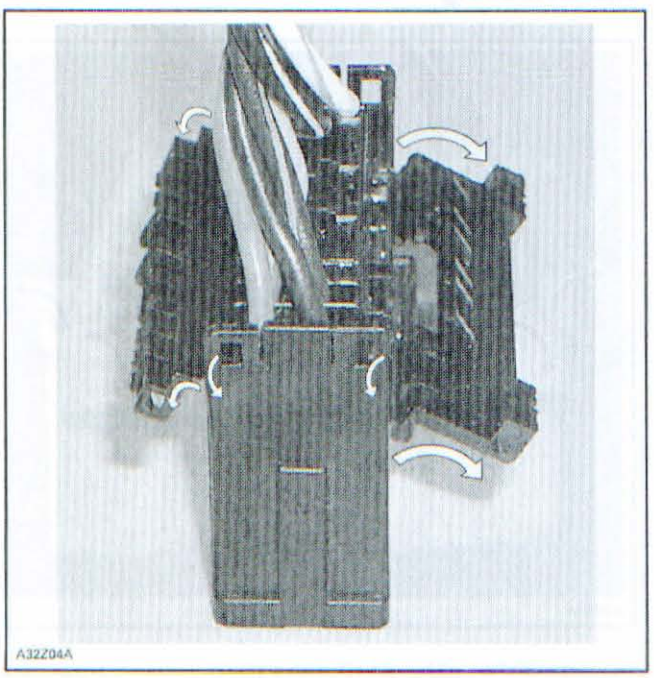

Insert TOOL (P/N AMP-755430-2) under lock and twist to lift it.

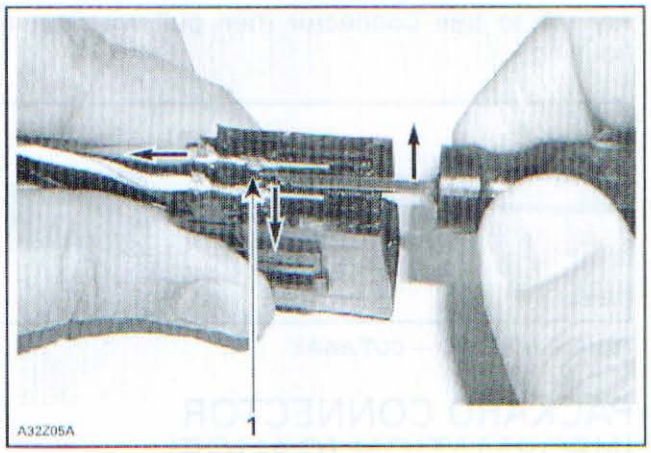

FEMALE HOUSING — CUT-AWAY
1. Lock

Terminal Crimping

Refer to *KOSTAL CONNECTORS (ECM)* for procedure.

AMP CONNECTOR (8-CIRCUIT) INFORMATION

Connector Disassembly

Pry housing to release lock.

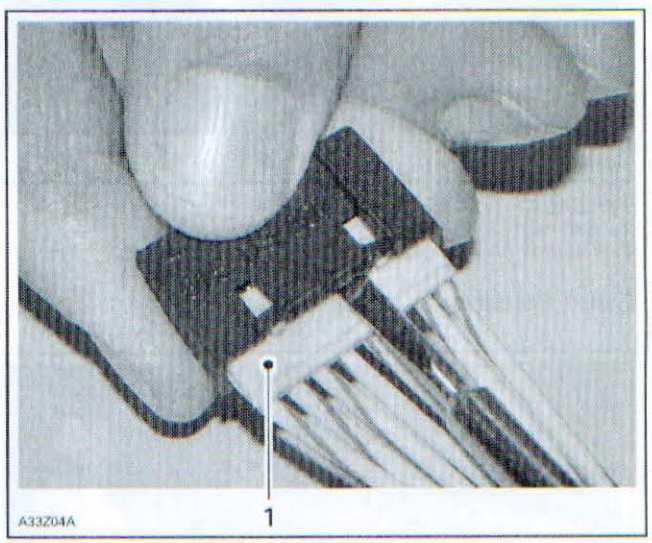

1. Lock

Insert TOOL (P/N AMP-755430-2) under tab and pry it to free connector. Pull on the female terminal wire to remove female terminal from housing.

www.midwestmanuals.com

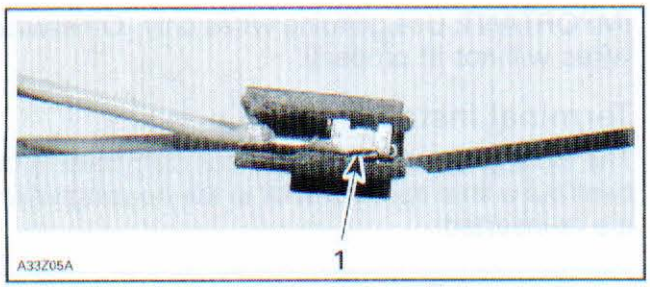

AMP 8-CIRCUIT CONNECTOR — CUT-AWAY
1. Tab

Terminal Crimping

Refer to *KOSTAL CONNECTORS (ECM)* for procedure.

KOSTAL CONNECTOR INFORMATION (ECM)

Terminal Removal

Unlock the connector housing cover by pushing in the tabs on top of the housing with a flat screwdriver to be able to flip the top cover up.

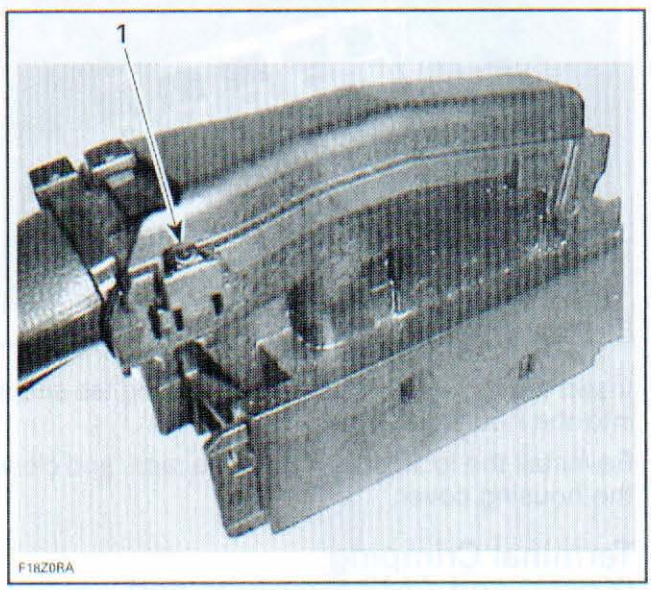

1. Push in tab

Lift the cover by pushing it forward.

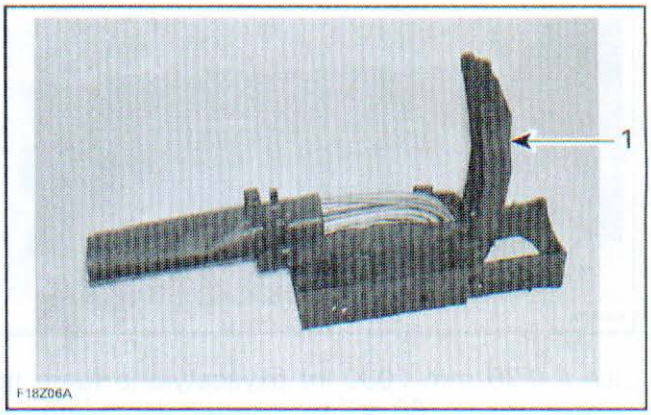

1. Cover

Cut both locking ties that secure the harness to the housing.

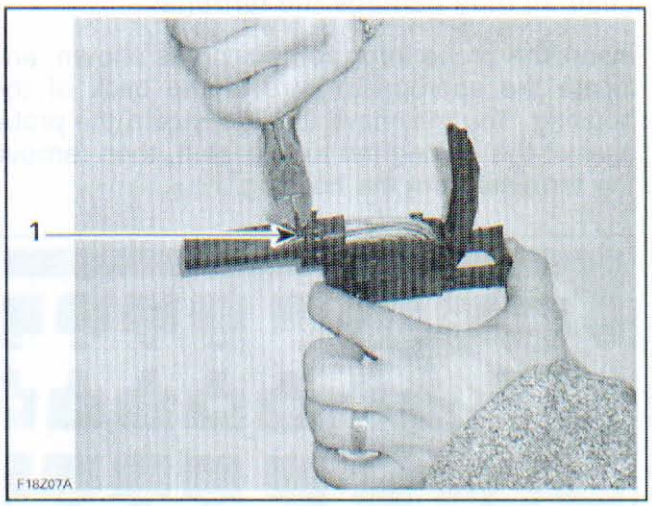

1. Locking ties

Turn the housing over and remove the lock by pushing and then pulling toward the wire harness.

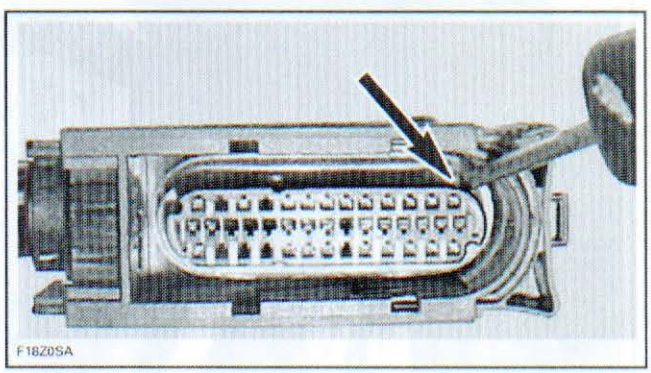

www.midwestmanuals.com

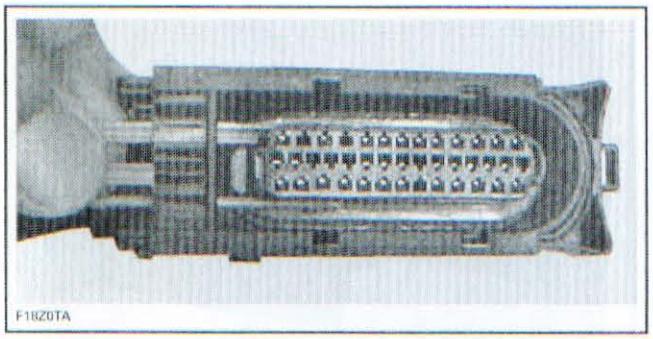
F18Z0TA

Use a 0.76 mm (.030 in) oxyacetylene torch tip cleaner or a no. 68 drill bit inserted down into the housing to release the locking tab on the connector.

NOTICE Using a probe larger than 0.76 mm (.030 in) may damage the terminal.

Insert the probe into the housing as shown, and locate the appropriate wire in the back of the housing. You may have to slightly cam the probe against the locking tab to release it, then remove the terminal from the housing.

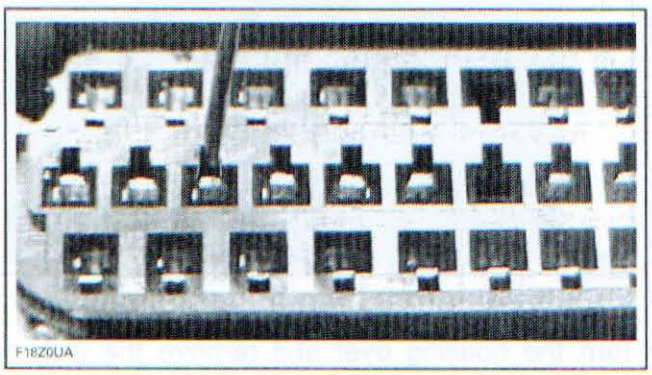
F18Z0UA

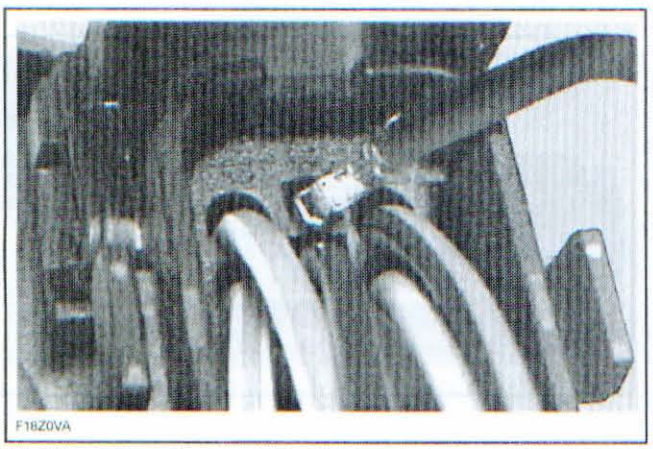
F18Z0VA

If the wire is in good condition but the terminal is rusted or corroded, remove defective terminal and crimp a new one. If wire and terminal are defective, acquire a new genuine wire and new terminal and crimp them together as explained below.

IMPORTANT: Use genuine wires only. Otherwise wires will not fit properly.

Terminal Installation

The locking tab on the connector may have to be bent out a little so it will lock in the housing when it's re-inserted.

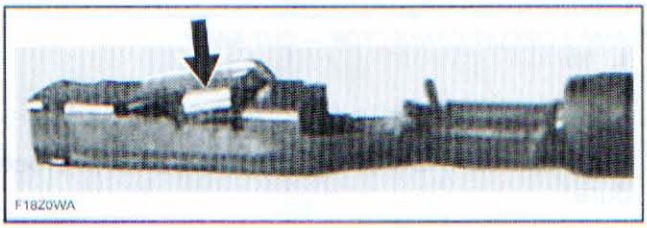
F18Z0WA

When re-inserting the connector, the locking tab must be installed facing the smaller cutout of the connector cavity.

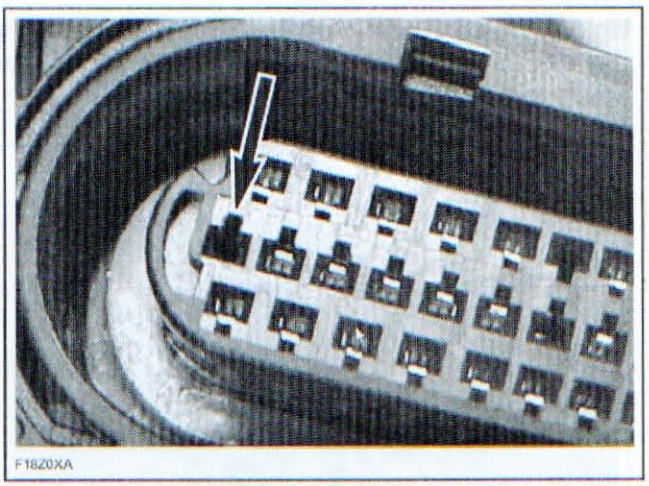
F18Z0XA

Insert the terminal, ensuring the locking tab snaps into the housing.

Re-install the lock, attach the 2 tie raps, and close the housing cover.

Terminal Crimping (Kostal and AMP 8-circuits and Multilock)

To crimp a new connector terminal, use the CRIMPING TOOL (P/N 529 035 909) and the KOSTAL DIE (P/N 529 035 906).

www.midwestmanuals.com

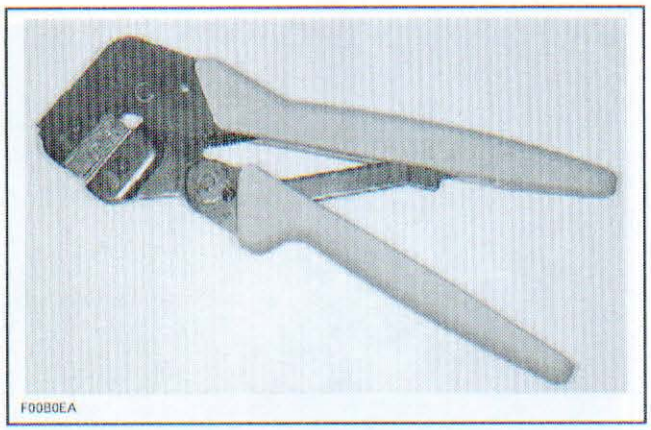

CRIMPING TOOL

To properly crimp the wires, strictly follow this procedure.

Strip the wire to a maximum of 3 mm (1/8 in).

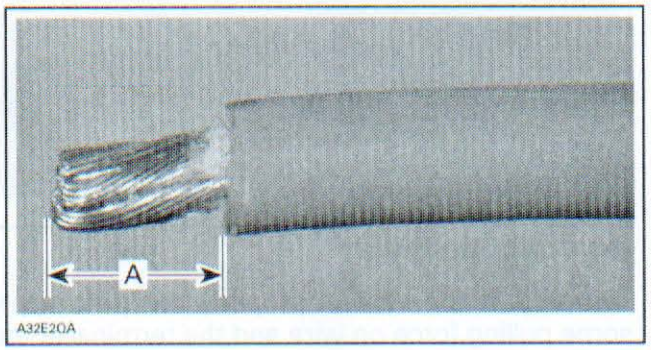

TYPICAL
A. 3 mm (1/8 in) max.

Position wire in terminal.

Squeeze the terminal tabs with your fingers to temporarily retain terminal in place.

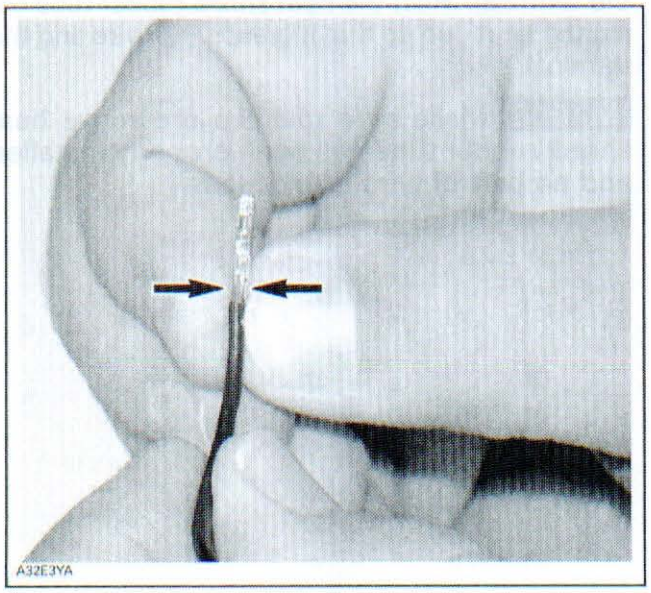

Insert terminal with wire in crimping pliers and position so that top of terminal tabs are flush with pliers edge or a little bit lower as shown.

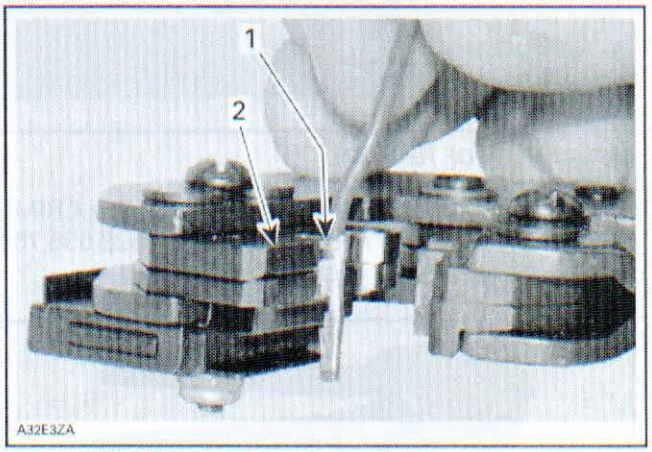

1. Top of terminal tabs
2. Align tabs with pliers edge

Crimp terminal. Ensure no tiny wire goes out of terminal. This might cause strange problems of the electrical system.

BATTERY CABLE TERMINAL INFORMATION

Terminal Installation

Carefully strip the wire approximately to 10 mm (1/2 in) in length, using a wire stripping tool or sharp blade/knife.

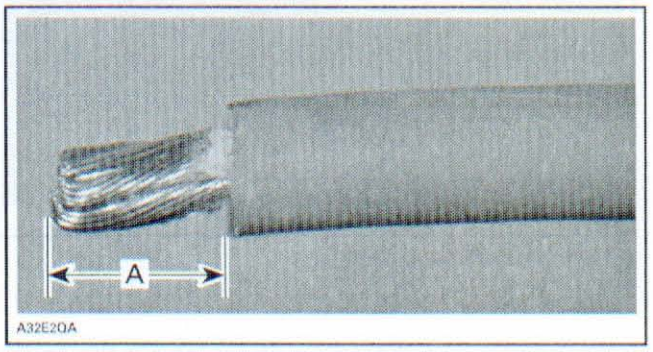

A. 10 mm (1/2 in)

NOTE: Make sure not to cut wire strands while stripping the wire.

Install the appropriate terminal on the wire according to the requirement. Refer to appropriate *PARTS CATALOG*.

www.midwestmanuals.com

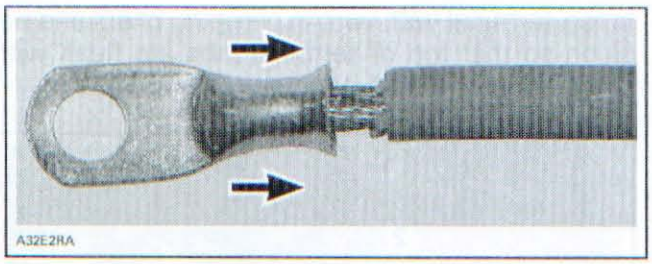

INSTALLATION OF TERMINAL

Follow the instructions provided with the CRIMPING PLIER FOR HEAVY GAGE WIRE (P/N 529 035 730) to select the proper position of the tool.

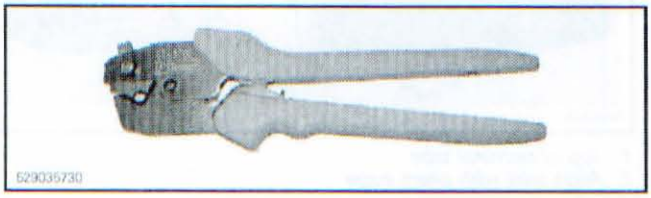

NOTE: Different wires require different crimp pliers settings, so make sure to follow the instruction supplied with the tool.

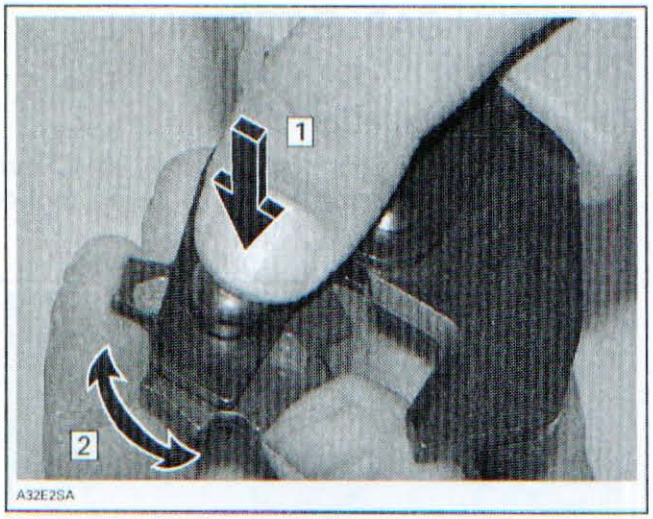

POSITIONING THE CRIMP PLIERS
Step 1: Press
Step 2: Rotate

After positioning the crimp pliers, crimp the terminal already installed on wire.

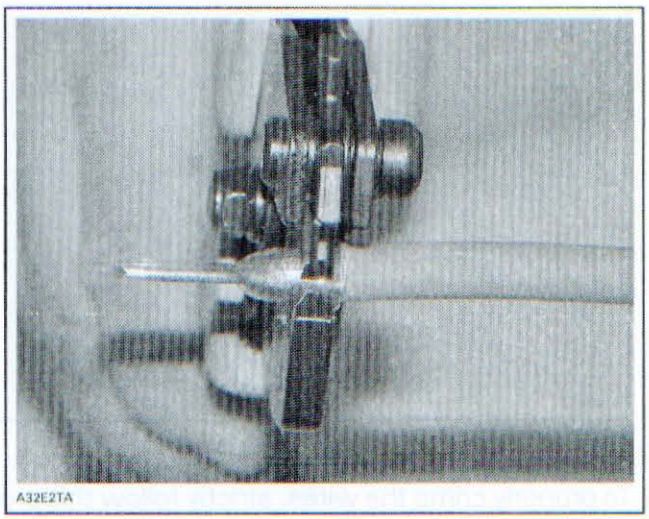

CRIMPING OF WIRE



PROPERLY CRIMPED WIRE

To verify, if the wire is properly crimped, apply some pulling force on wire and the terminal at the same time from both directions.

NOTICE **Never solder the wire to the terminal. Soldering can change the property of the wire and it can become brittle and break.**

Install the protective heat shrink rubber tube on the terminal. Heat the heat shrink rubber tube using the heat gun so that it grasps the wire and the terminal.

NOTICE **Make sure that the protective heat shrink rubber tube has been properly installed and no part of wire is exposed.**

www.midwestmanuals.com

2009 REV-XR 1200 MX Z

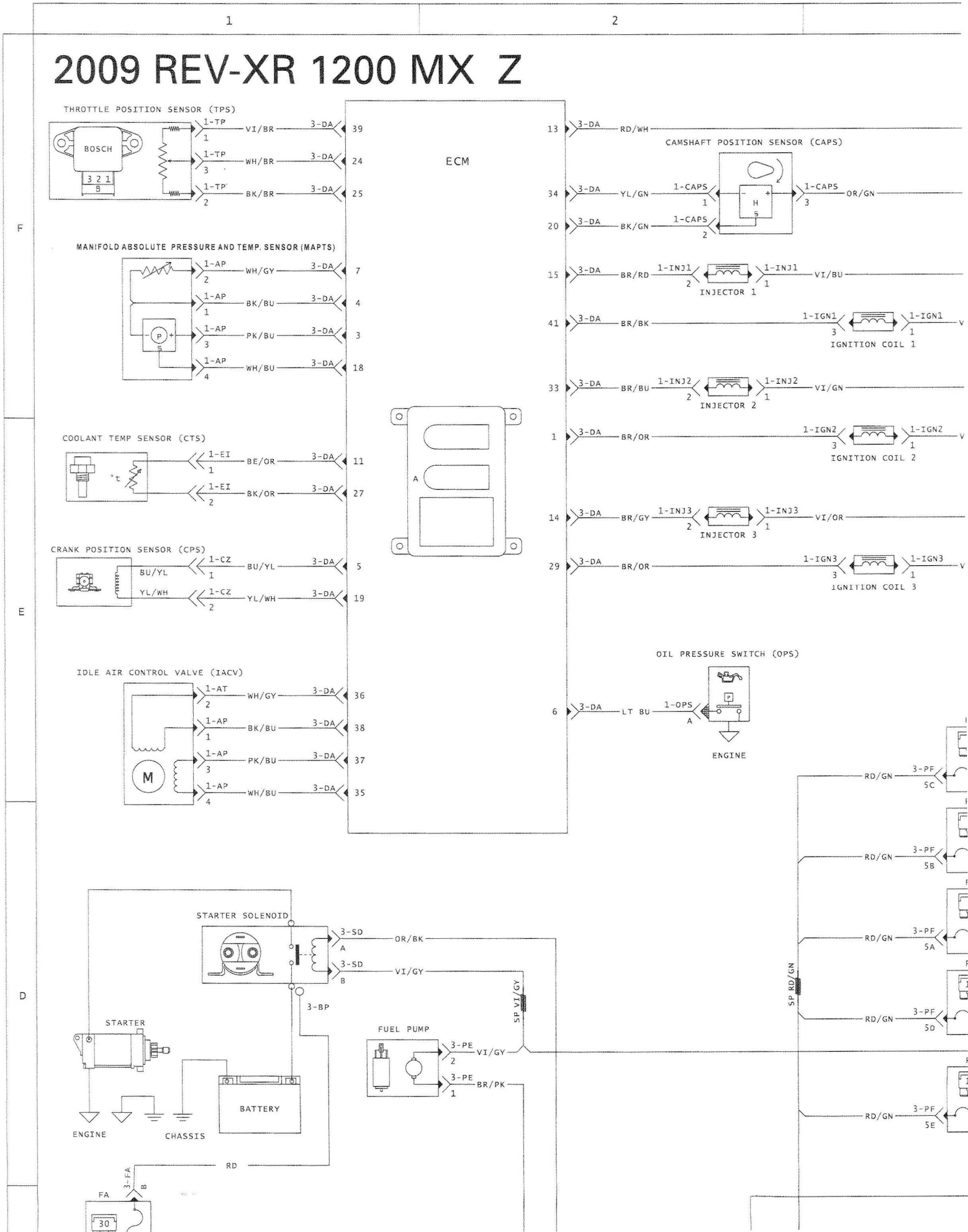

www.midwestmanuals.com

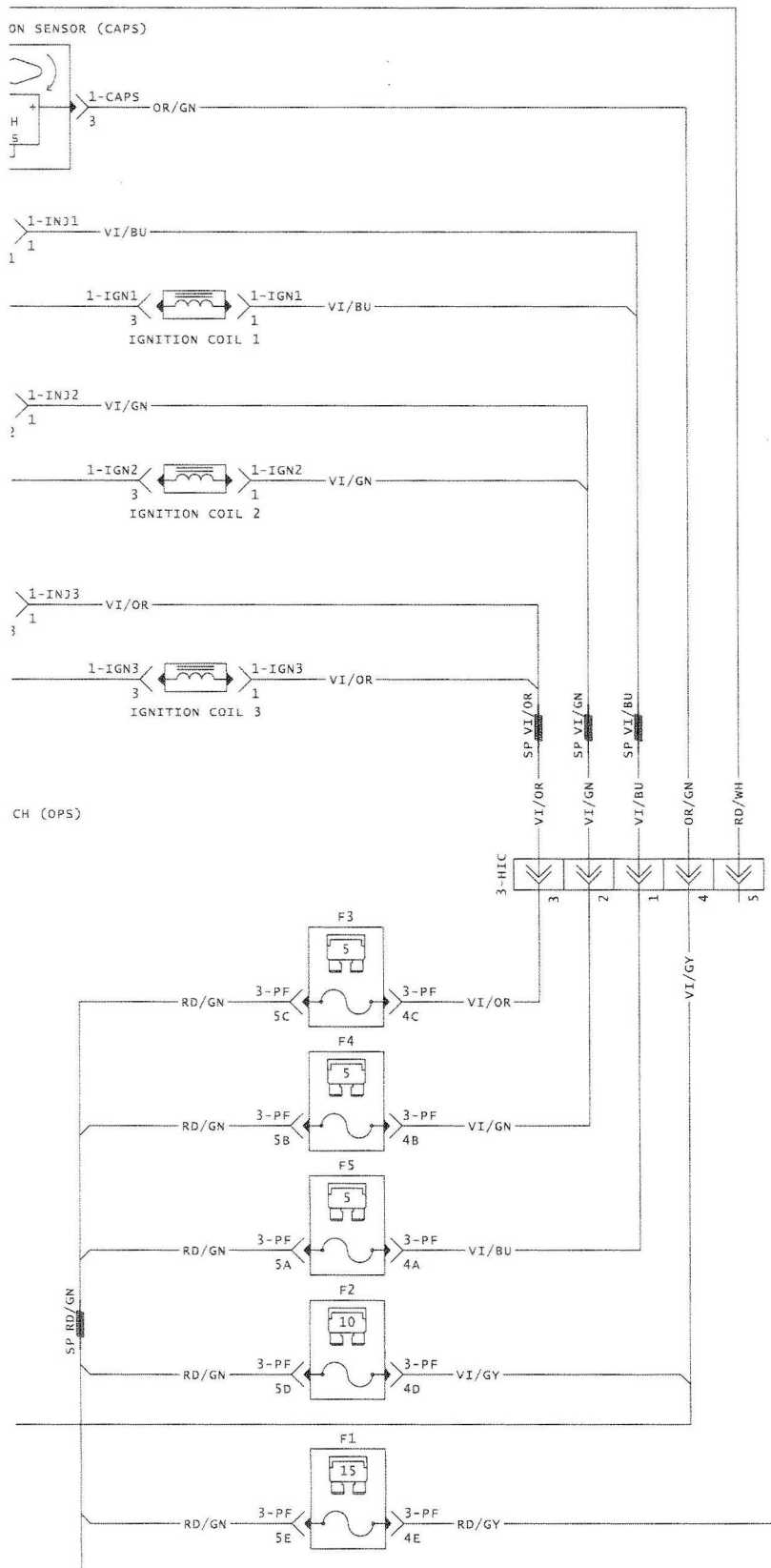

www.midwestmanuals.com

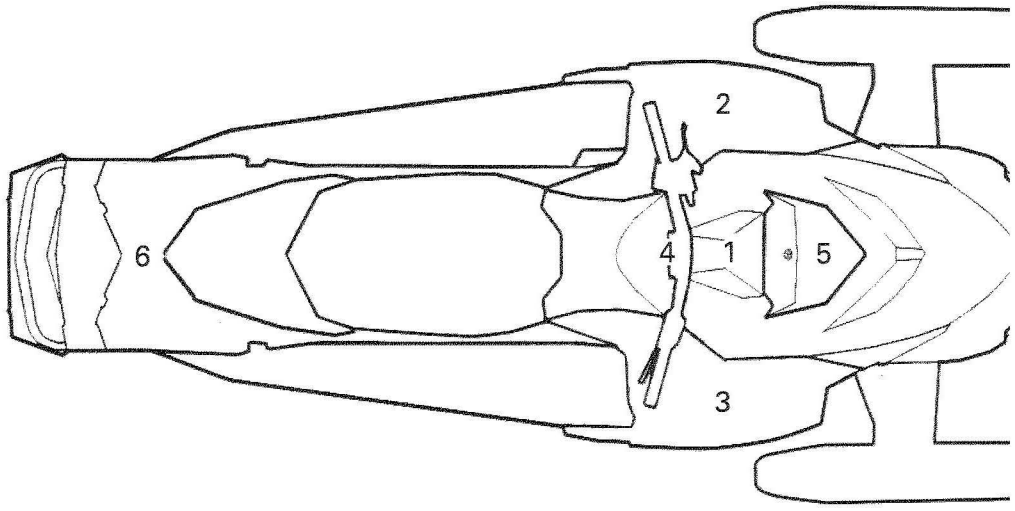

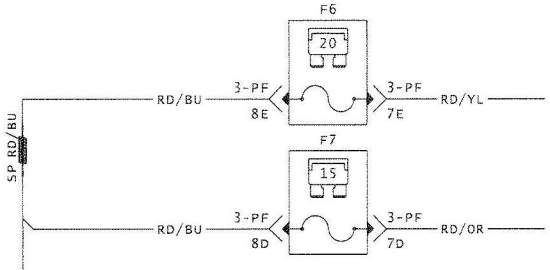

www.midwestmanuals.com

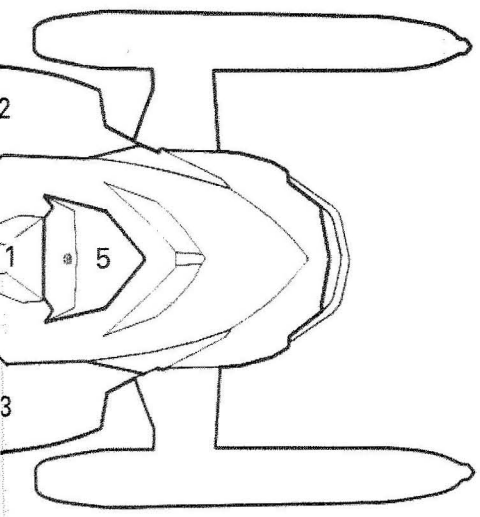

PREM

5-HG2

11
9 RI
3 RI
6 RI
4 BI
2
8
10 G
1 BI
5
7

F6
20
3-PF
7E
RD/YL
SP RD/YL

F7
15
3-PF
7D
RD/OR

5-HG

RD/YL 11 HEATING DEVICE POWER
RD/OR 9 HEADLAMP POWER
RD/YL 3 BRAKE SWITCH POWER
RD/BR 6 START/RER SWITCH POWER
BK/YL 4 ENGINE STOP SIGNAL
WH 2 BRAKE LIGHT OUTPUT
GY 8 HEADLAMP HIGH

5-AC2

www.midwestmanuals.com

PREMIUM STEERING HARNESS

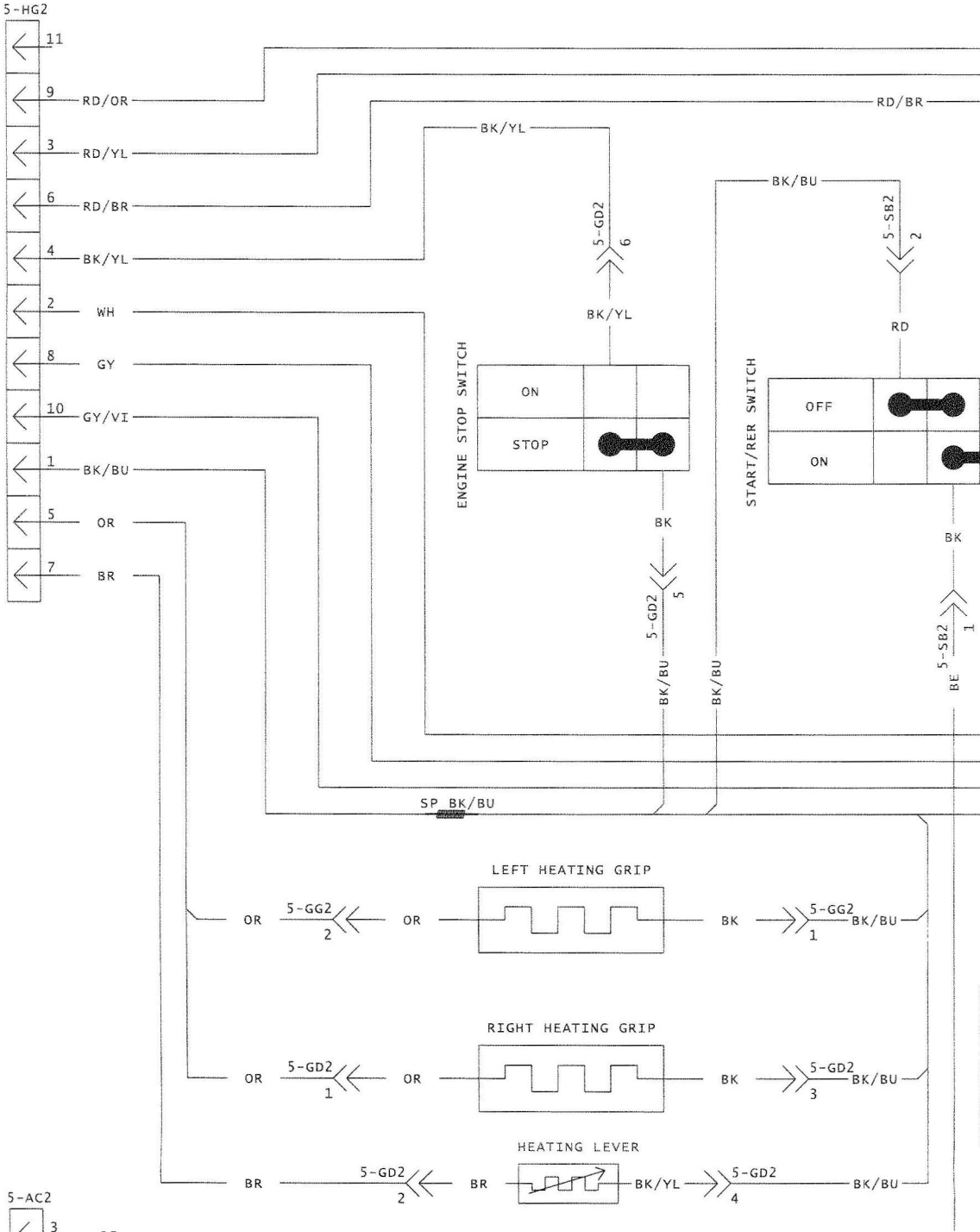

www.midwestmanuals.com

CONNECTOR LOCATION	
1	ENGINE RELATED CONNECTORS
2	LH SIDE PANEL
3	RH SIDE PANEL
4	HANDLEBAR AREA
5	BEHIND MULTI-FUNCTION GAUGE
6	REAR PART OF FRAME

COLOR CODE	
BE	BEIGE
BK	BLACK
BR	BROWN
BU	BLUE
GN	GREEN
GY	GRAY
OR	ORANGE
PK	PINK
RD	RED
VI	VIOLET
YL	YELLOW
LT	LIGHT COLOR
SP	SPLICE

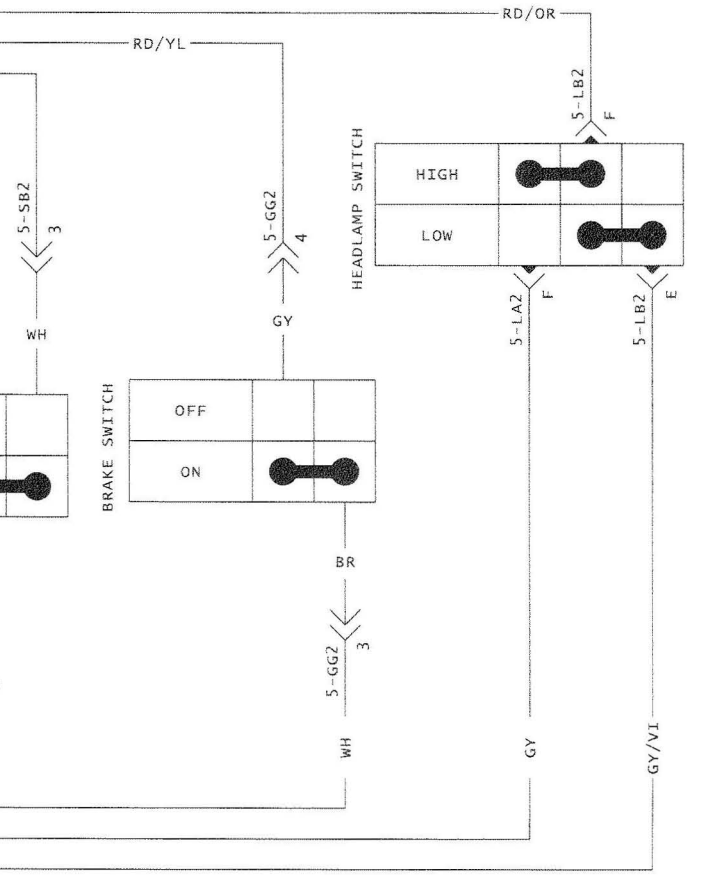

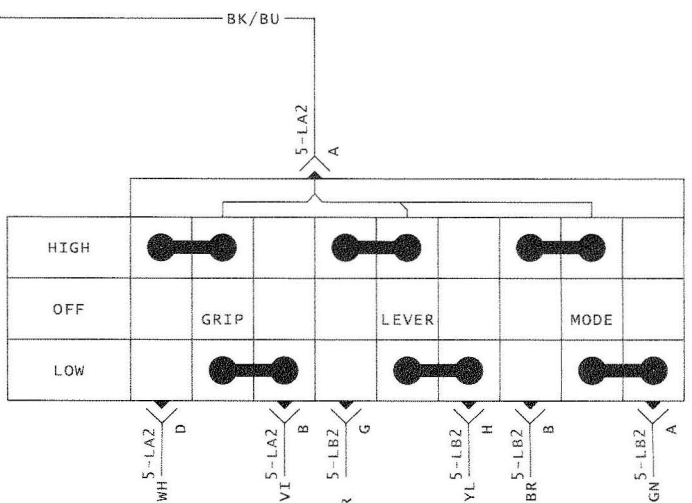

www.midwestmanuals.com

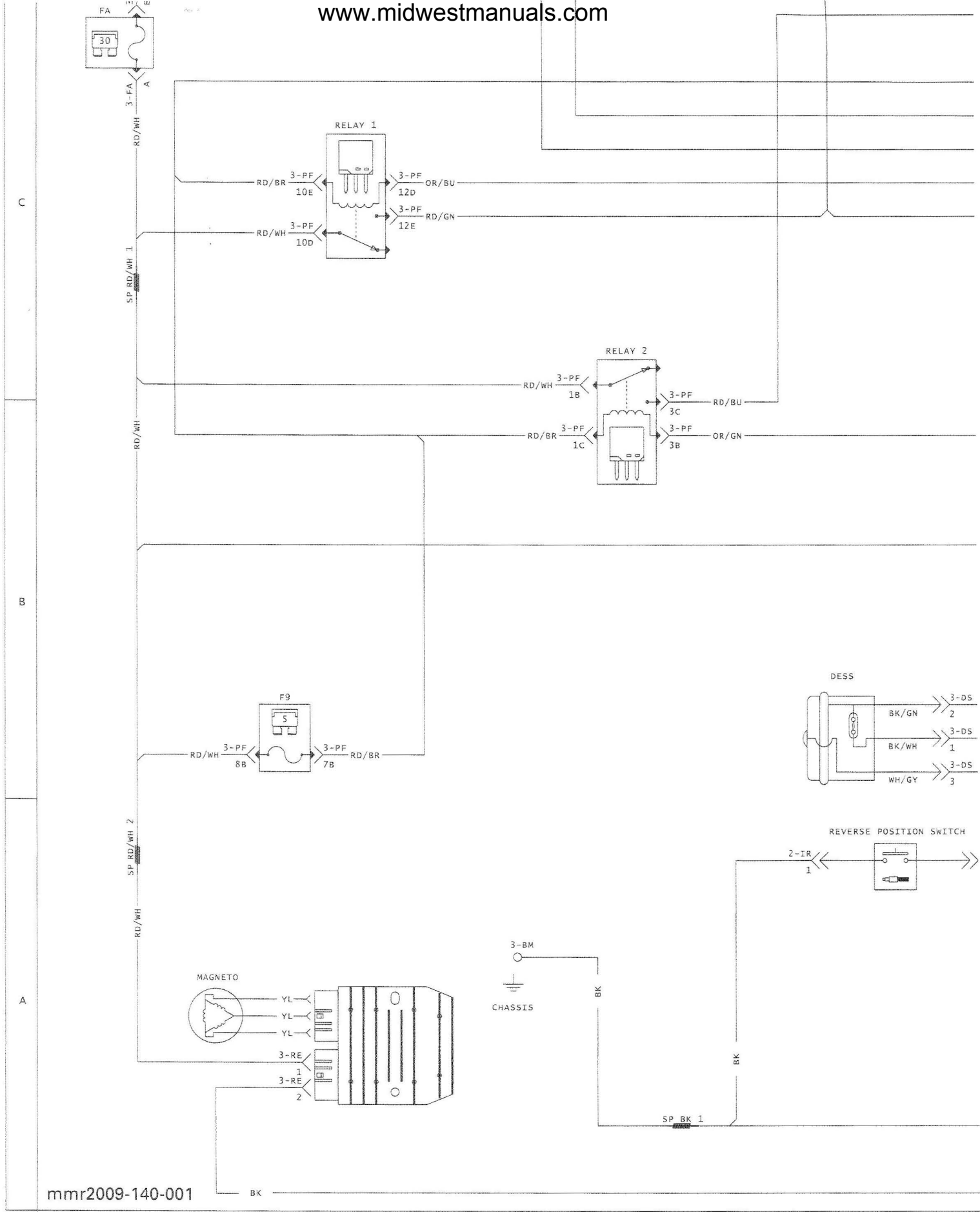

mmr2009-140-001

www.midwestmanuals.com

www.midwestmanuals.com

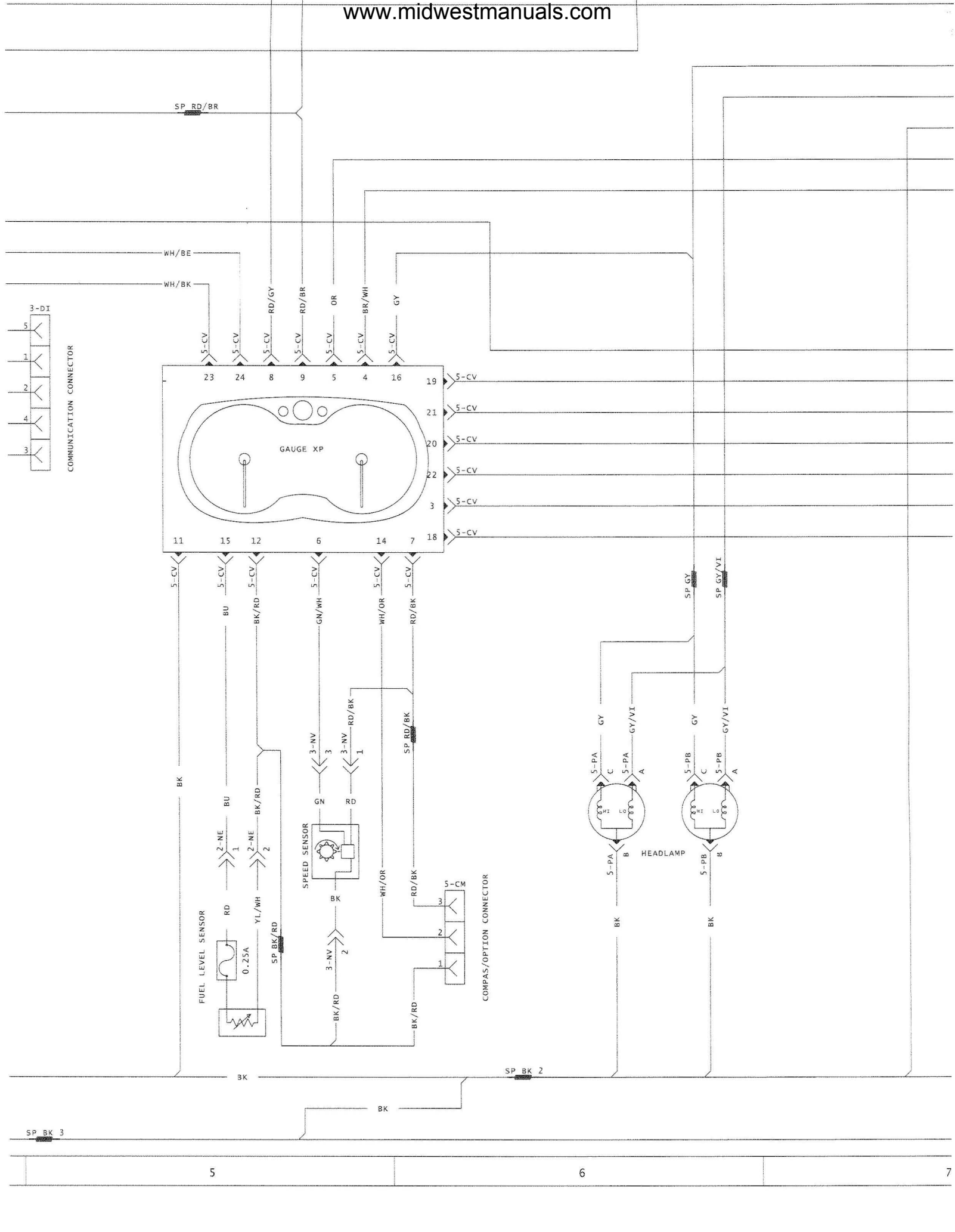

www.midwestmanuals.com

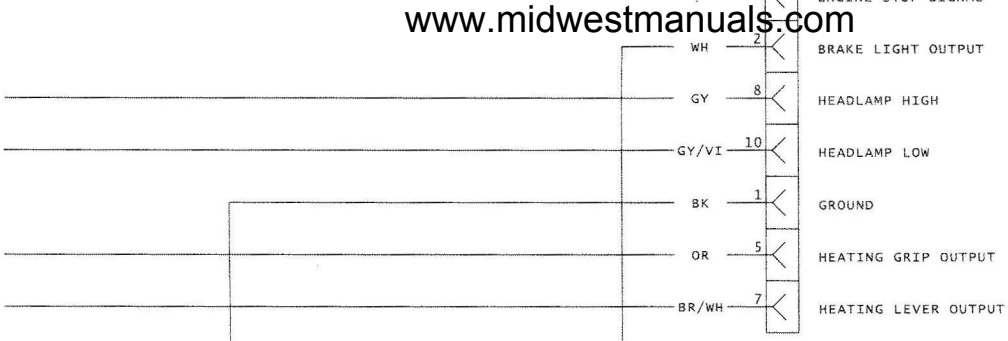

STEERING HARNESS CONNECTORS

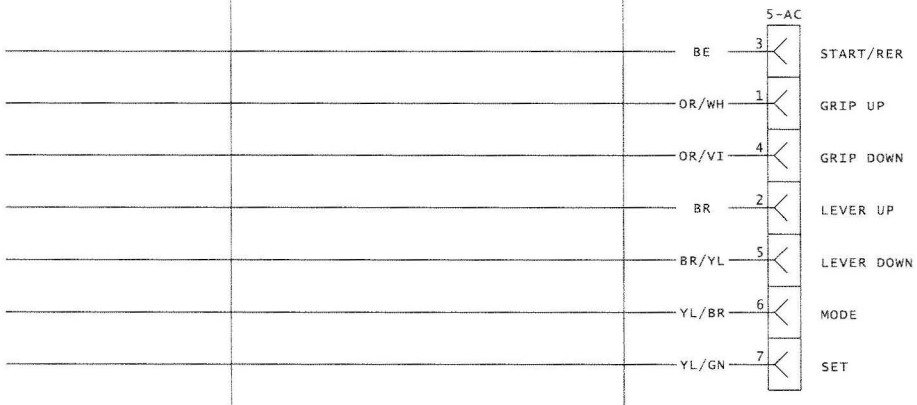

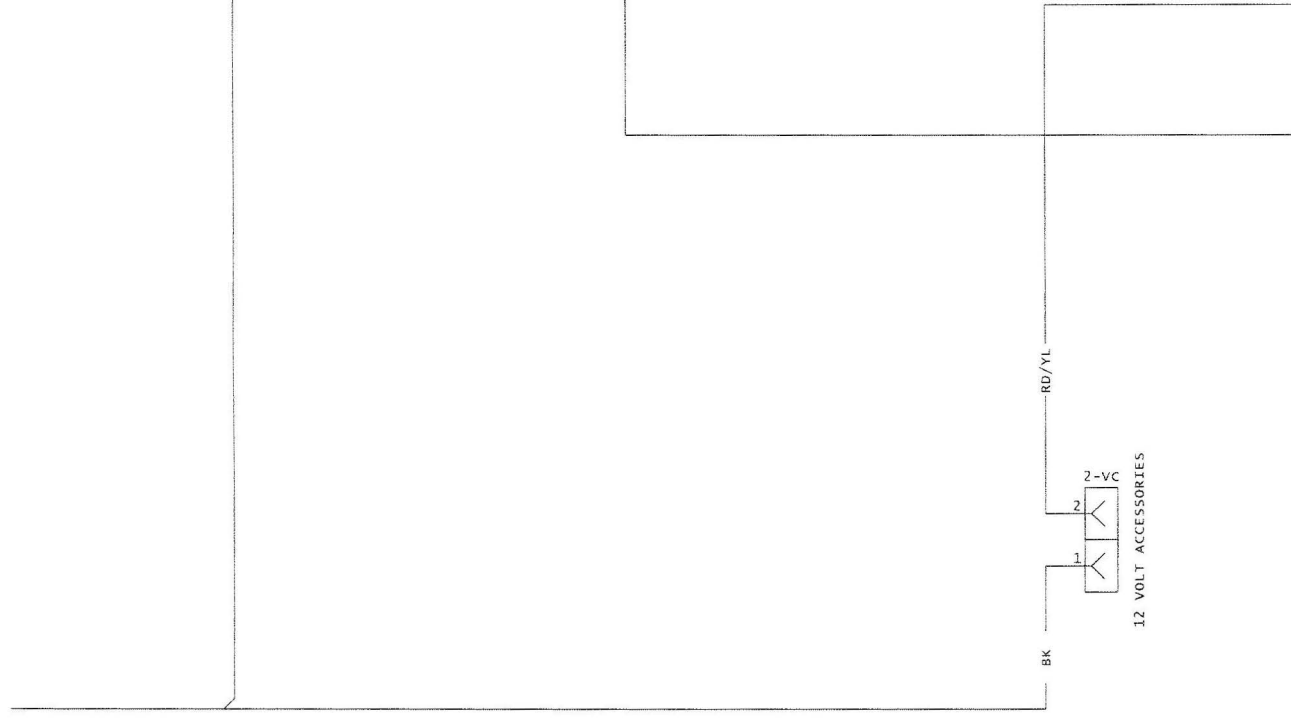

www.midwestmanuals.com

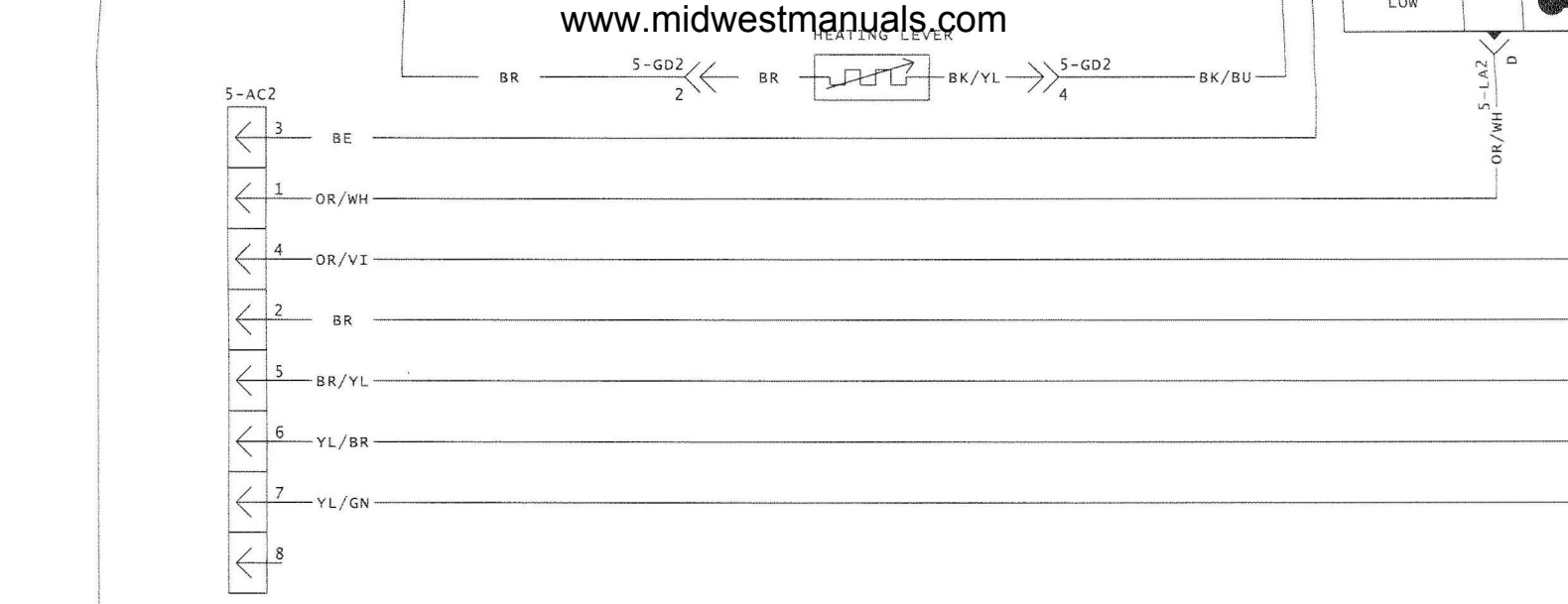

STANDARD STEERING HARNESS

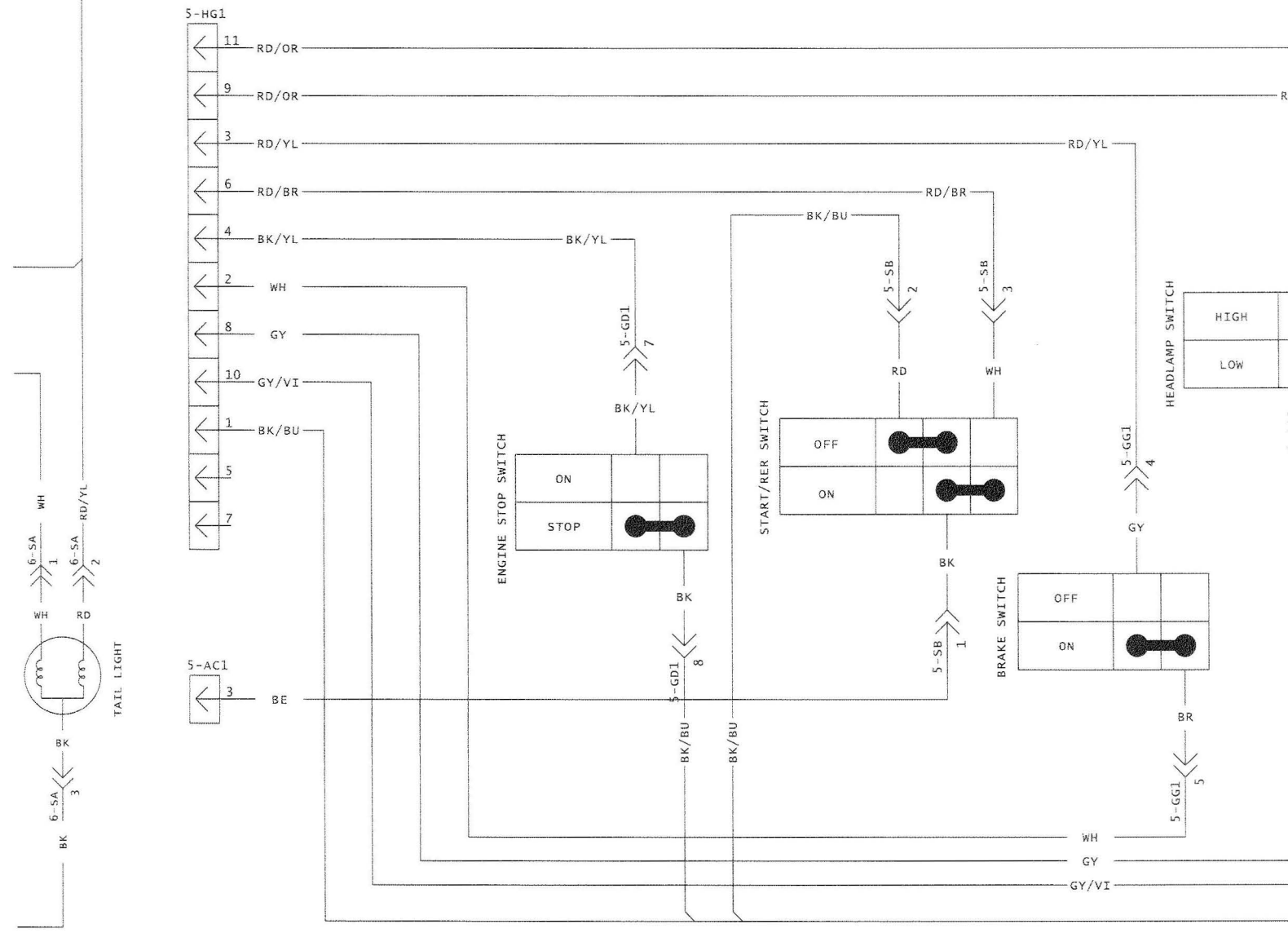

www.midwestmanuals.com

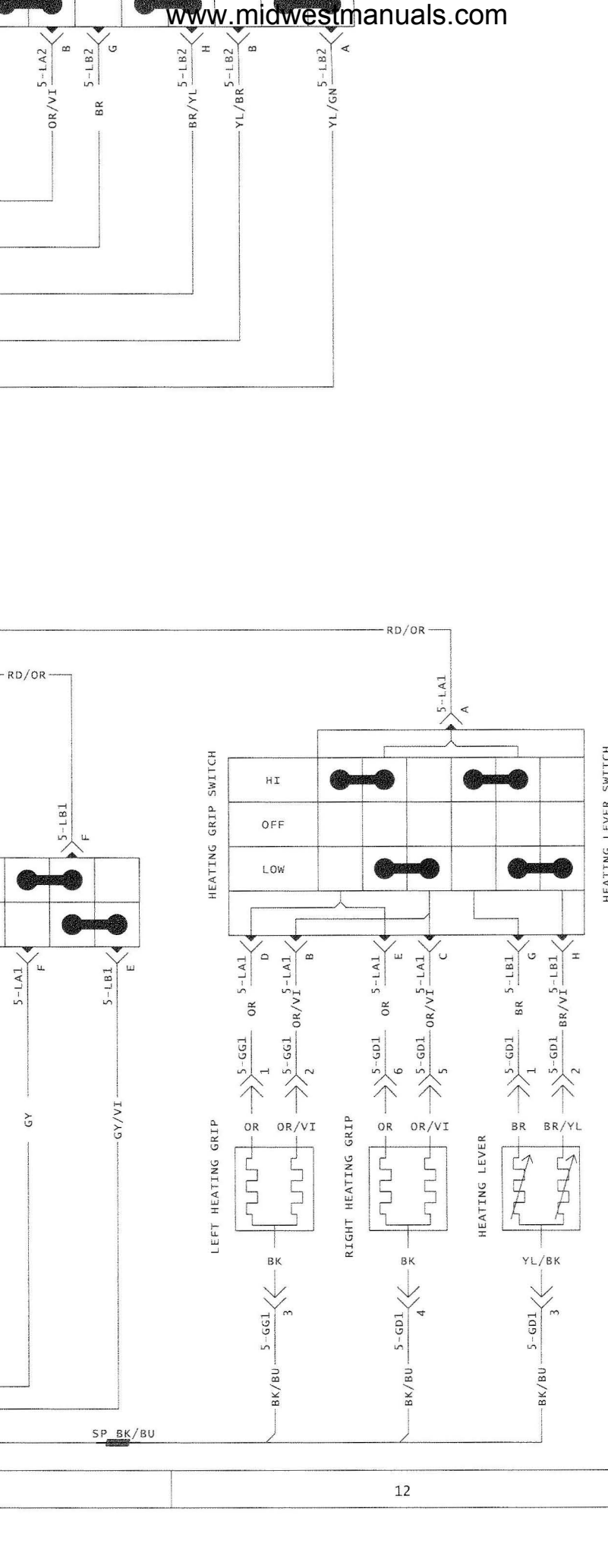

www.midwestmanuals.com

2009 REV-XR 1200 GSX/GTX

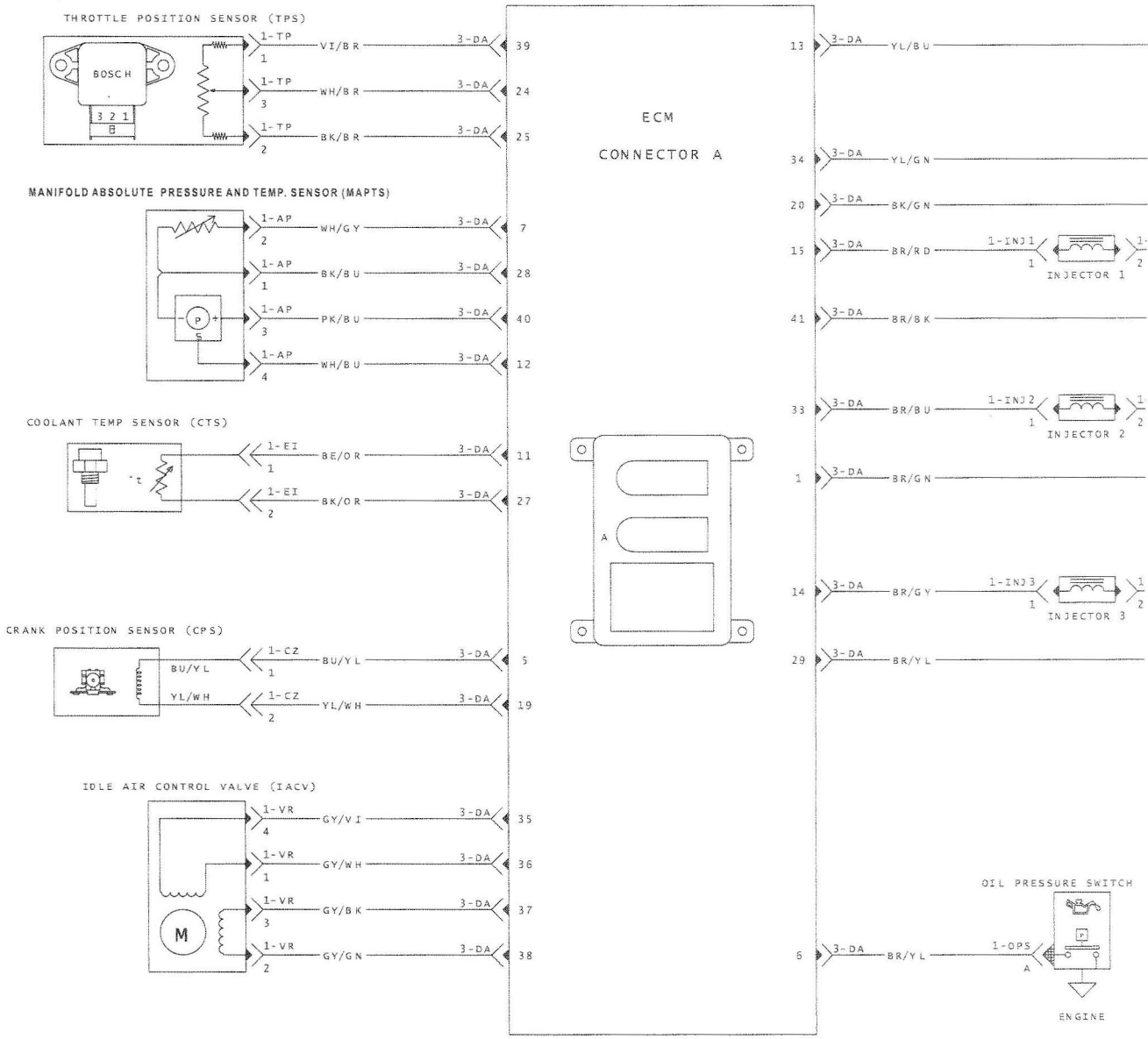

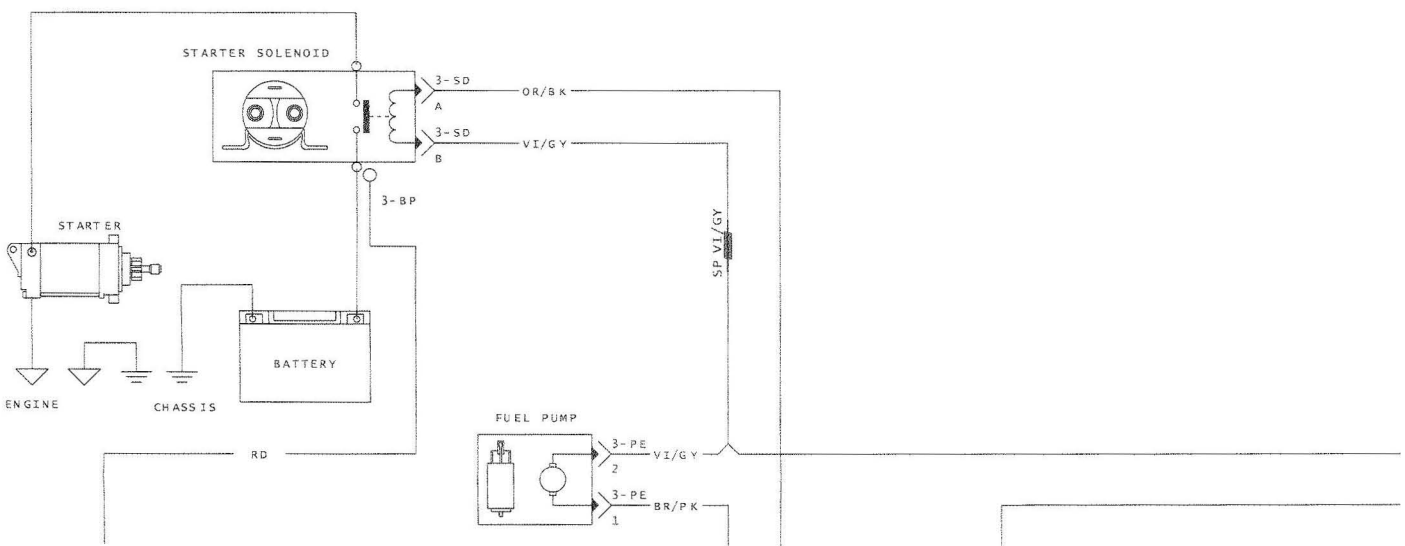

www.midwestmanuals.com

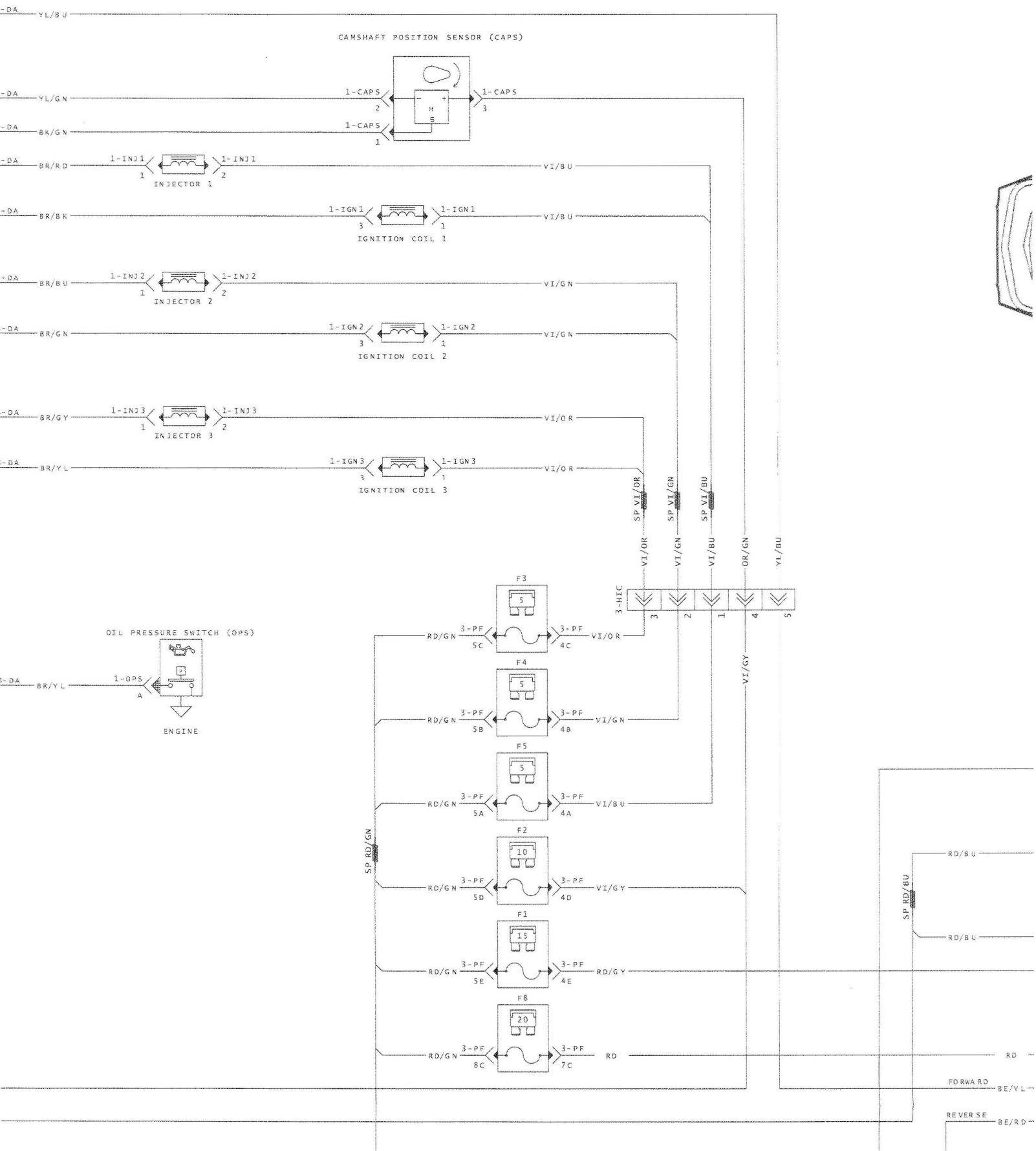

www.midwestmanuals.com

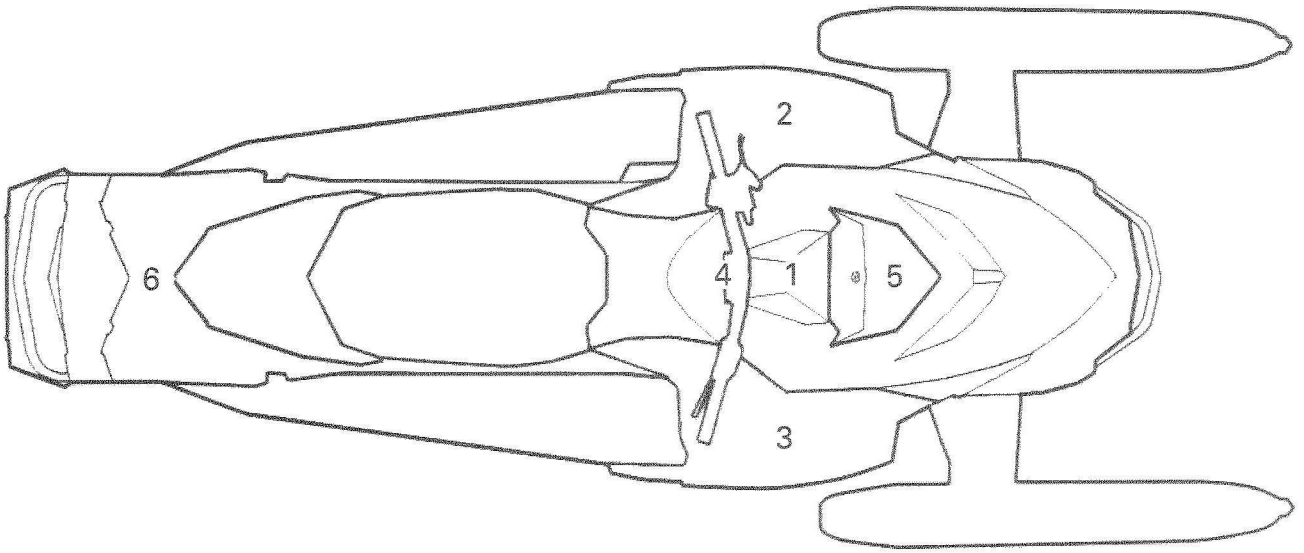

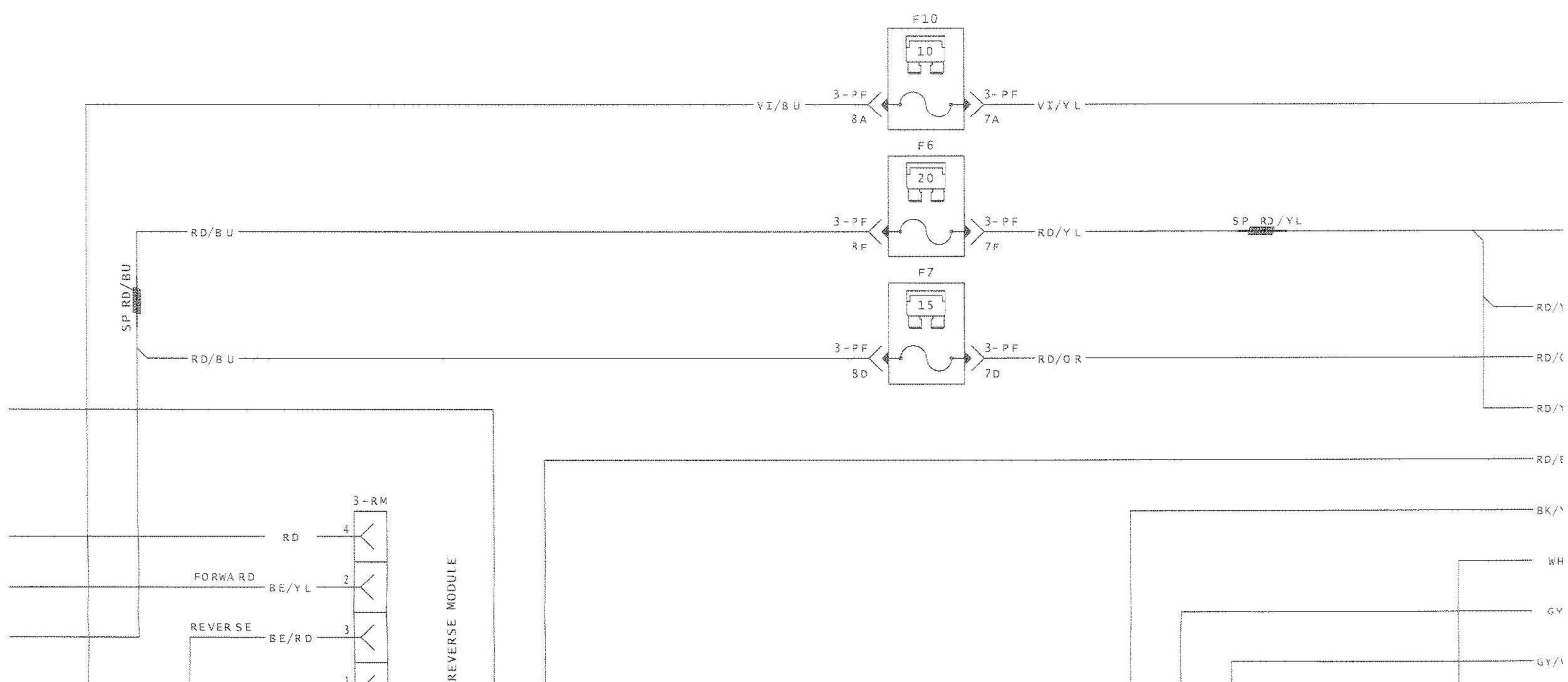

www.midwestmanuals.com

CONNECTOR LOCATION	
1	ENGINE RELATED CONNECTORS
2	LH SIDE PANEL
3	RH SIDE PANEL
4	HANDLEBAR AREA
5	BEHIND MULTI-FUNCTION GAUGE
6	REAR PART OF FRAME

COLOR CODE	
BE	BEIGE
BK	BLACK
BR	BROWN
BU	BLUE
GN	GREEN
GY	GRAY
OR	ORANGE
PK	PINK
RD	RED
VI	VIOLET
YL	YELLOW
LT	LIGHT COLOR
SP	SPLICE



www.midwestmanuals.com

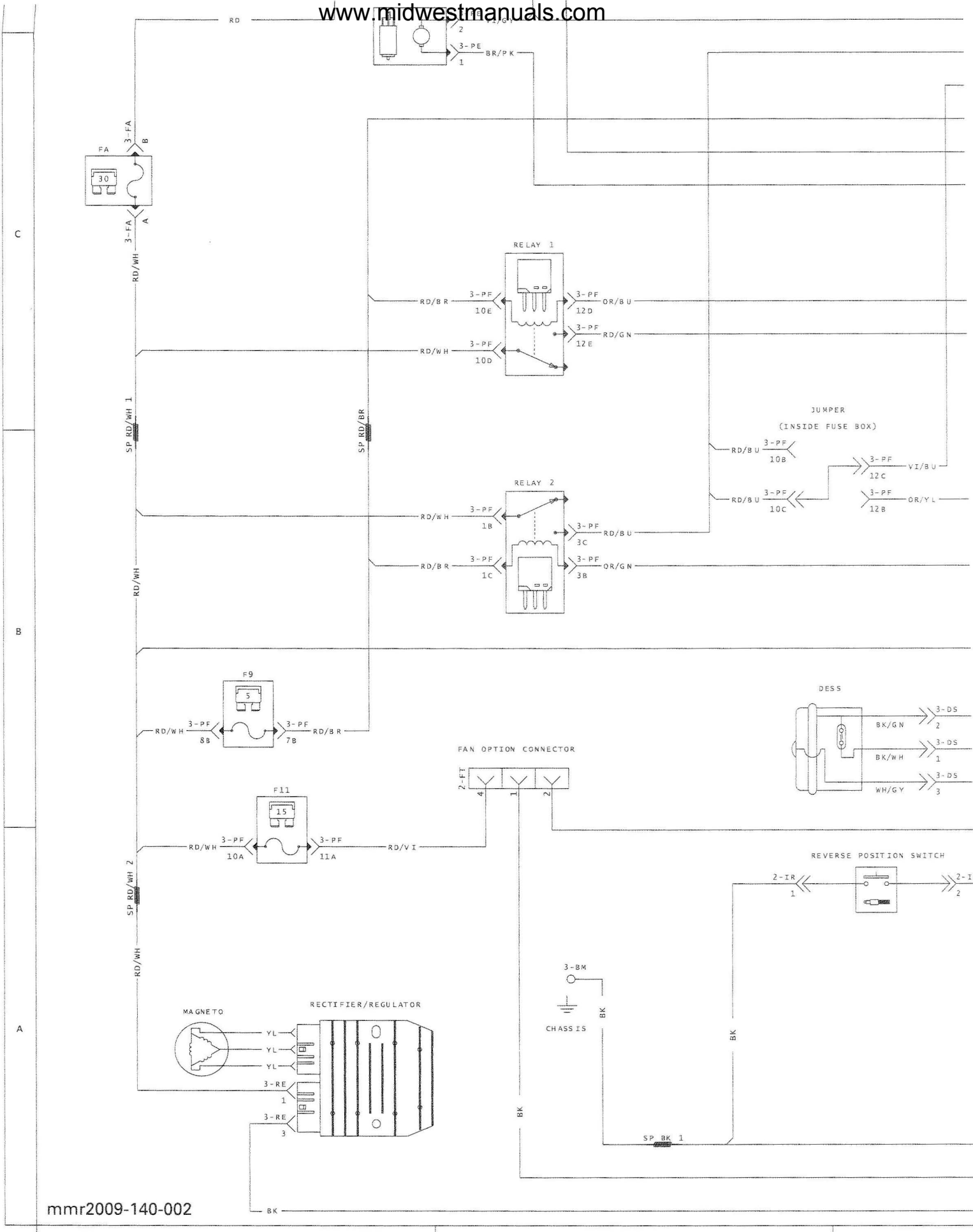

mmr2009-140-002

www.midwestmanuals.com

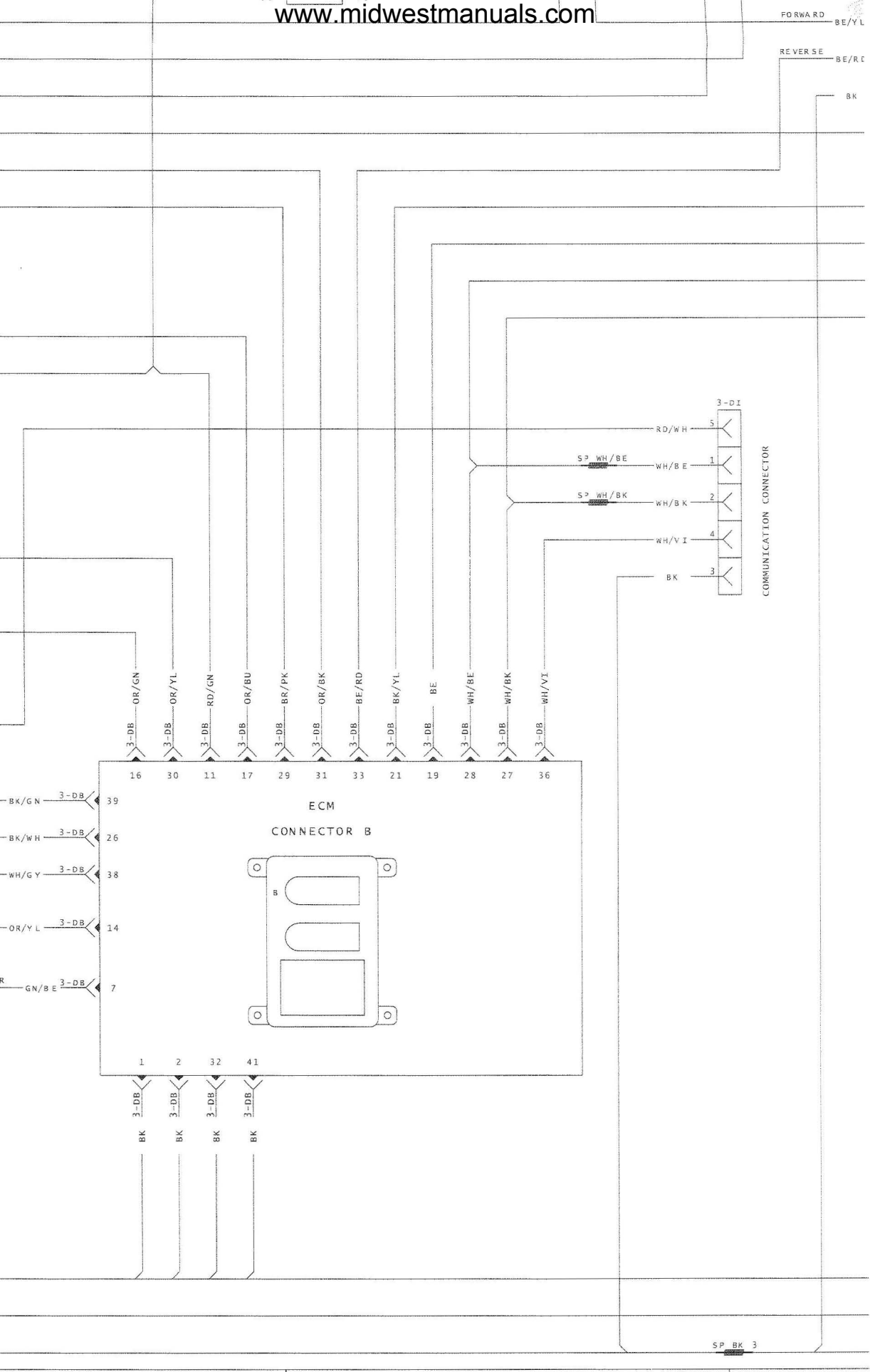

www.midwestmanuals.com

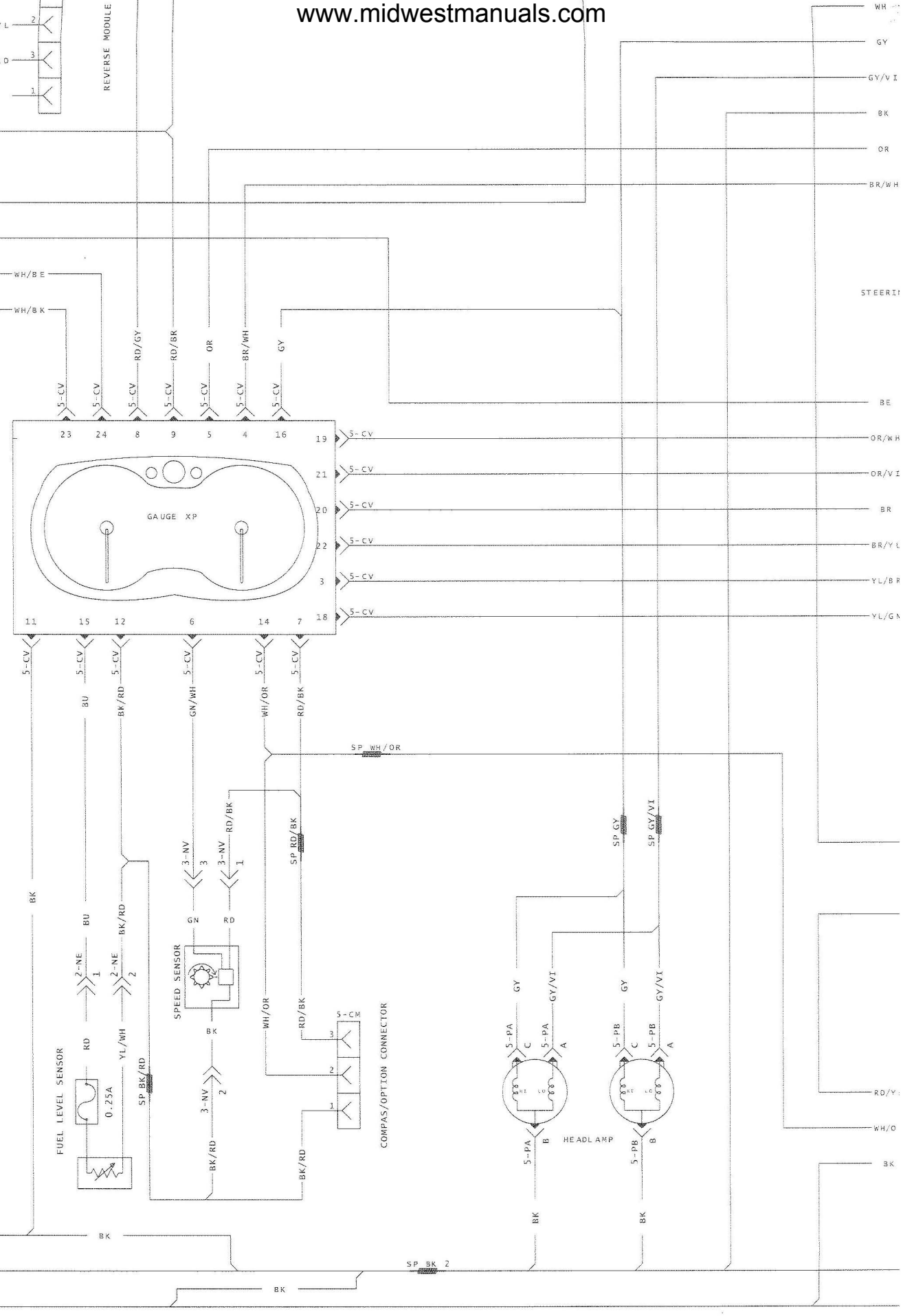

www.midwestmanuals.com

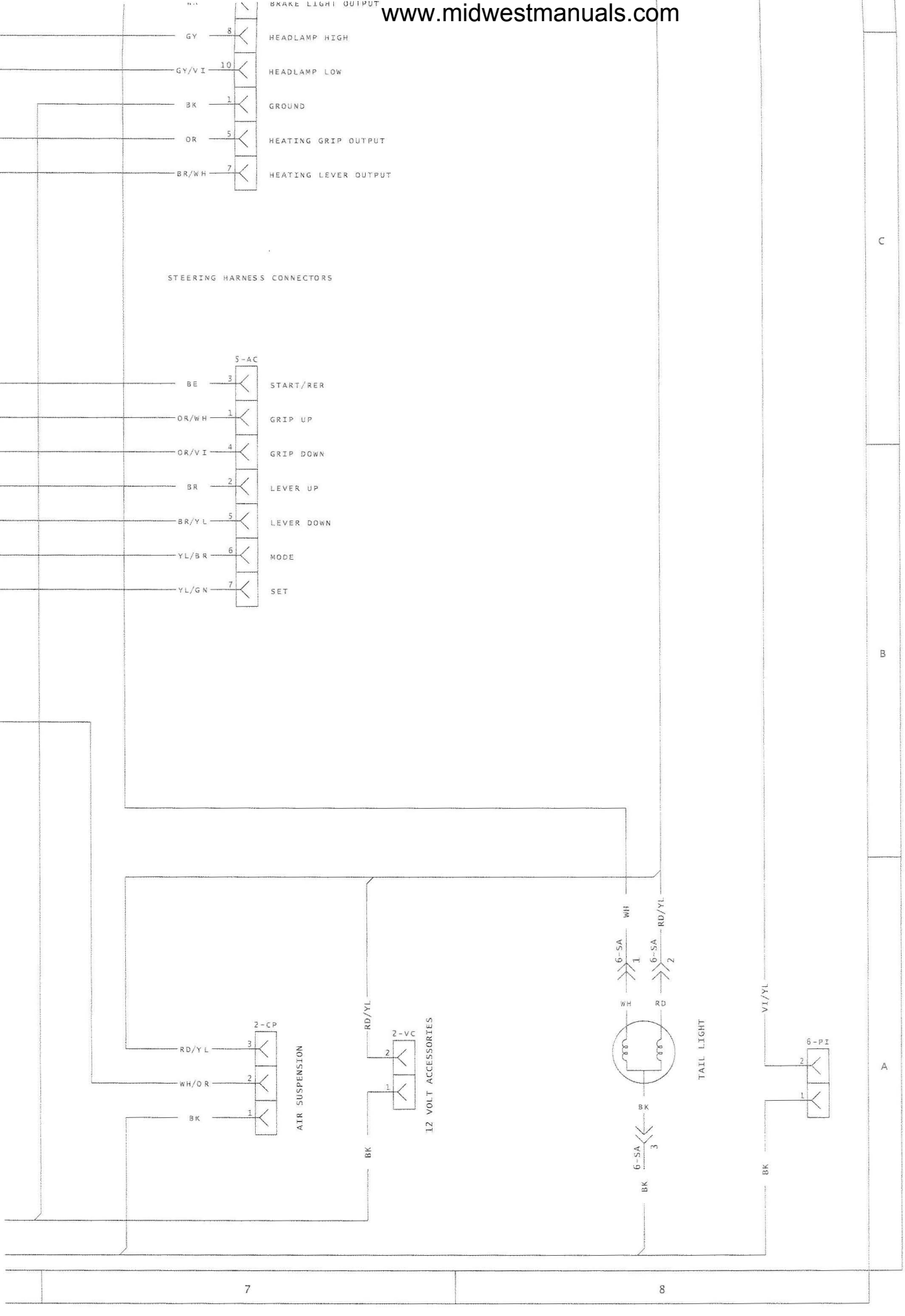

www.midwestmanuals.com

2009 REV-XR 1200 GSX/GTX

FAN HARNESS

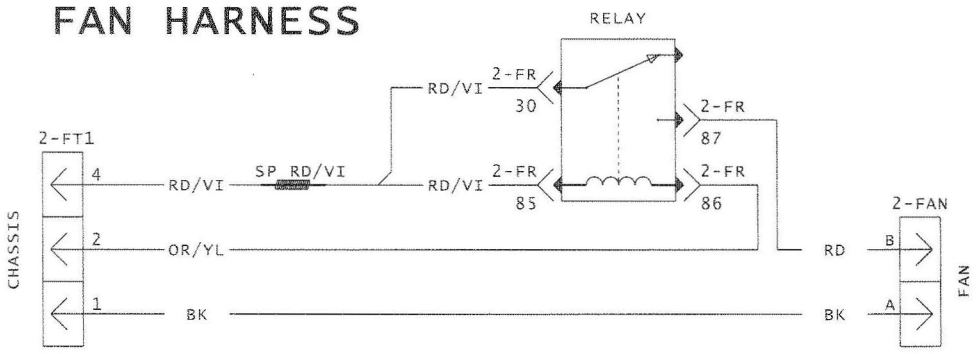

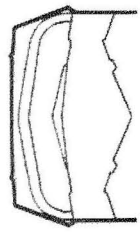

FRONT SEAT HARNESS

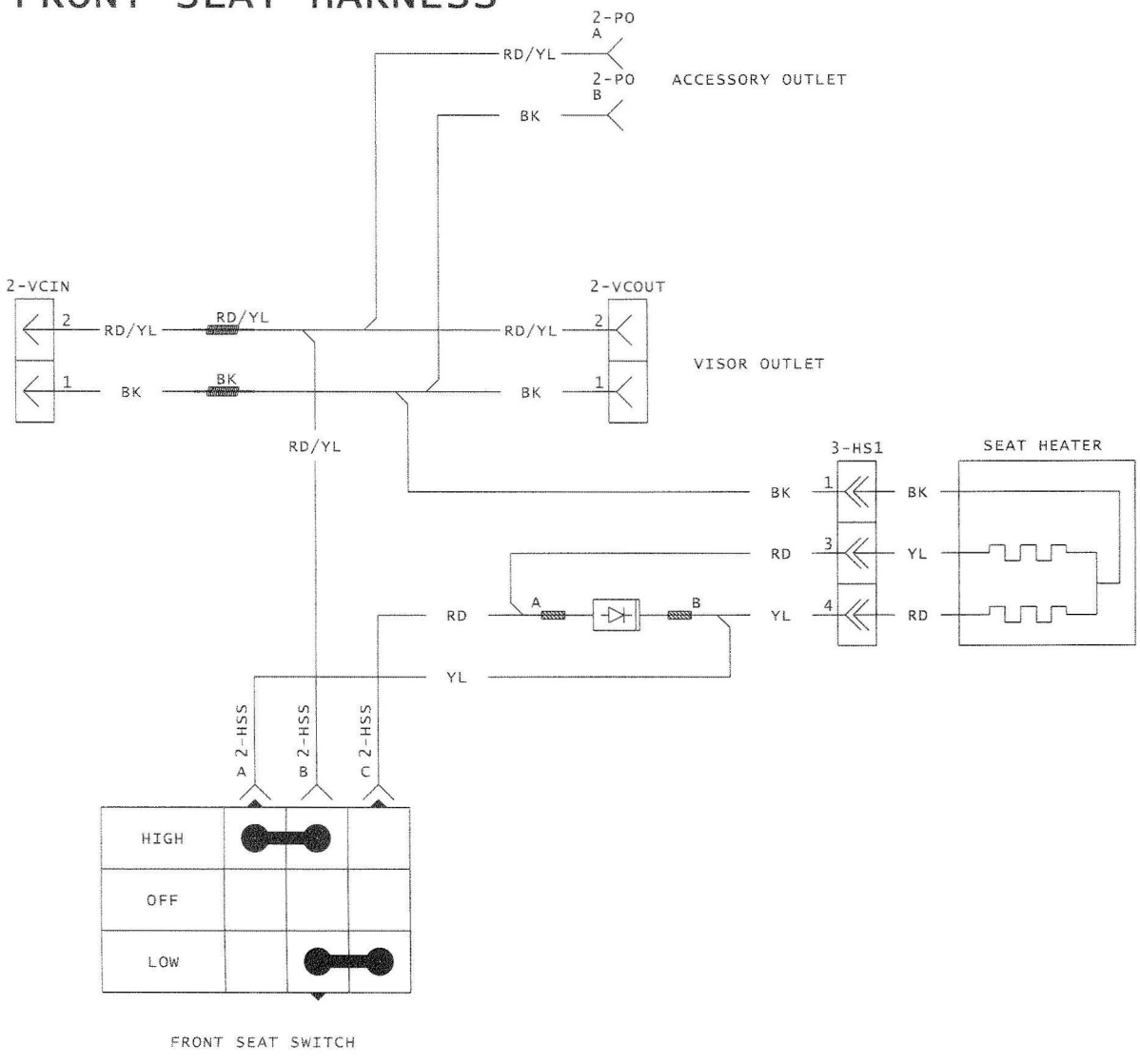

ELECTRO

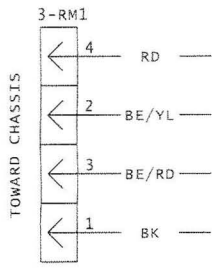

www.midwestmanuals.com

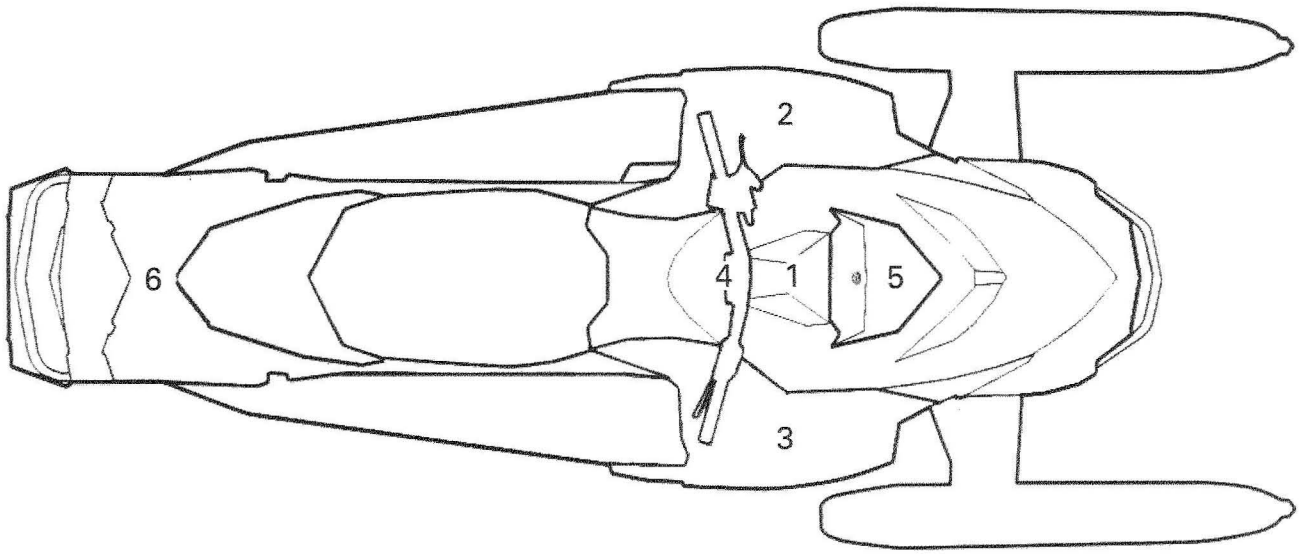

ACS SUSPENSION

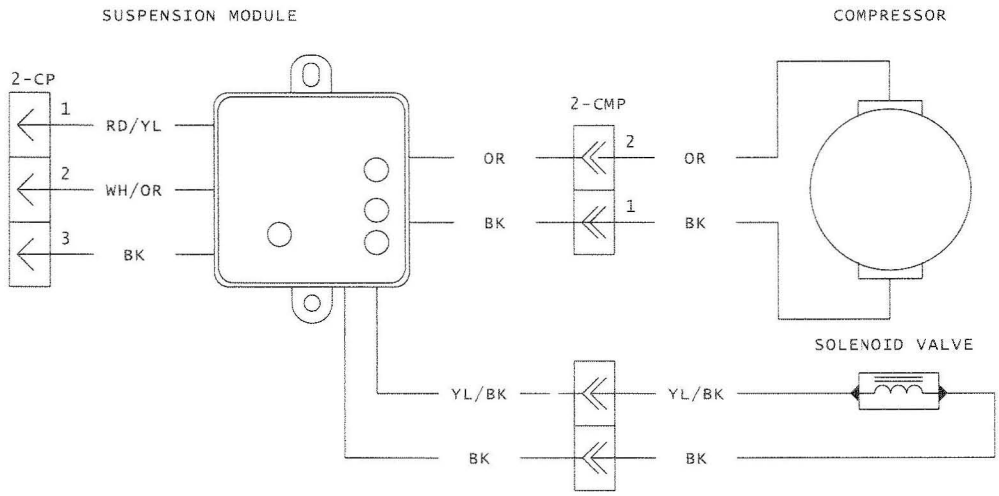

HEATER

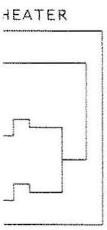

ELECTRONIC REVERSE

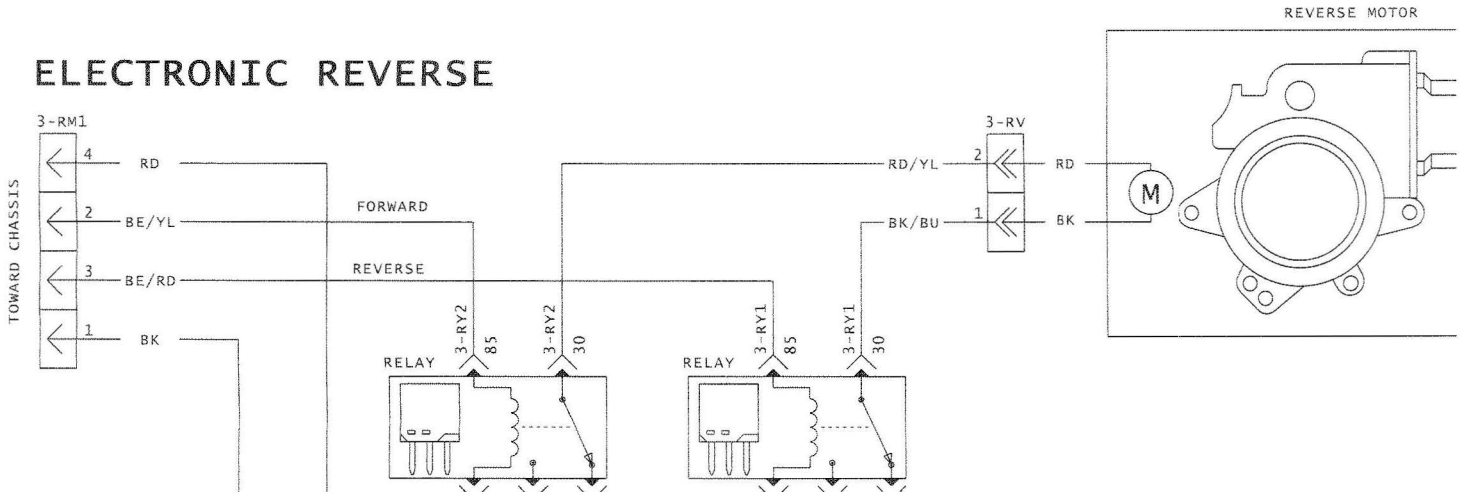

www.midwestmanuals.com

PREMIUM STEERING HARNESS

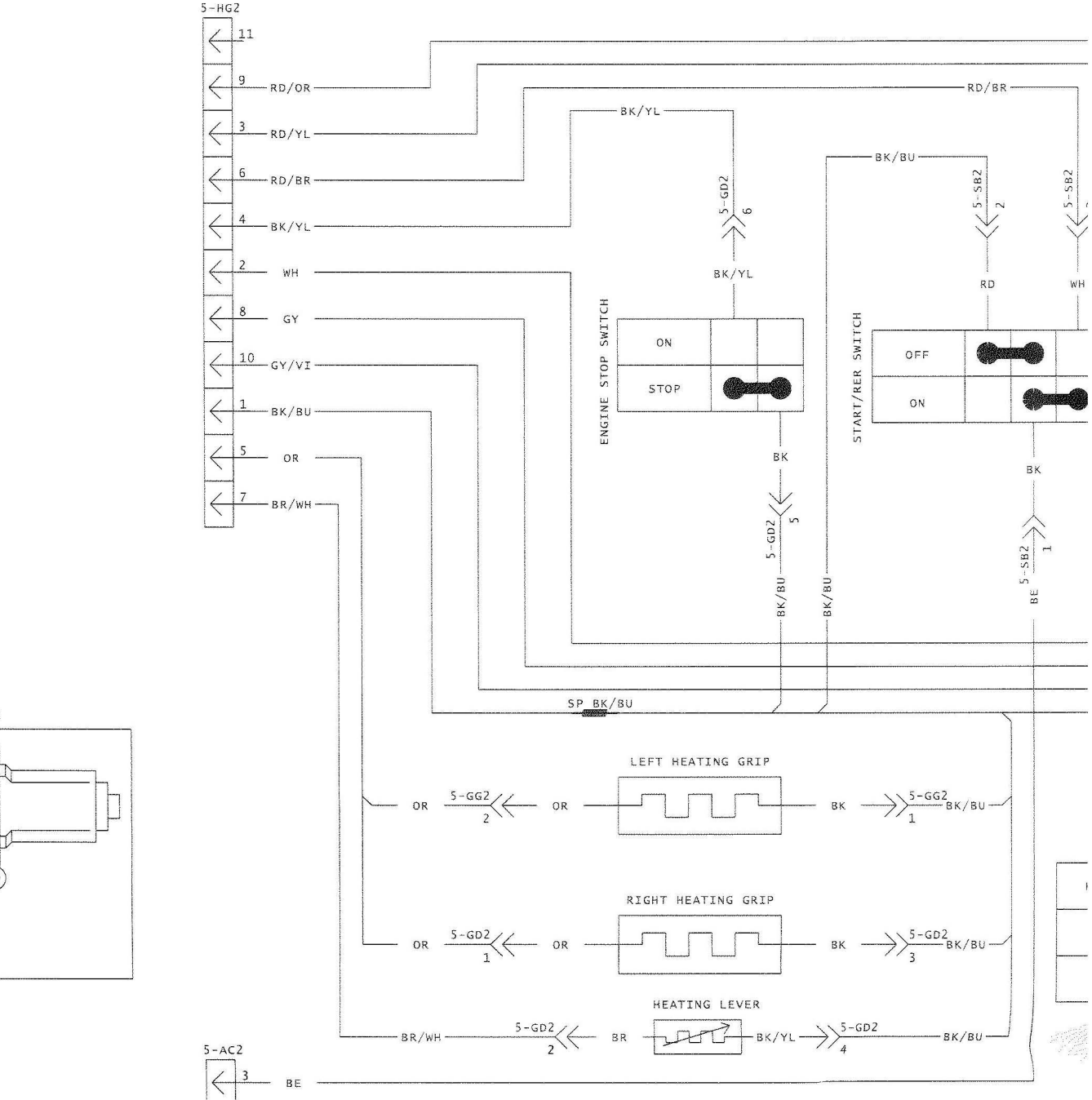

www.midwestmanuals.com

CONNECTOR LOCATION	
1	ENGINE RELATED CONNECTORS
2	LH SIDE PANEL
3	RH SIDE PANEL
4	HANDLEBAR AREA
5	BEHIND MULTI-FUNCTION GAUGE
6	REAR PART OF FRAME

COLOR CODE	
BE	BEIGE
BK	BLACK
BR	BROWN
BU	BLUE
GN	GREEN
GY	GRAY
OR	ORANGE
PK	PINK
RD	RED
VI	VIOLET
YL	YELLOW
LT	LIGHT COLOR
SP	SPLICE

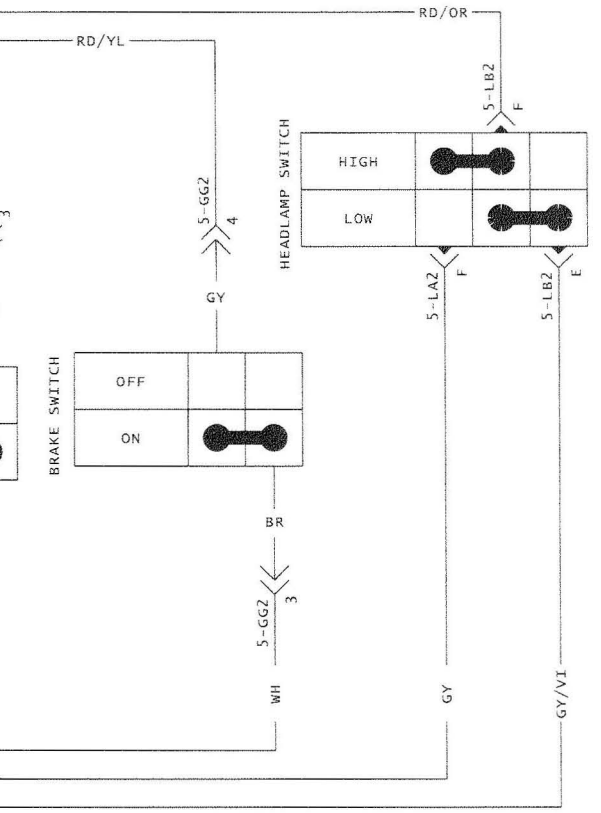

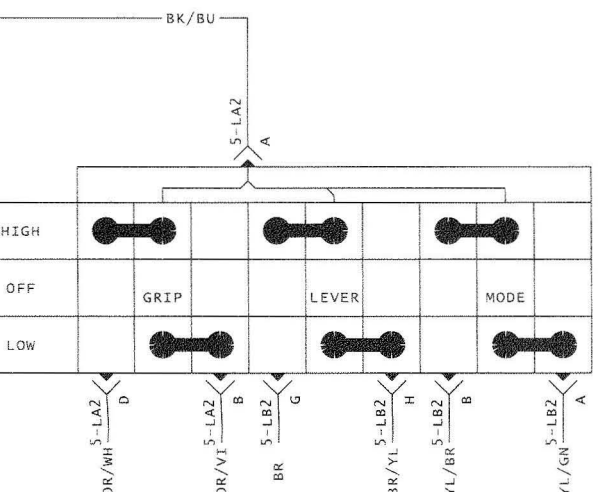

www.midwestmanuals.com

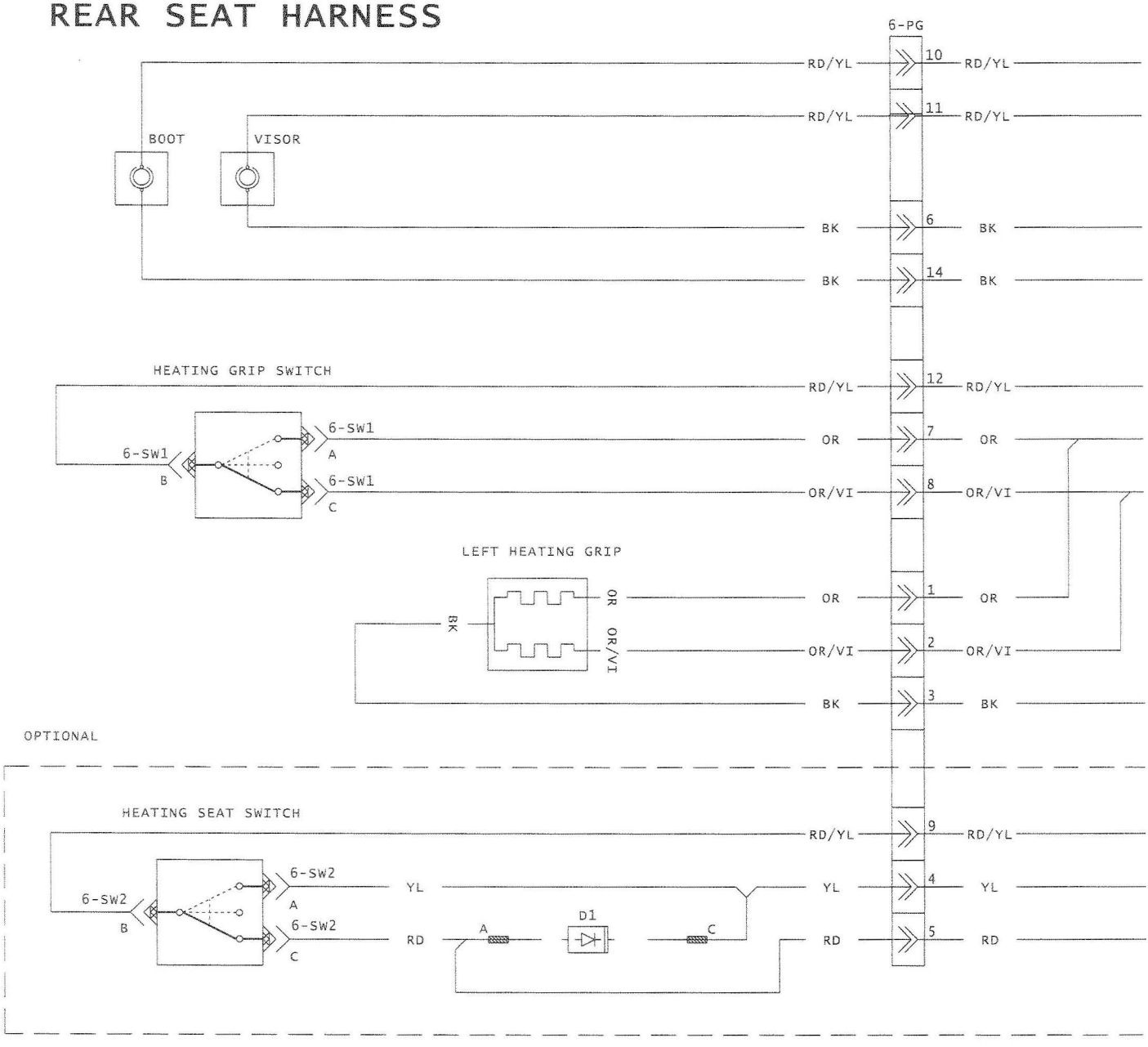

mmr2009-140-003

www.midwestmanuals.com

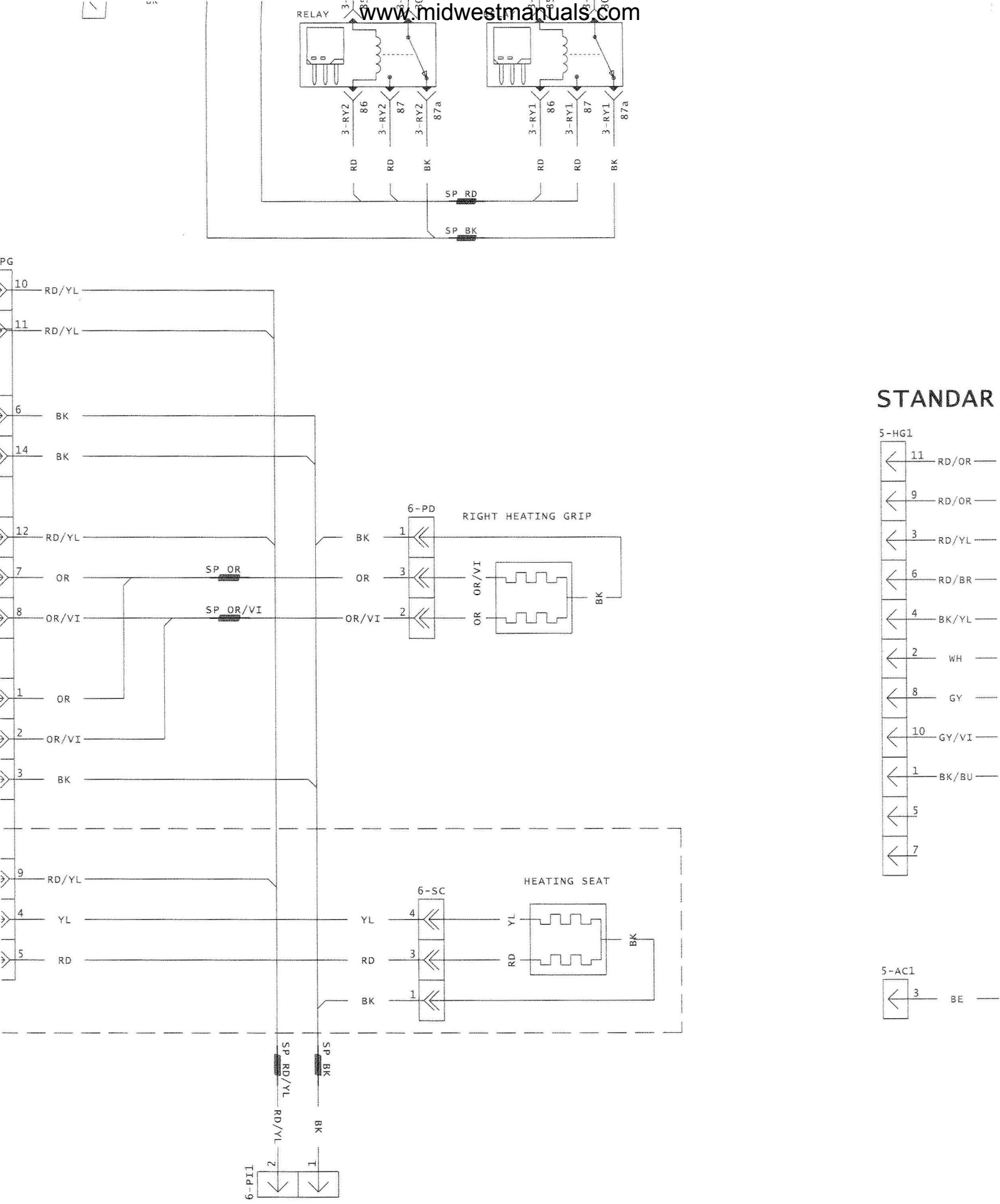

www.midwestmanuals.com

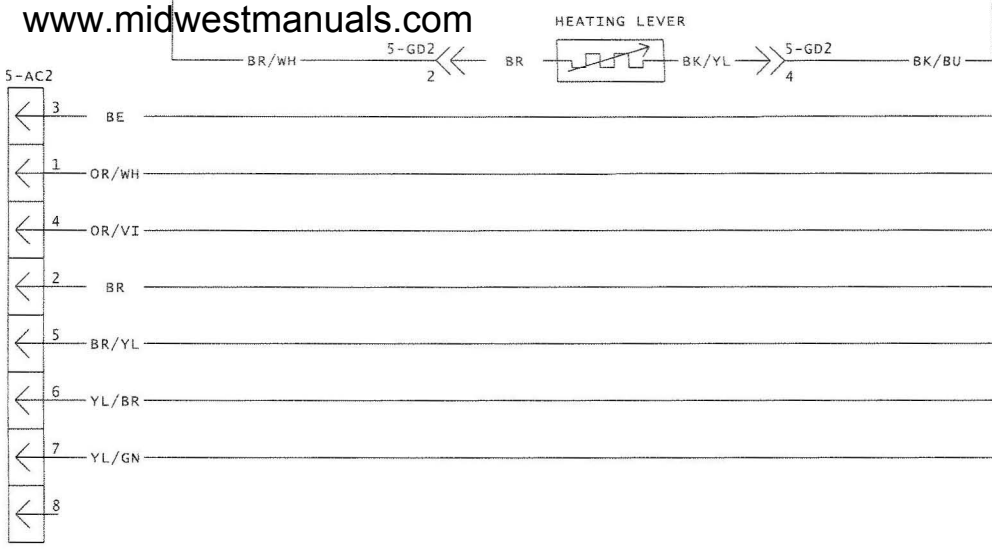

STANDARD STEERING HARNESS

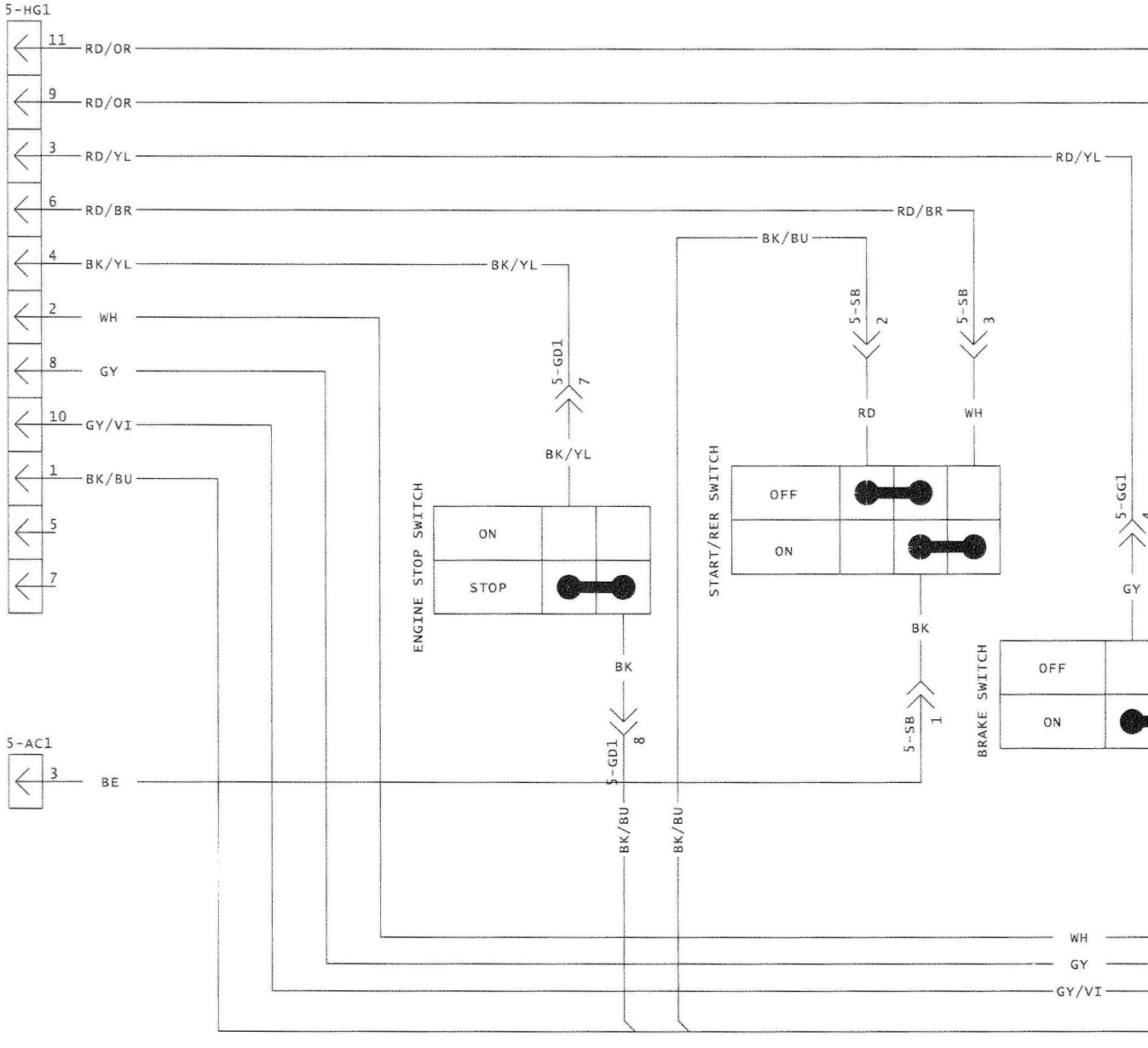

www.midwestmanuals.com

